CITY AND BOROUGH OF WRANGELL

WRANGELL WATER TREATMENT PLANT PROJECT

PROJECT MANUAL

EDA AWARD # 07 01 07472

JUNE 12, 2023

BID DOCUMENTS
TABLE OF CONTENTS

DIVISION 00 EJCDC CONTRACT DOCUMENTS and SUPPLEMENTAL CONTRACT INFORMATION
00 11 13 Advertisement (EJCDC C-111)
00 21 13 Instructions to Bidders (EJCDC C-200)
00 36 00 Subcontractor Report
00 41 13 Bid Form for Construction Contract (EJCDC C-410)
00 43 13 Bid Bond (EJCDC C-430)
00 52 13 Agreement (EJCDC C-520)
00 61 13.13 Performance Bond (EJCDC C-610)
00 61 13.16 Payment Bond (EJCDC C-615)
00 72 13 General Conditions (EJCDC C-700)
00 80 00 Supplemental Conditions (EJCDC C-800)
00 83 00 Alaska Labor Standards Reporting Prevailing Wage Rate Determination
00 84 00 Federal Labor Standards Reporting Prevailing Wage Rate Determination
EDA Contracting Provisions

DIVISION 01 GENERAL REQUIREMENTS
01 00 00 Summary of Work
01 10 01 Construction Sequence
01 20 00 Price and Payment Procedures
01 33 00 Submittal Procedures
01 45 00 Quality Control
01 60 00 Product Requirements
01 74 19 Construction Waste Management and Disposal
01 75 00 Startup of Systems and Commissioning
01 77 00 Closeout Procedures

DIVISION 02 EXISTING CONDITIONS
02 01 00 Geotechnical Report
02 41 19 Selective Demolition

DIVISION 03 CONCRETE
03 20 00 Concrete Reinforcing
03 30 00 Cast-In-Place Concrete

DIVISION 04 MASONRY
04 05 00 Common Work Results for Masonry
04 22 00 Concrete Unit Masonry

DIVISION 05 METALS
05 12 13 Pipe and Tube Railings
05 50 00 Metal Fabrications

DIVISION 07 THERMAL AND MOISTURE PROTECTION
07 11 00 Dampproofing
07 21 00 Thermal Insulation
07 26 16 Below-Grade Vapor Retarder
07 84 00 Firestopping
07 90 00 Joint Protection

DIVISION 08 DOORS AND WINDOWS

08 11 13 Hollow Metal Doors and Frames
08 30 00 Specialty Doors and Frames
08 36 13 Sectional Overhead Doors
08 51 13 Aluminum Windows
08 70 00 Hardware
08 80 00 Glazing
08 91 00 Louvers

DIVISION 09 FINISHES

09 21 16 Gypsum Board Assemblies
09 22 16-13 Nonstructural Metal Stud Framing
09 90 00 Painting and Coating

DIVISION 10 SPECIALTIES

10 28 24 Chemical Safety Equipment
10 44 00 Fire Protection Specialties

DIVISION 13 METALS

13 34 19 Metal Building Systems

DIVISION 20 BUILDING AND FACILITY SERVICES

20 05 13 Common Work Results for Facility System Piping

Pipe Class Specifications

ACI1 – Cast Iron Soil Pipe, DWV
ACI2 – Cast Iron Soil Pipe, DWV
ACS2 - Type E or S Carbon Steel, ASME Class 150
ACU1 – Hard Drawn Copper, ASME Class 125
ACU2 – Soft Annealed Copper, ASME Class 125
ACU3 – Hand Drawn Copper, ASME Class 159
ACU4 – Copper Drainage Tube, DWV
AGS3 – Galvanized Carbon Steel DWV
APE5 – PEX Tubing, 150 psig at 73°F
APV1 – PVC Pipe, DWV
APV3 – CPVC Pipe

20 05 19 Meters and Gages for Facility Service Systems
20 05 23 General Duty Valves and Accessories
20 05 29 Supports and Anchors for Facility Services Piping and Equipment
20 05 48 Vibration and Seismic Controls for Facility Services Systems
20 07 00 Mechanical Insulation

DIVISION 21 FIRE SUPPRESSION

21 13 00 Fire Suppression Sprinkler Systems

DIVISION 22 PLUMBING

22 11 16 Domestic Water Pipe
22 30 00 Plumbing Equipment
22 33 00 Domestic Water Heaters
22 40 00 Plumbing Fixtures

DIVISION 23 HEATING, VENTILATION AND AIR CONDITIONING

23 05 93 Testing, Adjusting, and Balancing for HVAC
23 31 00 HVAC Ducts and Casings
23 33 00 Air Duct Accessories
23 34 00 HVAC Fans
23 37 00 Air Outlets and Inlets
23 73 00 Central Station Air Handling Units
23 81 00 Decentralized Unitary HVAC Equipment
23 82 39 Unit Heaters

DIVISION 26 ELECTRICAL

26 00 00 Electrical Work, General
26 05 05 Electric Motors
26 05 19 Wire and Cables
26 05 23 Control Voltage Electrical Power Cables
26 05 26 Grounding and Bonding
26 05 29 Hangers and Supports for Electrical Systems
26 05 33 Electrical Raceway Systems
26 05 36 Cable Trays for Electrical Systems
26 05 43 Underground Raceway Systems
26 05 48 Seismic Control for Electrical Systems
26 05 53 Identification for Electrical Systems
26 05 73 Overcurrent Protective Device Coordination Studies
26 22 00 Dry Type Transformers
26 24 13 Switchboards
26 24 16 Panelboards
26 24 19 Motor Control Centers
26 28 16 Enclosed Switches and Circuit Breakers
26 29 13 Enclosed Controllers
26 29 23 Variable Frequency Drives
26 32 13 Diesel-Engine-Driven Generator Sets
26 36 00 Transfer Switches
26 43 13 Surge Protection for Low Voltage Electrical Power Circuits
26 51 19 Interior Lighting
26 52 13 Emergency Lighting
26 56 19 Exterior Lighting

DIVISION 31 EARTHWORK

31 10 00 Site Clearing
31 20 00 Earth Moving
31 25 00 Erosion and Sediment Control
31 30 00 Rock Excavation and Blasting
31 50 00 Excavation Support and Protection

DIVISION 33 UTILITIES

33 01 10 Disinfection of Water Utility Piping Systems
33 01 11 Disinfection of Water Storage and Equipment
33 05 05 Pressure Testing
33 05 13 Manholes & Structures
33 11 13 Public Water Utility Distribution Piping
33 31 13 Public Sanitary Utility Sewerage Piping
33 41 00 Storm Utility Drainage

DIVISION 40 PROCESS INTERCONNECTIONS

40 05 02 Piping and Equipment Identification
40 05 06 Couplings, Adapters, and Specials for Process Piping
40 05 07 Hangers and Support for Process Piping
40 05 23 Stainless Steel Process Pipe
40 05 23-43 Stainless Steel Pipe, Fittings, and Accessories for Low Pressure Air Service
40 05 31 Polyvinyl Chloride Process Pipe
40 05 41 Copper Pipe and Tubing
40 11 09 Interior Piping
40 11 11 Valves and Actuators
40 11 11-01 Valve Index
40 41 13 Process Piping Heat Tracing
40 61 13 Process Control System General Provisions
40 61 96 Process Control Narratives
40 62 00 Computer System Hardware and Ancillaries
40 63 43 Programmable Logic Controllers
40 67 00 Control System Equipment Panels and Racks
40 68 13 Process Control Software
40 70 00-00 Instrumentation for Process Systems
40 70 00-13 Instrument Index
40 75 15 Network and Communications Equipment

DIVISION 43 PROCESS EQUIPMENT

43 11 33 Positive Displacement Blowers
43 20 01 Inline Static Mixers
43 23 01 High Service Pumps
43 30 01 Submersible Pump and Jet Mixing System

DIVISION 46 WATER AND WASTEWATER EQUIPMENT

46 07 13-13 Packaged Water Treatment Plant Equipment Installation
46 21 10 Packaged Water Treatment Plant Equipment
46 33 13 Sodium Hypochlorite Generating Equipment
46 33 44 Peristaltic Metering Pumps Skids
46 33 83 Liquid Chemical Feed Accessories and Safety Equipment

SUPPLEMENTAL ATTACHMENTS

AWC Draft Installation Instructions
AWC Shop Drawings and P&IDs
Engineering Drawings

SECTION 00 11 13
ADVERTISEMENT FOR BIDS

CITY AND BOROUGH OF WRANGELL
WRANGELL, ALASKA

WRANGELL WATER TREATMENT PLANT PROJECT

General Notice

The City and Borough of Wrangell (Owner) is requesting Bids for the construction of the following Project:

Wrangell Water Treatment Plant

Separate sealed Bids for the construction of the Project will be received by the **City and Borough of Wrangell, Post Office Box 531, Wrangell, AK 99929, located at the Borough Clerk's office, 205 Brueger Street, Wrangell, Alaska 99929**, until **July 19, 2023** at **2:00 PM** local time. At that time the Bids received will be publicly opened and read. **Each bid must be submitted in an envelope and plainly marked on the outside of the envelope as "Bid for City and Borough of Wrangell, Wrangell Water Treatment Plant Project".**

The Project includes the following Work:

> Modifications to the existing water treatment plant and construction of a new water treatment plant building. Modifications to the existing treatment plant include conversion of the slow sand filters into a chlorine contact chamber, conversion of the roughing filters into a backwash equalization basin, demolition of an existing ozonation system, and conversion of the existing administration building into a support building. The new water treatment plant building will house a Multimedia and Dissolved Air Flotation Treatment System capable of treating 2.26 Million Gallons Per Day (MGD).

Bids will be received for a single prime Contract. Bids shall be developed as indicated in the Bid Form, Section 00 41 13.

Obtaining the Bidding Documents

Information and Bidding Documents for the Project can be found at the following designated website:

https://www.wrangell.com/rfps

Bidding Documents may be downloaded from the designated website. Prospective Bidders are urged to faister with DOWL as a plan holder, even if Bidding Documents are obtained from a plan room or source other than the designated website in either electronic or paper format. The designated website will be updated periodically with addenda, lists of registered plan holders, reports, and other information relevant to submitting a Bid for the Project. All official notifications, addenda, and other Bidding Documents will be offered only through the designated website.

The Issuing Office for the Bidding Documents is:

City and Borough of Wrangell (City Hall)
205 Brueger Street
Wrangell, Alaska 99929

Prospective Bidders may examine the Bidding Documents at the Issuing Office on Monday through Friday between the hours of **9:00 AM and 4:00 PM**. Partial sets of Bidding Documents will not be available from the Issuing Office. Neither Owner nor Engineer will be responsible for full or partial sets of Bidding Documents, including addenda, if any, obtained from sources other than the Issuing Office. The designated website is the online location of all official bid documents.

Bidding Documents also may be examined at **The Plans Room LLC (Anchorage, Alaska) and AGC/The Plans Room (Anchorage and Fairbanks, Alaska).**

Package Treatment Plant Equipment Pre-Procurement

The owner underwent a pre-procurement selection for a vendor to provide the package treatment plant equipment. The selected vendor is AWC, Inc. AWC, Inc. has prepared project shop drawings which can be viewed in the supplemental information section along with the package treatment plant equipment specification. The owner and AWC, Inc. negotiated a contract price for the furnishing and installation of the equipment. This negotiated price is included in the proposed Bid Form, which will be used to pay the General Contractor for the services provided by AWC, Inc. The General Contractor will contract with AWC, Inc. for these services.

Pre-bid Conference

A pre-bid conference will be held in Wrangell on **June 27, 2023 at 11:30 am** starting at City Hall at the 205 Brueger Street Wrangell, AK 99929. Bidders are strongly encouraged to attend to mitigate risks associated with not understanding the site constraints and local conditions. Bidders assume full responsibility and liability for their understanding of these conditions.

Instructions to Bidders

For all further requirements regarding bid submittal, qualifications, procedures, and contract award, refer to the Instructions to Bidders that are included in the Bidding Documents.

Build America, Buy America Act

This project is subject to the Build America, Buy America Act (BABAA) requirements under Title IX of the Infrastructure Investment and Jobs Act (IIJA), Pub. L. 117-58, §§ 70901-70953. Absent an approved waiver, all iron, steel, manufactured products, and construction materials used in this project must be produced in the United States. The following waivers apply to this Contract: BABAA De Minimis, Small Grants, and Minor Components

This Advertisement is issued by:

Owner: City and Borough of Wrangell
By: DOWL, Chase Nelson, PE
Title: Project Manager
Date: June 12, 2023

All questions should be submitted in writing to **Brita Mjos at DOWL at bmjos@dowl.com** by July 10, 2023.

END OF SECTION

SECTION 00 21 13

INSTRUCTIONS TO BIDDERS FOR CONSTRUCTION CONTRACT

TABLE OF CONTENTS

Page

Article 1— Defined Terms 1
Article 2— Bidding Documents 1
Article 3— Qualifications of Bidders 2
Article 4— Pre-Bid Conference 3
Article 5— Site and Other Areas; Existing Site Conditions; Examination of Site; Owner's Safety Program; Other Work at the Site 3
Article 6— Bidder's Representations and Certifications 5
Article 7— Interpretations and Addenda 5
Article 8— Bid Security 5
Article 9— Contract Times 6
Article 10— Substitute and "Or Equal" Items 6
Article 11— Subcontractors, Suppliers, and Others 6
Article 12— Preparation of Bid 7
Article 13— Basis of Bid 8
Article 14— Submittal of Bid 9
Article 15— Modification and Withdrawal of Bid 9
Article 16— Opening of Bids 9
Article 17— Bids to Remain Subject to Acceptance 9
Article 18— Evaluation of Bids and Award of Contract 10
Article 19— Bonds and Insurance 10
Article 20— Signing of Agreement 11
Article 21— Sales and Use Taxes 11
Article 22— Contracts to Be Assigned 11
Article 23— FEDERAL REQUIREMENTS 11

EJCDC® C-200, Instructions to Bidders for Construction Contract.
Copyright© 2018 National Society of Professional Engineers, American Council of Engineering Companies, and American Society of Civil Engineers. All rights reserved.

ARTICLE 1—DEFINED TERMS

1.01 Terms used in these Instructions to Bidders have the meanings indicated in the General Conditions and Supplementary Conditions. Additional terms used in these Instructions to Bidders have the meanings indicated below:

A. *Issuing Office*—The office from which the Bidding Documents are to be issued, and which registers plan holders.

B. *Domestic Preference* – All Iron and Steel Products, Manufactured Products, and Construction Materials used in this project must comply with the Build America, Buy America Act (BABAA) requirements mandated by Title IX of the Infrastructure Investment and Jobs Act (IIJA), Pub. L. 117-58, §§ 70901-70953.

ARTICLE 2—BIDDING DOCUMENTS

2.01 Bidder shall obtain a complete set of Bidding Requirements and proposed Contract Documents (together, the Bidding Documents). See the Agreement for a list of the Contract Documents. It is Bidder's responsibility to determine that it is using a complete set of documents in the preparation of a Bid. Bidder assumes sole responsibility for errors or misinterpretations resulting from the use of incomplete documents, by Bidder itself or by its prospective Subcontractors and Suppliers.

2.02 Bidding Documents are made available for the sole purpose of obtaining Bids for completion of the Project and permission to download or distribution of the Bidding Documents does not confer a license or grant permission or authorization for any other use. Authorization to download documents, or other distribution, includes the right for plan holders to print documents solely for their use, and the use of their prospective Subcontractors and Suppliers, provided the plan holder pays all costs associated with printing or reproduction. Printed documents may not be re-sold under any circumstances.

2.03 Owner has established a Bidding Documents Website as indicated in the Advertisement or invitation to bid. Owner recommends that Bidder register as a plan holder with the Issuing Office at such website, and obtain a complete set of the Bidding Documents from such website. Bidders may rely that sets of Bidding Documents obtained from the Bidding Documents Website are complete, unless an omission is blatant. Registered plan holders will receive Addenda issued by Owner.

2.04 Deleted.

2.05 Plan rooms (including construction information subscription services, and electronic and virtual plan rooms) may distribute the Bidding Documents or make them available for examination. Those prospective bidders that obtain an electronic (digital) copy of the Bidding Documents from a plan room are encouraged to register as plan holders from the Bidding Documents Website or Issuing Office. Owner is not responsible for omissions in Bidding Documents or other documents obtained from plan rooms, or for a Bidder's failure to obtain Addenda from a plan room.

2.06 *Electronic Documents*

A. When the Bidding Requirements indicate that electronic (digital) copies of the Bidding Documents are available, such documents will be made available to the Bidders as Electronic Documents in the manner specified.

1. Bidding Documents will be provided in Adobe PDF (Portable Document Format) (.pdf) that is readable by Adobe Acrobat Reader Version 2017 or later. It is the intent of the Engineer and Owner that such Electronic Documents are to be exactly representative of

EJCDC® C-200, Instructions to Bidders for Construction Contract.
Copyright© 2018 National Society of Professional Engineers, American Council of Engineering Companies, and American Society of Civil Engineers. All rights reserved.

the paper copies of the documents. However, because the Owner and Engineer cannot totally control the transmission and receipt of Electronic Documents nor the Contractor's means of reproduction of such documents, the Owner and Engineer cannot and do not guarantee that Electronic Documents and reproductions prepared from those versions are identical in every manner to the paper copies.

B. Unless otherwise stated in the Bidding Documents, the Bidder may use and rely upon complete sets of Electronic Documents of the Bidding Documents, described in Paragraph 2.06.A above. However, Bidder assumes all risks associated with differences arising from transmission/receipt of Electronic Documents versions of Bidding Documents and reproductions prepared from those versions and, further, assumes all risks, costs, and responsibility associated with use of the Electronic Documents versions to derive information that is not explicitly contained in printed paper versions of the documents, and for Bidder's reliance upon such derived information.

C. Deleted.

ARTICLE 3—QUALIFICATIONS OF BIDDERS

3.01 Bidder is to submit the following information with its Bid to demonstrate Bidder's qualifications to perform the Work:

A. Written evidence establishing its qualifications such as financial data, previous experience, and present commitments.

B. A written statement that Bidder is authorized to do business in the state where the Project is located, or a written certification that Bidder will obtain such authority prior to the Effective Date of the Contract.

C. Bidder's state or other contractor license number, if applicable.

D. Subcontractor and Supplier qualification information.

E. Other required information regarding qualifications.

F. Listing of at least three similar projects within the last five years in the Southeast Alaska Region. Include project location, size, owner contact name, and telephone number.

3.02 Deleted.

3.03 Deleted.

3.04 A Bidder's failure to submit required qualification information within the times indicated may disqualify Bidder from receiving an award of the Contract.

3.05 No requirement in this Article 3 to submit information will prejudice the right of Owner to seek additional pertinent information regarding Bidder's qualifications.

3.06 Bidders must be in good standing with the Owner. Good standing includes but is not limited to:

A. No outstanding debts, fees, payments, or taxes owed to the Owner.

B. No outstanding claims between the Owner and Bidder, and

C. No previous history of default of duty, contract, or obligation to the Owner.

Copyright© 2018 National Society of Professional Engineers, American Council of Engineering Companies, and American Society of Civil Engineers. All rights reserved.

ARTICLE 4—PRE-BID CONFERENCE

4.01 Deleted.

4.02 Deleted.

4.03 **All Bidders are strongly encouraged to attend the pre-bid conference as indicated in the Advertisement.** A list of Bidders that attended will be issued in an Addendum.

4.04 Information presented at the pre-Bid conference does not alter the Contract Documents. Owner will issue Addenda to make any changes to the Contract Documents that result from discussions at the pre-Bid conference. Information presented, and statements made at the pre-bid conference will not be binding or legally effective unless incorporated in an Addendum.

ARTICLE 5—SITE AND OTHER AREAS; EXISTING SITE CONDITIONS; EXAMINATION OF SITE; OWNER'S SAFETY PROGRAM; OTHER WORK AT THE SITE

5.01 *Site and Other Areas*

A. The Site is identified in the Bidding Documents. By definition, the Site includes rights-of-way, easements, and other lands furnished by Owner for the use of the Contractor. Any additional lands required for temporary construction facilities, construction equipment, or storage of materials and equipment, and any access needed for such additional lands, are to be obtained and paid for by Contractor.

5.02 *Existing Site Conditions*

A. *Subsurface and Physical Conditions; Hazardous Environmental Conditions*

1. The Supplementary Conditions identify the following regarding existing conditions at or adjacent to the Site:

   a. Those reports of explorations and tests of subsurface conditions at or adjacent to the Site that contain Technical Data.

   b. Those drawings known to Owner of existing physical conditions at or adjacent to the Site, including those drawings depicting existing surface or subsurface structures at or adjacent to the Site (except Underground Facilities), that contain Technical Data.

   c. Reports and drawings known to Owner relating to Hazardous Environmental Conditions that have been identified at or adjacent to the Site.

   d. Technical Data contained in such reports and drawings.

2. Owner will make copies of reports and drawings referenced above available to any Bidder on request. These reports and drawings are not part of the Contract Documents, but the Technical Data contained therein upon whose accuracy Bidder is entitled to rely, as provided in the General Conditions, has been identified and established in the Supplementary Conditions. Bidder is responsible for any interpretation or conclusion Bidder draws from any Technical Data or any other data, interpretations, opinions, or information contained in such reports or shown or indicated in such drawings.

3. If the Supplementary Conditions do not identify Technical Data, the default definition of Technical Data set forth in Article 1 of the General Conditions will apply.

4. Deleted.

Copyright© 2018 National Society of Professional Engineers, American Council of Engineering Companies, and American Society of Civil Engineers. All rights reserved.

B. Deleted.

5.03 *Other Site-related Documents*

A. Deleted.

B. Deleted.

C. Deleted.

D. Deleted.

E. No other Site-related documents are available.

5.04 *Site Visit and Testing by Bidders*

A. Bidder is required to visit the Site and conduct a thorough visual examination of the Site and adjacent areas. During the visit the Bidder must not disturb any ongoing operations at the Site.

B. A Site visit is scheduled following the pre-bid conference. Maps to the Site will be available at the pre-Bid conference.

C. Deleted.

D. Bidders visiting the Site are required to arrange their own transportation to the Site.

E. All access to the Site other than during a regularly scheduled Site visit must be coordinated through the following Owner or Engineer contact for visiting the Site: Chase Nelson, 907-562-2000. Bidder must conduct the required Site visit during normal working hours.

F. Deleted.

G. On request, and to the extent Owner has control over the Site, and schedule permitting, the Owner will provide Bidder general access to the Site to conduct such additional examinations, investigations, explorations, tests, and studies as Bidder deems necessary for preparing and submitting a successful Bid. Owner will not have any obligation to grant such access if doing so is not practical because of existing operations, security or safety concerns, or restraints on Owner's authority regarding the Site. Bidder is responsible for establishing access needed to reach specific selected test sites.

H. Bidder must comply with all applicable Laws and Regulations regarding excavation and location of utilities, obtain all permits, and comply with all terms and conditions established by Owner or by property owners or other entities controlling the Site with respect to schedule, access, existing operations, security, liability insurance, and applicable safety programs.

I. Bidder must fill all holes and clean up and restore the Site to its former condition upon completion of such explorations, investigations, tests, and studies.

5.05 *Owner's Safety Program*

A. Site visits and work at the Site may be governed by an Owner safety program. If an Owner safety program exists, it will be noted in the Supplementary Conditions.

5.06 *Other Work at the Site*

A. Reference is made to Article 8 of the Supplementary Conditions for the identification of the general nature of other work of which Owner is aware (if any) that is to be performed at the Site by Owner or others (such as utilities and other prime contractors) and relates to the Work contemplated by these Bidding Documents. If Owner is party to a written contract for such other work, then on request, Owner will provide to each Bidder access to examine such contracts (other than portions thereof related to price and other confidential matters), if any.

Copyright© 2018 National Society of Professional Engineers, American Council of Engineering Companies, and American Society of Civil Engineers. All rights reserved.

ARTICLE 6—BIDDER'S REPRESENTATIONS AND CERTIFICATIONS

6.01 *Express Representations and Certifications in Bid Form, Agreement*

A. The Bid Form that each Bidder will submit contains express representations regarding the Bidder's examination of Project documentation, Site visit, and preparation of the Bid, and certifications regarding lack of collusion or fraud in connection with the Bid. Bidder should review these representations and certifications and assure that Bidder can make the representations and certifications in good faith, before executing and submitting its Bid.

B. If Bidder is awarded the Contract, Bidder (as Contractor) will make similar express representations and certifications when it executes the Agreement.

ARTICLE 7—INTERPRETATIONS AND ADDENDA

7.01 Owner on its own initiative may issue Addenda to clarify, correct, supplement, or change the Bidding Documents.

7.02 Bidder shall submit all questions about the meaning or intent of the Bidding Documents to Engineer in writing. Contact information and submittal procedures for such questions are as follows:

City and Borough of Wrangell
C/O DOWL
5015 Business Park, Suite 4000
Anchorage, AK 99503
Email: bmjos@dowl.com

7.03 Interpretations or clarifications considered necessary by Engineer in response to such questions will be issued by Addenda delivered to all registered plan holders. Questions received less than seven days prior to the date for opening of Bids may not be answered.

7.04 Only responses set forth in an Addendum will be binding. Oral and other interpretations or clarifications will be without legal effect. Responses to questions are not part of the Contract Documents unless set forth in an Addendum that expressly modifies or supplements the Contract Documents.

ARTICLE 8—BID SECURITY

8.01 A Bid must be accompanied by Bid security made payable to Owner in an amount of **5** percent of Bidder's maximum Bid price (determined by adding the base bid and all alternates) and in the form of a Bid bond issued by a surety meeting the requirements of Paragraph 6.01 of the General Conditions. Such Bid bond will be issued in the form included in the Bidding Documents. **Bid security must be at least 5% of the Bidder's maximum Bid price.**

8.02 The Bid security of the apparent Successful Bidder will be retained until Owner awards the contract to such Bidder, and such Bidder has executed the Contract, furnished the required Contract security, and met the other conditions of the Notice of Award, whereupon the Bid security will be released. If the Successful Bidder fails to execute and deliver the Contract and furnish the required Contract security within 15 days after the Notice of Award, Owner may consider Bidder to be in default, annul the Notice of Award, and the Bid security of that Bidder will be forfeited, in whole in the case of a penal sum bid bond, and to the extent of Owner's damages in the case of a damages-form bond. Such forfeiture will be Owner's exclusive remedy if Bidder defaults.

8.03 The Bid security of other Bidders that Owner believes to have a reasonable chance of receiving the award may be retained by Owner until the earlier of 7 days after the Effective Date of the Contract

Copyright© 2018 National Society of Professional Engineers, American Council of Engineering Companies, and American Society of Civil Engineers. All rights reserved.

or 61 days after the Bid opening, whereupon Bid security furnished by such Bidders will be released.

8.04 Bid security of other Bidders that Owner believes do not have a reasonable chance of receiving the award will be released within 7 days after the Bid opening.

ARTICLE 9—CONTRACT TIMES

9.01 The number of days within which, or the dates by which, the Work is to be (a) substantially completed and (b) ready for final payment, and (c) Milestones (if any) are to be achieved, are set forth in the Agreement.

9.02 Deleted.

9.03 Provisions for liquidated damages, if any, for failure to timely attain a Milestone, Substantial Completion, or completion of the Work in readiness for final payment, are set forth in the Agreement.

ARTICLE 10—SUBSTITUTE AND "OR EQUAL" ITEMS

10.01 Deleted.

10.02 The Contract for the Work, as awarded, will be on the basis of materials and equipment specified or described in the Bidding Documents, and those "or-equal" or substitute or materials and equipment subsequently approved by Engineer prior to the submittal of Bids and identified by Addendum. No item of material or equipment will be considered by Engineer as an "or-equal" or substitute unless written request for approval has been submitted by Bidder and has been approved by the Engineer in accordance with the Bid Form. Each such request must comply with the requirements of Paragraphs 7.05 and 7.06 of the General Conditions, and the review of the request will be governed by the principles in those paragraphs. **Each such request shall include the Manufacturer's Certification for Compliance with Domestic Preference requirements**. **Refer to the Manufacturer's Certification form provided in these construction Contract Documents.** The burden of proof of the merit of the proposed item is upon Bidder. Engineer's decision of approval or disapproval of a proposed item will be final. If Engineer approves any such proposed item, such approval will be set forth in an Addendum issued to all registered Bidders. Bidders cannot rely upon approvals made in any other manner. **Substitutes and "or-equal" materials and equipment may be proposed by Contractor in accordance with Paragraphs 7.05 and 7.06 of the General Conditions after the Effective Date of the Contract. Each such request shall include Manufacturer's Certification letter to document compliance with Domestic Preference requirements. Refer to Manufacturer's Certification Letter provided in these Contract Documents.**

10.03 All prices that Bidder sets forth in its Bid will be based on the presumption that the Contractor will furnish the materials and equipment specified or described in the Bidding Documents, as supplemented by Addenda. Any assumptions regarding the possibility of post-Bid approvals of "or-equal" or substitution requests are made at Bidder's sole risk.

ARTICLE 11—SUBCONTRACTORS, SUPPLIERS, AND OTHERS

11.01 Deleted.

Copyright© 2018 National Society of Professional Engineers, American Council of Engineering Companies, and American Society of Civil Engineers. All rights reserved.

11.02 The apparent Successful Bidder, and any other Bidder so requested, must submit to Owner a list of the Subcontractors or Suppliers proposed for the following portions of the Work within five days after Bid opening:

A. Electrical

B. Site Civil

C. Mechanical and Piping

D. Vertical Structures

E. Instrumentation

11.03 If requested by Owner, such list must be accompanied by an experience statement with pertinent information regarding similar projects and other evidence of qualification for each such Subcontractor or Supplier. If Owner or Engineer, after due investigation, has reasonable objection to any proposed Subcontractor or Supplier, Owner may, before the Notice of Award is given, request apparent Successful Bidder to submit an acceptable substitute, in which case apparent Successful Bidder will submit a substitute, Bidder's Bid price will be increased (or decreased) by the difference in cost occasioned by such substitution, and Owner may consider such price adjustment in evaluating Bids and making the Contract award.

11.04 If apparent Successful Bidder declines to make any such substitution, Owner may award the Contract to the next lowest Bidder that proposes to use acceptable Subcontractors and Suppliers. Declining to make requested substitutions will constitute grounds for forfeiture of the Bid security of any Bidder. Any Subcontractor or Supplier, so listed and against which Owner or Engineer makes no written objection prior to the giving of the Notice of Award will be deemed acceptable to Owner and Engineer subject to subsequent revocation of such acceptance as provided in Paragraph 7.07 of the General Conditions.

11.05 **The Contractor shall not award work to Subcontractor(s) in excess of the limits stated in SC 7.07A.**

ARTICLE 12—PREPARATION OF BID

12.01 The Bid Form is included with the Bidding Documents.

A. All blanks on the Bid Form must be completed in ink and the Bid Form signed in ink. Erasures or alterations must be initialed in ink by the person signing the Bid Form. A Bid price must be indicated for each section, Bid item, alternate, adjustment unit price item, and unit price item listed therein.

B. If the Bid Form expressly indicates that submitting pricing on a specific alternate item is optional, and Bidder elects to not furnish pricing for such optional alternate item, then Bidder may enter the words "No Bid" or "Not Applicable."

12.02 If Bidder has obtained the Bidding Documents as Electronic Documents, then Bidder shall prepare its Bid on a paper copy of the Bid Form printed from the Electronic Documents version of the Bidding Documents. The printed copy of the Bid Form must be clearly legible, printed on 8½ inch by 11-inch paper and as closely identical in appearance to the Electronic Document version of the Bid Form as may be practical. The Owner reserves the right to accept Bid Forms which nominally vary in appearance from the original paper version of the Bid Form, providing that all required information and submittals are included with the Bid.

Copyright© 2018 National Society of Professional Engineers, American Council of Engineering Companies, and American Society of Civil Engineers. All rights reserved.

12.03 A Bid by a corporation must be executed in the corporate name by a corporate officer (whose title must appear under the signature), accompanied by evidence of authority to sign. The corporate address and state of incorporation must be shown.

12.04 A Bid by a partnership must be executed in the partnership name and signed by a partner (whose title must appear under the signature), accompanied by evidence of authority to sign. The official address of the partnership must be shown.

12.05 A Bid by a limited liability company must be executed in the name of the firm by a member or other authorized person and accompanied by evidence of authority to sign. The state of formation of the firm and the official address of the firm must be shown.

12.06 A Bid by an individual must show the Bidder's name and official address.

12.07 A Bid by a joint venture must be executed by an authorized representative of each joint venturer in the manner indicated on the Bid Form. The joint venture must have been formally established prior to submittal of a Bid, and the official address of the joint venture must be shown.

12.08 All names must be printed in ink below the signatures.

12.09 The Bid must contain an acknowledgment of receipt of all Addenda, the numbers of which must be filled in on the Bid Form.

12.10 Postal and e-mail addresses and telephone number for communications regarding the Bid must be shown.

12.11 The Bid must contain evidence of Bidder's authority to do business in the state where the Project is located, or Bidder must certify in writing that it will obtain such authority within the time for acceptance of Bids and attach such certification to the Bid.

12.12 If Bidder is required to be licensed to submit a Bid or perform the Work in the state where the Project is located, the Bid must contain evidence of Bidder's licensure, or Bidder must certify in writing that it will obtain such licensure within the time for acceptance of Bids and attach such certification to the Bid. Bidder's state contractor license number, if any, must also be shown on the Bid Form.

ARTICLE 13—BASIS OF BID

13.01 *Lump Sum*

A. Bidders must submit a Bid on a lump sum basis as set forth in the Bid Form.

13.02 *Base Bid with Alternates*

A. Not used

13.03 **Deleted.**

13.04 **Deleted.**

13.05 *Unit Price*

A. Not used

B. Deleted.

Copyright© 2018 National Society of Professional Engineers, American Council of Engineering Companies, and American Society of Civil Engineers. All rights reserved.

13.06 **Deleted.**

13.07 **Deleted.**

ARTICLE 14—SUBMITTAL OF BID

14.01 The Bidding Documents include one separate unbound copy of the Bid Form, and, if required, the Bid Bond Form. The unbound copy of the Bid Form is to be completed and submitted with the Bid security and the other documents required to be submitted under the terms of Article 2 of the Bid Form.

14.02 A Bid must be received no later than the date and time prescribed and at the place indicated in the Advertisement or invitation to bid and must be enclosed in a plainly marked package with the Project title, and, if applicable, the designated portion of the Project for which the Bid is submitted, the name and address of Bidder, and must be accompanied by the Bid security and other required documents. If a Bid is sent by mail or other delivery system, the sealed envelope containing the Bid must be enclosed in a separate package plainly marked on the outside with the notation "BID ENCLOSED." A mailed Bid must be addressed to the location designated in the Advertisement.

14.03 Bids received after the date and time prescribed for the opening of bids, or not submitted at the correct location or in the designated manner, will not be accepted and will be returned to the Bidder unopened.

ARTICLE 15—MODIFICATION AND WITHDRAWAL OF BID

15.01 An unopened Bid may be withdrawn by an appropriate document duly executed in the same manner that a Bid must be executed and delivered to the place where Bids are to be submitted prior to the date and time for the opening of Bids. Upon receipt of such notice, the unopened Bid will be returned to the Bidder.

15.02 If a Bidder wishes to modify its Bid prior to Bid opening, Bidder may modify by fax, email, or otherwise up to the bid opening, provided the sealed bid has been received and their modification does not reveal their final price.

15.03 If within 24 hours after Bids are opened any Bidder files a duly signed written notice with Owner and promptly thereafter demonstrates to the reasonable satisfaction of Owner that there was a material and substantial mistake in the preparation of its Bid, the Bidder may withdraw its Bid, and the Bid security will be returned. Thereafter, if the Work is rebid, the Bidder will be disqualified from further bidding on the Work.

ARTICLE 16—OPENING OF BIDS

16.01 Bids will be opened at the time and place indicated in the advertisement or invitation to bid and, unless obviously non-responsive, read aloud publicly. An abstract of the amounts of the base Bids and major alternates, if any, will be made available to Bidders after the opening of Bids.

ARTICLE 17—BIDS TO REMAIN SUBJECT TO ACCEPTANCE

17.01 All Bids will remain subject to acceptance for the period of time stated in the Bid Form, but Owner may, in its sole discretion, release any Bid and return the Bid security prior to the end of this period.

Copyright© 2018 National Society of Professional Engineers, American Council of Engineering Companies, and American Society of Civil Engineers. All rights reserved.

ARTICLE 18—EVALUATION OF BIDS AND AWARD OF CONTRACT

18.01 Owner reserves the right to reject any or all Bids, including without limitation, nonconforming, nonresponsive, unbalanced, or conditional Bids. Owner also reserves the right to waive all minor Bid informalities not involving price, time, or changes in the Work.

18.02 Owner will reject the Bid of any Bidder that Owner finds, after reasonable inquiry and evaluation, to not be responsible.

18.03 If Bidder purports to add terms or conditions to its Bid, takes exception to any provision of the Bidding Documents, or attempts to alter the contents of the Contract Documents for purposes of the Bid, whether in the Bid itself or in a separate communication to Owner or Engineer, then Owner will reject the Bid as nonresponsive.

18.04 If Owner awards the contract for the Work, such award will be to the responsible Bidder submitting the lowest responsive Bid.

18.05 *Evaluation of Bids*

A. In evaluating Bids, Owner will consider whether the Bids comply with the prescribed requirements, and such alternates, unit prices, and other data, as may be requested in the Bid Form or prior to the Notice of Award.

B. In the comparison of Bids, alternates will be applied in the same order of priority as listed in the Bid Form. To determine the Bid prices for purposes of comparison, Owner will announce to all bidders a "Base Bid plus alternates" budget after receiving all Bids, but prior to opening them. For comparison purposes alternates will be accepted, following the order of priority established in the Bid Form, until doing so would cause the budget to be exceeded. After determination of the Successful Bidder based on this comparative process and on the responsiveness, responsibility, and other factors set forth in these Instructions, the award may be made to said Successful Bidder on its base Bid and any combination of its additive alternate Bids for which Owner determines funds will be available at the time of award.

C. Deleted.

D. For the determination of the apparent low Bidder when unit price bids are submitted, Bids will be compared on the basis of the total of the products of the estimated quantity of each item and unit price Bid for that item, together with any lump sum items.

E. **Deleted.**

F. **Deleted.**

18.06 In evaluating whether a Bidder is responsible, Owner will consider the qualifications of the Bidder and may consider the qualifications and experience of Subcontractors and Suppliers proposed for those portions of the Work for which the identity of Subcontractors and Suppliers must be submitted as provided in the Bidding Documents.

18.07 Owner may conduct such investigations as Owner deems necessary to establish the responsibility, qualifications, and financial ability of Bidders and any proposed Subcontractors or Suppliers.

ARTICLE 19—BONDS AND INSURANCE

19.01 Article 6 of the General Conditions, as may be modified by the Supplementary Conditions, sets forth Owner's requirements as to performance and payment bonds, other required bonds (if any),

Copyright© 2018 National Society of Professional Engineers, American Council of Engineering Companies, and American Society of Civil Engineers. All rights reserved.

and insurance. When the Successful Bidder delivers the executed Agreement to Owner, it must be accompanied by required bonds and insurance documentation.

19.02 Article 8, Bid Security, of these Instructions, addresses any requirements for providing bid bonds as part of the bidding process.

ARTICLE 20—SIGNING OF AGREEMENT

20.01 When Owner issues a Notice of Award to the Successful Bidder, it will be accompanied by the unexecuted counterparts of the Agreement along with the other Contract Documents as identified in the Agreement. Within 15 days thereafter, Successful Bidder must execute and deliver the required number of counterparts of the Agreement and any bonds and insurance documentation required to be delivered by the Contract Documents to Owner. Within 10 days thereafter, Owner will deliver one fully executed counterpart of the Agreement to Successful Bidder, together with printed and electronic copies of the Contract Documents as stated in Paragraph 2.02 of the General Conditions.

ARTICLE 21—SALES AND USE TAXES
DELETED.

ARTICLE 22—CONTRACTS TO BE ASSIGNED

DELETED.

ARTICLE 23— FEDERAL REQUIREMENTS

23.01 **If the contract price is in excess of $100,000, provisions of the Contract Work Hours and Safety Standards Act at 29 CFR 5.5(b) apply.**

23.02 **Federal requirements at Article 19 of the Supplementary Conditions apply to this Contract.**

23.03 **BABAA requirements apply to this project.**

23.04 **This project will be partially funded with Federal funds from the United States Department of Commerce, Economic Development Administration and therefore is subject to the Federal laws and regulations associated with that program.**

23.05 **The Recipient shall include a term or condition in all lower tier covered transactions (subawards, contracts, and subcontracts) requiring lower tier participants to comply with subpart C of 2 CFR part 180, "OMB Guidelines to Agencies on Governmentwide Debarment and Suspension (Non procurement)."**

c. Required subaward and contractual provisions:

i. The Recipient shall include a statement in all lower tier covered transactions (subawards, contracts, and subcontracts) exceeding $100,000 in Federal funds that the subaward, contract, or subcontract is subject to 31 U.S.C. § 1352, as implemented at 15 CFR part 28 ("New Restrictions on Lobbying"). The Recipient shall further require the subrecipient, contractor, or subcontractor to submit a completed "Disclosure of Lobbying Activities" (Form SF-LLL) regarding the use of non-Federal funds for lobbying. The Form SF-LLL shall be submitted within 15 days following the end of the calendar quarter in which there occurs any event that requires disclosure or that materially affects the accuracy of the information contained in any disclosure form previously filed. The Form SF-LLL shall be submitted from tier to tier until received by the Recipient. The Recipient must submit all disclosure forms received, including

Copyright© 2018 National Society of Professional Engineers, American Council of Engineering Companies, and American Society of Civil Engineers. All rights reserved.

those that report lobbying activity on its own behalf, to the Project Officer within 30 days following the end of the calendar quarter.

ii. In addition to other provisions required by the Federal agency or Recipient, in accordance with 2 CFR § 200.326 ("Contract provisions"), all contracts made by the Recipient under this Award must contain the applicable provisions set out in Appendix II to 2 CFR part 200 ("Contract Provisions for Non-Federal Entity Contracts Under Federal Awards"), which address various contractual requirements including remedies, termination for cause and convenience, Equal Employment Opportunity, the Davis-Bacon Act, the Contract Work Hours and Safety Standards Act, rights to inventions, environmental quality, energy efficiency, debarment and suspension, the Byrd Anti-Lobbying Amendment, and procurement of recovered materials. See Appendix II to 2 CFR part 200 for a full explanation of these requirements.

23.06 **Labor standards**. All contractors on EDA-assisted projects are required to perform their work in accordance with OSHA regulations and the Contract Work Hours and Safety Standards Act (40 U.S.C. §§ 3701-3708), as supplemented by U.S. Department of Labor's regulations (29 C.F.R. parts 5 and 1926). The Recipient or its architect/engineer should periodically check the contractor's compliance. The Recipient shall notify EDA of all serious accidents and/or injuries that occur on the EDA-assisted project.

23.07 **The Davis-Bacon Act, as amended** (40 U.S.C. §§ 3141–3144, 3146, 3147; 42 U.S.C. § 3212), which requires minimum wages for mechanics and laborers employed on Federal Government public works projects to be based on the wages that the Secretary of Labor determines to be prevailing for the corresponding classes of laborers and mechanics employed on projects of a character similar to the contract work in the civil subdivision of the State in which the Project is to be performed, or in the District of Columbia if the Project is to be performed there. **Wage decisions, federal labor requirements, and state labor requirements are attached. The higher wage rate (state or federal) for a given labor position in any one classification must be paid.**

This project is subject to both State and Federal Wage requirements. Successful bidder will be responsible to comply with both wage requirements and pay the higher of the two for a given wage category. Successful bidder will be responsible for submitting all appropriate certified payrolls.

23.08 **The Contract Work Hours and Safety Standards Act, as amended (40 U.S.C. §§ 3701-3708),** which provides work hour standards for every laborer and mechanic employed by any contractor or subcontractor in the performance of a Federal public works project.

23.09 **The National Historic Preservation Act of 1966, as amended (54 U.S.C. § 300101 et seq.), and the Advisory Council on Historic Preservation Guidelines (36 CFR part 800),** which require stewardship of historic properties in projects involving Federal funds.

23.10 **The Historical and Archeological Data Preservation Act of 1974, as amended (16 U.S.C. § 469a-1 et seq.),** which requires appropriate surveys and preservation efforts if a Federally licensed project may cause irreparable loss or destruction of significant scientific, prehistorical, historical, or archeological data.

23.11 **The Architectural Barriers Act of 1968, as amended (42 U.S.C. § 4151 et** seq.), and the regulations issued thereunder, which prescribe standards for the design and construction of

Copyright© 2018 National Society of Professional Engineers, American Council of Engineering Companies, and American Society of Civil Engineers. All rights reserved.

any building or facility intended to be accessible to the public or that may house handicapped employees.

23.12 **The Uniform Relocation Assistance and Real Property Acquisition Policies Act of 1970, as amended (42 U.S.C. § 4601 et seq.),** and implementing regulations issued at 49 CFR part 24 ("Uniform Relocation Assistance and Real Property Acquisition for Federal and Federally Assisted Programs"), which establish uniform policies for the fair and equitable treatment of persons, businesses, or farm operations affected by the acquisition, rehabilitation, or demolition of real property acquired for a project financed wholly or in part with Federal financial assistance.

23.13 **The Energy Conservation and Production Act (42 U.S.C. § 6834 et seq.),** which establishes energy efficiency performance standards for the construction of new residential and commercial structures undertaken with Federal financial assistance.

23.14 **Compliance with Local Construction Requirements**. The Recipient will comply with current local building codes, standards, and other requirements applicable to the Project.

23.15 **GOALS FOR WOMEN AND MINORITIES IN CONSTRUCTION:** Department of Labor regulations set forth in 41 C.F.R. § 60-4 establish goals and timetables for participation of minorities and women in the construction industry. These regulations apply to all federally assisted construction contracts in excess of $10,000. The Recipient shall comply with these regulations and shall obtain compliance with 41 C.F.R. § 60-4 from contractors and subcontractors employed in the completion of the Project by including such notices, clauses and provisions in the Solicitations for Offers or Bids as required by 41 C.F.R. § 60-4. The goal for the participation of women in each trade area shall be as follows: From April 1, 1981, until further notice: 6.9 percent.

All changes to this goal, as published in the *Federal Register* in accordance with the Office of Federal Contract Compliance Programs regulations at 41 C.F.R. § 60-4.6, or any successor regulations, shall hereafter be incorporated by reference into these Special Award Conditions.

Goals for minority participation shall be as prescribed by Appendix B-80, *Federal Register*, Volume 45, No. 194, October 3, 1980, or subsequent publications. The Recipient shall include the "*Standard Federal Equal Employment Opportunity Construction Contract Specifications*" (or cause them to be included, if appropriate) in all Federally-assisted contracts and subcontracts. The goals and timetables for minority and female participation may not be less than those published pursuant to 41 C.F.R. § 60-4.6.

In accordance with the following authorities, discrimination is prohibited by a Recipient or "Other Party" (as defined in 13 C.F.R. § 302.20(b)) with respect to a project receiving EDA investment assistance under PWEDA:

1. Title VI of the Civil Rights Act of 1964 (42 U.S.C. § 2000d *et seq*.) and the Department's implementing regulations at 15 C.F.R. part 8, which prohibit discrimination on the grounds of race, color, or national origin under programs or activities receiving federal financial assistance;
2. Title IX of the Education Amendments of 1972 (20 U.S.C. § 1681 *et seq*.) prohibiting discrimination on the basis of sex under federally-assisted education programs or activities;

Copyright© 2018 National Society of Professional Engineers, American Council of Engineering Companies, and American Society of Civil Engineers. All rights reserved.

3. Pub. L. No. 92-65, 42 U.S.C. § 3123 (proscribing discrimination on the basis of sex in EDA assistance provided under PWEDA) and Pub. L. No. 94-369, 42 U.S.C. § 6709 (proscribing discrimination on the basis of sex under the Local Public Works Program), and the Department's implementing regulations at 15 C.F.R. §§ 8.7-8.15;
4. Section 504 of the Rehabilitation Act of 1973 (29 U.S.C. § 794), and the Department's implementing regulations at 15 C.F.R. part 8b, which prohibit discrimination on the basis of handicap under any program or activity receiving or benefiting from federal assistance;
5. The Age Discrimination Act of 1975 (42 U.S.C. § 6101 *et seq*.), and the Department's implementing regulations at 15 C.F.R. part 20, which prohibit discrimination on the basis of age in programs or activities receiving federal financial assistance;
6. The Americans with Disabilities Act of 1990 (42 U.S.C. § 12101 *et seq*.) prohibiting discrimination on the basis of disability under programs, activities and services provided or made available by State and local governments or instrumentalities or agencies thereto, as well as public or private entities that provide public transportation; and other federal statutes, regulations and Executive Orders, as applicable. *See generally* 13 C.F.R. § 302.20.

23.16 **MIGRATORY BIRDS:** To ensure ground-disturbing activities do not result in "take" of an active nest or migratory bird protected under the Migratory Bird Treaty Act, the Contractor shall follow recommendations and requirements of the U.S. Fish and Wildlife Service: **No vegetation clearing April 15 through July 15.**

23.17 **NATIONAL POLLUTANT DISCHARGE ELIMINATION SYSTEM (NPDES) PERMIT**: Contractor shall obtain a Construction General Permit and other relevant site permits prior to the start of construction, and provide documentation the permit has been obtained.

23.18 **FUNDING AGENCY REQUIREMENTS**: This project is funded through various funding agencies including the United States Department of Agriculture Rural Development, the Economic Development Agency, the State of Alaska, and the City and Borough of Wrangell. Following the bid, the Borough will request assistance with designating a certain portion of each lump sum bid item to the various funding agencies. These designations would be included in the Owner Approved Schedule of Values.

Copyright© 2018 National Society of Professional Engineers, American Council of Engineering Companies, and American Society of Civil Engineers. All rights reserved.

SECTION 00 36 00 - SUBCONTRACTOR REPORT

LIST OF SUBCONTRACTORS

The apparent low Bidder must submit a list of Subcontractors that the Bidder proposes to use in the performance of this contract. The list must include each Subcontractor's name, address, location, evidence of valid Alaska Business License, and valid Alaska Contractor's Registration under AS 08.18. ***If no Subcontractors are to be utilized in the performance of the WORK, write in ink or type "NONE" on line (1) below.***

SUBCONTRACTOR ADDRESS	[1] AK Contractor License No. [2] AK Business License No. [3] Sam.gov UEI No.	[1] Contact Name [2] Phone No.	Type of Work	Contract Amount	✓ if DBE
1. _____	[1] _____	_____	_____	$ _____	☐
_____	[2] _____	_____			
_____	[3] _____				
2. _____	[1] _____	_____	_____	$ _____	☐
_____	[2] _____	_____			
_____	[3] _____				
3. _____	[1] _____	_____	_____	$ _____	☐
_____	[2] _____	_____			
_____	[3] _____				
4. _____	[1] _____	_____	_____	$ _____	☐
_____	[2] _____	_____			
_____	[3] _____				

5. _____	1 _____	_____	_____	$ _____	☐
_____	2 _____	_____			
_____	3 _____				
6. _____	1 _____	_____	_____	$ _____	☐
_____	2 _____	_____			
_____	3 _____				
7. _____	1 _____	_____	_____	$ _____	☐
_____	2 _____	_____			
_____	3 _____				

I certify that the above listed Alaska Business License(s) and CONTRACTOR Registration(s), if applicable, were valid at the time Bids were opened for this Project.

_____
CONTRACTOR, Authorized Signature

_____
CONTRACTOR, Printed Name

A. A Bidder may replace a listed Subcontractor if the Subcontractor:

1. fails to comply with AS 08.18;
2. files for bankruptcy or becomes insolvent;
3. fails to execute a contract with the Bidder involving performance of the WORK for which the Subcontractor was listed and the Bidder acted in good faith;
4. fails to obtain bonding;
5. fails to obtain insurance acceptable to the OWNER;
6. fails to perform the contract with the Bidder involving work for which the Subcontractor was listed;
7. must be substituted in order for the CONTRACTOR to satisfy required state and federal affirmative action requirements;
8. refuses to agree or abide with the Bidder's labor agreement; or
9. is determined by the OWNER not to be a responsible Bidder.

B. If a Bidder fails to list a Subcontractor or lists more than one Subcontractor for the same portion of WORK, the Bidder shall be considered to have agreed to perform that portion of WORK without the use of a Subcontractor and to have represented the Bidder to be qualified to perform that WORK.

C. A Bidder who attempts to circumvent the requirements of this section by listing as a Subcontractor another contractor who, in turn, sublets the majority of the WORK required under the contract violates this section.

D. If a contract is awarded to a Bidder who violates this section, the OWNER may:

1. cancel the contract; or
2. after notice and a hearing, assess a penalty on the Bidder in an amount that does not exceed 10 percent of the value of the subcontract at issue.

E. For contract award, the apparent low Bidder must submit one copy of each subcontract, to the OWNER, for WORK with a value of greater than one half of one percent of the intended award amount.

F. An apparent low Bidder who fails to submit a completed Subcontractor Report within the time specified in this section will be found to be not a responsible Bidder and may be required to forfeit the Bid security. The OWNER will then consider the next lowest Bidder for award of the contract.

END OF SECTION

SECTION 00 41 13

BID FORM

TABLE OF CONTENTS

Page

Article 1— Owner and Bidder....1
Article 2— Attachments to this Bid....1
Article 3— Basis of Bid—Lump Sum Bid and Unit Prices....2
BASE BID SCHEDULE....2
Article 4— DELETED....3
Article 5— DELETED....3
Article 6— Time of Completion....3
Article 7— Bidder's Acknowledgements: Acceptance Period, Instructions, and Receipt of Addenda....3
Article 8— Bidder's Representations and Certifications....3

Copyright© 2018 National Society of Professional Engineers, American Council of Engineering Companies, and American Society of Civil Engineers. All rights reserved.

BID FORM FOR CONSTRUCTION CONTRACT

The terms used in this Bid with initial capital letters have the meanings stated in the Instructions to Bidders, the General Conditions, and the Supplementary Conditions.

ARTICLE 1—OWNER AND BIDDER

1.01 This Bid is submitted to:

City and Borough of Wrangell
C/O: Borough Clerk
P.O. Box 531
205 Brueger Street
Wrangell, Alaska 99929

1.02 The undersigned Bidder proposes and agrees, if this Bid is accepted, to enter into an Agreement with Owner in the form included in the Bidding Documents to perform all Work as specified or indicated in the Bidding Documents for the prices and within the times indicated in this Bid and in accordance with the other terms and conditions of the Bidding Documents.

ARTICLE 2—ATTACHMENTS TO THIS BID

2.01 The following documents are submitted with and made a condition of this Bid:

A. Required Bid security;

B. List of Proposed Subcontractors and their Sam.gov-issued Unique Entity Identification (UEI) number;

C. List of Proposed Suppliers;

D. Evidence of authority to do business in the state of the Project; or a written covenant to obtain such authority within the time for acceptance of Bids;

E. Contractor's license number as evidence of Bidder's State Contractor's License or a covenant by Bidder to obtain said license within the time for acceptance of Bids;

F. Required Bidder Qualification Statement with supporting data;

G. If Bid amount exceeds $10,000, signed Compliance Statement (RD 400-6). Refer to specific equal opportunity requirements set forth in the Supplementary Conditions of the Construction Contract (EJCDC C-800). Notice of Requirements for Affirmative Action to Ensure Equal Employment Opportunity (Executive Order 11246 and 41 CFR Part 60-4);

H. If Bid amount exceeds $25,000, signed Certification Regarding Debarment, Suspension, Ineligibility and Voluntary Exclusion - Lower Tier Covered Transactions (AD-1048);

I. If Bid amount exceeds $100,000, signed RD Instruction 1940-Q Exhibit A-1, Certification for Contracts, Grants, and Loans.

J. Manufacturer's Certification of compliance with the Build America, Buy America Act (BABAA) requirements mandated by Title IX of the Infrastructure Investment and Jobs Act ("IIJA"), Pub. L. 177-58.

K. Bidder current SAM.gov active registration and Unique Entity Identification (UEI) number. The Contractor and subcontractors must certify, that neither it nor its principals are presently debarred, suspended, proposed for debarment, declared

Copyright© 2018 National Society of Professional Engineers, American Council of Engineering Companies, and American Society of Civil Engineers. All rights reserved.

ineligible, or voluntarily excluded from participation in this Contract by any federal department or agency.

L. If Bid amount exceeds $100,000 at any tier, Form CD-512 Certification Regarding Lobbying regarding the use of any nonfederal funds for lobbying must be filed. Certifications shall be retained by the Contractor and subcontractors at the next higher tier.

M. Certification of Compliance with the "Build America, Buy America" Provision of the Infrastructure Investments and Jobs Act.

ARTICLE 3—BASIS OF BID—LUMP SUM BID PRICES

3.01 *Lump Sum Bid Prices*

A. Bidder will perform the following Work at the indicated lump sum bid prices:

BASE BID SCHEDULE

Item No.	Description	Unit	Estimated Quantity	Bid Amount
101	Mobilization and Demobilization	Lump Sum	1	$
102	Construction Survey and Record Drawings	Lump Sum	1	$
103	Storm Water Pollution Prevention Plan and Erosion and Pollution Control	Lump Sum	1	$
104	Furnishing Water Plant Treatment Process Equipment	Lump Sum	1	$3,442,889.70
105	Civil Site Work	Lump Sum	1	$
106	Construction of New Water Treatment Plant	Lump Sum	1	$
107	Startup, Commissioning, Automation, Switchover, Project Operation and Maintenance Manuals	Lump Sum	1	$
108	Furnish and Install Filter Backwash-to-Waste Line, Flow Control Valve, and Vault	Lump Sum	1	$
109	Conversion of Slow Sand Filter to Chlorine Contact Basins	Lump Sum	1	$
110	Conversion of Roughing Filter to Backwash Equalization Basin	Lump Sum	1	$
111	Conversion of Existing Administration Building to Control Building	Lump Sum	1	$
TOTAL BID				$

Copyright© 2018 National Society of Professional Engineers, American Council of Engineering Companies, and American Society of Civil Engineers. All rights reserved.

B. Bidder acknowledges that:

1. Each Bid Item Price includes an amount considered by Bidder to be adequate to cover Contractor's overhead and profit for each separately identified item.
2. Bidder will be selected on total bid.
3. Bidder will comply with State of Alaska Wage Rates and Federal Wage Rates.
4. If Bidder wishes to submit manufacturer's data for a product for preliminary approval, the bidder must submit the manufacturer's data no later than when questions are due. Preliminary approvals will be granted on a case-by-case basis and are not guaranteed. Preliminary approvals are not to take the place of the submittal review and approval process with the successful bidder.

ARTICLE 4—DELETED

ARTICLE 5—DELETED

ARTICLE 6—TIME OF COMPLETION

6.01 Bidder agrees that the Work will be substantially complete and will be completed and ready for final payment in accordance with Paragraph 15.06 of the General Conditions on or before the dates or within the number of calendar days indicated in the Agreement.

6.02 DELETED

6.03 DELETED

6.04 Bidder accepts the provisions of the Agreement as to liquidated damages.

ARTICLE 7—BIDDER'S ACKNOWLEDGEMENTS: ACCEPTANCE PERIOD, INSTRUCTIONS, AND RECEIPT OF ADDENDA

7.01 *Bid Acceptance Period*

A. This Bid will remain subject to acceptance for 60 days after the Bid opening, or for such longer period of time that Bidder may agree to in writing upon request of Owner.

7.02 *Instructions to Bidders*

A. Bidder accepts all of the terms and conditions of the Instructions to Bidders, including without limitation those dealing with the disposition of Bid security.

7.03 *Receipt of Addenda*

A. Bidder hereby acknowledges receipt of the following Addenda:

Addendum Number	Addendum Date

Copyright© 2018 National Society of Professional Engineers, American Council of Engineering Companies, and American Society of Civil Engineers. All rights reserved.

ARTICLE 8—BIDDER'S REPRESENTATIONS AND CERTIFICATIONS

8.01 *Bidder's Representations*

A. In submitting this Bid, Bidder represents the following:

1. Bidder has examined and carefully studied the Bidding Documents, including Addenda.
2. Bidder has visited the Site, conducted a thorough visual examination of the Site and adjacent areas, and become familiar with the general, local, and Site conditions that may affect cost, progress, and performance of the Work.
3. Bidder is familiar with all Laws and Regulations that may affect cost, progress, and performance of the Work**, including all Domestic Preference requirements.**
4. Bidder has carefully studied the reports of explorations and tests of subsurface conditions at or adjacent to the Site and the drawings of physical conditions relating to existing surface or subsurface structures at the Site that have been identified in the Supplementary Conditions, with respect to the Technical Data in such reports and drawings.
5. Bidder has carefully studied the reports and drawings relating to Hazardous Environmental Conditions, if any, at or adjacent to the Site that have been identified in the Supplementary Conditions, with respect to Technical Data in such reports and drawings.
6. Bidder has considered the information known to Bidder itself; information commonly known to contractors doing business in the locality of the Site; information and observations obtained from visits to the Site; the Bidding Documents; and the Technical Data identified in the Supplementary Conditions or by definition, with respect to the effect of such information, observations, and Technical Data on (a) the cost, progress, and performance of the Work; (b) the means, methods, techniques, sequences, and procedures of construction to be employed by Bidder, if selected as Contractor; and (c) Bidder's (Contractor's) safety precautions and programs.
7. Based on the information and observations referred to in the preceding paragraph, Bidder agrees that no further examinations, investigations, explorations, tests, studies, or data are necessary for the performance of the Work at the Contract Price, within the Contract Times, and in accordance with the other terms and conditions of the Contract.
8. Bidder is aware of the general nature of work to be performed by Owner and others at the Site that relates to the Work as indicated in the Bidding Documents.
9. Bidder has given Engineer written notice of all conflicts, errors, ambiguities, or discrepancies that Bidder has discovered in the Bidding Documents, and of discrepancies between Site conditions and the Contract Documents, and the written resolution thereof by Engineer is acceptable to Contractor.
10. The Bidding Documents are generally sufficient to indicate and convey understanding of all terms and conditions for performance and furnishing of the Work.
11. The submission of this Bid constitutes an incontrovertible representation by Bidder that without exception the Bid and all prices in the Bid are premised upon performing and furnishing the Work required by the Bidding Documents.

8.02 *Bidder's Certifications*

A. The Bidder certifies the following:

Copyright© 2018 National Society of Professional Engineers, American Council of Engineering Companies, and American Society of Civil Engineers. All rights reserved.

1. This Bid is genuine and not made in the interest of or on behalf of any undisclosed individual or entity and is not submitted in conformity with any collusive agreement or rules of any group, association, organization, or corporation.
2. Bidder has not directly or indirectly induced or solicited any other Bidder to submit a false or sham Bid.
3. Bidder has not solicited or induced any individual or entity to refrain from bidding.
4. Bidder has not engaged in corrupt, fraudulent, collusive, or coercive practices in competing for the Contract. For the purposes of this Paragraph 8.02.A:
   a. Corrupt practice means the offering, giving, receiving, or soliciting of anything of value likely to influence the action of a public official in the bidding process.
   b. Fraudulent practice means an intentional misrepresentation of facts made (a) to influence the bidding process to the detriment of Owner, (b) to establish bid prices at artificial non-competitive levels, or (c) to deprive Owner of the benefits of free and open competition.
   c. Collusive practice means a scheme or arrangement between two or more Bidders, with or without the knowledge of Owner, a purpose of which is to establish bid prices at artificial, non-competitive levels.
   d. Coercive practice means harming or threatening to harm, directly or indirectly, persons or their property to influence their participation in the bidding process or affect the execution of the Contract.

Copyright© 2018 National Society of Professional Engineers, American Council of Engineering Companies, and American Society of Civil Engineers. All rights reserved.

BIDDER hereby submits this Bid as set forth above:

Bidder:

_____

(typed or printed name of organization)

By: _____

(individual's signature)

Name: _____

(typed or printed)

Title: _____

(typed or printed)

Date: _____

(typed or printed)

If Bidder is a corporation, a partnership, or a joint venture, attach evidence of authority to sign.

Attest: _____

(individual's signature)

Name: _____

(typed or printed)

Title: _____

(typed or printed)

Date: _____

(typed or printed)

Address for giving notices:

_____

_____

Bidder's Contact:

Name: _____

(typed or printed)

Title: _____

(typed or printed)

Phone: _____

Email: _____

Address:

_____

_____

_____

Bidder's Contractor License No.: (if applicable) _____

EJCDC® C-410, Bid Form for Construction Contract.
Copyright© 2018 National Society of Professional Engineers, American Council of Engineering Companies, and American Society of Civil Engineers. All rights reserved.

SECTION 00 43 12 BID BOND (PENAL SUM FORM)

Bidder	**Surety**
Name:	Name:
Address *(principal place of business)*:	Address *(principal place of business)*:
Owner	**Bid**
Name: **City and Borough of Wrangell** **205 Brueger Street** **Wrangell, Alaska 99929**	Project: Wrangell Water Treatment Plant Bid Due Date: **July 19, 2023**
Bond	
Penal Sum:	
Date of Bond:	

Surety and Bidder, intending to be legally bound hereby, subject to the terms set forth in this Bid Bond, do each cause this Bid Bond to be duly executed by an authorized officer, agent, or representative.

Bidder	Surety
_____ *(Full formal name of Bidder)*	_____ *(Full formal name of Surety) (corporate seal)*
By: _____ *(Signature)*	By: _____ *(Signature) (Attach Power of Attorney)*
Name: _____ *(Printed or typed)*	Name: _____ *(Printed or typed)*
Title: _____	Title: _____
Attest: _____ *(Signature)*	Attest: _____ *(Signature)*
Name: _____ *(Printed or typed)*	Name: _____ *(Printed or typed)*
Title:	Title:

Notes: (1) Note: Addresses are to be used for giving any required notice. (2) Provide execution by any additional parties, such as joint venturers, if necessary.

EJCDC® C-430, Bid Bond (Penal Sum Form).
Copyright© 2018 National Society of Professional Engineers, American Council of Engineering Companies, and American Society of Civil Engineers. All rights reserved.

1. Bidder and Surety, jointly and severally, bind themselves, their heirs, executors, administrators, successors, and assigns to pay to Owner upon default of Bidder the penal sum set forth on the face of this Bond. Payment of the penal sum is the extent of Bidder's and Surety's liability. Recovery of such penal sum under the terms of this Bond will be Owner's sole and exclusive remedy upon default of Bidder.
2. Default of Bidder occurs upon the failure of Bidder to deliver within the time required by the Bidding Documents (or any extension thereof agreed to in writing by Owner) the executed Agreement required by the Bidding Documents and any performance and payment bonds required by the Bidding Documents.
3. This obligation will be null and void if:
    3.1. Owner accepts Bidder's Bid and Bidder delivers within the time required by the Bidding Documents (or any extension thereof agreed to in writing by Owner) the executed Agreement required by the Bidding Documents and any performance and payment bonds required by the Bidding Documents, or
    3.2. All Bids are rejected by Owner, or
    3.3. Owner fails to issue a Notice of Award to Bidder within the time specified in the Bidding Documents (or any extension thereof agreed to in writing by Bidder and, if applicable, consented to by Surety when required by Paragraph 5 hereof).
4. Payment under this Bond will be due and payable upon default of Bidder and within 30 calendar days after receipt by Bidder and Surety of written notice of default from Owner, which notice will be given with reasonable promptness, identifying this Bond and the Project and including a statement of the amount due.
5. Surety waives notice of any and all defenses based on or arising out of any time extension to issue Notice of Award agreed to in writing by Owner and Bidder, provided that the total time for issuing Notice of Award including extensions does not in the aggregate exceed 120 days from the Bid due date without Surety's written consent.
6. No suit or action will be commenced under this Bond prior to 30 calendar days after the notice of default required in Paragraph 4 above is received by Bidder and Surety, and in no case later than one year after the Bid due date.
7. Any suit or action under this Bond will be commenced only in a court of competent jurisdiction located in the state in which the Project is located.
8. Notices required hereunder must be in writing and sent to Bidder and Surety at their respective addresses shown on the face of this Bond. Such notices may be sent by personal delivery, commercial courier, or by United States Postal Service registered or certified mail, return receipt requested, postage pre-paid, and will be deemed to be effective upon receipt by the party concerned.
9. Surety shall cause to be attached to this Bond a current and effective Power of Attorney evidencing the authority of the officer, agent, or representative who executed this Bond on behalf of Surety to execute, seal, and deliver such Bond and bind the Surety thereby.
10. This Bond is intended to conform to all applicable statutory requirements. Any applicable requirement of any applicable statute that has been omitted from this Bond will be deemed to be included herein as if set forth at length. If any provision of this Bond conflicts with any applicable statute, then the provision of said statute governs and the remainder of this Bond that is not in conflict therewith continues in full force and effect.
11. The term "Bid" as used herein includes a Bid, offer, or proposal as applicable.

Copyright© 2018 National Society of Professional Engineers, American Council of Engineering Companies, and American Society of Civil Engineers. All rights reserved.

SECTION 00 52 13

AGREEMENT BETWEEN OWNER AND CONTRACTOR FOR CONSTRUCTION CONTRACT (STIPULATED PRICE)

This Agreement is by and between **City and Borough of Wrangell** ("Owner") and _____ ("Contractor").

Terms used in this Agreement have the meanings stated in the General Conditions and the Supplementary Conditions.

Owner and Contractor hereby agree as follows:

ARTICLE 1—WORK

1.01 Contractor shall complete all Work as specified or indicated in the Contract Documents. The Work is generally described as follows: **All materials, equipment, labor and related services to construct and commission the Wrangell Water Treatment Plant under Article 2 and in the Contract Documents.**

ARTICLE 2—THE PROJECT

2.01 The Project, of which the Work under the Contract Documents is a part, is generally described as follows: **The project scope consists of modifications to the existing water treatment plant and construction of a new water treatment plant building. Modifications to the existing treatment plant include conversion of the slow sand filters into a chlorine contact chamber, conversion of the roughing filters into a backwash equalization basin, demolition of an existing ozonation system, and conversion of the existing administration building into a support building. The new water treatment plant building will house a Multimedia and Dissolved Air Flotation Treatment System capable of treating 2.26 Million Gallons Per Day (MGD).**

ARTICLE 3—ENGINEER

3.01 The Owner has retained **DOWL, INC.** ("Engineer") to act as Owner's representative, assume all duties and responsibilities of Engineer, and have the rights and authority assigned to Engineer in the Contract.

3.02 The part of the Project that pertains to the Work has been designed by **the Engineer**.

ARTICLE 4—EQUIPMENT MANUFACTURER

4.01 The owner has undergone a procurement process to pre-select the equipment manufacturer, as AWC, Inc. **The Manufacturer** will provide equipment and services through this general contract for services indicated in specification sections 46 21 10 and 46 07 13, for the price as negotiated

EJCDC® C-520, Agreement between Owner and Contractor for Construction Contract (Stipulated Price).
Copyright© 2018 National Society of Professional Engineers, American Council of Engineering Companies, and American Society of Civil Engineers. All rights reserved.

under pay item 104 in the bid form. The Manufacturer shop drawings are included in the supplemental information.

ARTICLE 5—CONTRACT TIMES

5.01 *Time is of the Essence*

A. All time limits for Milestones, if any, Substantial Completion, and completion and readiness for final payment as stated in the Contract Documents are of the essence of the Contract.

5.02 *Contract Times: Dates*

A. The Work will be substantially complete on or before **September 24, 2024**, and completed and ready for final payment in accordance with Paragraph 15.06 of the General Conditions on or before **December 31st, 2024.** The substantial and final completion dates may change based on the awarding of any or all of the additive alternates.

5.04 Deleted

4.05 *Liquidated Damages*

A. Contractor and Owner recognize that time is of the essence as stated in Paragraph 4.01 above and that Owner will suffer financial and other losses if the Work is not completed and Milestones not achieved within the Contract Times, as duly modified. The parties also recognize the delays, expense, and difficulties involved in proving, in a legal or arbitration proceeding, the actual loss suffered by Owner if the Work is not completed on time. Accordingly, instead of requiring any such proof, Owner and Contractor agree that as liquidated damages for delay (but not as a penalty):

1. *Substantial Completion:* Contractor shall pay Owner $**2500.00** for each calendar day that expires after the time (as duly adjusted pursuant to the Contract) specified above for Substantial Completion, until the Work is substantially complete.

2. *Completion of Remaining Work:* After Substantial Completion, if Contractor shall neglect, refuse, or fail to complete the remaining Work within the Contract Times (as duly adjusted pursuant to the Contract) for completion and readiness for final payment, Contractor shall pay Owner $**250.00** for each calendar day that expires after such time until the Work is completed and ready for final payment.

3. Deleted

4. Liquidated damages for failing to timely attain Milestones, Substantial Completion, and final completion are not additive, and will not be imposed concurrently.

B. If Owner recovers liquidated damages for a delay in completion by Contractor, then such liquidated damages are Owner's sole and exclusive remedy for such delay, and Owner is precluded from recovering any other damages, whether actual, direct, excess, or consequential, for such delay, except for special damages (if any) specified in this Agreement.

C. **Deleted**

Copyright© 2018 National Society of Professional Engineers, American Council of Engineering Companies, and American Society of Civil Engineers. All rights reserved.

ARTICLE 6—CONTRACT PRICE

5.01 Owner shall pay Contractor for completion of the Work in accordance with the Contract Documents, and the amounts shown in the Bid Form, subject to adjustment under the Contract.

A. Deleted

B. Deleted

C. Deleted

D. Deleted

ARTICLE 7—PAYMENT PROCEDURES

6.01 *Submittal and Processing of Payments*

A. Contractor shall submit Applications for Payment in accordance with Article 15 of the General Conditions. Applications for Payment will be processed by Engineer as provided in the General Conditions.

6.02 *Progress Payments; Retainage*

A. Owner shall make progress payments on the basis of Contractor's Applications for Payment on or about the 1st (first) day of each month during performance of the Work as provided in Paragraph 6.02.A.1 below, provided that such Applications for Payment have been submitted in a timely manner and otherwise meet the requirements of the Contract. All such payments will be measured by the Schedule of Values established as provided in the General Conditions (and in the case of Unit Price Work based on the number of units completed) or, in the event there is no Schedule of Values, as provided elsewhere in the Contract.

1. Prior to Substantial Completion, progress payments will be made in an amount equal to the percentage indicated below but, in each case, less the aggregate of payments previously made and less such amounts as Owner may withhold, including but not limited to liquidated damages, in accordance with the Contract.

a. **95** percent of the value of the Work completed (with the balance being retainage).

1) **Deleted**

b. **95** percent of cost of materials and equipment not incorporated in the Work (with the balance being retainage).

B. Upon Substantial Completion **of the entire construction to be provided under the construction Contract Documents**, Owner shall pay an amount sufficient to increase total payments to Contractor to **100** percent of the Work completed, less such amounts set off by Owner pursuant to Paragraph 15.01.E of the General Conditions, and less **200** percent of Engineer's estimate of the value of Work to be completed or corrected as shown on the punch list of items to be completed or corrected prior to final payment.

6.03 *Final Payment*

A. Upon final completion and acceptance of the Work, Owner shall pay the remainder of the Contract Price in accordance with Paragraph 15.06 of the General Conditions.

Copyright© 2018 National Society of Professional Engineers, American Council of Engineering Companies, and American Society of Civil Engineers. All rights reserved.

6.04 *Consent of Surety*

A. Owner will not make final payment, or return or release retainage at Substantial Completion or any other time, unless Contractor submits written consent of the surety to such payment, return, or release.

6.05 *Interest*

A. All amounts not paid when due will bear interest at the rate of **8** percent per annum.

ARTICLE 8—CONTRACT DOCUMENTS

7.01 *Contents*

A. The Contract Documents consist of all of the following:

1. This Agreement.
2. Bonds:
    a. Performance bond (together with power of attorney).
    b. Payment bond (together with power of attorney).
3. General Conditions.
4. Supplementary Conditions.
5. Specifications as listed in the table of contents of the project manual.
6. Drawings (not attached but incorporated by reference) consisting of **214** sheets with each sheet bearing the following general title: **Wrangell Water Treatment Plant Improvements.**
7. Addenda (numbers _____ to _____, inclusive).
9. Exhibits to this Agreement (enumerated as follows):
    1) *Wrangell Water Treatment Plant Design Geotechnical Investigation* dated June 7, 2022 by DOWL
    2) AWC Shop Drawings
10. The following which may be delivered or issued on or after the Effective Date of the Contract and are not attached hereto:
    a. Notice to Proceed.
    b. Work Change Directives.
    c. Change Orders.
    d. Field Orders.
    e. Warranty Bond, if any.

B. The Contract Documents listed in Paragraph 7.01.A are attached to this Agreement (except as expressly noted otherwise above).

C. There are no Contract Documents other than those listed above in this Article 7.

Copyright© 2018 National Society of Professional Engineers, American Council of Engineering Companies, and American Society of Civil Engineers. All rights reserved.

D. The Contract Documents may only be amended, modified, or supplemented as provided in the Contract.

ARTICLE 9—REPRESENTATIONS, CERTIFICATIONS, AND STIPULATIONS

8.01 *Contractor's Representations*

A. In order to induce Owner to enter into this Contract, Contractor makes the following representations:

1. Contractor has examined and carefully studied the Contract Documents, including Addenda.

2. Contractor has visited the Site, conducted a thorough visual examination of the Site and adjacent areas, and become familiar with the general, local, and Site conditions that may affect cost, progress, and performance of the Work.

3. Contractor is familiar with all Laws and Regulations that may affect cost, progress, and performance of the Work.

4. Contractor has carefully studied the reports of explorations and tests of subsurface conditions at or adjacent to the Site and the drawings of physical conditions relating to existing surface or subsurface structures at the Site that have been identified in the Supplementary Conditions, with respect to the Technical Data in such reports and drawings.

5. Deleted.

6. Contractor has considered the information known to Contractor itself; information commonly known to contractors doing business in the locality of the Site; information and observations obtained from visits to the Site; the Contract Documents; and the Technical Data identified in the Supplementary Conditions or by definition, with respect to the effect of such information, observations, and Technical Data on (a) the cost, progress, and performance of the Work; (b) the means, methods, techniques, sequences, and procedures of construction to be employed by Contractor; and (c) Contractor's safety precautions and programs.

7. Based on the information and observations referred to in the preceding paragraph, Contractor agrees that no further examinations, investigations, explorations, tests, studies, or data are necessary for the performance of the Work at the Contract Price, within the Contract Times, and in accordance with the other terms and conditions of the Contract.

8. Contractor is aware of the general nature of work to be performed by Owner and others at the Site that relates to the Work as indicated in the Contract Documents.

9. Contractor has given Engineer written notice of all conflicts, errors, ambiguities, or discrepancies that Contractor has discovered in the Contract Documents, and of discrepancies between Site conditions and the Contract Documents, and the written resolution thereof by Engineer is acceptable to Contractor.

10. The Contract Documents are generally sufficient to indicate and convey understanding of all terms and conditions for performance and furnishing of the Work.

Copyright© 2018 National Society of Professional Engineers, American Council of Engineering Companies, and American Society of Civil Engineers. All rights reserved.

11. Contractor's entry into this Contract constitutes an incontrovertible representation by Contractor that without exception all prices in the Agreement are premised upon performing and furnishing the Work required by the Contract Documents.

8.02 *Contractor's Certifications*

A. Contractor certifies that it has not engaged in corrupt, fraudulent, collusive, or coercive practices in competing for or in executing the Contract. For the purposes of this Paragraph 8.02:

1. "corrupt practice" means the offering, giving, receiving, or soliciting of anything of value likely to influence the action of a public official in the bidding process or in the Contract execution;

2. "fraudulent practice" means an intentional misrepresentation of facts made (a) to influence the bidding process or the execution of the Contract to the detriment of Owner, (b) to establish Bid or Contract prices at artificial non-competitive levels, or (c) to deprive Owner of the benefits of free and open competition;

3. "collusive practice" means a scheme or arrangement between two or more Bidders, with or without the knowledge of Owner, a purpose of which is to establish Bid prices at artificial, non-competitive levels; and

4. "coercive practice" means harming or threatening to harm, directly or indirectly, persons or their property to influence their participation in the bidding process or affect the execution of the Contract.

8.03 *Standard General Conditions*

A. Owner stipulates that if the General Conditions that are made a part of this Contract are EJCDC® C-700, Standard General Conditions for the Construction Contract (2018), published by the Engineers Joint Contract Documents Committee, and if Owner is the party that has furnished said General Conditions, then Owner has plainly shown all modifications to the standard wording of such published document to the Contractor, through a process such as highlighting or "track changes" (redline/strikeout), or in the Supplementary Conditions.

Copyright© 2018 National Society of Professional Engineers, American Council of Engineering Companies, and American Society of Civil Engineers. All rights reserved.

IN WITNESS WHEREOF, Owner and Contractor have signed this Agreement.

This Agreement will be effective on _____(which is the Effective Date of the Contract).

Owner:	Contractor:
City and Borough of Wrangell *(typed or printed name of organization)*	_____ *(typed or printed name of organization)*
By: _____ *(individual's signature)*	By: _____ *(individual's signature)*
Date: _____ *(date signed)*	Date: _____ *(date signed)*
Name: _____ *(typed or printed)*	Name: _____ *(typed or printed)*
Title: _____ *(typed or printed)*	Title: _____ *(typed or printed)* *(If **[Type of Entity]** is a corporation, a partnership, or a joint venture, attach evidence of authority to sign.)*
Attest: _____ *(individual's sianature)*	Attest: _____ *(individual's sianature)*
Title: _____ *(typed or printed)*	Title: _____ *(typed or printed)*
Address for giving notices:	Address for giving notices:
Designated Representative:	Designated Representative:
Name: _____ *(typed or printed)*	Name: _____ *(typed or printed)*
Title: _____ *(typed or printed)*	Title: _____ *(typed or printed)*
Address:	Address:
Phone: _____	Phone: _____
Email: _____ *(If **[Type of Entity]** is a corporation, attach evidence of authority to sign. If **[Type of Entity]** is a public body, attach evidence of authority to sign and resolution or other	Email: _____ License No.: _____ *(where applicable)* State: _____

Copyright© 2018 National Society of Professional Engineers, American Council of Engineering Companies, and American Society of Civil Engineers. All rights reserved.

SECTION 00 61.13.13
PERFORMANCE BOND

Contractor	**Surety**
Name:	Name:
Address *(principal place of business)*:	Address *(principal place of business)*:
Owner	**Contract**
Name: **City and Borough of Wrangell**	Description *(name and location)*:
Mailing address *(principal place of business)*:	
PO Box 531	
Wrangell, AK 99929	Contract Price:
	Effective Date of Contract:

Bond

Bond Amount:

Date of Bond:

(Date of Bond cannot be earlier than Effective Date of Contract)

Modifications to this Bond form:

☐ None ☐ See Paragraph 16

Surety and Contractor, intending to be legally bound hereby, subject to the terms set forth in this Performance Bond, do each cause this Performance Bond to be duly executed by an authorized officer, agent, or representative.

Contractor as Principal	Surety
(Full formal name of Contractor)	*(Full formal name of Surety) (corporate seal)*
By: _____ *(Signature)*	By: _____ *(Signature)(Attach Power of Attorney)*
Name: _____ *(Printed or typed)*	Name: _____ *(Printed or typed)*
Title: _____	Title: _____
Attest: _____ *(Signature)*	Attest: _____ *(Signature)*
Name: _____ *(Printed or typed)*	Name: _____ *(Printed or typed)*
Title: _____	Title: _____

Notes: (1) Provide supplemental execution by any additional parties, such as joint venturers. (2) Any singular reference to Contractor, Surety, Owner, or other party is considered plural where applicable.

EJCDC® C-610, Performance Bond.
Copyright© 2018 National Society of Professional Engineers, American Council of Engineering Companies, and American Society of Civil Engineers. All rights reserved.

1. The Contractor and Surety, jointly and severally, bind themselves, their heirs, executors, administrators, successors, and assigns to the Owner for the performance of the Construction Contract, which is incorporated herein by reference.

2. If the Contractor performs the Construction Contract, the Surety and the Contractor shall have no obligation under this Bond, except when applicable to participate in a conference as provided in Paragraph 3.

3. If there is no Owner Default under the Construction Contract, the Surety's obligation under this Bond will arise after:

    3.1. The Owner first provides notice to the Contractor and the Surety that the Owner is considering declaring a Contractor Default. Such notice may indicate whether the Owner is requesting a conference among the Owner, Contractor, and Surety to discuss the Contractor's performance. If the Owner does not request a conference, the Surety may, within five (5) business days after receipt of the Owner's notice, request such a conference. If the Surety timely requests a conference, the Owner shall attend. Unless the Owner agrees otherwise, any conference requested under this Paragraph 3.1 will be held within ten (10) business days of the Surety's receipt of the Owner's notice. If the Owner, the Contractor, and the Surety agree, the Contractor shall be allowed a reasonable time to perform the Construction Contract, but such an agreement does not waive the Owner's right, if any, subsequently to declare a Contractor Default;

    3.2. The Owner declares a Contractor Default, terminates the Construction Contract and notifies the Surety; and

    3.3. The Owner has agreed to pay the Balance of the Contract Price in accordance with the terms of the Construction Contract to the Surety or to a contractor selected to perform the Construction Contract.

4. Failure on the part of the Owner to comply with the notice requirement in Paragraph 3.1 does not constitute a failure to comply with a condition precedent to the Surety's obligations, or release the Surety from its obligations, except to the extent the Surety demonstrates actual prejudice.

5. When the Owner has satisfied the conditions of Paragraph 3, the Surety shall promptly and at the Surety's expense take one of the following actions:

    5.1. Arrange for the Contractor, with the consent of the Owner, to perform and complete the Construction Contract;

    5.2. Undertake to perform and complete the Construction Contract itself, through its agents or independent contractors;

    5.3. Obtain bids or negotiated proposals from qualified contractors acceptable to the Owner for a contract for performance and completion of the Construction Contract, arrange for a contract to be prepared for execution by the Owner and a contractor selected with the Owners concurrence, to be secured with performance and payment bonds executed by a qualified surety equivalent to the bonds issued on the Construction Contract, and pay to the Owner the amount of damages as described in Paragraph 7 in excess of the Balance of the Contract Price incurred by the Owner as a result of the Contractor Default; or

    5.4. Waive its right to perform and complete, arrange for completion, or obtain a new contractor, and with reasonable promptness under the circumstances:

Copyright© 2018 National Society of Professional Engineers, American Council of Engineering Companies, and American Society of Civil Engineers. All rights reserved.

5.4.1 After investigation, determine the amount for which it may be liable to the Owner and, as soon as practicable after the amount is determined, make payment to the Owner; or

5.4.2 Deny liability in whole or in part and notify the Owner, citing the reasons for denial.

6. If the Surety does not proceed as provided in Paragraph 5 with reasonable promptness, the Surety shall be deemed to be in default on this Bond seven days after receipt of an additional written notice from the Owner to the Surety demanding that the Surety perform its obligations under this Bond, and the Owner shall be entitled to enforce any remedy available to the Owner. If the Surety proceeds as provided in Paragraph 5.4, and the Owner refuses the payment, or the Surety has denied liability, in whole or in part, without further notice, the Owner shall be entitled to enforce any remedy available to the Owner.

7. If the Surety elects to act under Paragraph 5.1, 5.2, or 5.3, then the responsibilities of the Surety to the Owner will not be greater than those of the Contractor under the Construction Contract, and the responsibilities of the Owner to the Surety will not be greater than those of the Owner under the Construction Contract. Subject to the commitment by the Owner to pay the Balance of the Contract Price, the Surety is obligated, without duplication for:

   7.1. the responsibilities of the Contractor for correction of defective work and completion of the Construction Contract;

   7.2. additional legal, design professional, and delay costs resulting from the Contractor's Default, and resulting from the actions or failure to act of the Surety under Paragraph 5; and

   7.3. liquidated damages, or if no liquidated damages are specified in the Construction Contract, actual damages caused by delayed performance or non-performance of the Contractor.

8. If the Surety elects to act under Paragraph 5.1, 5.3, or 5.4, the Surety's liability is limited to the amount of this Bond.

9. The Surety shall not be liable to the Owner or others for obligations of the Contractor that are unrelated to the Construction Contract, and the Balance of the Contract Price will not be reduced or set off on account of any such unrelated obligations. No right of action will accrue on this Bond to any person or entity other than the Owner or its heirs, executors, administrators, successors, and assigns.

10. The Surety hereby waives notice of any change, including changes of time, to the Construction Contract or to related subcontracts, purchase orders, and other obligations.

11. Any proceeding, legal or equitable, under this Bond must be instituted in any court of competent jurisdiction in the location in which the work or part of the work is located and must be instituted within two years after a declaration of Contractor Default or within two years after the Contractor ceased working or within two years after the Surety refuses or fails to perform its obligations under this Bond, whichever occurs first. If the provisions of this paragraph are void or prohibited by law, the minimum periods of limitations available to sureties as a defense in the jurisdiction of the suit will be applicable.

12. Notice to the Surety, the Owner, or the Contractor must be mailed or delivered to the address shown on the page on which their signature appears.

13. When this Bond has been furnished to comply with a statutory or other legal requirement in the location where the construction was to be performed, any provision in this Bond conflicting with said statutory or legal requirement will be deemed deleted therefrom and provisions conforming to such

Copyright© 2018 National Society of Professional Engineers, American Council of Engineering Companies, and American Society of Civil Engineers. All rights reserved.

statutory or other legal requirement will be deemed incorporated herein. When so furnished, the intent is that this Bond will be construed as a statutory bond and not as a common law bond.

14. Definitions

    14.1. *Balance of the Contract Price*—The total amount payable by the Owner to the Contractor under the Construction Contract after all proper adjustments have been made including allowance for the Contractor for any amounts received or to be received by the Owner in settlement of insurance or other claims for damages to which the Contractor is entitled, reduced by all valid and proper payments made to or on behalf of the Contractor under the Construction Contract.

    14.2. *Construction Contract*—The agreement between the Owner and Contractor identified on the cover page, including all Contract Documents and changes made to the agreement and the Contract Documents.

    14.3. *Contractor Default*—Failure of the Contractor, which has not been remedied or waived, to perform or otherwise to comply with a material term of the Construction Contract.

    14.4. *Owner Default*—Failure of the Owner, which has not been remedied or waived, to pay the Contractor as required under the Construction Contract or to perform and complete or comply with the other material terms of the Construction Contract.

    14.5. *Contract Documents*—All the documents that comprise the agreement between the Owner and Contractor.

15. If this Bond is issued for an agreement between a contractor and subcontractor, the term Contractor in this Bond will be deemed to be Subcontractor and the term Owner will be deemed to be Contractor.

16. Modifications to this Bond are as follows: **None**

Copyright© 2018 National Society of Professional Engineers, American Council of Engineering Companies, and American Society of Civil Engineers. All rights reserved.

SECTION 00 61 13.16
PAYMENT BOND

Contractor	**Surety**
Name:	Name:
Address *(principal place of business)*:	Address *(principal place of business)*:
Owner	**Contract**
Name: **City and Borough of Wrangell**	Description *(name and location)*:
Mailing address *(principal place of business)*: **PO Box 531 Wrangell, AK 99929**	Contract Price:
	Effective Date of Contract:

Bond

Bond Amount:

Date of Bond:

(Date of Bond cannot be earlier than Effective Date of Contract)

Modifications to this Bond form:

☐ None ☐ See Paragraph 18

Surety and Contractor, intending to be legally bound hereby, subject to the terms set forth in this Payment Bond, do each cause this Payment Bond to be duly executed by an authorized officer, agent, or representative.

Contractor as Principal	Surety
(Full formal name of Contractor)	*(Full formal name of Surety) (corporate seal)*
By: _____ *(Signature)*	By: _____ *(Signature)(Attach Power of Attorney)*
Name: _____ *(Printed or typed)*	Name: _____ *(Printed or typed)*
Title: _____	Title: _____
Attest: _____ *(Signature)*	Attest: _____ *(Signature)*
Name: _____ *(Printed or typed)*	Name: _____ *(Printed or typed)*
Title: _____	Title: _____

Notes: (1) Provide supplemental execution by any additional parties, such as joint venturers. (2) Any singular reference to Contractor, Surety, Owner, or other party is considered plural where applicable.

EJCDC® C-615, Payment Bond.
Copyright© 2018 National Society of Professional Engineers, American Council of Engineering Companies, and American Society of Civil Engineers. All rights reserved.

1. The Contractor and Surety, jointly and severally, bind themselves, their heirs, executors, administrators, successors, and assigns to the Owner to pay for labor, materials, and equipment furnished for use in the performance of the Construction Contract, which is incorporated herein by reference, subject to the following terms.

2. If the Contractor promptly makes payment of all sums due to Claimants, and defends, indemnifies, and holds harmless the Owner from claims, demands, liens, or suits by any person or entity seeking payment for labor, materials, or equipment furnished for use in the performance of the Construction Contract, then the Surety and the Contractor shall have no obligation under this Bond.

3. If there is no Owner Default under the Construction Contract, the Surety's obligation to the Owner under this Bond will arise after the Owner has promptly notified the Contractor and the Surety (at the address described in Paragraph 13) of claims, demands, liens, or suits against the Owner or the Owner's property by any person or entity seeking payment for labor, materials, or equipment furnished for use in the performance of the Construction Contract, and tendered defense of such claims, demands, liens, or suits to the Contractor and the Surety.

4. When the Owner has satisfied the conditions in Paragraph 3, the Surety shall promptly and at the Surety's expense defend, indemnify, and hold harmless the Owner against a duly tendered claim, demand, lien, or suit.

5. The Surety's obligations to a Claimant under this Bond will arise after the following:

    5.1. Claimants who do not have a direct contract with the Contractor

        5.1.1. have furnished a written notice of non-payment to the Contractor, stating with substantial accuracy the amount claimed and the name of the party to whom the materials were, or equipment was, furnished or supplied or for whom the labor was done or performed, within ninety (90) days after having last performed labor or last furnished materials or equipment included in the Claim; and

        5.1.2. have sent a Claim to the Surety (at the address described in Paragraph 13).

    5.2. Claimants who are employed by or have a direct contract with the Contractor have sent a Claim to the Surety (at the address described in Paragraph 13).

6. If a notice of non-payment required by Paragraph 5.1.1 is given by the Owner to the Contractor, that is sufficient to satisfy a Claimant's obligation to furnish a written notice of non-payment under Paragraph 5.1.1.

7. When a Claimant has satisfied the conditions of Paragraph 5.1 or 5.2, whichever is applicable, the Surety shall promptly and at the Surety's expense take the following actions:

    7.1. Send an answer to the Claimant, with a copy to the Owner, within sixty (60) days after receipt of the Claim, stating the amounts that are undisputed and the basis for challenging any amounts that are disputed; and

    7.2. Pay or arrange for payment of any undisputed amounts.

    7.3. The Surety's failure to discharge its obligations under Paragraph 7.1 or 7.2 will not be deemed to constitute a waiver of defenses the Surety or Contractor may have or acquire as to a Claim, except as to undisputed amounts for which the Surety and Claimant have reached agreement. If, however, the Surety fails to discharge its obligations under Paragraph 7.1 or 7.2, the Surety shall indemnify the Claimant for the reasonable attorney's fees the Claimant incurs thereafter to recover any sums found to be due and owing to the Claimant.

Copyright© 2018 National Society of Professional Engineers, American Council of Engineering Companies, and American Society of Civil Engineers. All rights reserved.

8. The Surety's total obligation will not exceed the amount of this Bond, plus the amount of reasonable attorney's fees provided under Paragraph 7.3, and the amount of this Bond will be credited for any payments made in good faith by the Surety.

9. Amounts owed by the Owner to the Contractor under the Construction Contract will be used for the performance of the Construction Contract and to satisfy claims, if any, under any construction performance bond. By the Contractor furnishing and the Owner accepting this Bond, they agree that all funds earned by the Contractor in the performance of the Construction Contract are dedicated to satisfying obligations of the Contractor and Surety under this Bond, subject to the Owner's priority to use the funds for the completion of the work.

10. The Surety shall not be liable to the Owner, Claimants, or others for obligations of the Contractor that are unrelated to the Construction Contract. The Owner shall not be liable for the payment of any costs or expenses of any Claimant under this Bond, and shall have under this Bond no obligation to make payments to or give notice on behalf of Claimants, or otherwise have any obligations to Claimants under this Bond.

11. The Surety hereby waives notice of any change, including changes of time, to the Construction Contract or to related subcontracts, purchase orders, and other obligations.

12. No suit or action will be commenced by a Claimant under this Bond other than in a court of competent jurisdiction in the state in which the project that is the subject of the Construction Contract is located or after the expiration of one year from the date (1) on which the Claimant sent a Claim to the Surety pursuant to Paragraph 5.1.2 or 5.2, or (2) on which the last labor or service was performed by anyone or the last materials or equipment were furnished by anyone under the Construction Contract, whichever of (1) or (2) first occurs. If the provisions of this paragraph are void or prohibited by law, the minimum period of limitation available to sureties as a defense in the jurisdiction of the suit will be applicable.

13. Notice and Claims to the Surety, the Owner, or the Contractor must be mailed or delivered to the address shown on the page on which their signature appears. Actual receipt of notice or Claims, however accomplished, will be sufficient compliance as of the date received.

14. When this Bond has been furnished to comply with a statutory or other legal requirement in the location where the construction was to be performed, any provision in this Bond conflicting with said statutory or legal requirement will be deemed deleted here from and provisions conforming to such statutory or other legal requirement will be deemed incorporated herein. When so furnished, the intent is that this Bond will be construed as a statutory bond and not as a common law bond.

15. Upon requests by any person or entity appearing to be a potential beneficiary of this Bond, the Contractor and Owner shall promptly furnish a copy of this Bond or shall permit a copy to be made.

16. Definitions

    16.1. *Claim*—A written statement by the Claimant including at a minimum:

        16.1.1. The name of the Claimant;

        16.1.2. The name of the person for whom the labor was done, or materials or equipment furnished;

        16.1.3. A copy of the agreement or purchase order pursuant to which labor, materials, or equipment was furnished for use in the performance of the Construction Contract;

        16.1.4. A brief description of the labor, materials, or equipment furnished;

Copyright© 2018 National Society of Professional Engineers, American Council of Engineering Companies, and American Society of Civil Engineers. All rights reserved.

16.1.5. The date on which the Claimant last performed labor or last furnished materials or equipment for use in the performance of the Construction Contract;

16.1.6. The total amount earned by the Claimant for labor, materials, or equipment furnished as of the date of the Claim;

16.1.7. The total amount of previous payments received by the Claimant; and

16.1.8. The total amount due and unpaid to the Claimant for labor, materials, or equipment furnished as of the date of the Claim.

16.2. *Claimant*—An individual or entity having a direct contract with the Contractor or with a subcontractor of the Contractor to furnish labor, materials, or equipment for use in the performance of the Construction Contract. The term Claimant also includes any individual or entity that has rightfully asserted a claim under an applicable mechanic's lien or similar statute against the real property upon which the Project is located. The intent of this Bond is to include without limitation in the terms of "labor, materials, or equipment" that part of the water, gas, power, light, heat, oil, gasoline, telephone service, or rental equipment used in the Construction Contract, architectural and engineering services required for performance of the work of the Contractor and the Contractor's subcontractors, and all other items for which a mechanic's lien may be asserted in the jurisdiction where the labor, materials, or equipment were furnished.

16.3. *Construction Contract*—The agreement between the Owner and Contractor identified on the cover page, including all Contract Documents and all changes made to the agreement and the Contract Documents.

16.4. *Owner Default*—Failure of the Owner, which has not been remedied or waived, to pay the Contractor as required under the Construction Contract or to perform and complete or comply with the other material terms of the Construction Contract.

16.5. *Contract Documents*—All the documents that comprise the agreement between the Owner and Contractor.

17. If this Bond is issued for an agreement between a contractor and subcontractor, the term Contractor in this Bond will be deemed to be Subcontractor and the term Owner will be deemed to be Contractor.

18. Modifications to this Bond are as follows: **None**

Copyright© 2018 National Society of Professional Engineers, American Council of Engineering Companies, and American Society of Civil Engineers. All rights reserved.

SECTION 00 72 13
STANDARD GENERAL CONDITIONS
OF THE CONSTRUCTION CONTRACT

Prepared By

EJCDC® C-700, Standard General Conditions of the Construction Contract.
Copyright© 2018 National Society of Professional Engineers, American Council of Engineering Companies, and American Society of Civil Engineers. All rights reserved.

Copyright© 2018

National Society of Professional Engineers

1420 King Street, Alexandria, VA 22314-2794

(703) 684-2882

www.nspe.org

American Council of Engineering Companies

1015 15th Street N.W., Washington, DC 20005

(202) 347-7474

www.acec.org

American Society of Civil Engineers

1801 Alexander Bell Drive, Reston, VA 20191-4400

(800) 548-2723

www.asce.org

The copyright for this EJCDC document is owned jointly by the three sponsoring organizations listed above. The National Society of Professional Engineers is the Copyright Administrator for the EJCDC documents; please direct all inquiries regarding EJCDC copyrights to NSPE.

NOTE: EJCDC publications may be purchased at www.ejcdc.org, or from any of the sponsoring organizations above.

STANDARD GENERAL CONDITIONS OF THE CONSTRUCTION CONTRACT

TABLE OF CONTENTS

Page

Article 1—Definitions and Terminology 1
1.01 Defined Terms 1
1.02 Terminology 6
Article 2—Preliminary Matters 7
2.01 Delivery of Performance and Payment Bonds; Evidence of Insurance 7
2.02 Copies of Documents 7
2.03 Before Starting Construction 7
2.04 Preconstruction Conference; Designation of Authorized Representatives 8
2.05 Acceptance of Schedules 8
2.06 Electronic Transmittals 8
Article 3—Contract Documents: Intent, Requirements, Reuse 9
3.01 Intent 9
3.02 Reference Standards 9
3.03 Reporting and Resolving Discrepancies 10
3.04 Requirements of the Contract Documents 10
3.05 Reuse of Documents 11
Article 4—Commencement and Progress of the Work 11
4.01 Commencement of Contract Times; Notice to Proceed 11
4.02 Starting the Work 11
4.03 Reference Points 11
4.04 Progress Schedule 12
4.05 Delays in Contractor's Progress 12
Article 5—Site; Subsurface and Physical Conditions; Hazardous Environmental Conditions 13
5.01 Availability of Lands 13
5.02 Use of Site and Other Areas 14
5.03 Subsurface and Physical Conditions 15
5.04 Differing Subsurface or Physical Conditions 16

Copyright© 2018 National Society of Professional Engineers, American Council of Engineering Companies, and American Society of Civil Engineers. All rights reserved.

5.05 Underground Facilities....17
5.06 Hazardous Environmental Conditions at Site....19
Article 6—Bonds and Insurance....21
6.01 Performance, Payment, and Other Bonds....21
6.02 Insurance—General Provisions....22
6.03 Contractor's Insurance....24
6.04 Builder's Risk and Other Property Insurance....25
6.05 Property Losses; Subrogation....25
6.06 Receipt and Application of Property Insurance Proceeds....27
Article 7—Contractor's Responsibilities....27
7.01 Contractor's Means and Methods of Construction....27
7.02 Supervision and Superintendence....27
7.03 Labor; Working Hours....27
7.04 Services, Materials, and Equipment....28
7.05 "Or Equals"....28
7.06 Substitutes....29
7.07 Concerning Subcontractors and Suppliers....31
7.08 Patent Fees and Royalties....32
7.09 Permits....33
7.10 Taxes....33
7.11 Laws and Regulations....33
7.12 Record Documents....33
7.13 Safety and Protection....34
7.14 Hazard Communication Programs....35
7.15 Emergencies....35
7.16 Submittals....35
7.17 Contractor's General Warranty and Guarantee....38
7.18 Indemnification....39
7.19 Delegation of Professional Design Services....39
Article 8—Other Work at the Site....40
8.01 Other Work....40
8.02 Coordination....41
8.03 Legal Relationships....41

Copyright© 2018 National Society of Professional Engineers, American Council of Engineering Companies, and American Society of Civil Engineers. All rights reserved.

Article 9—Owner's Responsibilities....42
9.01 Communications to Contractor....42
9.02 Replacement of Engineer....42
9.03 Furnish Data....42
9.04 Pay When Due....42
9.05 Lands and Easements; Reports, Tests, and Drawings....43
9.06 Insurance....43
9.07 Change Orders....43
9.08 Inspections, Tests, and Approvals....43
9.09 Limitations on Owner's Responsibilities....43
9.10 Undisclosed Hazardous Environmental Condition....43
9.11 Evidence of Financial Arrangements....43
9.12 Safety Programs....43
Article 10—Engineer's Status During Construction....44
10.01 Owner's Representative....44
10.02 Visits to Site....44
10.03 Resident Project Representative....44
10.04 Engineer's Authority....44
10.05 Determinations for Unit Price Work....45
10.06 Decisions on Requirements of Contract Documents and Acceptability of Work....45
10.07 Limitations on Engineer's Authority and Responsibilities....45
10.08 Compliance with Safety Program....45
Article 11—Changes to the Contract....46
11.01 Amending and Supplementing the Contract....46
11.02 Change Orders....46
11.03 Work Change Directives....46
11.04 Field Orders....47
11.05 Owner-Authorized Changes in the Work....47
11.06 Unauthorized Changes in the Work....47
11.07 Change of Contract Price....47
11.08 Change of Contract Times....49
11.09 Change Proposals....49
11.10 Notification to Surety....50

Copyright© 2018 National Society of Professional Engineers, American Council of Engineering Companies, and American Society of Civil Engineers. All rights reserved.

Article 12—Claims 50
12.01 Claims 50
Article 13—Cost of the Work; Allowances; Unit Price Work 51
13.01 Cost of the Work 51
13.02 Allowances 55
13.03 Unit Price Work 55
Article 14—Tests and Inspections; Correction, Removal, or Acceptance of Defective Work 56
14.01 Access to Work 56
14.02 Tests, Inspections, and Approvals 56
14.03 Defective Work 57
14.04 Acceptance of Defective Work 58
14.05 Uncovering Work 58
14.06 Owner May Stop the Work 58
14.07 Owner May Correct Defective Work 59
Article 15—Payments to Contractor; Set-Offs; Completion; Correction Period 59
15.01 Progress Payments 59
15.02 Contractor's Warranty of Title 62
15.03 Substantial Completion 62
15.04 Partial Use or Occupancy 63
15.05 Final Inspection 64
15.06 Final Payment 64
15.07 Waiver of Claims 65
15.08 Correction Period 66
Article 16—Suspension of Work and Termination 67
16.01 Owner May Suspend Work 67
16.02 Owner May Terminate for Cause 67
16.03 Owner May Terminate for Convenience 68
16.04 Contractor May Stop Work or Terminate 68
Article 17—Final Resolution of Disputes 69
17.01 Methods and Procedures 69
Article 18—Miscellaneous 69
18.01 Giving Notice 69
18.02 Computation of Times 69

Copyright© 2018 National Society of Professional Engineers, American Council of Engineering Companies, and American Society of Civil Engineers. All rights reserved.

18.03 Cumulative Remedies 70
18.04 Limitation of Damages 70
18.05 No Waiver 70
18.06 Survival of Obligations 70
18.07 Controlling Law 70
18.08 Assignment of Contract 70
18.09 Successors and Assigns 70
18.10 Headings 70

Copyright© 2018 National Society of Professional Engineers, American Council of Engineering Companies, and American Society of Civil Engineers. All rights reserved.

STANDARD GENERAL CONDITIONS OF THE CONSTRUCTION CONTRACT

ARTICLE 1—DEFINITIONS AND TERMINOLOGY

1.01 *Defined Terms*

A. Wherever used in the Bidding Requirements or Contract Documents, a term printed with initial capital letters, including the term's singular and plural forms, will have the meaning indicated in the definitions below. In addition to terms specifically defined, terms with initial capital letters in the Contract Documents include references to identified articles and paragraphs, and the titles of other documents or forms.

1. *Addenda*—Written or graphic instruments issued prior to the opening of Bids which clarify, correct, or change the Bidding Requirements or the proposed Contract Documents.

2. *Agreement*—The written instrument, executed by Owner and Contractor, that sets forth the Contract Price and Contract Times, identifies the parties and the Engineer, and designates the specific items that are Contract Documents.

3. *Application for Payment*—The document prepared by Contractor, in a form acceptable to Engineer, to request progress or final payments, and which is to be accompanied by such supporting documentation as is required by the Contract Documents.

4. *Bid*—The offer of a Bidder submitted on the prescribed form setting forth the prices for the Work to be performed.

5. *Bidder*—An individual or entity that submits a Bid to Owner.

6. *Bidding Documents*—The Bidding Requirements, the proposed Contract Documents, and all Addenda.

7. *Bidding Requirements*—The Advertisement or invitation to bid, Instructions to Bidders, Bid Bond or other Bid security, if any, the Bid Form, and the Bid with any attachments.

8. *Change Order*—A document which is signed by Contractor and Owner and authorizes an addition, deletion, or revision in the Work or an adjustment in the Contract Price or the Contract Times, or other revision to the Contract, issued on or after the Effective Date of the Contract.

9. *Change Proposal*—A written request by Contractor, duly submitted in compliance with the procedural requirements set forth herein, seeking an adjustment in Contract Price or Contract Times; contesting an initial decision by Engineer concerning the requirements of the Contract Documents or the acceptability of Work under the Contract Documents; challenging a set-off against payments due; or seeking other relief with respect to the terms of the Contract.

10. *Claim*

a. A demand or assertion by Owner directly to Contractor, duly submitted in compliance with the procedural requirements set forth herein, seeking an adjustment of Contract Price or Contract Times; contesting an initial decision by Engineer concerning the

Copyright© 2018 National Society of Professional Engineers, American Council of Engineering Companies, and American Society of Civil Engineers. All rights reserved.

requirements of the Contract Documents or the acceptability of Work under the Contract Documents; contesting Engineer's decision regarding a Change Proposal; seeking resolution of a contractual issue that Engineer has declined to address; or seeking other relief with respect to the terms of the Contract.

b. A demand or assertion by Contractor directly to Owner, duly submitted in compliance with the procedural requirements set forth herein, contesting Engineer's decision regarding a Change Proposal, or seeking resolution of a contractual issue that Engineer has declined to address.

c. A demand or assertion by Owner or Contractor, duly submitted in compliance with the procedural requirements set forth herein, made pursuant to Paragraph 12.01.A.4, concerning disputes arising after Engineer has issued a recommendation of final payment.

d. A demand for money or services by a third party is not a Claim.

11. *Constituent of Concern*—Asbestos, petroleum, radioactive materials, polychlorinated biphenyls (PCBs), lead-based paint (as defined by the HUD/EPA standard), hazardous waste, and any substance, product, waste, or other material of any nature whatsoever that is or becomes listed, regulated, or addressed pursuant to Laws and Regulations regulating, relating to, or imposing liability or standards of conduct concerning, any hazardous, toxic, or dangerous waste, substance, or material.

12. *Contract*—The entire and integrated written contract between Owner and Contractor concerning the Work.

13. *Contract Documents*—Those items so designated in the Agreement, and which together comprise the Contract.

14. *Contract Price*—The money that Owner has agreed to pay Contractor for completion of the Work in accordance with the Contract Documents.

15. *Contract Times*—The number of days or the dates by which Contractor shall: (a) achieve Milestones, if any; (b) achieve Substantial Completion; and (c) complete the Work.

16. *Contractor*—The individual or entity with which Owner has contracted for performance of the Work.

17. *Cost of the Work*—See Paragraph 13.01 for definition.

18. *Drawings*—The part of the Contract that graphically shows the scope, extent, and character of the Work to be performed by Contractor.

19. *Effective Date of the Contract*—The date, indicated in the Agreement, on which the Contract becomes effective.

20. *Electronic Document*—Any Project-related correspondence, attachments to correspondence, data, documents, drawings, information, or graphics, including but not limited to Shop Drawings and other Submittals, that are in an electronic or digital format.

21. *Electronic Means*—Electronic mail (email), upload/download from a secure Project website, or other communications methods that allow: (a) the transmission or communication of Electronic Documents; (b) the documentation of transmissions, including sending and receipt; (c) printing of the transmitted Electronic Document by the

Copyright© 2018 National Society of Professional Engineers, American Council of Engineering Companies, and American Society of Civil Engineers. All rights reserved.

recipient; (d) the storage and archiving of the Electronic Document by sender and recipient; and (e) the use by recipient of the Electronic Document for purposes permitted by this Contract. Electronic Means does not include the use of text messaging, or of Facebook, Twitter, Instagram, or similar social media services for transmission of Electronic Documents.

22. *Engineer*—The individual or entity named as such in the Agreement.

23. *Field Order*—A written order issued by Engineer which requires minor changes in the Work but does not change the Contract Price or the Contract Times.

24. *Hazardous Environmental Condition*—The presence at the Site of Constituents of Concern in such quantities or circumstances that may present a danger to persons or property exposed thereto.

    a. The presence at the Site of materials that are necessary for the execution of the Work, or that are to be incorporated into the Work, and that are controlled and contained pursuant to industry practices, Laws and Regulations, and the requirements of the Contract, is not a Hazardous Environmental Condition.

    b. The presence of Constituents of Concern that are to be removed or remediated as part of the Work is not a Hazardous Environmental Condition.

    c. The presence of Constituents of Concern as part of the routine, anticipated, and obvious working conditions at the Site, is not a Hazardous Environmental Condition.

25. *Laws and Regulations; Laws or Regulations*—Any and all applicable laws, statutes, rules, regulations, ordinances, codes, and binding decrees, resolutions, and orders of any and all governmental bodies, agencies, authorities, and courts having jurisdiction.

26. *Liens*—Charges, security interests, or encumbrances upon Contract-related funds, real property, or personal property.

27. *Milestone*—A principal event in the performance of the Work that the Contract requires Contractor to achieve by an intermediate completion date, or by a time prior to Substantial Completion of all the Work.

28. *Notice of Award*—The written notice by Owner to a Bidder of Owner's acceptance of the Bid.

29. *Notice to Proceed*—A written notice by Owner to Contractor fixing the date on which the Contract Times will commence to run and on which Contractor shall start to perform the Work.

30. *Owner*—The individual or entity with which Contractor has contracted regarding the Work, and which has agreed to pay Contractor for the performance of the Work, pursuant to the terms of the Contract.

31. *Progress Schedule*—A schedule, prepared and maintained by Contractor, describing the sequence and duration of the activities comprising Contractor's plan to accomplish the Work within the Contract Times.

32. *Project*—The total undertaking to be accomplished for Owner by engineers, contractors, and others, including planning, study, design, construction, testing, commissioning, and start-up, and of which the Work to be performed under the Contract Documents is a part.

Copyright© 2018 National Society of Professional Engineers, American Council of Engineering Companies, and American Society of Civil Engineers. All rights reserved.

33. *Resident Project Representative*—The authorized representative of Engineer assigned to assist Engineer at the Site. As used herein, the term Resident Project Representative (RPR) includes any assistants or field staff of Resident Project Representative.

34. *Samples*—Physical examples of materials, equipment, or workmanship that are representative of some portion of the Work and that establish the standards by which such portion of the Work will be judged.

35. *Schedule of Submittals*—A schedule, prepared and maintained by Contractor, of required submittals and the time requirements for Engineer's review of the submittals.

36. *Schedule of Values*—A schedule, prepared and maintained by Contractor, allocating portions of the Contract Price to various portions of the Work and used as the basis for reviewing Contractor's Applications for Payment.

37. *Shop Drawings*—All drawings, diagrams, illustrations, schedules, and other data or information that are specifically prepared or assembled by or for Contractor and submitted by Contractor to illustrate some portion of the Work. Shop Drawings, whether approved or not, are not Drawings and are not Contract Documents.

38. *Site*—Lands or areas indicated in the Contract Documents as being furnished by Owner upon which the Work is to be performed, including rights-of-way and easements, and such other lands or areas furnished by Owner which are designated for the use of Contractor.

39. *Specifications*—The part of the Contract that consists of written requirements for materials, equipment, systems, standards, and workmanship as applied to the Work, and certain administrative requirements and procedural matters applicable to the Work.

40. *Subcontractor*—An individual or entity having a direct contract with Contractor or with any other Subcontractor for the performance of a part of the Work.

41. *Submittal*—A written or graphic document, prepared by or for Contractor, which the Contract Documents require Contractor to submit to Engineer, or that is indicated as a Submittal in the Schedule of Submittals accepted by Engineer. Submittals may include Shop Drawings and Samples; schedules; product data; Owner-delegated designs; sustainable design information; information on special procedures; testing plans; results of tests and evaluations, source quality-control testing and inspections, and field or Site quality-control testing and inspections; warranties and certifications; Suppliers' instructions and reports; records of delivery of spare parts and tools; operations and maintenance data; Project photographic documentation; record documents; and other such documents required by the Contract Documents. Submittals, whether or not approved or accepted by Engineer, are not Contract Documents. Change Proposals, Change Orders, Claims, notices, Applications for Payment, and requests for interpretation or clarification are not Submittals.

42. *Substantial Completion*—The time at which the Work (or a specified part thereof) has progressed to the point where, in the opinion of Engineer, the Work (or a specified part thereof) is sufficiently complete, in accordance with the Contract Documents, so that the Work (or a specified part thereof) can be utilized for the purposes for which it is intended. The terms "substantially complete" and "substantially completed" as applied to all or part of the Work refer to Substantial Completion of such Work.

Copyright© 2018 National Society of Professional Engineers, American Council of Engineering Companies, and American Society of Civil Engineers. All rights reserved.

43. *Successful Bidder*—The Bidder to which the Owner makes an award of contract.

44. *Supplementary Conditions*—The part of the Contract that amends or supplements these General Conditions.

45. *Supplier*—A manufacturer, fabricator, supplier, distributor, or vendor having a direct contract with Contractor or with any Subcontractor to furnish materials or equipment to be incorporated in the Work by Contractor or a Subcontractor.

46. *Technical Data*

    a. Those items expressly identified as Technical Data in the Supplementary Conditions, with respect to either (1) existing subsurface conditions at or adjacent to the Site, or existing physical conditions at or adjacent to the Site including existing surface or subsurface structures (except Underground Facilities) or (2) Hazardous Environmental Conditions at the Site.

    b. If no such express identifications of Technical Data have been made with respect to conditions at the Site, then Technical Data is defined, with respect to conditions at the Site under Paragraphs 5.03, 5.04, and 5.06, as the data contained in boring logs, recorded measurements of subsurface water levels, assessments of the condition of subsurface facilities, laboratory test results, and other factual, objective information regarding conditions at the Site that are set forth in any geotechnical, environmental, or other Site or facilities conditions report prepared for the Project and made available to Contractor.

    c. Information and data regarding the presence or location of Underground Facilities are not intended to be categorized, identified, or defined as Technical Data, and instead Underground Facilities are shown or indicated on the Drawings.

47. *Underground Facilities*—All active or not-in-service underground lines, pipelines, conduits, ducts, encasements, cables, wires, manholes, vaults, tanks, tunnels, or other such facilities or systems at the Site, including but not limited to those facilities or systems that produce, transmit, distribute, or convey telephone or other communications, cable television, fiber optic transmissions, power, electricity, light, heat, gases, oil, crude oil products, liquid petroleum products, water, steam, waste, wastewater, storm water, other liquids or chemicals, or traffic or other control systems. An abandoned facility or system is not an Underground Facility.

48. *Unit Price Work*—Work to be paid for on the basis of unit prices.

49. *Work*—The entire construction or the various separately identifiable parts thereof required to be provided under the Contract Documents. Work includes and is the result of performing or providing all labor, services, and documentation necessary to produce such construction; furnishing, installing, and incorporating all materials and equipment into such construction; and may include related services such as testing, start-up, and commissioning, all as required by the Contract Documents.

50. *Work Change Directive*—A written directive to Contractor issued on or after the Effective Date of the Contract, signed by Owner and recommended by Engineer, ordering an addition, deletion, or revision in the Work.

Copyright© 2018 National Society of Professional Engineers, American Council of Engineering Companies, and American Society of Civil Engineers. All rights reserved.

1.02 *Terminology*

A. The words and terms discussed in Paragraphs 1.02.B, C, D, and E are not defined terms that require initial capital letters, but, when used in the Bidding Requirements or Contract Documents, have the indicated meaning.

B. *Intent of Certain Terms or Adjectives*: The Contract Documents include the terms "as allowed," "as approved," "as ordered," "as directed" or terms of like effect or import to authorize an exercise of professional judgment by Engineer. In addition, the adjectives "reasonable," "suitable," "acceptable," "proper," "satisfactory," or adjectives of like effect or import are used to describe an action or determination of Engineer as to the Work. It is intended that such exercise of professional judgment, action, or determination will be solely to evaluate, in general, the Work for compliance with the information in the Contract Documents and with the design concept of the Project as a functioning whole as shown or indicated in the Contract Documents (unless there is a specific statement indicating otherwise). The use of any such term or adjective is not intended to and shall not be effective to assign to Engineer any duty or authority to supervise or direct the performance of the Work, or any duty or authority to undertake responsibility contrary to the provisions of Article 10 or any other provision of the Contract Documents.

C. *Day*: The word "day" means a calendar day of 24 hours measured from midnight to the next midnight.

D. *Defective*: The word "defective," when modifying the word "Work," refers to Work that is unsatisfactory, faulty, or deficient in that it:

1. does not conform to the Contract Documents;

2. does not meet the requirements of any applicable inspection, reference standard, test, or approval referred to in the Contract Documents; or

3. has been damaged prior to Engineer's recommendation of final payment (unless responsibility for the protection thereof has been assumed by Owner at Substantial Completion in accordance with Paragraph 15.03 or Paragraph 15.04).

E. *Furnish, Install, Perform, Provide*

1. The word "furnish," when used in connection with services, materials, or equipment, means to supply and deliver said services, materials, or equipment to the Site (or some other specified location) ready for use or installation and in usable or operable condition.

2. The word "install," when used in connection with services, materials, or equipment, means to put into use or place in final position said services, materials, or equipment complete and ready for intended use.

3. The words "perform" or "provide," when used in connection with services, materials, or equipment, means to furnish and install said services, materials, or equipment complete and ready for intended use.

4. If the Contract Documents establish an obligation of Contractor with respect to specific services, materials, or equipment, but do not expressly use any of the four words "furnish," "install," "perform," or "provide," then Contractor shall furnish and install said services, materials, or equipment complete and ready for intended use.

Copyright© 2018 National Society of Professional Engineers, American Council of Engineering Companies, and American Society of Civil Engineers. All rights reserved.

F. *Contract Price or Contract Times*: References to a change in "Contract Price or Contract Times" or "Contract Times or Contract Price" or similar, indicate that such change applies to (1) Contract Price, (2) Contract Times, or (3) both Contract Price and Contract Times, as warranted, even if the term "or both" is not expressed.

G. Unless stated otherwise in the Contract Documents, words or phrases that have a well-known technical or construction industry or trade meaning are used in the Contract Documents in accordance with such recognized meaning.

ARTICLE 2—PRELIMINARY MATTERS

2.01 *Delivery of Performance and Payment Bonds; Evidence of Insurance*

A. *Performance and Payment Bonds*: When Contractor delivers the signed counterparts of the Agreement to Owner, Contractor shall also deliver to Owner the performance bond and payment bond (if the Contract requires Contractor to furnish such bonds).

B. *Evidence of Contractor's Insurance*: When Contractor delivers the signed counterparts of the Agreement to Owner, Contractor shall also deliver to Owner, with copies to each additional insured (as identified in the Contract), the certificates, endorsements, and other evidence of insurance required to be provided by Contractor in accordance with Article 6, except to the extent the Supplementary Conditions expressly establish other dates for delivery of specific insurance policies.

C. *Evidence of Owner's Insurance*: After receipt of the signed counterparts of the Agreement and all required bonds and insurance documentation, Owner shall promptly deliver to Contractor, with copies to each additional insured (as identified in the Contract), the certificates and other evidence of insurance required to be provided by Owner under Article 6.

2.02 *Copies of Documents*

A. Owner shall furnish to Contractor four printed copies of the Contract (including one fully signed counterpart of the Agreement), and one copy in electronic portable document format (PDF). Additional printed copies will be furnished upon request at the cost of reproduction.

B. Owner shall maintain and safeguard at least one original printed record version of the Contract, including Drawings and Specifications signed and sealed by Engineer and other design professionals. Owner shall make such original printed record version of the Contract available to Contractor for review. Owner may delegate the responsibilities under this provision to Engineer.

2.03 *Before Starting Construction*

A. *Preliminary Schedules*: Within 10 days after the Effective Date of the Contract (or as otherwise required by the Contract Documents), Contractor shall submit to Engineer for timely review:

1. a preliminary Progress Schedule indicating the times (numbers of days or dates) for starting and completing the various stages of the Work, including any Milestones specified in the Contract;

2. a preliminary Schedule of Submittals; and

3. a preliminary Schedule of Values for all of the Work which includes quantities and prices of items which when added together equal the Contract Price and subdivides the Work

Copyright© 2018 National Society of Professional Engineers, American Council of Engineering Companies, and American Society of Civil Engineers. All rights reserved.

into component parts in sufficient detail to serve as the basis for progress payments during performance of the Work. Such prices will include an appropriate amount of overhead and profit applicable to each item of Work.

2.04 *Preconstruction Conference; Designation of Authorized Representatives*

A. Before any Work at the Site is started, a conference attended by Owner, Contractor, Engineer, and others as appropriate will be held to establish a working understanding among the parties as to the Work, and to discuss the schedules referred to in Paragraph 2.03.A, procedures for handling Shop Drawings, Samples, and other Submittals, processing Applications for Payment, electronic or digital transmittals, and maintaining required records.

B. At this conference Owner and Contractor each shall designate, in writing, a specific individual to act as its authorized representative with respect to the services and responsibilities under the Contract. Such individuals shall have the authority to transmit and receive information, render decisions relative to the Contract, and otherwise act on behalf of each respective party.

2.05 *Acceptance of Schedules*

A. At least 10 days before submission of the first Application for Payment a conference, attended by Contractor, Engineer, and others as appropriate, will be held to review the schedules submitted in accordance with Paragraph 2.03.A. No progress payment will be made to Contractor until acceptable schedules are submitted to Engineer.

1. The Progress Schedule will be acceptable to Engineer if it provides an orderly progression of the Work to completion within the Contract Times. Such acceptance will not impose on Engineer responsibility for the Progress Schedule, for sequencing, scheduling, or progress of the Work, nor interfere with or relieve Contractor from Contractor's full responsibility therefor.

2. Contractor's Schedule of Submittals will be acceptable to Engineer if it provides a workable arrangement for reviewing and processing the required submittals.

3. Contractor's Schedule of Values will be acceptable to Engineer as to form and substance if it provides a reasonable allocation of the Contract Price to the component parts of the Work.

4. If a schedule is not acceptable, Contractor will have an additional 10 days to revise and resubmit the schedule.

2.06 *Electronic Transmittals*

A. Except as otherwise stated elsewhere in the Contract, the Owner, Engineer, and Contractor may send, and shall accept, Electronic Documents transmitted by Electronic Means.

B. If the Contract does not establish protocols for Electronic Means, then Owner, Engineer, and Contractor shall jointly develop such protocols.

C. Subject to any governing protocols for Electronic Means, when transmitting Electronic Documents by Electronic Means, the transmitting party makes no representations as to long-term compatibility, usability, or readability of the Electronic Documents resulting from the recipient's use of software application packages, operating systems, or computer hardware differing from those used in the drafting or transmittal of the Electronic Documents.

Copyright© 2018 National Society of Professional Engineers, American Council of Engineering Companies, and American Society of Civil Engineers. All rights reserved.

ARTICLE 3—CONTRACT DOCUMENTS: INTENT, REQUIREMENTS, REUSE

3.01 *Intent*

A. The Contract Documents are complementary; what is required by one Contract Document is as binding as if required by all.

B. It is the intent of the Contract Documents to describe a functionally complete Project (or part thereof) to be constructed in accordance with the Contract Documents.

C. Unless otherwise stated in the Contract Documents, if there is a discrepancy between the electronic versions of the Contract Documents (including any printed copies derived from such electronic versions) and the printed record version, the printed record version will govern.

D. The Contract supersedes prior negotiations, representations, and agreements, whether written or oral.

E. Engineer will issue clarifications and interpretations of the Contract Documents as provided herein.

F. Any provision or part of the Contract Documents held to be void or unenforceable under any Law or Regulation will be deemed stricken, and all remaining provisions will continue to be valid and binding upon Owner and Contractor, which agree that the Contract Documents will be reformed to replace such stricken provision or part thereof with a valid and enforceable provision that comes as close as possible to expressing the intention of the stricken provision.

G. Nothing in the Contract Documents creates:

1. any contractual relationship between Owner or Engineer and any Subcontractor, Supplier, or other individual or entity performing or furnishing any of the Work, for the benefit of such Subcontractor, Supplier, or other individual or entity; or

2. any obligation on the part of Owner or Engineer to pay or to see to the payment of any money due any such Subcontractor, Supplier, or other individual or entity, except as may otherwise be required by Laws and Regulations.

3.02 *Reference Standards*

A. *Standards Specifications, Codes, Laws and Regulations*

1. Reference in the Contract Documents to standard specifications, manuals, reference standards, or codes of any technical society, organization, or association, or to Laws or Regulations, whether such reference be specific or by implication, means the standard specification, manual, reference standard, code, or Laws or Regulations in effect at the time of opening of Bids (or on the Effective Date of the Contract if there were no Bids), except as may be otherwise specifically stated in the Contract Documents.

2. No provision of any such standard specification, manual, reference standard, or code, and no instruction of a Supplier, will be effective to change the duties or responsibilities of Owner, Contractor, or Engineer from those set forth in the part of the Contract Documents prepared by or for Engineer. No such provision or instruction shall be effective to assign to Owner or Engineer any duty or authority to supervise or direct the performance of the Work, or any duty or authority to undertake responsibility

Copyright© 2018 National Society of Professional Engineers, American Council of Engineering Companies, and American Society of Civil Engineers. All rights reserved.

inconsistent with the provisions of the part of the Contract Documents prepared by or for Engineer.

3.03 *Reporting and Resolving Discrepancies*

A. *Reporting Discrepancies*

1. *Contractor's Verification of Figures and Field Measurements*: Before undertaking each part of the Work, Contractor shall carefully study the Contract Documents, and check and verify pertinent figures and dimensions therein, particularly with respect to applicable field measurements. Contractor shall promptly report in writing to Engineer any conflict, error, ambiguity, or discrepancy that Contractor discovers, or has actual knowledge of, and shall not proceed with any Work affected thereby until the conflict, error, ambiguity, or discrepancy is resolved by a clarification or interpretation by Engineer, or by an amendment or supplement to the Contract issued pursuant to Paragraph 11.01.

2. *Contractor's Review of Contract Documents*: If, before or during the performance of the Work, Contractor discovers any conflict, error, ambiguity, or discrepancy within the Contract Documents, or between the Contract Documents and (a) any applicable Law or Regulation, (b) actual field conditions, (c) any standard specification, manual, reference standard, or code, or (d) any instruction of any Supplier, then Contractor shall promptly report it to Engineer in writing. Contractor shall not proceed with the Work affected thereby (except in an emergency as required by Paragraph 7.15) until the conflict, error, ambiguity, or discrepancy is resolved, by a clarification or interpretation by Engineer, or by an amendment or supplement to the Contract issued pursuant to Paragraph 11.01.

3. Contractor shall not be liable to Owner or Engineer for failure to report any conflict, error, ambiguity, or discrepancy in the Contract Documents unless Contractor had actual knowledge thereof.

B. *Resolving Discrepancies*

1. Except as may be otherwise specifically stated in the Contract Documents, the provisions of the part of the Contract Documents prepared by or for Engineer take precedence in resolving any conflict, error, ambiguity, or discrepancy between such provisions of the Contract Documents and:

a. the provisions of any standard specification, manual, reference standard, or code, or the instruction of any Supplier (whether or not specifically incorporated by reference as a Contract Document); or

b. the provisions of any Laws or Regulations applicable to the performance of the Work (unless such an interpretation of the provisions of the Contract Documents would result in violation of such Law or Regulation).

3.04 *Requirements of the Contract Documents*

A. During the performance of the Work and until final payment, Contractor and Owner shall submit to the Engineer in writing all matters in question concerning the requirements of the Contract Documents (sometimes referred to as requests for information or interpretation—RFIs), or relating to the acceptability of the Work under the Contract Documents, as soon as possible after such matters arise. Engineer will be the initial interpreter of the requirements of the Contract Documents, and judge of the acceptability of the Work.

Copyright© 2018 National Society of Professional Engineers, American Council of Engineering Companies, and American Society of Civil Engineers. All rights reserved.

B. Engineer will, with reasonable promptness, render a written clarification, interpretation, or decision on the issue submitted, or initiate an amendment or supplement to the Contract Documents. Engineer's written clarification, interpretation, or decision will be final and binding on Contractor, unless it appeals by submitting a Change Proposal, and on Owner, unless it appeals by filing a Claim.

C. If a submitted matter in question concerns terms and conditions of the Contract Documents that do not involve (1) the performance or acceptability of the Work under the Contract Documents, (2) the design (as set forth in the Drawings, Specifications, or otherwise), or (3) other engineering or technical matters, then Engineer will promptly notify Owner and Contractor in writing that Engineer is unable to provide a decision or interpretation. If Owner and Contractor are unable to agree on resolution of such a matter in question, either party may pursue resolution as provided in Article 12.

3.05 *Reuse of Documents*

A. Contractor and its Subcontractors and Suppliers shall not:

1. have or acquire any title to or ownership rights in any of the Drawings, Specifications, or other documents (or copies of any thereof) prepared by or bearing the seal of Engineer or its consultants, including electronic media versions, or reuse any such Drawings, Specifications, other documents, or copies thereof on extensions of the Project or any other project without written consent of Owner and Engineer and specific written verification or adaptation by Engineer; or

2. have or acquire any title or ownership rights in any other Contract Documents, reuse any such Contract Documents for any purpose without Owner's express written consent, or violate any copyrights pertaining to such Contract Documents.

B. The prohibitions of this Paragraph 3.05 will survive final payment, or termination of the Contract. Nothing herein precludes Contractor from retaining copies of the Contract Documents for record purposes.

ARTICLE 4—COMMENCEMENT AND PROGRESS OF THE WORK

4.01 *Commencement of Contract Times; Notice to Proceed*

A. The Contract Times will commence to run on the 30th day after the Effective Date of the Contract or, if a Notice to Proceed is given, on the day indicated in the Notice to Proceed. A Notice to Proceed may be given at any time within 30 days after the Effective Date of the Contract. In no event will the Contract Times commence to run later than the 60th day after the day of Bid opening or the 30th day after the Effective Date of the Contract, whichever date is earlier.

4.02 *Starting the Work*

A. Contractor shall start to perform the Work on the date when the Contract Times commence to run. No Work may be done at the Site prior to such date.

4.03 *Reference Points*

A. Owner shall provide engineering surveys to establish reference points for construction which in Engineer's judgment are necessary to enable Contractor to proceed with the Work. Contractor shall be responsible for laying out the Work, shall protect and preserve the

Copyright© 2018 National Society of Professional Engineers, American Council of Engineering Companies, and American Society of Civil Engineers. All rights reserved.

established reference points and property monuments, and shall make no changes or relocations without the prior written approval of Owner. Contractor shall report to Engineer whenever any reference point or property monument is lost or destroyed or requires relocation because of necessary changes in grades or locations, and shall be responsible for the accurate replacement or relocation of such reference points or property monuments by professionally qualified personnel.

4.04 *Progress Schedule*

A. Contractor shall adhere to the Progress Schedule established in accordance with Paragraph 2.05 as it may be adjusted from time to time as provided below.

1. Contractor shall submit to Engineer for acceptance (to the extent indicated in Paragraph 2.05) proposed adjustments in the Progress Schedule that will not result in changing the Contract Times.

2. Proposed adjustments in the Progress Schedule that will change the Contract Times must be submitted in accordance with the requirements of Article 11.

B. Contractor shall carry on the Work and adhere to the Progress Schedule during all disputes or disagreements with Owner. No Work will be delayed or postponed pending resolution of any disputes or disagreements, or during any appeal process, except as permitted by Paragraph 16.04, or as Owner and Contractor may otherwise agree in writing.

4.05 *Delays in Contractor's Progress*

A. If Owner, Engineer, or anyone for whom Owner is responsible, delays, disrupts, or interferes with the performance or progress of the Work, then Contractor shall be entitled to an equitable adjustment in Contract Price or Contract Times.

B. Contractor shall not be entitled to an adjustment in Contract Price or Contract Times for delay, disruption, or interference caused by or within the control of Contractor. Delay, disruption, and interference attributable to and within the control of a Subcontractor or Supplier shall be deemed to be within the control of Contractor.

C. If Contractor's performance or progress is delayed, disrupted, or interfered with by unanticipated causes not the fault of and beyond the control of Owner, Contractor, and those for which they are responsible, then Contractor shall be entitled to an equitable adjustment in Contract Times. Such an adjustment will be Contractor's sole and exclusive remedy for the delays, disruption, and interference described in this paragraph. Causes of delay, disruption, or interference that may give rise to an adjustment in Contract Times under this paragraph include but are not limited to the following:

1. Severe and unavoidable natural catastrophes such as fires, floods, epidemics, and earthquakes;

2. Abnormal weather conditions;

3. Acts or failures to act of third-party utility owners or other third-party entities (other than those third-party utility owners or other third-party entities performing other work at or adjacent to the Site as arranged by or under contract with Owner, as contemplated in Article 8); and

4. Acts of war or terrorism.

Copyright© 2018 National Society of Professional Engineers, American Council of Engineering Companies, and American Society of Civil Engineers. All rights reserved.

D. Contractor's entitlement to an adjustment of Contract Times or Contract Price is limited as follows:

1. Contractor's entitlement to an adjustment of the Contract Times is conditioned on the delay, disruption, or interference adversely affecting an activity on the critical path to completion of the Work, as of the time of the delay, disruption, or interference.

2. Contractor shall not be entitled to an adjustment in Contract Price for any delay, disruption, or interference if such delay is concurrent with a delay, disruption, or interference caused by or within the control of Contractor. Such a concurrent delay by Contractor shall not preclude an adjustment of Contract Times to which Contractor is otherwise entitled.

3. Adjustments of Contract Times or Contract Price are subject to the provisions of Article 11.

E. Each Contractor request or Change Proposal seeking an increase in Contract Times or Contract Price must be supplemented by supporting data that sets forth in detail the following:

1. The circumstances that form the basis for the requested adjustment;

2. The date upon which each cause of delay, disruption, or interference began to affect the progress of the Work;

3. The date upon which each cause of delay, disruption, or interference ceased to affect the progress of the Work;

4. The number of days' increase in Contract Times claimed as a consequence of each such cause of delay, disruption, or interference; and

5. The impact on Contract Price, in accordance with the provisions of Paragraph 11.07.

Contractor shall also furnish such additional supporting documentation as Owner or Engineer may require including, where appropriate, a revised progress schedule indicating all the activities affected by the delay, disruption, or interference, and an explanation of the effect of the delay, disruption, or interference on the critical path to completion of the Work.

F. Delays, disruption, and interference to the performance or progress of the Work resulting from the existence of a differing subsurface or physical condition, an Underground Facility that was not shown or indicated by the Contract Documents, or not shown or indicated with reasonable accuracy, and those resulting from Hazardous Environmental Conditions, are governed by Article 5, together with the provisions of Paragraphs 4.05.D and 4.05.E.

G. Paragraph 8.03 addresses delays, disruption, and interference to the performance or progress of the Work resulting from the performance of certain other work at or adjacent to the Site.

ARTICLE 5—SITE; SUBSURFACE AND PHYSICAL CONDITIONS; HAZARDOUS ENVIRONMENTAL CONDITIONS

5.01 *Availability of Lands*

A. Owner shall furnish the Site. Owner shall notify Contractor in writing of any encumbrances or restrictions not of general application but specifically related to use of the Site with which Contractor must comply in performing the Work.

Copyright© 2018 National Society of Professional Engineers, American Council of Engineering Companies, and American Society of Civil Engineers. All rights reserved.

B. Upon reasonable written request, Owner shall furnish Contractor with a current statement of record legal title and legal description of the lands upon which permanent improvements are to be made and Owner's interest therein as necessary for giving notice of or filing a mechanic's or construction lien against such lands in accordance with applicable Laws and Regulations.

C. Contractor shall provide for all additional lands and access thereto that may be required for temporary construction facilities or storage of materials and equipment.

5.02 *Use of Site and Other Areas*

A. *Limitation on Use of Site and Other Areas*

1. Contractor shall confine construction equipment, temporary construction facilities, the storage of materials and equipment, and the operations of workers to the Site, adjacent areas that Contractor has arranged to use through construction easements or otherwise, and other adjacent areas permitted by Laws and Regulations, and shall not unreasonably encumber the Site and such other adjacent areas with construction equipment or other materials or equipment. Contractor shall assume full responsibility for (a) damage to the Site; (b) damage to any such other adjacent areas used for Contractor's operations; (c) damage to any other adjacent land or areas, or to improvements, structures, utilities, or similar facilities located at such adjacent lands or areas; and (d) for injuries and losses sustained by the owners or occupants of any such land or areas; provided that such damage or injuries result from the performance of the Work or from other actions or conduct of the Contractor or those for which Contractor is responsible.

2. If a damage or injury claim is made by the owner or occupant of any such land or area because of the performance of the Work, or because of other actions or conduct of the Contractor or those for which Contractor is responsible, Contractor shall (a) take immediate corrective or remedial action as required by Paragraph 7.13, or otherwise; (b) promptly attempt to settle the claim as to all parties through negotiations with such owner or occupant, or otherwise resolve the claim by arbitration or other dispute resolution proceeding, or in a court of competent jurisdiction; and (c) to the fullest extent permitted by Laws and Regulations, indemnify and hold harmless Owner and Engineer, and the officers, directors, members, partners, employees, agents, consultants and subcontractors of each and any of them, from and against any such claim, and against all costs, losses, and damages (including but not limited to all fees and charges of engineers, architects, attorneys, and other professionals and all court or arbitration or other dispute resolution costs) arising out of or relating to any claim or action, legal or equitable, brought by any such owner or occupant against Owner, Engineer, or any other party indemnified hereunder to the extent caused directly or indirectly, in whole or in part by, or based upon, Contractor's performance of the Work, or because of other actions or conduct of the Contractor or those for which Contractor is responsible.

B. *Removal of Debris During Performance of the Work*: During the progress of the Work the Contractor shall keep the Site and other adjacent areas free from accumulations of waste materials, rubbish, and other debris. Removal and disposal of such waste materials, rubbish, and other debris will conform to applicable Laws and Regulations.

C. *Cleaning*: Prior to Substantial Completion of the Work Contractor shall clean the Site and the Work and make it ready for utilization by Owner. At the completion of the Work Contractor shall remove from the Site and adjacent areas all tools, appliances, construction equipment

Copyright© 2018 National Society of Professional Engineers, American Council of Engineering Companies, and American Society of Civil Engineers. All rights reserved.

and machinery, and surplus materials and shall restore to original condition all property not designated for alteration by the Contract Documents.

D. *Loading of Structures*: Contractor shall not load nor permit any part of any structure to be loaded in any manner that will endanger the structure, nor shall Contractor subject any part of the Work or adjacent structures or land to stresses or pressures that will endanger them.

5.03 *Subsurface and Physical Conditions*

A. *Reports and Drawings*: The Supplementary Conditions identify:

1. Those reports of explorations and tests of subsurface conditions at or adjacent to the Site that contain Technical Data;

2. Those drawings of existing physical conditions at or adjacent to the Site, including those drawings depicting existing surface or subsurface structures at or adjacent to the Site (except Underground Facilities), that contain Technical Data; and

3. Technical Data contained in such reports and drawings.

B. *Underground Facilities*: Underground Facilities are shown or indicated on the Drawings, pursuant to Paragraph 5.05, and not in the drawings referred to in Paragraph 5.03.A. Information and data regarding the presence or location of Underground Facilities are not intended to be categorized, identified, or defined as Technical Data.

C. *Reliance by Contractor on Technical Data*: Contractor may rely upon the accuracy of the Technical Data expressly identified in the Supplementary Conditions with respect to such reports and drawings, but such reports and drawings are not Contract Documents. If no such express identification has been made, then Contractor may rely upon the accuracy of the Technical Data as defined in Paragraph 1.01.A.46.b.

D. *Limitations of Other Data and Documents*: Except for such reliance on Technical Data, Contractor may not rely upon or make any claim against Owner or Engineer, or any of their officers, directors, members, partners, employees, agents, consultants, or subcontractors, with respect to:

1. the completeness of such reports and drawings for Contractor's purposes, including, but not limited to, any aspects of the means, methods, techniques, sequences, and procedures of construction to be employed by Contractor, and safety precautions and programs incident thereto;

2. other data, interpretations, opinions, and information contained in such reports or shown or indicated in such drawings;

3. the contents of other Site-related documents made available to Contractor, such as record drawings from other projects at or adjacent to the Site, or Owner's archival documents concerning the Site; or

4. any Contractor interpretation of or conclusion drawn from any Technical Data or any such other data, interpretations, opinions, or information.

Copyright© 2018 National Society of Professional Engineers, American Council of Engineering Companies, and American Society of Civil Engineers. All rights reserved.

5.04 *Differing Subsurface or Physical Conditions*

A. *Notice by Contractor*: If Contractor believes that any subsurface or physical condition that is uncovered or revealed at the Site:

1. is of such a nature as to establish that any Technical Data on which Contractor is entitled to rely as provided in Paragraph 5.03 is materially inaccurate;

2. is of such a nature as to require a change in the Drawings or Specifications;

3. differs materially from that shown or indicated in the Contract Documents; or

4. is of an unusual nature, and differs materially from conditions ordinarily encountered and generally recognized as inherent in work of the character provided for in the Contract Documents;

then Contractor shall, promptly after becoming aware thereof and before further disturbing the subsurface or physical conditions or performing any Work in connection therewith (except in an emergency as required by Paragraph 7.15), notify Owner and Engineer in writing about such condition **within 15 calendar days of discovery**. Contractor shall not further disturb such condition or perform any Work in connection therewith (except with respect to an emergency) until receipt of a written statement permitting Contractor to do so.

B. *Engineer's Review*: After receipt of written notice as required by the preceding paragraph, Engineer will promptly review the subsurface or physical condition in question; determine whether it is necessary for Owner to obtain additional exploration or tests with respect to the condition; conclude whether the condition falls within any one or more of the differing site condition categories in Paragraph 5.04.A; obtain any pertinent cost or schedule information from Contractor; prepare recommendations to Owner regarding the Contractor's resumption of Work in connection with the subsurface or physical condition in question and the need for any change in the Drawings or Specifications; and advise Owner in writing of Engineer's findings, conclusions, and recommendations.

C. *Owner's Statement to Contractor Regarding Site Condition*: After receipt of Engineer's written findings, conclusions, and recommendations, Owner shall issue a written statement to Contractor (with a copy to Engineer) regarding the subsurface or physical condition in question, addressing the resumption of Work in connection with such condition, indicating whether any change in the Drawings or Specifications will be made, and adopting or rejecting Engineer's written findings, conclusions, and recommendations, in whole or in part.

D. *Early Resumption of Work*: If at any time Engineer determines that Work in connection with the subsurface or physical condition in question may resume prior to completion of Engineer's review or Owner's issuance of its statement to Contractor, because the condition in question has been adequately documented, and analyzed on a preliminary basis, then the Engineer may at its discretion instruct Contractor to resume such Work.

E. *Possible Price and Times Adjustments*

1. Contractor shall be entitled to an equitable adjustment in Contract Price or Contract Times, to the extent that the existence of a differing subsurface or physical condition, or any related delay, disruption, or interference, causes an increase or decrease in

Copyright© 2018 National Society of Professional Engineers, American Council of Engineering Companies, and American Society of Civil Engineers. All rights reserved.

Contractor's cost of, or time required for, performance of the Work; subject, however, to the following:

a. Such condition must fall within any one or more of the categories described in Paragraph 5.04.A;

b. With respect to Work that is paid for on a unit price basis, any adjustment in Contract Price will be subject to the provisions of Paragraph 13.03; and,

c. Contractor's entitlement to an adjustment of the Contract Times is subject to the provisions of Paragraphs 4.05.D and 4.05.E.

2. Contractor shall not be entitled to any adjustment in the Contract Price or Contract Times with respect to a subsurface or physical condition if:

a. Contractor knew of the existence of such condition at the time Contractor made a commitment to Owner with respect to Contract Price and Contract Times by the submission of a Bid or becoming bound under a negotiated contract, or otherwise;

b. The existence of such condition reasonably could have been discovered or revealed as a result of any examination, investigation, exploration, test, or study of the Site and contiguous areas expressly required by the Bidding Requirements or Contract Documents to be conducted by or for Contractor prior to Contractor's making such commitment; or

c. Contractor failed to give the written notice required by Paragraph 5.04.A.

3. If Owner and Contractor agree regarding Contractor's entitlement to and the amount or extent of any adjustment in the Contract Price or Contract Times, then any such adjustment will be set forth in a Change Order.

4. Contractor may submit a Change Proposal regarding its entitlement to or the amount or extent of any adjustment in the Contract Price or Contract Times, no later than 30 days after Owner's issuance of the Owner's written statement to Contractor regarding the subsurface or physical condition in question.

F. *Underground Facilities; Hazardous Environmental Conditions*: Paragraph 5.05 governs rights and responsibilities regarding the presence or location of Underground Facilities. Paragraph 5.06 governs rights and responsibilities regarding Hazardous Environmental Conditions. The provisions of Paragraphs 5.03 and 5.04 are not applicable to the presence or location of Underground Facilities, or to Hazardous Environmental Conditions.

5.05 *Underground Facilities*

A. *Contractor's Responsibilities*: Unless it is otherwise expressly provided in the Supplementary Conditions, the cost of all of the following are included in the Contract Price, and Contractor shall have full responsibility for:

1. reviewing and checking all information and data regarding existing Underground Facilities at the Site;

2. complying with applicable state and local utility damage prevention Laws and Regulations;

Copyright© 2018 National Society of Professional Engineers, American Council of Engineering Companies, and American Society of Civil Engineers. All rights reserved.

3. verifying the actual location of those Underground Facilities shown or indicated in the Contract Documents as being within the area affected by the Work, by exposing such Underground Facilities during the course of construction;

4. coordination of the Work with the owners (including Owner) of such Underground Facilities, during construction; and

5. the safety and protection of all existing Underground Facilities at the Site, and repairing any damage thereto resulting from the Work.

B. *Notice by Contractor*: If Contractor believes that an Underground Facility that is uncovered or revealed at the Site was not shown or indicated on the Drawings, or was not shown or indicated on the Drawings with reasonable accuracy, then Contractor shall, promptly after becoming aware thereof and before further disturbing conditions affected thereby or performing any Work in connection therewith (except in an emergency as required by Paragraph 7.15), notify Owner and Engineer in writing regarding such Underground Facility.

C. *Engineer's Review*: Engineer will:

1. promptly review the Underground Facility and conclude whether such Underground Facility was not shown or indicated on the Drawings, or was not shown or indicated with reasonable accuracy;

2. identify and communicate with the owner of the Underground Facility; prepare recommendations to Owner (and if necessary issue any preliminary instructions to Contractor) regarding the Contractor's resumption of Work in connection with the Underground Facility in question;

3. obtain any pertinent cost or schedule information from Contractor; determine the extent, if any, to which a change is required in the Drawings or Specifications to reflect and document the consequences of the existence or location of the Underground Facility; and

4. advise Owner in writing of Engineer's findings, conclusions, and recommendations.

During such time, Contractor shall be responsible for the safety and protection of such Underground Facility.

D. *Owner's Statement to Contractor Regarding Underground Facility*: After receipt of Engineer's written findings, conclusions, and recommendations, Owner shall issue a written statement to Contractor (with a copy to Engineer) regarding the Underground Facility in question addressing the resumption of Work in connection with such Underground Facility, indicating whether any change in the Drawings or Specifications will be made, and adopting or rejecting Engineer's written findings, conclusions, and recommendations in whole or in part.

E. *Early Resumption of Work*: If at any time Engineer determines that Work in connection with the Underground Facility may resume prior to completion of Engineer's review or Owner's issuance of its statement to Contractor, because the Underground Facility in question and conditions affected by its presence have been adequately documented, and analyzed on a preliminary basis, then the Engineer may at its discretion instruct Contractor to resume such Work.

F. *Possible Price and Times Adjustments*

1. Contractor shall be entitled to an equitable adjustment in the Contract Price or Contract Times, to the extent that any existing Underground Facility at the Site that was not shown

Copyright© 2018 National Society of Professional Engineers, American Council of Engineering Companies, and American Society of Civil Engineers. All rights reserved.

or indicated on the Drawings, or was not shown or indicated with reasonable accuracy, or any related delay, disruption, or interference, causes an increase or decrease in Contractor's cost of, or time required for, performance of the Work; subject, however, to the following:

a. With respect to Work that is paid for on a unit price basis, any adjustment in Contract Price will be subject to the provisions of Paragraph 13.03;

b. Contractor's entitlement to an adjustment of the Contract Times is subject to the provisions of Paragraphs 4.05.D and 4.05.E; and

c. Contractor gave the notice required in Paragraph 5.05.B.

2. If Owner and Contractor agree regarding Contractor's entitlement to and the amount or extent of any adjustment in the Contract Price or Contract Times, then any such adjustment will be set forth in a Change Order.

3. Contractor may submit a Change Proposal regarding its entitlement to or the amount or extent of any adjustment in the Contract Price or Contract Times, no later than 30 days after Owner's issuance of the Owner's written statement to Contractor regarding the Underground Facility in question.

4. The information and data shown or indicated on the Drawings with respect to existing Underground Facilities at the Site is based on information and data (a) furnished by the owners of such Underground Facilities, or by others, (b) obtained from available records, or (c) gathered in an investigation conducted in accordance with the current edition of ASCE 38, Standard Guideline for the Collection and Depiction of Existing Subsurface Utility Data, by the American Society of Civil Engineers. If such information or data is incorrect or incomplete, Contractor's remedies are limited to those set forth in this Paragraph 5.05.F.

5.06 *Hazardous Environmental Conditions at Site*

A. *Reports and Drawings*: The Supplementary Conditions identify:

1. those reports known to Owner relating to Hazardous Environmental Conditions that have been identified at or adjacent to the Site;

2. drawings known to Owner relating to Hazardous Environmental Conditions that have been identified at or adjacent to the Site; and

3. Technical Data contained in such reports and drawings.

B. *Reliance by Contractor on Technical Data Authorized*: Contractor may rely upon the accuracy of the Technical Data expressly identified in the Supplementary Conditions with respect to such reports and drawings, but such reports and drawings are not Contract Documents. If no such express identification has been made, then Contractor may rely on the accuracy of the Technical Data as defined in Paragraph 1.01.A.46.b. Except for such reliance on Technical Data, Contractor may not rely upon or make any claim against Owner or Engineer, or any of their officers, directors, members, partners, employees, agents, consultants, or subcontractors, with respect to:

1. the completeness of such reports and drawings for Contractor's purposes, including, but not limited to, any aspects of the means, methods, techniques, sequences and procedures

Copyright© 2018 National Society of Professional Engineers, American Council of Engineering Companies, and American Society of Civil Engineers. All rights reserved.

of construction to be employed by Contractor, and safety precautions and programs incident thereto;

2. other data, interpretations, opinions, and information contained in such reports or shown or indicated in such drawings; or

3. any Contractor interpretation of or conclusion drawn from any Technical Data or any such other data, interpretations, opinions or information.

C. Contractor shall not be responsible for removing or remediating any Hazardous Environmental Condition encountered, uncovered, or revealed at the Site unless such removal or remediation is expressly identified in the Contract Documents to be within the scope of the Work.

D. Contractor shall be responsible for controlling, containing, and duly removing all Constituents of Concern brought to the Site by Contractor, Subcontractors, Suppliers, or anyone else for whom Contractor is responsible, and for any associated costs; and for the costs of removing and remediating any Hazardous Environmental Condition created by the presence of any such Constituents of Concern.

E. If Contractor encounters, uncovers, or reveals a Hazardous Environmental Condition whose removal or remediation is not expressly identified in the Contract Documents as being within the scope of the Work, or if Contractor or anyone for whom Contractor is responsible creates a Hazardous Environmental Condition, then Contractor shall immediately: (1) secure or otherwise isolate such condition; (2) stop all Work in connection with such condition and in any area affected thereby (except in an emergency as required by Paragraph 7.15); and (3) notify Owner and Engineer (and promptly thereafter confirm such notice in writing). Owner shall promptly consult with Engineer concerning the necessity for Owner to retain a qualified expert to evaluate such condition or take corrective action, if any. Promptly after consulting with Engineer, Owner shall take such actions as are necessary to permit Owner to timely obtain required permits and provide Contractor the written notice required by Paragraph 5.06.F. If Contractor or anyone for whom Contractor is responsible created the Hazardous Environmental Condition in question, then Owner may remove and remediate the Hazardous Environmental Condition, and impose a set-off against payments to account for the associated costs.

F. Contractor shall not resume Work in connection with such Hazardous Environmental Condition or in any affected area until after Owner has obtained any required permits related thereto, and delivered written notice to Contractor either (1) specifying that such condition and any affected area is or has been rendered safe for the resumption of Work, or (2) specifying any special conditions under which such Work may be resumed safely.

G. If Owner and Contractor cannot agree as to entitlement to or on the amount or extent, if any, of any adjustment in Contract Price or Contract Times, as a result of such Work stoppage, such special conditions under which Work is agreed to be resumed by Contractor, or any costs or expenses incurred in response to the Hazardous Environmental Condition, then within 30 days of Owner's written notice regarding the resumption of Work, Contractor may submit a Change Proposal, or Owner may impose a set-off. Entitlement to any such adjustment is subject to the provisions of Paragraphs 4.05.D, 4.05.E, 11.07, and 11.08.

H. If, after receipt of such written notice, Contractor does not agree to resume such Work based on a reasonable belief it is unsafe, or does not agree to resume such Work under such special

Copyright© 2018 National Society of Professional Engineers, American Council of Engineering Companies, and American Society of Civil Engineers. All rights reserved.

conditions, then Owner may order the portion of the Work that is in the area affected by such condition to be deleted from the Work, following the contractual change procedures in Article 11. Owner may have such deleted portion of the Work performed by Owner's own forces or others in accordance with Article 8.

I. To the fullest extent permitted by Laws and Regulations, Owner shall indemnify and hold harmless Contractor, Subcontractors, and Engineer, and the officers, directors, members, partners, employees, agents, consultants, and subcontractors of each and any of them, from and against all claims, costs, losses, and damages (including but not limited to all fees and charges of engineers, architects, attorneys, and other professionals, and all court, arbitration, or other dispute resolution costs) arising out of or relating to a Hazardous Environmental Condition, provided that such Hazardous Environmental Condition (1) was not shown or indicated in the Drawings, Specifications, or other Contract Documents, identified as Technical Data entitled to limited reliance pursuant to Paragraph 5.06.B, or identified in the Contract Documents to be included within the scope of the Work, and (2) was not created by Contractor or by anyone for whom Contractor is responsible. Nothing in this Paragraph 5.06.I obligates Owner to indemnify any individual or entity from and against the consequences of that individual's or entity's own negligence.

J. To the fullest extent permitted by Laws and Regulations, Contractor shall indemnify and hold harmless Owner and Engineer, and the officers, directors, members, partners, employees, agents, consultants, and subcontractors of each and any of them, from and against all claims, costs, losses, and damages (including but not limited to all fees and charges of engineers, architects, attorneys, and other professionals and all court or arbitration or other dispute resolution costs) arising out of or relating to the failure to control, contain, or remove a Constituent of Concern brought to the Site by Contractor or by anyone for whom Contractor is responsible, or to a Hazardous Environmental Condition created by Contractor or by anyone for whom Contractor is responsible. Nothing in this Paragraph 5.06.J obligates Contractor to indemnify any individual or entity from and against the consequences of that individual's or entity's own negligence.

K. The provisions of Paragraphs 5.03, 5.04, and 5.05 do not apply to the presence of Constituents of Concern or to a Hazardous Environmental Condition uncovered or revealed at the Site.

ARTICLE 6—BONDS AND INSURANCE

6.01 *Performance, Payment, and Other Bonds*

A. Contractor shall furnish a performance bond and a payment bond, each in an amount at least equal to the Contract Price, as security for the faithful performance and payment of Contractor's obligations under the Contract. These bonds must remain in effect until one year after the date when final payment becomes due or until completion of the correction period specified in Paragraph 15.08, whichever is later, except as provided otherwise by Laws or Regulations, the terms of a prescribed bond form, the Supplementary Conditions, or other provisions of the Contract.

B. Contractor shall also furnish such other bonds (if any) as are required by the Supplementary Conditions or other provisions of the Contract.

C. All bonds must be in the form included in the Bidding Documents or otherwise specified by Owner prior to execution of the Contract, except as provided otherwise by Laws or

Copyright© 2018 National Society of Professional Engineers, American Council of Engineering Companies, and American Society of Civil Engineers. All rights reserved.

Regulations, and must be issued and signed by a surety named in "Companies Holding Certificates of Authority as Acceptable Sureties on Federal Bonds and as Acceptable Reinsuring Companies" as published in Department Circular 570 (as amended and supplemented) by the Bureau of the Fiscal Service, U.S. Department of the Treasury. A bond signed by an agent or attorney-in-fact must be accompanied by a certified copy of that individual's authority to bind the surety. The evidence of authority must show that it is effective on the date the agent or attorney-in-fact signed the accompanying bond.

D. Contractor shall obtain the required bonds from surety companies that are duly licensed or authorized, in the state or jurisdiction in which the Project is located, to issue bonds in the required amounts.

E. If the surety on a bond furnished by Contractor is declared bankrupt or becomes insolvent, or the surety ceases to meet the requirements above, then Contractor shall promptly notify Owner and Engineer in writing and shall, within 20 days after the event giving rise to such notification, provide another bond and surety, both of which must comply with the bond and surety requirements above.

F. If Contractor has failed to obtain a required bond, Owner may exclude the Contractor from the Site and exercise Owner's termination rights under Article 16.

G. Upon request to Owner from any Subcontractor, Supplier, or other person or entity claiming to have furnished labor, services, materials, or equipment used in the performance of the Work, Owner shall provide a copy of the payment bond to such person or entity.

H. Upon request to Contractor from any Subcontractor, Supplier, or other person or entity claiming to have furnished labor, services, materials, or equipment used in the performance of the Work, Contractor shall provide a copy of the payment bond to such person or entity.

6.02 *Insurance—General Provisions*

A. Owner and Contractor shall obtain and maintain insurance as required in this article and in the Supplementary Conditions.

B. All insurance required by the Contract to be purchased and maintained by Owner or Contractor shall be obtained from insurance companies that are duly licensed or authorized in the state or jurisdiction in which the Project is located to issue insurance policies for the required limits and coverages. Unless a different standard is indicated in the Supplementary Conditions, all companies that provide insurance policies required under this Contract shall have an A.M. Best rating of A-VII or better.

C. Alternative forms of insurance coverage, including but not limited to self-insurance and "Occupational Accident and Excess Employer's Indemnity Policies," are not sufficient to meet the insurance requirements of this Contract, unless expressly allowed in the Supplementary Conditions.

D. Contractor shall deliver to Owner, with copies to each additional insured identified in the Contract, certificates of insurance and endorsements establishing that Contractor has obtained and is maintaining the policies and coverages required by the Contract. Upon request by Owner or any other insured, Contractor shall also furnish other evidence of such required insurance, including but not limited to copies of policies, documentation of applicable self-insured retentions (if allowed) and deductibles, full disclosure of all relevant exclusions, and evidence of insurance required to be purchased and maintained by

Copyright© 2018 National Society of Professional Engineers, American Council of Engineering Companies, and American Society of Civil Engineers. All rights reserved.

Subcontractors or Suppliers. In any documentation furnished under this provision, Contractor, Subcontractors, and Suppliers may block out (redact) (1) any confidential premium or pricing information and (2) any wording specific to a project or jurisdiction other than those applicable to this Contract.

E. Owner shall deliver to Contractor, with copies to each additional insured identified in the Contract, certificates of insurance and endorsements establishing that Owner has obtained and is maintaining the policies and coverages required of Owner by the Contract (if any). Upon request by Contractor or any other insured, Owner shall also provide other evidence of such required insurance (if any), including but not limited to copies of policies, documentation of applicable self-insured retentions (if allowed) and deductibles, and full disclosure of all relevant exclusions. In any documentation furnished under this provision, Owner may block out (redact) (1) any confidential premium or pricing information and (2) any wording specific to a project or jurisdiction other than those relevant to this Contract.

F. Failure of Owner or Contractor to demand such certificates or other evidence of the other party's full compliance with these insurance requirements, or failure of Owner or Contractor to identify a deficiency in compliance from the evidence provided, will not be construed as a waiver of the other party's obligation to obtain and maintain such insurance.

G. In addition to the liability insurance required to be provided by Contractor, the Owner, at Owner's option, may purchase and maintain Owner's own liability insurance. Owner's liability policies, if any, operate separately and independently from policies required to be provided by Contractor, and Contractor cannot rely upon Owner's liability policies for any of Contractor's obligations to the Owner, Engineer, or third parties.

H. Contractor shall require:

1. Subcontractors to purchase and maintain worker's compensation, commercial general liability, and other insurance that is appropriate for their participation in the Project, and to name as additional insureds Owner and Engineer (and any other individuals or entities identified in the Supplementary Conditions as additional insureds on Contractor's liability policies) on each Subcontractor's commercial general liability insurance policy; and

2. Suppliers to purchase and maintain insurance that is appropriate for their participation in the Project.

I. If either party does not purchase or maintain the insurance required of such party by the Contract, such party shall notify the other party in writing of such failure to purchase prior to the start of the Work, or of such failure to maintain prior to any change in the required coverage.

J. If Contractor has failed to obtain and maintain required insurance, Contractor's entitlement to enter or remain at the Site will end immediately, and Owner may impose an appropriate set-off against payment for any associated costs (including but not limited to the cost of purchasing necessary insurance coverage), and exercise Owner's termination rights under Article 16.

K. Without prejudice to any other right or remedy, if a party has failed to obtain required insurance, the other party may elect (but is in no way obligated) to obtain equivalent insurance to protect such other party's interests at the expense of the party who was required to provide such coverage, and the Contract Price will be adjusted accordingly.

Copyright© 2018 National Society of Professional Engineers, American Council of Engineering Companies, and American Society of Civil Engineers. All rights reserved.

L. Owner does not represent that insurance coverage and limits established in this Contract necessarily will be adequate to protect Contractor or Contractor's interests. Contractor is responsible for determining whether such coverage and limits are adequate to protect its interests, and for obtaining and maintaining any additional insurance that Contractor deems necessary.

M. The insurance and insurance limits required herein will not be deemed as a limitation on Contractor's liability, or that of its Subcontractors or Suppliers, under the indemnities granted to Owner and other individuals and entities in the Contract or otherwise.

N. All the policies of insurance required to be purchased and maintained under this Contract will contain a provision or endorsement that the coverage afforded will not be canceled, or renewal refused, until at least 10 days prior written notice has been given to the purchasing policyholder. Within three days of receipt of any such written notice, the purchasing policyholder shall provide a copy of the notice to each other insured and Engineer.

6.03 *Contractor's Insurance*

A. *Required Insurance*: Contractor shall purchase and maintain Worker's Compensation, Commercial General Liability, and other insurance pursuant to the specific requirements of the Supplementary Conditions.

B. *General Provisions*: The policies of insurance required by this Paragraph 6.03 as supplemented must:

1. include at least the specific coverages required;

2. be written for not less than the limits provided, or those required by Laws or Regulations, whichever is greater;

3. remain in effect at least until the Work is complete (as set forth in Paragraph 15.06.D), and longer if expressly required elsewhere in this Contract, and at all times thereafter when Contractor may be correcting, removing, or replacing defective Work as a warranty or correction obligation, or otherwise, or returning to the Site to conduct other tasks arising from the Contract;

4. apply with respect to the performance of the Work, whether such performance is by Contractor, any Subcontractor or Supplier, or by anyone directly or indirectly employed by any of them to perform any of the Work, or by anyone for whose acts any of them may be liable; and

5. include all necessary endorsements to support the stated requirements.

C. *Additional Insureds*: The Contractor's commercial general liability, automobile liability, employer's liability, umbrella or excess, pollution liability, and unmanned aerial vehicle liability policies, if required by this Contract, must:

1. include and list as additional insureds Owner and Engineer, and any individuals or entities identified as additional insureds in the Supplementary Conditions;

2. include coverage for the respective officers, directors, members, partners, employees, and consultants of all such additional insureds;

3. afford primary coverage to these additional insureds for all claims covered thereby (including as applicable those arising from both ongoing and completed operations);

Copyright© 2018 National Society of Professional Engineers, American Council of Engineering Companies, and American Society of Civil Engineers. All rights reserved.

4. not seek contribution from insurance maintained by the additional insured; and

5. as to commercial general liability insurance, apply to additional insureds with respect to liability caused in whole or in part by Contractor's acts or omissions, or the acts and omissions of those working on Contractor's behalf, in the performance of Contractor's operations.

6.04 *Builder's Risk and Other Property Insurance*

A. *Builder's Risk*: Unless otherwise provided in the Supplementary Conditions, Contractor shall purchase and maintain builder's risk insurance upon the Work on a completed value basis, in the amount of the Work's full insurable replacement cost (subject to such deductible amounts as may be provided in the Supplementary Conditions or required by Laws and Regulations). The specific requirements applicable to the builder's risk insurance are set forth in the Supplementary Conditions.

B. *Property Insurance for Facilities of Owner Where Work Will Occur*: Owner is responsible for obtaining and maintaining property insurance covering each existing structure, building, or facility in which any part of the Work will occur, or to which any part of the Work will attach or be adjoined. Such property insurance will be written on a special perils (all-risk) form, on a replacement cost basis, providing coverage consistent with that required for the builder's risk insurance, and will be maintained until the Work is complete, as set forth in Paragraph 15.06.D.

C. *Property Insurance for Substantially Complete Facilities*: Promptly after Substantial Completion, and before actual occupancy or use of the substantially completed Work, Owner will obtain property insurance for such substantially completed Work, and maintain such property insurance at least until the Work is complete, as set forth in Paragraph 15.06.D. Such property insurance will be written on a special perils (all-risk) form, on a replacement cost basis, and provide coverage consistent with that required for the builder's risk insurance. The builder's risk insurance may terminate upon written confirmation of Owner's procurement of such property insurance.

D. *Partial Occupancy or Use by Owner*: If Owner will occupy or use a portion or portions of the Work prior to Substantial Completion of all the Work, as provided in Paragraph 15.04, then Owner (directly, if it is the purchaser of the builder's risk policy, or through Contractor) will provide advance notice of such occupancy or use to the builder's risk insurer, and obtain an endorsement consenting to the continuation of coverage prior to commencing such partial occupancy or use.

E. *Insurance of Other Property; Additional Insurance*: If the express insurance provisions of the Contract do not require or address the insurance of a property item or interest, then the entity or individual owning such property item will be responsible for insuring it. If Contractor elects to obtain other special insurance to be included in or supplement the builder's risk or property insurance policies provided under this Paragraph 6.04, it may do so at Contractor's expense.

6.05 *Property Losses; Subrogation*

A. The builder's risk insurance policy purchased and maintained in accordance with Paragraph 6.04 (or an installation floater policy if authorized by the Supplementary Conditions), will contain provisions to the effect that in the event of payment of any loss or damage the insurer will have no rights of recovery against any insureds thereunder, or against

Copyright© 2018 National Society of Professional Engineers, American Council of Engineering Companies, and American Society of Civil Engineers. All rights reserved.

Engineer or its consultants, or their officers, directors, members, partners, employees, agents, consultants, or subcontractors.

1. Owner and Contractor waive all rights against each other and the respective officers, directors, members, partners, employees, agents, consultants, and subcontractors of each and any of them, for all losses and damages caused by, arising out of, or resulting from any of the perils, risks, or causes of loss covered by such policies and any other property insurance applicable to the Work; and, in addition, waive all such rights against Engineer, its consultants, all individuals or entities identified in the Supplementary Conditions as builder's risk or installation floater insureds, and the officers, directors, members, partners, employees, agents, consultants, and subcontractors of each and any of them, under such policies for losses and damages so caused.
2. None of the above waivers extends to the rights that any party making such waiver may have to the proceeds of insurance held by Owner or Contractor as trustee or fiduciary, or otherwise payable under any policy so issued.

B. Any property insurance policy maintained by Owner covering any loss, damage, or consequential loss to Owner's existing structures, buildings, or facilities in which any part of the Work will occur, or to which any part of the Work will attach or adjoin; to adjacent structures, buildings, or facilities of Owner; or to part or all of the completed or substantially completed Work, during partial occupancy or use pursuant to Paragraph 15.04, after Substantial Completion pursuant to Paragraph 15.03, or after final payment pursuant to Paragraph 15.06, will contain provisions to the effect that in the event of payment of any loss or damage the insurer will have no rights of recovery against any insureds thereunder, or against Contractor, Subcontractors, or Engineer, or the officers, directors, members, partners, employees, agents, consultants, or subcontractors of each and any of them, and that the insured is allowed to waive the insurer's rights of subrogation in a written contract executed prior to the loss, damage, or consequential loss.

1. Owner waives all rights against Contractor, Subcontractors, and Engineer, and the officers, directors, members, partners, employees, agents, consultants and subcontractors of each and any of them, for all losses and damages caused by, arising out of, or resulting from fire or any of the perils, risks, or causes of loss covered by such policies.

C. The waivers in this Paragraph 6.05 include the waiver of rights due to business interruption, loss of use, or other consequential loss extending beyond direct physical loss or damage to Owner's property or the Work caused by, arising out of, or resulting from fire or other insured peril, risk, or cause of loss.

D. Contractor shall be responsible for assuring that each Subcontract contains provisions whereby the Subcontractor waives all rights against Owner, Contractor, all individuals or entities identified in the Supplementary Conditions as insureds, the Engineer and its consultants, and the officers, directors, members, partners, employees, agents, consultants, and subcontractors of each and any of them, for all losses and damages caused by, arising out of, relating to, or resulting from fire or other peril, risk, or cause of loss covered by builder's risk insurance, installation floater, and any other property insurance applicable to the Work.

Copyright© 2018 National Society of Professional Engineers, American Council of Engineering Companies, and American Society of Civil Engineers. All rights reserved.

6.06 *Receipt and Application of Property Insurance Proceeds*

A. Any insured loss under the builder's risk and other policies of property insurance required by Paragraph 6.04 will be adjusted and settled with the named insured that purchased the policy. Such named insured shall act as fiduciary for the other insureds, and give notice to such other insureds that adjustment and settlement of a claim is in progress. Any other insured may state its position regarding a claim for insured loss in writing within 15 days after notice of such claim.

B. Proceeds for such insured losses may be made payable by the insurer either jointly to multiple insureds, or to the named insured that purchased the policy in its own right and as fiduciary for other insureds, subject to the requirements of any applicable mortgage clause. A named insured receiving insurance proceeds under the builder's risk and other policies of insurance required by Paragraph 6.04 shall maintain such proceeds in a segregated account, and distribute such proceeds in accordance with such agreement as the parties in interest may reach, or as otherwise required under the dispute resolution provisions of this Contract or applicable Laws and Regulations.

C. If no other special agreement is reached, Contractor shall repair or replace the damaged Work, using allocated insurance proceeds.

ARTICLE 7—CONTRACTOR'S RESPONSIBILITIES

7.01 *Contractor's Means and Methods of Construction*

A. Contractor shall be solely responsible for the means, methods, techniques, sequences, and procedures of construction.

B. If the Contract Documents note, or Contractor determines, that professional engineering or other design services are needed to carry out Contractor's responsibilities for construction means, methods, techniques, sequences, and procedures, or for Site safety, then Contractor shall cause such services to be provided by a properly licensed design professional, at Contractor's expense. Such services are not Owner-delegated professional design services under this Contract, and neither Owner nor Engineer has any responsibility with respect to (1) Contractor's determination of the need for such services, (2) the qualifications or licensing of the design professionals retained or employed by Contractor, (3) the performance of such services, or (4) any errors, omissions, or defects in such services.

7.02 *Supervision and Superintendence*

A. Contractor shall supervise, inspect, and direct the Work competently and efficiently, devoting such attention thereto and applying such skills and expertise as may be necessary to perform the Work in accordance with the Contract Documents.

B. At all times during the progress of the Work, Contractor shall assign a competent resident superintendent who will not be replaced without written notice to Owner and Engineer except under extraordinary circumstances.

7.03 *Labor; Working Hours*

A. Contractor shall provide competent, suitably qualified personnel to survey and lay out the Work and perform construction as required by the Contract Documents. Contractor shall maintain good discipline and order at the Site.

Copyright© 2018 National Society of Professional Engineers, American Council of Engineering Companies, and American Society of Civil Engineers. All rights reserved.

B. Contractor shall be fully responsible to Owner and Engineer for all acts and omissions of Contractor's employees; of Suppliers and Subcontractors, and their employees; and of any other individuals or entities performing or furnishing any of the Work, just as Contractor is responsible for Contractor's own acts and omissions.

C. Except as otherwise required for the safety or protection of persons or the Work or property at the Site or adjacent thereto, and except as otherwise stated in the Contract Documents, all Work at the Site will be performed during regular working hours, Monday through Friday. Contractor will not perform Work on a Saturday, Sunday, or any legal holiday. Contractor may perform Work outside regular working hours or on Saturdays, Sundays, or legal holidays only with Owner's written consent, which will not be unreasonably withheld.

7.04 *Services, Materials, and Equipment*

A. Unless otherwise specified in the Contract Documents, Contractor shall provide and assume full responsibility for all services, materials, equipment, labor, transportation, construction equipment and machinery, tools, appliances, fuel, power, light, heat, telephone, water, sanitary facilities, temporary facilities, and all other facilities and incidentals necessary for the performance, testing, start up, and completion of the Work, whether or not such items are specifically called for in the Contract Documents.

B. All materials and equipment incorporated into the Work must be new and of good quality, except as otherwise provided in the Contract Documents. All special warranties and guarantees required by the Specifications will expressly run to the benefit of Owner. If required by Engineer, Contractor shall furnish satisfactory evidence (including reports of required tests) as to the source, kind, and quality of materials and equipment.

C. All materials and equipment must be stored, applied, installed, connected, erected, protected, used, cleaned, and conditioned in accordance with instructions of the applicable Supplier, except as otherwise may be provided in the Contract Documents.

7.05 *"Or Equals"*

A. *Contractor's Request; Governing Criteria*: Whenever an item of equipment or material is specified or described in the Contract Documents by using the names of one or more proprietary items or specific Suppliers, the Contract Price has been based upon Contractor furnishing such item as specified. The specification or description of such an item is intended to establish the type, function, appearance, and quality required. Unless the specification or description contains or is followed by words reading that no like, equivalent, or "or equal" item is permitted, Contractor may request that Engineer authorize the use of other items of equipment or material, or items from other proposed Suppliers, under the circumstances described below.

1. If Engineer in its sole discretion determines that an item of equipment or material proposed by Contractor is functionally equal to that named and sufficiently similar so that no change in related Work will be required, Engineer will deem it an "or equal" item. For the purposes of this paragraph, a proposed item of equipment or material will be considered functionally equal to an item so named if:

a. in the exercise of reasonable judgment Engineer determines that the proposed item:

1) is at least equal in materials of construction, quality, durability, appearance, strength, and design characteristics;

Copyright© 2018 National Society of Professional Engineers, American Council of Engineering Companies, and American Society of Civil Engineers. All rights reserved.

2) will reliably perform at least equally well the function and achieve the results imposed by the design concept of the completed Project as a functioning whole;

3) has a proven record of performance and availability of responsive service; and

4) is not objectionable to Owner.

b. Contractor certifies that, if the proposed item is approved and incorporated into the Work:

1) there will be no increase in cost to the Owner or increase in Contract Times; and

2) the item will conform substantially to the detailed requirements of the item named in the Contract Documents.

B. *Contractor's Expense*: Contractor shall provide all data in support of any proposed "or equal" item at Contractor's expense.

C. *Engineer's Evaluation and Determination*: Engineer will be allowed a reasonable time to evaluate each "or-equal" request. Engineer may require Contractor to furnish additional data about the proposed "or-equal" item. Engineer will be the sole judge of acceptability. No "or-equal" item will be ordered, furnished, installed, or utilized until Engineer's review is complete and Engineer determines that the proposed item is an "or-equal," which will be evidenced by an approved Shop Drawing or other written communication. Engineer will advise Contractor in writing of any negative determination.

D. *Effect of Engineer's Determination*: Neither approval nor denial of an "or-equal" request will result in any change in Contract Price. The Engineer's denial of an "or-equal" request will be final and binding, and may not be reversed through an appeal under any provision of the Contract.

E. *Treatment as a Substitution Request*: If Engineer determines that an item of equipment or material proposed by Contractor does not qualify as an "or-equal" item, Contractor may request that Engineer consider the item a proposed substitute pursuant to Paragraph 7.06.

7.06 *Substitutes*

A. *Contractor's Request; Governing Criteria*: Unless the specification or description of an item of equipment or material required to be furnished under the Contract Documents contains or is followed by words reading that no substitution is permitted, Contractor may request that Engineer authorize the use of other items of equipment or material under the circumstances described below. To the extent possible such requests must be made before commencement of related construction at the Site.

1. Contractor shall submit sufficient information as provided below to allow Engineer to determine if the item of material or equipment proposed is functionally equivalent to that named and an acceptable substitute therefor. Engineer will not accept requests for review of proposed substitute items of equipment or material from anyone other than Contractor.

2. The requirements for review by Engineer will be as set forth in Paragraph 7.06.B, as supplemented by the Specifications, and as Engineer may decide is appropriate under the circumstances.

Copyright© 2018 National Society of Professional Engineers, American Council of Engineering Companies, and American Society of Civil Engineers. All rights reserved.

3. Contractor shall make written application to Engineer for review of a proposed substitute item of equipment or material that Contractor seeks to furnish or use. The application:

    a. will certify that the proposed substitute item will:

        1) perform adequately the functions and achieve the results called for by the general design;

        2) be similar in substance to the item specified; and

        3) be suited to the same use as the item specified.

    b. will state:

        1) the extent, if any, to which the use of the proposed substitute item will necessitate a change in Contract Times;

        2) whether use of the proposed substitute item in the Work will require a change in any of the Contract Documents (or in the provisions of any other direct contract with Owner for other work on the Project) to adapt the design to the proposed substitute item; and

        3) whether incorporation or use of the proposed substitute item in connection with the Work is subject to payment of any license fee or royalty.

    c. will identify:

        1) all variations of the proposed substitute item from the item specified; and

        2) available engineering, sales, maintenance, repair, and replacement services.

    d. will contain an itemized estimate of all costs or credits that will result directly or indirectly from use of such substitute item, including but not limited to changes in Contract Price, shared savings, costs of redesign, and claims of other contractors affected by any resulting change.

B. *Engineer's Evaluation and Determination*: Engineer will be allowed a reasonable time to evaluate each substitute request, and to obtain comments and direction from Owner. Engineer may require Contractor to furnish additional data about the proposed substitute item. Engineer will be the sole judge of acceptability. No substitute will be ordered, furnished, installed, or utilized until Engineer's review is complete and Engineer determines that the proposed item is an acceptable substitute. Engineer's determination will be evidenced by a Field Order or a proposed Change Order accounting for the substitution itself and all related impacts, including changes in Contract Price or Contract Times. Engineer will advise Contractor in writing of any negative determination.

C. *Special Guarantee*: Owner may require Contractor to furnish at Contractor's expense a special performance guarantee or other surety with respect to any substitute.

D. *Reimbursement of Engineer's Cost*: Engineer will record Engineer's costs in evaluating a substitute proposed or submitted by Contractor. Whether or not Engineer approves a substitute so proposed or submitted by Contractor, Contractor shall reimburse Owner for the reasonable charges of Engineer for evaluating each such proposed substitute. Contractor shall also reimburse Owner for the reasonable charges of Engineer for making changes in the Contract Documents (or in the provisions of any other direct contract with Owner) resulting from the acceptance of each proposed substitute.

Copyright© 2018 National Society of Professional Engineers, American Council of Engineering Companies, and American Society of Civil Engineers. All rights reserved.

E. *Contractor's Expense*: Contractor shall provide all data in support of any proposed substitute at Contractor's expense.

F. *Effect of Engineer's Determination*: If Engineer approves the substitution request, Contractor shall execute the proposed Change Order and proceed with the substitution. The Engineer's denial of a substitution request will be final and binding, and may not be reversed through an appeal under any provision of the Contract. Contractor may challenge the scope of reimbursement costs imposed under Paragraph 7.06.D, by timely submittal of a Change Proposal.

7.07 *Concerning Subcontractors and Suppliers*

A. Contractor may retain Subcontractors and Suppliers for the performance of parts of the Work. Such Subcontractors and Suppliers must be acceptable to Owner. The Contractor's retention of a Subcontractor or Supplier for the performance of parts of the Work will not relieve Contractor's obligation to Owner to perform and complete the Work in accordance with the Contract Documents.

B. **Deleted.**

C. Subsequent to the submittal of Contractor's Bid or final negotiation of the terms of the Contract, Owner may not require Contractor to retain any Subcontractor or Supplier to furnish or perform any of the Work against which Contractor has reasonable objection.

D. Prior to entry into any binding subcontract or purchase order, Contractor shall submit to Owner the identity of the proposed Subcontractor or Supplier (unless Owner has already deemed such proposed Subcontractor or Supplier acceptable during the bidding process or otherwise). Such proposed Subcontractor or Supplier shall be deemed acceptable to Owner unless Owner raises a substantive, reasonable objection within 5 days.

E. Owner may require the replacement of any Subcontractor or Supplier. Owner also may require Contractor to retain specific replacements; provided, however, that Owner may not require a replacement to which Contractor has a reasonable objection. If Contractor has submitted the identity of certain Subcontractors or Suppliers for acceptance by Owner, and Owner has accepted it (either in writing or by failing to make written objection thereto), then Owner may subsequently revoke the acceptance of any such Subcontractor or Supplier so identified solely on the basis of substantive, reasonable objection after due investigation. Contractor shall submit an acceptable replacement for the rejected Subcontractor or Supplier.

F. If Owner requires the replacement of any Subcontractor or Supplier retained by Contractor to perform any part of the Work, then Contractor shall be entitled to an adjustment in Contract Price or Contract Times, with respect to the replacement; and Contractor shall initiate a Change Proposal for such adjustment within 30 days of Owner's requirement of replacement.

G. No acceptance by Owner of any such Subcontractor or Supplier, whether initially or as a replacement, will constitute a waiver of the right of Owner to the completion of the Work in accordance with the Contract Documents.

H. On a monthly basis, Contractor shall submit to Engineer a complete list of all Subcontractors and Suppliers having a direct contract with Contractor, and of all other Subcontractors and Suppliers known to Contractor at the time of submittal.

Copyright© 2018 National Society of Professional Engineers, American Council of Engineering Companies, and American Society of Civil Engineers. All rights reserved.

I. Contractor shall be solely responsible for scheduling and coordinating the work of Subcontractors and Suppliers.

J. The divisions and sections of the Specifications and the identifications of any Drawings do not control Contractor in dividing the Work among Subcontractors or Suppliers, or in delineating the Work to be performed by any specific trade.

K. All Work performed for Contractor by a Subcontractor or Supplier must be pursuant to an appropriate contractual agreement that specifically binds the Subcontractor or Supplier to the applicable terms and conditions of the Contract for the benefit of Owner and Engineer.

L. Owner may furnish to any Subcontractor or Supplier, to the extent practicable, information about amounts paid to Contractor for Work performed for Contractor by the Subcontractor or Supplier.

M. Contractor shall restrict all Subcontractors and Suppliers from communicating with Engineer or Owner, except through Contractor or in case of an emergency, or as otherwise expressly allowed in this Contract.

7.08 *Patent Fees and Royalties*

A. Contractor shall pay all license fees and royalties and assume all costs incident to the use in the performance of the Work or the incorporation in the Work of any invention, design, process, product, or device which is the subject of patent rights or copyrights held by others. If an invention, design, process, product, or device is specified in the Contract Documents for use in the performance of the Work and if, to the actual knowledge of Owner or Engineer, its use is subject to patent rights or copyrights calling for the payment of any license fee or royalty to others, the existence of such rights will be disclosed in the Contract Documents.

B. To the fullest extent permitted by Laws and Regulations, Owner shall indemnify and hold harmless Contractor, and its officers, directors, members, partners, employees, agents, consultants, and subcontractors, from and against all claims, costs, losses, and damages (including but not limited to all fees and charges of engineers, architects, attorneys, and other professionals, and all court or arbitration or other dispute resolution costs) arising out of or relating to any infringement of patent rights or copyrights incident to the use in the performance of the Work or resulting from the incorporation in the Work of any invention, design, process, product, or device specified in the Contract Documents, but not identified as being subject to payment of any license fee or royalty to others required by patent rights or copyrights.

C. To the fullest extent permitted by Laws and Regulations, Contractor shall indemnify and hold harmless Owner and Engineer, and the officers, directors, members, partners, employees, agents, consultants and subcontractors of each and any of them, from and against all claims, costs, losses, and damages (including but not limited to all fees and charges of engineers, architects, attorneys, and other professionals and all court or arbitration or other dispute resolution costs) arising out of or relating to any infringement of patent rights or copyrights incident to the use in the performance of the Work or resulting from the incorporation in the Work of any invention, design, process, product, or device not specified in the Contract Documents.

Copyright© 2018 National Society of Professional Engineers, American Council of Engineering Companies, and American Society of Civil Engineers. All rights reserved.

7.09 *Permits*

A. Unless otherwise provided in the Contract Documents, Contractor shall obtain and pay for all construction permits, licenses, and certificates of occupancy. Owner shall assist Contractor, when necessary, in obtaining such permits and licenses. Contractor shall pay all governmental charges and inspection fees necessary for the prosecution of the Work which are applicable at the time of the submission of Contractor's Bid (or when Contractor became bound under a negotiated contract). Owner shall pay all charges of utility owners for connections for providing permanent service to the Work.

B. Contractor shall obtain a Construction General Permit in compliance with the National Pollution Discharge Elimination System.

7.10 *Taxes*

A. Contractor shall pay all sales, consumer, use, and other similar taxes required to be paid by Contractor in accordance with the Laws and Regulations of the place of the Project which are applicable during the performance of the Work.

7.11 *Laws and Regulations*

A. Contractor shall give all notices required by and shall comply with all Laws and Regulations applicable to the performance of the Work. Neither Owner nor Engineer shall be responsible for monitoring Contractor's compliance with any Laws or Regulations.

B. If Contractor performs any Work or takes any other action knowing or having reason to know that it is contrary to Laws or Regulations, Contractor shall bear all resulting costs and losses, and shall indemnify and hold harmless Owner and Engineer, and the officers, directors, members, partners, employees, agents, consultants, and subcontractors of each and any of them, from and against all claims, costs, losses, and damages (including but not limited to all fees and charges of engineers, architects, attorneys, and other professionals and all court or arbitration or other dispute resolution costs) arising out of or relating to such Work or other action. It is not Contractor's responsibility to make certain that the Work described in the Contract Documents is in accordance with Laws and Regulations, but this does not relieve Contractor of its obligations under Paragraph 3.03.

C. Owner or Contractor may give written notice to the other party of any changes after the submission of Contractor's Bid (or after the date when Contractor became bound under a negotiated contract) in Laws or Regulations having an effect on the cost or time of performance of the Work, including but not limited to changes in Laws or Regulations having an effect on procuring permits and on sales, use, value-added, consumption, and other similar taxes. If Owner and Contractor are unable to agree on entitlement to or on the amount or extent, if any, of any adjustment in Contract Price or Contract Times resulting from such changes, then within 30 days of such written notice Contractor may submit a Change Proposal, or Owner may initiate a Claim.

7.12 *Record Documents*

A. Contractor shall maintain in a safe place at the Site one printed record copy of all Drawings, Specifications, Addenda, Change Orders, Work Change Directives, Field Orders, written interpretations and clarifications, and approved Shop Drawings. Contractor shall keep such record documents in good order and annotate them to show changes made during construction. These record documents, together with all approved Samples, will be available

Copyright© 2018 National Society of Professional Engineers, American Council of Engineering Companies, and American Society of Civil Engineers. All rights reserved.

to Engineer for reference. Upon completion of the Work, Contractor shall deliver these record documents to Engineer.

7.13 *Safety and Protection*

A. Contractor shall be solely responsible for initiating, maintaining, and supervising all safety precautions and programs in connection with the Work. Such responsibility does not relieve Subcontractors of their responsibility for the safety of persons or property in the performance of their work, nor for compliance with applicable safety Laws and Regulations.

B. Contractor shall designate a qualified and experienced safety representative whose duties and responsibilities are the prevention of Work-related accidents and the maintenance and supervision of safety precautions and programs.

C. Contractor shall take all necessary precautions for the safety of, and shall provide the necessary protection to prevent damage, injury, or loss to:

1. all persons on the Site or who may be affected by the Work;

2. all the Work and materials and equipment to be incorporated therein, whether in storage on or off the Site; and

3. other property at the Site or adjacent thereto, including trees, shrubs, lawns, walks, pavements, roadways, structures, other work in progress, utilities, and Underground Facilities not designated for removal, relocation, or replacement in the course of construction.

D. All damage, injury, or loss to any property referred to in Paragraph 7.13.C.2 or 7.13.C.3 caused, directly or indirectly, in whole or in part, by Contractor, any Subcontractor, Supplier, or any other individual or entity directly or indirectly employed by any of them to perform any of the Work, or anyone for whose acts any of them may be liable, shall be remedied by Contractor at its expense (except damage or loss attributable to the fault of Drawings or Specifications or to the acts or omissions of Owner or Engineer or anyone employed by any of them, or anyone for whose acts any of them may be liable, and not attributable, directly or indirectly, in whole or in part, to the fault or negligence of Contractor or any Subcontractor, Supplier, or other individual or entity directly or indirectly employed by any of them).

E. Contractor shall comply with all applicable Laws and Regulations relating to the safety of persons or property, or to the protection of persons or property from damage, injury, or loss; and shall erect and maintain all necessary safeguards for such safety and protection.

F. Contractor shall notify Owner; the owners of adjacent property; the owners of Underground Facilities and other utilities (if the identity of such owners is known to Contractor); and other contractors and utility owners performing work at or adjacent to the Site, in writing, when Contractor knows that prosecution of the Work may affect them, and shall cooperate with them in the protection, removal, relocation, and replacement of their property or work in progress.

G. Contractor shall comply with the applicable requirements of Owner's safety programs, if any. Any Owner's safety programs that are applicable to the Work are identified or included in the Supplementary Conditions or Specifications.

Copyright© 2018 National Society of Professional Engineers, American Council of Engineering Companies, and American Society of Civil Engineers. All rights reserved.

H. Contractor shall inform Owner and Engineer of the specific requirements of Contractor's safety program with which Owner's and Engineer's employees and representatives must comply while at the Site.

I. Contractor's duties and responsibilities for safety and protection will continue until all the Work is completed, Engineer has issued a written notice to Owner and Contractor in accordance with Paragraph 15.06.C that the Work is acceptable, and Contractor has left the Site (except as otherwise expressly provided in connection with Substantial Completion).

J. Contractor's duties and responsibilities for safety and protection will resume whenever Contractor or any Subcontractor or Supplier returns to the Site to fulfill warranty or correction obligations, or to conduct other tasks arising from the Contract Documents.

7.14 *Hazard Communication Programs*

A. Contractor shall be responsible for coordinating any exchange of safety data sheets (formerly known as material safety data sheets) or other hazard communication information required to be made available to or exchanged between or among employers at the Site in accordance with Laws or Regulations.

7.15 *Emergencies*

A. In emergencies affecting the safety or protection of persons or the Work or property at the Site or adjacent thereto, Contractor is obligated to act to prevent damage, injury, or loss. Contractor shall give Engineer prompt written notice if Contractor believes that any significant changes in the Work or variations from the Contract Documents have been caused by an emergency, or are required as a result of Contractor's response to an emergency. If Engineer determines that a change in the Contract Documents is required because of an emergency or Contractor's response, a Work Change Directive or Change Order will be issued.

7.16 *Submittals*

A. *Shop Drawing and Sample Requirements*

1. Before submitting a Shop Drawing or Sample, Contractor shall:

a. review and coordinate the Shop Drawing or Sample with other Shop Drawings and Samples and with the requirements of the Work and the Contract Documents;

b. determine and verify:

1) all field measurements, quantities, dimensions, specified performance and design criteria, installation requirements, materials, catalog numbers, and similar information with respect to the Submittal;

2) the suitability of all materials and equipment offered with respect to the indicated application, fabrication, shipping, handling, storage, assembly, and installation pertaining to the performance of the Work; and

3) all information relative to Contractor's responsibilities for means, methods, techniques, sequences, and procedures of construction, and safety precautions and programs incident thereto;

c. confirm that the Submittal is complete with respect to all related data included in the Submittal.

Copyright© 2018 National Society of Professional Engineers, American Council of Engineering Companies, and American Society of Civil Engineers. All rights reserved.

2. Each Shop Drawing or Sample must bear a stamp or specific written certification that Contractor has satisfied Contractor's obligations under the Contract Documents with respect to Contractor's review of that Submittal, and that Contractor approves the Submittal.

3. With each Shop Drawing or Sample, Contractor shall give Engineer specific written notice of any variations that the Submittal may have from the requirements of the Contract Documents. This notice must be set forth in a written communication separate from the Submittal; and, in addition, in the case of a Shop Drawing by a specific notation made on the Shop Drawing itself.

B. *Submittal Procedures for Shop Drawings and Samples*: Contractor shall label and submit Shop Drawings and Samples to Engineer for review and approval in accordance with the accepted Schedule of Submittals.

1. *Shop Drawings*

a. Contractor shall submit the number of copies required in the Specifications.

b. Data shown on the Shop Drawings must be complete with respect to quantities, dimensions, specified performance and design criteria, materials, and similar data to show Engineer the services, materials, and equipment Contractor proposes to provide, and to enable Engineer to review the information for the limited purposes required by Paragraph 7.16.C.

2. *Samples*

a. Contractor shall submit the number of Samples required in the Specifications.

b. Contractor shall clearly identify each Sample as to material, Supplier, pertinent data such as catalog numbers, the use for which intended and other data as Engineer may require to enable Engineer to review the Submittal for the limited purposes required by Paragraph 7.16.C.

3. Where a Shop Drawing or Sample is required by the Contract Documents or the Schedule of Submittals, any related Work performed prior to Engineer's review and approval of the pertinent submittal will be at the sole expense and responsibility of Contractor.

C. *Engineer's Review of Shop Drawings and Samples*

1. Engineer will provide timely review of Shop Drawings and Samples in accordance with the accepted Schedule of Submittals. Engineer's review and approval will be only to determine if the items covered by the Submittals will, after installation or incorporation in the Work, comply with the requirements of the Contract Documents, and be compatible with the design concept of the completed Project as a functioning whole as indicated by the Contract Documents.

2. Engineer's review and approval will not extend to means, methods, techniques, sequences, or procedures of construction, or to safety precautions or programs incident thereto.

3. Engineer's review and approval of a separate item as such will not indicate approval of the assembly in which the item functions.

Copyright© 2018 National Society of Professional Engineers, American Council of Engineering Companies, and American Society of Civil Engineers. All rights reserved.

4. Engineer's review and approval of a Shop Drawing or Sample will not relieve Contractor from responsibility for any variation from the requirements of the Contract Documents unless Contractor has complied with the requirements of Paragraph 7.16.A.3 and Engineer has given written approval of each such variation by specific written notation thereof incorporated in or accompanying the Shop Drawing or Sample. Engineer will document any such approved variation from the requirements of the Contract Documents in a Field Order or other appropriate Contract modification.

5. Engineer's review and approval of a Shop Drawing or Sample will not relieve Contractor from responsibility for complying with the requirements of Paragraphs 7.16.A and B.

6. Engineer's review and approval of a Shop Drawing or Sample, or of a variation from the requirements of the Contract Documents, will not, under any circumstances, change the Contract Times or Contract Price, unless such changes are included in a Change Order.

7. Neither Engineer's receipt, review, acceptance, or approval of a Shop Drawing or Sample will result in such item becoming a Contract Document.

8. Contractor shall perform the Work in compliance with the requirements and commitments set forth in approved Shop Drawings and Samples, subject to the provisions of Paragraph 7.16.C.4.

D. *Resubmittal Procedures for Shop Drawings and Samples*

1. Contractor shall make corrections required by Engineer and shall return the required number of corrected copies of Shop Drawings and submit, as required, new Samples for review and approval. Contractor shall direct specific attention in writing to revisions other than the corrections called for by Engineer on previous Submittals.

2. Contractor shall furnish required Shop Drawing and Sample submittals with sufficient information and accuracy to obtain required approval of an item with no more than two resubmittals. Engineer will record Engineer's time for reviewing a third or subsequent resubmittal of a Shop Drawing or Sample, and Contractor shall be responsible for Engineer's charges to Owner for such time. Owner may impose a set-off against payments due Contractor to secure reimbursement for such charges.

3. If Contractor requests a change of a previously approved Shop Drawing or Sample, Contractor shall be responsible for Engineer's charges to Owner for its review time, and Owner may impose a set-off against payments due Contractor to secure reimbursement for such charges, unless the need for such change is beyond the control of Contractor.

E. *Submittals Other than Shop Drawings, Samples, and Owner-Delegated Designs*

1. The following provisions apply to all Submittals other than Shop Drawings, Samples, and Owner-delegated designs:

   a. Contractor shall submit all such Submittals to the Engineer in accordance with the Schedule of Submittals and pursuant to the applicable terms of the Contract Documents.

   b. Engineer will provide timely review of all such Submittals in accordance with the Schedule of Submittals and return such Submittals with a notation of either Accepted or Not Accepted. Any such Submittal that is not returned within the time established in the Schedule of Submittals will be deemed accepted.

Copyright© 2018 National Society of Professional Engineers, American Council of Engineering Companies, and American Society of Civil Engineers. All rights reserved.

c. Engineer's review will be only to determine if the Submittal is acceptable under the requirements of the Contract Documents as to general form and content of the Submittal.

d. If any such Submittal is not accepted, Contractor shall confer with Engineer regarding the reason for the non-acceptance, and resubmit an acceptable document.

2. Procedures for the submittal and acceptance of the Progress Schedule, the Schedule of Submittals, and the Schedule of Values are set forth in Paragraphs 2.03. 2.04, and 2.05.

F. Owner-delegated Designs: Submittals pursuant to Owner-delegated designs are governed by the provisions of Paragraph 7.19.

7.17 *Contractor's General Warranty and Guarantee*

A. Contractor warrants and guarantees to Owner that all Work will be in accordance with the Contract Documents and will not be defective. Engineer is entitled to rely on Contractor's warranty and guarantee.

B. Owner's rights under this warranty and guarantee are in addition to, and are not limited by, Owner's rights under the correction period provisions of Paragraph 15.08. The time in which Owner may enforce its warranty and guarantee rights under this Paragraph 7.17 is limited only by applicable Laws and Regulations restricting actions to enforce such rights; provided, however, that after the end of the correction period under Paragraph 15.08:

1. Owner shall give Contractor written notice of any defective Work within 60 days of the discovery that such Work is defective; and

2. Such notice will be deemed the start of an event giving rise to a Claim under Paragraph 12.01.B, such that any related Claim must be brought within 30 days of the notice.

C. Contractor's warranty and guarantee hereunder excludes defects or damage caused by:

1. abuse, or improper modification, maintenance, or operation, by persons other than Contractor, Subcontractors, Suppliers, or any other individual or entity for whom Contractor is responsible; or

2. normal wear and tear under normal usage.

D. Contractor's obligation to perform and complete the Work in accordance with the Contract Documents is absolute. None of the following will constitute an acceptance of Work that is not in accordance with the Contract Documents, a release of Contractor's obligation to perform the Work in accordance with the Contract Documents, or a release of Owner's warranty and guarantee rights under this Paragraph 7.17:

1. Observations by Engineer;

2. Recommendation by Engineer or payment by Owner of any progress or final payment;

3. The issuance of a certificate of Substantial Completion by Engineer or any payment related thereto by Owner;

4. Use or occupancy of the Work or any part thereof by Owner;

5. Any review and approval of a Shop Drawing or Sample submittal;

6. The issuance of a notice of acceptability by Engineer;

Copyright© 2018 National Society of Professional Engineers, American Council of Engineering Companies, and American Society of Civil Engineers. All rights reserved.

7. The end of the correction period established in Paragraph 15.08;

8. Any inspection, test, or approval by others; or

9. Any correction of defective Work by Owner.

E. If the Contract requires the Contractor to accept the assignment of a contract entered into by Owner, then the specific warranties, guarantees, and correction obligations contained in the assigned contract will govern with respect to Contractor's performance obligations to Owner for the Work described in the assigned contract.

7.18 *Indemnification*

A. To the fullest extent permitted by Laws and Regulations, and in addition to any other obligations of Contractor under the Contract or otherwise, Contractor shall indemnify and hold harmless Owner and Engineer, and the officers, directors, members, partners, employees, agents, consultants and subcontractors of each and any of them, from losses, damages, costs, and judgments (including but not limited to all fees and charges of engineers, architects, attorneys, and other professionals, and all court or arbitration or other dispute resolution costs) arising from third-party claims or actions relating to or resulting from the performance or furnishing of the Work, provided that any such claim, action, loss, cost, judgment or damage is attributable to bodily injury, sickness, disease, or death, or to damage to or destruction of tangible property (other than the Work itself), including the loss of use resulting therefrom, but only to the extent caused by any negligent act or omission of Contractor, any Subcontractor, any Supplier, or any individual or entity directly or indirectly employed by any of them to perform any of the Work, or anyone for whose acts any of them may be liable.

B. In any and all claims against Owner or Engineer, or any of their officers, directors, members, partners, employees, agents, consultants, or subcontractors, by any employee (or the survivor or personal representative of such employee) of Contractor, any Subcontractor, any Supplier, or any individual or entity directly or indirectly employed by any of them to perform any of the Work, or anyone for whose acts any of them may be liable, the indemnification obligation under Paragraph 7.18.A will not be limited in any way by any limitation on the amount or type of damages, compensation, or benefits payable by or for Contractor or any such Subcontractor, Supplier, or other individual or entity under workers' compensation acts, disability benefit acts, or other employee benefit acts.

7.19 *Delegation of Professional Design Services*

A. Owner may require Contractor to provide professional design services for a portion of the Work by express delegation in the Contract Documents. Such delegation will specify the performance and design criteria that such services must satisfy, and the Submittals that Contractor must furnish to Engineer with respect to the Owner-delegated design.

B. Contractor shall cause such Owner-delegated professional design services to be provided pursuant to the professional standard of care by a properly licensed design professional, whose signature and seal must appear on all drawings, calculations, specifications, certifications, and Submittals prepared by such design professional. Such design professional must issue all certifications of design required by Laws and Regulations.

C. If a Shop Drawing or other Submittal related to the Owner-delegated design is prepared by Contractor, a Subcontractor, or others for submittal to Engineer, then such Shop Drawing or

Copyright© 2018 National Society of Professional Engineers, American Council of Engineering Companies, and American Society of Civil Engineers. All rights reserved.

other Submittal must bear the written approval of Contractor's design professional when submitted by Contractor to Engineer.

D. Owner and Engineer shall be entitled to rely upon the adequacy, accuracy, and completeness of the services, certifications, and approvals performed or provided by the design professionals retained or employed by Contractor under an Owner-delegated design, subject to the professional standard of care and the performance and design criteria stated in the Contract Documents.

E. Pursuant to this Paragraph 7.19, Engineer's review, approval, and other determinations regarding design drawings, calculations, specifications, certifications, and other Submittals furnished by Contractor pursuant to an Owner-delegated design will be only for the following limited purposes:

1. Checking for conformance with the requirements of this Paragraph 7.19;

2. Confirming that Contractor (through its design professionals) has used the performance and design criteria specified in the Contract Documents; and

3. Establishing that the design furnished by Contractor is consistent with the design concept expressed in the Contract Documents.

F. Contractor shall not be responsible for the adequacy of performance or design criteria specified by Owner or Engineer.

G. Contractor is not required to provide professional services in violation of applicable Laws and Regulations.

ARTICLE 8—OTHER WORK AT THE SITE

8.01 *Other Work*

A. In addition to and apart from the Work under the Contract Documents, the Owner may perform other work at or adjacent to the Site. Such other work may be performed by Owner's employees, or through contracts between the Owner and third parties. Owner may also arrange to have third-party utility owners perform work on their utilities and facilities at or adjacent to the Site.

B. If Owner performs other work at or adjacent to the Site with Owner's employees, or through contracts for such other work, then Owner shall give Contractor written notice thereof prior to starting any such other work. If Owner has advance information regarding the start of any third-party utility work that Owner has arranged to take place at or adjacent to the Site, Owner shall provide such information to Contractor.

C. Contractor shall afford proper and safe access to the Site to each contractor that performs such other work, each utility owner performing other work, and Owner, if Owner is performing other work with Owner's employees, and provide a reasonable opportunity for the introduction and storage of materials and equipment and the execution of such other work.

D. Contractor shall do all cutting, fitting, and patching of the Work that may be required to properly connect or otherwise make its several parts come together and properly integrate with such other work. Contractor shall not endanger any work of others by cutting, excavating, or otherwise altering such work; provided, however, that Contractor may cut or

Copyright© 2018 National Society of Professional Engineers, American Council of Engineering Companies, and American Society of Civil Engineers. All rights reserved.

alter others' work with the written consent of Engineer and the others whose work will be affected.

E. If the proper execution or results of any part of Contractor's Work depends upon work performed by others, Contractor shall inspect such other work and promptly report to Engineer in writing any delays, defects, or deficiencies in such other work that render it unavailable or unsuitable for the proper execution and results of Contractor's Work. Contractor's failure to so report will constitute an acceptance of such other work as fit and proper for integration with Contractor's Work except for latent defects and deficiencies in such other work.

F. The provisions of this article are not applicable to work that is performed by third-party utilities or other third-party entities without a contract with Owner, or that is performed without having been arranged by Owner. If such work occurs, then any related delay, disruption, or interference incurred by Contractor is governed by the provisions of Paragraph 4.05.C.3.

8.02 *Coordination*

A. If Owner intends to contract with others for the performance of other work at or adjacent to the Site, to perform other work at or adjacent to the Site with Owner's employees, or to arrange to have utility owners perform work at or adjacent to the Site, the following will be set forth in the Supplementary Conditions or provided to Contractor prior to the start of any such other work:

1. The identity of the individual or entity that will have authority and responsibility for coordination of the activities among the various contractors;

2. An itemization of the specific matters to be covered by such authority and responsibility; and

3. The extent of such authority and responsibilities.

B. Unless otherwise provided in the Supplementary Conditions, Owner shall have sole authority and responsibility for such coordination.

8.03 *Legal Relationships*

A. If, in the course of performing other work for Owner at or adjacent to the Site, the Owner's employees, any other contractor working for Owner, or any utility owner that Owner has arranged to perform work, causes damage to the Work or to the property of Contractor or its Subcontractors, or delays, disrupts, interferes with, or increases the scope or cost of the performance of the Work, through actions or inaction, then Contractor shall be entitled to an equitable adjustment in the Contract Price or the Contract Times. Contractor must submit any Change Proposal seeking an equitable adjustment in the Contract Price or the Contract Times under this paragraph within 30 days of the damaging, delaying, disrupting, or interfering event. The entitlement to, and extent of, any such equitable adjustment will take into account information (if any) regarding such other work that was provided to Contractor in the Contract Documents prior to the submittal of the Bid or the final negotiation of the terms of the Contract, and any remedies available to Contractor under Laws or Regulations concerning utility action or inaction. When applicable, any such equitable adjustment in Contract Price will be conditioned on Contractor assigning to Owner all Contractor's rights against such other contractor or utility owner with respect to the damage, delay, disruption, or interference that

Copyright© 2018 National Society of Professional Engineers, American Council of Engineering Companies, and American Society of Civil Engineers. All rights reserved.

is the subject of the adjustment. Contractor's entitlement to an adjustment of the Contract Times or Contract Price is subject to the provisions of Paragraphs 4.05.D and 4.05.E.

B. Contractor shall take reasonable and customary measures to avoid damaging, delaying, disrupting, or interfering with the work of Owner, any other contractor, or any utility owner performing other work at or adjacent to the Site.

1. If Contractor fails to take such measures and as a result damages, delays, disrupts, or interferes with the work of any such other contractor or utility owner, then Owner may impose a set-off against payments due Contractor, and assign to such other contractor or utility owner the Owner's contractual rights against Contractor with respect to the breach of the obligations set forth in this Paragraph 8.03.B.

2. When Owner is performing other work at or adjacent to the Site with Owner's employees, Contractor shall be liable to Owner for damage to such other work, and for the reasonable direct delay, disruption, and interference costs incurred by Owner as a result of Contractor's failure to take reasonable and customary measures with respect to Owner's other work. In response to such damage, delay, disruption, or interference, Owner may impose a set-off against payments due Contractor.

C. If Contractor damages, delays, disrupts, or interferes with the work of any other contractor, or any utility owner performing other work at or adjacent to the Site, through Contractor's failure to take reasonable and customary measures to avoid such impacts, or if any claim arising out of Contractor's actions, inactions, or negligence in performance of the Work at or adjacent to the Site is made by any such other contractor or utility owner against Contractor, Owner, or Engineer, then Contractor shall (1) promptly attempt to settle the claim as to all parties through negotiations with such other contractor or utility owner, or otherwise resolve the claim by arbitration or other dispute resolution proceeding or at law, and (2) indemnify and hold harmless Owner and Engineer, and the officers, directors, members, partners, employees, agents, consultants and subcontractors of each and any of them from and against any such claims, and against all costs, losses, and damages (including but not limited to all fees and charges of engineers, architects, attorneys, and other professionals and all court or arbitration or other dispute resolution costs) arising out of or relating to such damage, delay, disruption, or interference.

ARTICLE 9—OWNER'S RESPONSIBILITIES

9.01 *Communications to Contractor*

A. Except as otherwise provided in these General Conditions, Owner shall issue all communications to Contractor through Engineer.

9.02 *Replacement of Engineer*

A. Owner may at its discretion appoint an engineer to replace Engineer, provided Contractor makes no reasonable objection to the replacement engineer. The replacement engineer's status under the Contract Documents will be that of the former Engineer.

9.03 *Furnish Data*

A. Owner shall promptly furnish the data required of Owner under the Contract Documents.

Copyright© 2018 National Society of Professional Engineers, American Council of Engineering Companies, and American Society of Civil Engineers. All rights reserved.

9.04 *Pay When Due*

A. Owner shall make payments to Contractor when they are due as provided in the Agreement.

9.05 *Lands and Easements; Reports, Tests, and Drawings*

A. Owner's duties with respect to providing lands and easements are set forth in Paragraph 5.01.

B. Owner's duties with respect to providing engineering surveys to establish reference points are set forth in Paragraph 4.03.

C. Article 5 refers to Owner's identifying and making available to Contractor copies of reports of explorations and tests of conditions at the Site, and drawings of physical conditions relating to existing surface or subsurface structures at the Site.

9.06 *Insurance*

A. Owner's responsibilities, if any, with respect to purchasing and maintaining liability and property insurance are set forth in Article 6.

9.07 *Change Orders*

A. Owner's responsibilities with respect to Change Orders are set forth in Article 11.

9.08 *Inspections, Tests, and Approvals*

A. Owner's responsibility with respect to certain inspections, tests, and approvals is set forth in Paragraph 14.02.B.

9.09 *Limitations on Owner's Responsibilities*

A. The Owner shall not supervise, direct, or have control or authority over, nor be responsible for, Contractor's means, methods, techniques, sequences, or procedures of construction, or the safety precautions and programs incident thereto, or for any failure of Contractor to comply with Laws and Regulations applicable to the performance of the Work. Owner will not be responsible for Contractor's failure to perform the Work in accordance with the Contract Documents.

9.10 *Undisclosed Hazardous Environmental Condition*

A. Owner's responsibility in respect to an undisclosed Hazardous Environmental Condition is set forth in Paragraph 5.06.

9.11 *Evidence of Financial Arrangements*

A. Upon request of Contractor, Owner shall furnish Contractor reasonable evidence that financial arrangements have been made to satisfy Owner's obligations under the Contract (including obligations under proposed changes in the Work).

9.12 *Safety Programs*

A. While at the Site, Owner's employees and representatives shall comply with the specific applicable requirements of Contractor's safety programs of which Owner has been informed.

B. Owner shall furnish copies of any applicable Owner safety programs to Contractor.

Copyright© 2018 National Society of Professional Engineers, American Council of Engineering Companies, and American Society of Civil Engineers. All rights reserved.

ARTICLE 10—ENGINEER'S STATUS DURING CONSTRUCTION

10.01 *Owner's Representative*

A. Engineer will be Owner's representative during the construction period. The duties and responsibilities and the limitations of authority of Engineer as Owner's representative during construction are set forth in the Contract.

10.02 *Visits to Site*

A. Engineer will make visits to the Site at intervals appropriate to the various stages of construction as Engineer deems necessary in order to observe, as an experienced and qualified design professional, the progress that has been made and the quality of the various aspects of Contractor's executed Work. Based on information obtained during such visits and observations, Engineer, for the benefit of Owner, will determine, in general, if the Work is proceeding in accordance with the Contract Documents. Engineer will not be required to make exhaustive or continuous inspections on the Site to check the quality or quantity of the Work. Engineer's efforts will be directed toward providing for Owner a greater degree of confidence that the completed Work will conform generally to the Contract Documents. On the basis of such visits and observations, Engineer will keep Owner informed of the progress of the Work and will endeavor to guard Owner against defective Work.

B. Engineer's visits and observations are subject to all the limitations on Engineer's authority and responsibility set forth in Paragraph 10.07. Particularly, but without limitation, during or as a result of Engineer's visits or observations of Contractor's Work, Engineer will not supervise, direct, control, or have authority over or be responsible for Contractor's means, methods, techniques, sequences, or procedures of construction, or the safety precautions and programs incident thereto, or for any failure of Contractor to comply with Laws and Regulations applicable to the performance of the Work.

10.03 *Resident Project Representative*

A. If Owner and Engineer have agreed that Engineer will furnish a Resident Project Representative to represent Engineer at the Site and assist Engineer in observing the progress and quality of the Work, then the authority and responsibilities of any such Resident Project Representative will be as provided in the Supplementary Conditions, and limitations on the responsibilities thereof will be as provided in the Supplementary Conditions and in Paragraph 10.07.

B. If Owner designates an individual or entity who is not Engineer's consultant, agent, or employee to represent Owner at the Site, then the responsibilities and authority of such individual or entity will be as provided in the Supplementary Conditions.

10.04 *Engineer's Authority*

A. Engineer has the authority to reject Work in accordance with Article 14.

B. Engineer's authority as to Submittals is set forth in Paragraph 7.16.

C. Engineer's authority as to design drawings, calculations, specifications, certifications and other Submittals from Contractor in response to Owner's delegation (if any) to Contractor of professional design services, is set forth in Paragraph 7.19.

D. Engineer's authority as to changes in the Work is set forth in Article 11.

Copyright© 2018 National Society of Professional Engineers, American Council of Engineering Companies, and American Society of Civil Engineers. All rights reserved.

E. Engineer's authority as to Applications for Payment is set forth in Article 15.

10.05 *Determinations for Unit Price Work*

A. Engineer will determine the actual quantities and classifications of Unit Price Work performed by Contractor as set forth in Paragraph 13.03.

10.06 *Decisions on Requirements of Contract Documents and Acceptability of Work*

A. Engineer will render decisions regarding the requirements of the Contract Documents, and judge the acceptability of the Work, pursuant to the specific procedures set forth herein for initial interpretations, Change Proposals, and acceptance of the Work. In rendering such decisions and judgments, Engineer will not show partiality to Owner or Contractor, and will not be liable to Owner, Contractor, or others in connection with any proceedings, interpretations, decisions, or judgments conducted or rendered in good faith.

10.07 *Limitations on Engineer's Authority and Responsibilities*

A. Neither Engineer's authority or responsibility under this Article 10 or under any other provision of the Contract, nor any decision made by Engineer in good faith either to exercise or not exercise such authority or responsibility or the undertaking, exercise, or performance of any authority or responsibility by Engineer, will create, impose, or give rise to any duty in contract, tort, or otherwise owed by Engineer to Contractor, any Subcontractor, any Supplier, any other individual or entity, or to any surety for or employee or agent of any of them.

B. Engineer will not supervise, direct, control, or have authority over or be responsible for Contractor's means, methods, techniques, sequences, or procedures of construction, or the safety precautions and programs incident thereto, or for any failure of Contractor to comply with Laws and Regulations applicable to the performance of the Work. Engineer will not be responsible for Contractor's failure to perform the Work in accordance with the Contract Documents.

C. Engineer will not be responsible for the acts or omissions of Contractor or of any Subcontractor, any Supplier, or of any other individual or entity performing any of the Work.

D. Engineer's review of the final Application for Payment and accompanying documentation, and all maintenance and operating instructions, schedules, guarantees, bonds, certificates of inspection, tests and approvals, and other documentation required to be delivered by Contractor under Paragraph 15.06.A, will only be to determine generally that their content complies with the requirements of, and in the case of certificates of inspections, tests, and approvals, that the results certified indicate compliance with the Contract Documents.

E. The limitations upon authority and responsibility set forth in this Paragraph 10.07 also apply to the Resident Project Representative, if any.

10.08 *Compliance with Safety Program*

A. While at the Site, Engineer's employees and representatives will comply with the specific applicable requirements of Owner's and Contractor's safety programs of which Engineer has been informed.

Copyright© 2018 National Society of Professional Engineers, American Council of Engineering Companies, and American Society of Civil Engineers. All rights reserved.

ARTICLE 11—CHANGES TO THE CONTRACT

11.01 *Amending and Supplementing the Contract*

A. The Contract may be amended or supplemented by a Change Order, a Work Change Directive, or a Field Order.

B. If an amendment or supplement to the Contract includes a change in the Contract Price or the Contract Times, such amendment or supplement must be set forth in a Change Order.

C. All changes to the Contract that involve (1) the performance or acceptability of the Work, (2) the design (as set forth in the Drawings, Specifications, or otherwise), or (3) other engineering or technical matters, must be supported by Engineer's recommendation. Owner and Contractor may amend other terms and conditions of the Contract without the recommendation of the Engineer.

11.02 *Change Orders*

A. Owner and Contractor shall execute appropriate Change Orders covering:

1. Changes in Contract Price or Contract Times which are agreed to by the parties, including any undisputed sum or amount of time for Work actually performed in accordance with a Work Change Directive;

2. Changes in Contract Price resulting from an Owner set-off, unless Contractor has duly contested such set-off;

3. Changes in the Work which are: (a) ordered by Owner pursuant to Paragraph 11.05, (b) required because of Owner's acceptance of defective Work under Paragraph 14.04 or Owner's correction of defective Work under Paragraph 14.07, or (c) agreed to by the parties, subject to the need for Engineer's recommendation if the change in the Work involves the design (as set forth in the Drawings, Specifications, or otherwise) or other engineering or technical matters; and

4. Changes that embody the substance of any final and binding results under: Paragraph 11.03.B, resolving the impact of a Work Change Directive; Paragraph 11.09, concerning Change Proposals; Article 12, Claims; Paragraph 13.02.D, final adjustments resulting from allowances; Paragraph 13.03.D, final adjustments relating to determination of quantities for Unit Price Work; and similar provisions.

B. If Owner or Contractor refuses to execute a Change Order that is required to be executed under the terms of Paragraph 11.02.A, it will be deemed to be of full force and effect, as if fully executed.

11.03 *Work Change Directives*

A. A Work Change Directive will not change the Contract Price or the Contract Times but is evidence that the parties expect that the modification ordered or documented by a Work Change Directive will be incorporated in a subsequently issued Change Order, following negotiations by the parties as to the Work Change Directive's effect, if any, on the Contract Price and Contract Times; or, if negotiations are unsuccessful, by a determination under the terms of the Contract Documents governing adjustments, expressly including Paragraph 11.07 regarding change of Contract Price.

Copyright© 2018 National Society of Professional Engineers, American Council of Engineering Companies, and American Society of Civil Engineers. All rights reserved.

B. If Owner has issued a Work Change Directive and:

1. Contractor believes that an adjustment in Contract Times or Contract Price is necessary, then Contractor shall submit any Change Proposal seeking such an adjustment no later than 30 days after the completion of the Work set out in the Work Change Directive.

2. Owner believes that an adjustment in Contract Times or Contract Price is necessary, then Owner shall submit any Claim seeking such an adjustment no later than 60 days after issuance of the Work Change Directive.

11.04 *Field Orders*

A. Engineer may authorize minor changes in the Work if the changes do not involve an adjustment in the Contract Price or the Contract Times and are compatible with the design concept of the completed Project as a functioning whole as indicated by the Contract Documents. Such changes will be accomplished by a Field Order and will be binding on Owner and also on Contractor, which shall perform the Work involved promptly.

B. If Contractor believes that a Field Order justifies an adjustment in the Contract Price or Contract Times, then before proceeding with the Work at issue, Contractor shall submit a Change Proposal as provided herein.

11.05 *Owner-Authorized Changes in the Work*

A. Without invalidating the Contract and without notice to any surety, Owner may, at any time or from time to time, order additions, deletions, or revisions in the Work. Changes involving the design (as set forth in the Drawings, Specifications, or otherwise) or other engineering or technical matters will be supported by Engineer's recommendation.

B. Such changes in the Work may be accomplished by a Change Order, if Owner and Contractor have agreed as to the effect, if any, of the changes on Contract Times or Contract Price; or by a Work Change Directive. Upon receipt of any such document, Contractor shall promptly proceed with the Work involved; or, in the case of a deletion in the Work, promptly cease construction activities with respect to such deleted Work. Added or revised Work must be performed under the applicable conditions of the Contract Documents.

C. Nothing in this Paragraph 11.05 obligates Contractor to undertake work that Contractor reasonably concludes cannot be performed in a manner consistent with Contractor's safety obligations under the Contract Documents or Laws and Regulations.

11.06 *Unauthorized Changes in the Work*

A. Contractor shall not be entitled to an increase in the Contract Price or an extension of the Contract Times with respect to any work performed that is not required by the Contract Documents, as amended, modified, or supplemented, except in the case of an emergency as provided in Paragraph 7.15 or in the case of uncovering Work as provided in Paragraph 14.05.C.2.

11.07 *Change of Contract Price*

A. The Contract Price may only be changed by a Change Order. Any Change Proposal for an adjustment in the Contract Price must comply with the provisions of Paragraph 11.09. Any Claim for an adjustment of Contract Price must comply with the provisions of Article 12.

B. An adjustment in the Contract Price will be determined as follows:

Copyright© 2018 National Society of Professional Engineers, American Council of Engineering Companies, and American Society of Civil Engineers. All rights reserved.

1. Where the Work involved is covered by unit prices contained in the Contract Documents, then by application of such unit prices to the quantities of the items involved (subject to the provisions of Paragraph 13.03);

2. Where the Work involved is not covered by unit prices contained in the Contract Documents, then by a mutually agreed lump sum (which may include an allowance for overhead and profit not necessarily in accordance with Paragraph 11.07.C.2); or

3. Where the Work involved is not covered by unit prices contained in the Contract Documents and the parties do not reach mutual agreement to a lump sum, then on the basis of the Cost of the Work (determined as provided in Paragraph 13.01) plus a Contractor's fee for overhead and profit (determined as provided in Paragraph 11.07.C).

C. *Contractor's Fee*: When applicable, the Contractor's fee for overhead and profit will be determined as follows:

1. A mutually acceptable fixed fee; or

2. If a fixed fee is not agreed upon, then a fee based on the following percentages of the various portions of the Cost of the Work:

a. For costs incurred under Paragraphs 13.01.B.1 and 13.01.B.2, the Contractor's fee will be 15 percent;

b. For costs incurred under Paragraph 13.01.B.3, the Contractor's fee will be 5 percent;

c. Where one or more tiers of subcontracts are on the basis of Cost of the Work plus a fee and no fixed fee is agreed upon, the intent of Paragraphs 11.07.C.2.a and 11.07.C.2.b is that the Contractor's fee will be based on: (1) a fee of 15 percent of the costs incurred under Paragraphs 13.01.B.1 and 13.01.B.2 by the Subcontractor that actually performs the Work, at whatever tier, and (2) with respect to Contractor itself and to any Subcontractors of a tier higher than that of the Subcontractor that actually performs the Work, a fee of 5 percent of the amount (fee plus underlying costs incurred) attributable to the next lower tier Subcontractor; provided, however, that for any such subcontracted Work the maximum total fee to be paid by Owner will be no greater than 27 percent of the costs incurred by the Subcontractor that actually performs the Work;

d. No fee will be payable on the basis of costs itemized under Paragraphs 13.01.B.4, 13.01.B.5, and 13.01.C;

e. The amount of credit to be allowed by Contractor to Owner for any change which results in a net decrease in Cost of the Work will be the amount of the actual net decrease in Cost of the Work and a deduction of an additional amount equal to 5 percent of such actual net decrease in Cost of the Work; and

f. When both additions and credits are involved in any one change or Change Proposal, the adjustment in Contractor's fee will be computed by determining the sum of the costs in each of the cost categories in Paragraph 13.01.B (specifically, payroll costs, Paragraph 13.01.B.1; incorporated materials and equipment costs, Paragraph 13.01.B.2; Subcontract costs, Paragraph 13.01.B.3; special consultants costs, Paragraph 13.01.B.4; and other costs, Paragraph 13.01.B.5) and applying to each such cost category sum the appropriate fee from Paragraphs 11.07.C.2.a through 11.07.C.2.e, inclusive.

Copyright© 2018 National Society of Professional Engineers, American Council of Engineering Companies, and American Society of Civil Engineers. All rights reserved.

11.08 *Change of Contract Times*

A. The Contract Times may only be changed by a Change Order. Any Change Proposal for an adjustment in the Contract Times must comply with the provisions of Paragraph 11.09. Any Claim for an adjustment in the Contract Times must comply with the provisions of Article 12.

B. Delay, disruption, and interference in the Work, and any related changes in Contract Times, are addressed in and governed by Paragraph 4.05.

11.09 *Change Proposals*

A. *Purpose and Content*: Contractor shall submit a Change Proposal to Engineer to request an adjustment in the Contract Times or Contract Price; contest an initial decision by Engineer concerning the requirements of the Contract Documents or relating to the acceptability of the Work under the Contract Documents; challenge a set-off against payment due; or seek other relief under the Contract. The Change Proposal will specify any proposed change in Contract Times or Contract Price, or other proposed relief, and explain the reason for the proposed change, with citations to any governing or applicable provisions of the Contract Documents. Each Change Proposal will address only one issue, or a set of closely related issues.

B. *Change Proposal Procedures*

1. *Submittal*: Contractor shall submit each Change Proposal to Engineer within 30 days after the start of the event giving rise thereto, or after such initial decision.

2. *Supporting Data*: The Contractor shall submit supporting data, including the proposed change in Contract Price or Contract Time (if any), to the Engineer and Owner within 15 days after the submittal of the Change Proposal.

    a. Change Proposals based on or related to delay, interruption, or interference must comply with the provisions of Paragraphs 4.05.D and 4.05.E.

    b. Change proposals related to a change of Contract Price must include full and detailed accounts of materials incorporated into the Work and labor and equipment used for the subject Work.

    The supporting data must be accompanied by a written statement that the supporting data are accurate and complete, and that any requested time or price adjustment is the entire adjustment to which Contractor believes it is entitled as a result of said event.

3. *Engineer's Initial Review*: Engineer will advise Owner regarding the Change Proposal, and consider any comments or response from Owner regarding the Change Proposal. If in its discretion Engineer concludes that additional supporting data is needed before conducting a full review and making a decision regarding the Change Proposal, then Engineer may request that Contractor submit such additional supporting data by a date specified by Engineer, prior to Engineer beginning its full review of the Change Proposal.

4. *Engineer's Full Review and Action on the Change Proposal*: Upon receipt of Contractor's supporting data (including any additional data requested by Engineer), Engineer will conduct a full review of each Change Proposal and, within 30 days after such receipt of the Contractor's supporting data, either approve the Change Proposal in whole, deny it in whole, or approve it in part and deny it in part. Such actions must be in writing, with a copy provided to Owner and Contractor. If Engineer does not take action on the Change

Copyright© 2018 National Society of Professional Engineers, American Council of Engineering Companies, and American Society of Civil Engineers. All rights reserved.

Proposal within 30 days, then either Owner or Contractor may at any time thereafter submit a letter to the other party indicating that as a result of Engineer's inaction the Change Proposal is deemed denied, thereby commencing the time for appeal of the denial under Article 12.

5. *Binding Decision*: Engineer's decision is final and binding upon Owner and Contractor, unless Owner or Contractor appeals the decision by filing a Claim under Article 12.

C. *Resolution of Certain Change Proposals*: If the Change Proposal does not involve the design (as set forth in the Drawings, Specifications, or otherwise), the acceptability of the Work, or other engineering or technical matters, then Engineer will notify the parties in writing that the Engineer is unable to resolve the Change Proposal. For purposes of further resolution of such a Change Proposal, such notice will be deemed a denial, and Contractor may choose to seek resolution under the terms of Article 12.

D. *Post-Completion*: Contractor shall not submit any Change Proposals after Engineer issues a written recommendation of final payment pursuant to Paragraph 15.06.B.

11.10 *Notification to Surety*

A. If the provisions of any bond require notice to be given to a surety of any change affecting the general scope of the Work or the provisions of the Contract Documents (including, but not limited to, Contract Price or Contract Times), the giving of any such notice will be Contractor's responsibility. The amount of each applicable bond will be adjusted to reflect the effect of any such change.

ARTICLE 12—CLAIMS

12.01 *Claims*

A. *Claims Process*: The following disputes between Owner and Contractor are subject to the Claims process set forth in this article:

1. Appeals by Owner or Contractor of Engineer's decisions regarding Change Proposals;

2. Owner demands for adjustments in the Contract Price or Contract Times, or other relief under the Contract Documents;

3. Disputes that Engineer has been unable to address because they do not involve the design (as set forth in the Drawings, Specifications, or otherwise), the acceptability of the Work, or other engineering or technical matters; and

4. Subject to the waiver provisions of Paragraph 15.07, any dispute arising after Engineer has issued a written recommendation of final payment pursuant to Paragraph 15.06.B.

B. *Submittal of Claim*: The party submitting a Claim shall deliver it directly to the other party to the Contract promptly (but in no event later than 30 days) after the start of the event giving rise thereto; in the case of appeals regarding Change Proposals within 30 days of the decision under appeal. The party submitting the Claim shall also furnish a copy to the Engineer, for its information only. The responsibility to substantiate a Claim rests with the party making the Claim. In the case of a Claim by Contractor seeking an increase in the Contract Times or Contract Price, Contractor shall certify that the Claim is made in good faith, that the supporting data are accurate and complete, and that to the best of Contractor's knowledge

Copyright© 2018 National Society of Professional Engineers, American Council of Engineering Companies, and American Society of Civil Engineers. All rights reserved.

and belief the amount of time or money requested accurately reflects the full amount to which Contractor is entitled.

C. *Review and Resolution*: The party receiving a Claim shall review it thoroughly, giving full consideration to its merits. The two parties shall seek to resolve the Claim through the exchange of information and direct negotiations. The parties may extend the time for resolving the Claim by mutual agreement. All actions taken on a Claim will be stated in writing and submitted to the other party, with a copy to Engineer.

D. *Mediation*

1. At any time after initiation of a Claim, Owner and Contractor may mutually agree to mediation of the underlying dispute. The agreement to mediate will stay the Claim submittal and response process.

2. If Owner and Contractor agree to mediation, then after 60 days from such agreement, either Owner or Contractor may unilaterally terminate the mediation process, and the Claim submittal and decision process will resume as of the date of the termination. If the mediation proceeds but is unsuccessful in resolving the dispute, the Claim submittal and decision process will resume as of the date of the conclusion of the mediation, as determined by the mediator.

3. Owner and Contractor shall each pay one-half of the mediator's fees and costs.

E. *Partial Approval*: If the party receiving a Claim approves the Claim in part and denies it in part, such action will be final and binding unless within 30 days of such action the other party invokes the procedure set forth in Article 17 for final resolution of disputes.

F. *Denial of Claim*: If efforts to resolve a Claim are not successful, the party receiving the Claim may deny it by giving written notice of denial to the other party. If the receiving party does not take action on the Claim within 90 days, then either Owner or Contractor may at any time thereafter submit a letter to the other party indicating that as a result of the inaction, the Claim is deemed denied, thereby commencing the time for appeal of the denial. A denial of the Claim will be final and binding unless within 30 days of the denial the other party invokes the procedure set forth in Article 17 for the final resolution of disputes.

G. *Final and Binding Results*: If the parties reach a mutual agreement regarding a Claim, whether through approval of the Claim, direct negotiations, mediation, or otherwise; or if a Claim is approved in part and denied in part, or denied in full, and such actions become final and binding; then the results of the agreement or action on the Claim will be incorporated in a Change Order or other written document to the extent they affect the Contract, including the Work, the Contract Times, or the Contract Price.

ARTICLE 13—COST OF THE WORK; ALLOWANCES; UNIT PRICE WORK

13.01 *Cost of the Work*

A. *Purposes for Determination of Cost of the Work*: The term Cost of the Work means the sum of all costs necessary for the proper performance of the Work at issue, as further defined below. The provisions of this Paragraph 13.01 are used for two distinct purposes:

1. To determine Cost of the Work when Cost of the Work is a component of the Contract Price, under cost-plus-fee, time-and-materials, or other cost-based terms; or

Copyright© 2018 National Society of Professional Engineers, American Council of Engineering Companies, and American Society of Civil Engineers. All rights reserved.

2. When needed to determine the value of a Change Order, Change Proposal, Claim, set-off, or other adjustment in Contract Price. When the value of any such adjustment is determined on the basis of Cost of the Work, Contractor is entitled only to those additional or incremental costs required because of the change in the Work or because of the event giving rise to the adjustment.

B. *Costs Included*: Except as otherwise may be agreed to in writing by Owner, costs included in the Cost of the Work will be in amounts no higher than those commonly incurred in the locality of the Project, will not include any of the costs itemized in Paragraph 13.01.C, and will include only the following items:

1. Payroll costs for employees in the direct employ of Contractor in the performance of the Work under schedules of job classifications agreed upon by Owner and Contractor in advance of the subject Work. Such employees include, without limitation, superintendents, foremen, safety managers, safety representatives, and other personnel employed full time on the Work. Payroll costs for employees not employed full time on the Work will be apportioned on the basis of their time spent on the Work. Payroll costs include, but are not limited to, salaries and wages plus the cost of fringe benefits, which include social security contributions, unemployment, excise, and payroll taxes, workers' compensation, health and retirement benefits, sick leave, and vacation and holiday pay applicable thereto. The expenses of performing Work outside of regular working hours, on Saturday, Sunday, or legal holidays, will be included in the above to the extent authorized by Owner.

2. Cost of all materials and equipment furnished and incorporated in the Work, including costs of transportation and storage thereof, and Suppliers' field services required in connection therewith. All cash discounts accrue to Contractor unless Owner deposits funds with Contractor with which to make payments, in which case the cash discounts will accrue to Owner. All trade discounts, rebates, and refunds and returns from sale of surplus materials and equipment will accrue to Owner, and Contractor shall make provisions so that they may be obtained.

3. Payments made by Contractor to Subcontractors for Work performed by Subcontractors. If required by Owner, Contractor shall obtain competitive bids from subcontractors acceptable to Owner and Contractor and shall deliver such bids to Owner, which will then determine, with the advice of Engineer, which bids, if any, will be acceptable. If any subcontract provides that the Subcontractor is to be paid on the basis of Cost of the Work plus a fee, the Subcontractor's Cost of the Work and fee will be determined in the same manner as Contractor's Cost of the Work and fee as provided in this Paragraph 13.01.

4. Costs of special consultants (including but not limited to engineers, architects, testing laboratories, surveyors, attorneys, and accountants) employed or retained for services specifically related to the Work.

5. Other costs consisting of the following:

a. The proportion of necessary transportation, travel, and subsistence expenses of Contractor's employees incurred in discharge of duties connected with the Work.

b. Cost, including transportation and maintenance, of all materials, supplies, equipment, machinery, appliances, office, and temporary facilities at the Site, which are

Copyright© 2018 National Society of Professional Engineers, American Council of Engineering Companies, and American Society of Civil Engineers. All rights reserved.

consumed in the performance of the Work, and cost, less market value, of such items used but not consumed which remain the property of Contractor.

1) In establishing included costs for materials such as scaffolding, plating, or sheeting, consideration will be given to the actual or the estimated life of the material for use on other projects; or rental rates may be established on the basis of purchase or salvage value of such items, whichever is less. Contractor will not be eligible for compensation for such items in an amount that exceeds the purchase cost of such item.

c. *Construction Equipment Rental*

1) Rentals of all construction equipment and machinery, and the parts thereof, in accordance with rental agreements approved by Owner as to price (including any surcharge or special rates applicable to overtime use of the construction equipment or machinery), and the costs of transportation, loading, unloading, assembly, dismantling, and removal thereof. All such costs will be in accordance with the terms of said rental agreements. The rental of any such equipment, machinery, or parts must cease when the use thereof is no longer necessary for the Work.

2) Costs for equipment and machinery owned by Contractor or a Contractor-related entity will be paid at a rate shown for such equipment in the equipment rental rate book specified in the Supplementary Conditions. An hourly rate will be computed by dividing the monthly rates by 176. These computed rates will include all operating costs.

3) With respect to Work that is the result of a Change Order, Change Proposal, Claim, set-off, or other adjustment in Contract Price ("changed Work"), included costs will be based on the time the equipment or machinery is in use on the changed Work and the costs of transportation, loading, unloading, assembly, dismantling, and removal when directly attributable to the changed Work. The cost of any such equipment or machinery, or parts thereof, must cease to accrue when the use thereof is no longer necessary for the changed Work.

d. Sales, consumer, use, and other similar taxes related to the Work, and for which Contractor is liable, as imposed by Laws and Regulations.

e. Deposits lost for causes other than negligence of Contractor, any Subcontractor, or anyone directly or indirectly employed by any of them or for whose acts any of them may be liable, and royalty payments and fees for permits and licenses.

f. Losses and damages (and related expenses) caused by damage to the Work, not compensated by insurance or otherwise, sustained by Contractor in connection with the performance of the Work (except losses and damages within the deductible amounts of builder's risk or other property insurance established in accordance with Paragraph 6.04), provided such losses and damages have resulted from causes other than the negligence of Contractor, any Subcontractor, or anyone directly or indirectly employed by any of them or for whose acts any of them may be liable. Such losses include settlements made with the written consent and approval of Owner. No such losses, damages, and expenses will be included in the Cost of the Work for the purpose of determining Contractor's fee.

Copyright© 2018 National Society of Professional Engineers, American Council of Engineering Companies, and American Society of Civil Engineers. All rights reserved.

g. The cost of utilities, fuel, and sanitary facilities at the Site.

h. Minor expenses such as communication service at the Site, express and courier services, and similar petty cash items in connection with the Work.

i. The costs of premiums for all bonds and insurance that Contractor is required by the Contract Documents to purchase and maintain.

C. *Costs Excluded*: The term Cost of the Work does not include any of the following items:

1. Payroll costs and other compensation of Contractor's officers, executives, principals, general managers, engineers, architects, estimators, attorneys, auditors, accountants, purchasing and contracting agents, expediters, timekeepers, clerks, and other personnel employed by Contractor, whether at the Site or in Contractor's principal or branch office for general administration of the Work and not specifically included in the agreed upon schedule of job classifications referred to in Paragraph 13.01.B.1 or specifically covered by Paragraph 13.01.B.4. The payroll costs and other compensation excluded here are to be considered administrative costs covered by the Contractor's fee.

2. The cost of purchasing, renting, or furnishing small tools and hand tools.

3. Expenses of Contractor's principal and branch offices other than Contractor's office at the Site.

4. Any part of Contractor's capital expenses, including interest on Contractor's capital employed for the Work and charges against Contractor for delinquent payments.

5. Costs due to the negligence of Contractor, any Subcontractor, or anyone directly or indirectly employed by any of them or for whose acts any of them may be liable, including but not limited to, the correction of defective Work, disposal of materials or equipment wrongly supplied, and making good any damage to property.

6. Expenses incurred in preparing and advancing Claims.

7. Other overhead or general expense costs of any kind and the costs of any item not specifically and expressly included in Paragraph 13.01.B.

D. *Contractor's Fee*

1. When the Work as a whole is performed on the basis of cost-plus-a-fee, then:

a. Contractor's fee for the Work set forth in the Contract Documents as of the Effective Date of the Contract will be determined as set forth in the Agreement.

b. for any Work covered by a Change Order, Change Proposal, Claim, set-off, or other adjustment in Contract Price on the basis of Cost of the Work, Contractor's fee will be determined as follows:

1) When the fee for the Work as a whole is a percentage of the Cost of the Work, the fee will automatically adjust as the Cost of the Work changes.

2) When the fee for the Work as a whole is a fixed fee, the fee for any additions or deletions will be determined in accordance with Paragraph 11.07.C.2.

2. When the Work as a whole is performed on the basis of a stipulated sum, or any other basis other than cost-plus-a-fee, then Contractor's fee for any Work covered by a Change

Copyright© 2018 National Society of Professional Engineers, American Council of Engineering Companies, and American Society of Civil Engineers. All rights reserved.

Order, Change Proposal, Claim, set-off, or other adjustment in Contract Price on the basis of Cost of the Work will be determined in accordance with Paragraph 11.07.C.2.

E. *Documentation and Audit*: Whenever the Cost of the Work for any purpose is to be determined pursuant to this Article 13, Contractor and pertinent Subcontractors will establish and maintain records of the costs in accordance with generally accepted accounting practices. Subject to prior written notice, Owner will be afforded reasonable access, during normal business hours, to all Contractor's accounts, records, books, correspondence, instructions, drawings, receipts, vouchers, memoranda, and similar data relating to the Cost of the Work and Contractor's fee. Contractor shall preserve all such documents for a period of three years after the final payment by Owner. Pertinent Subcontractors will afford such access to Owner, and preserve such documents, to the same extent required of Contractor.

13.02 *Allowances*

A. It is understood that Contractor has included in the Contract Price all allowances so named in the Contract Documents and shall cause the Work so covered to be performed for such sums and by such persons or entities as may be acceptable to Owner and Engineer.

B. *Cash Allowances*: Contractor agrees that:

1. the cash allowances include the cost to Contractor (less any applicable trade discounts) of materials and equipment required by the allowances to be delivered at the Site, and all applicable taxes; and

2. Contractor's costs for unloading and handling on the Site, labor, installation, overhead, profit, and other expenses contemplated for the cash allowances have been included in the Contract Price and not in the allowances, and no demand for additional payment for any of the foregoing will be valid.

C. *Owner's Contingency Allowance*: Contractor agrees that an Owner's contingency allowance, if any, is for the sole use of Owner to cover unanticipated costs.

D. Prior to final payment, an appropriate Change Order will be issued as recommended by Engineer to reflect actual amounts due Contractor for Work covered by allowances, and the Contract Price will be correspondingly adjusted.

13.03 *Unit Price Work*

A. Where the Contract Documents provide that all or part of the Work is to be Unit Price Work, initially the Contract Price will be deemed to include for all Unit Price Work an amount equal to the sum of the unit price for each separately identified item of Unit Price Work times the estimated quantity of each item as indicated in the Agreement.

B. The estimated quantities of items of Unit Price Work are not guaranteed and are solely for the purpose of comparison of Bids and determining an initial Contract Price. Payments to Contractor for Unit Price Work will be based on actual quantities.

C. Each unit price will be deemed to include an amount considered by Contractor to be adequate to cover Contractor's overhead and profit for each separately identified item.

D. Engineer will determine the actual quantities and classifications of Unit Price Work performed by Contractor. Engineer will review with Contractor the Engineer's preliminary determinations on such matters before rendering a written decision thereon (by recommendation of an Application for Payment or otherwise). Engineer's written decision

Copyright© 2018 National Society of Professional Engineers, American Council of Engineering Companies, and American Society of Civil Engineers. All rights reserved.

thereon will be final and binding (except as modified by Engineer to reflect changed factual conditions or more accurate data) upon Owner and Contractor, and the final adjustment of Contract Price will be set forth in a Change Order, subject to the provisions of the following paragraph.

E. *Adjustments in Unit Price*

1. Contractor or Owner shall be entitled to an adjustment in the unit price with respect to an item of Unit Price Work if:

a. the quantity of the item of Unit Price Work performed by Contractor differs materially and significantly from the estimated quantity of such item indicated in the Agreement; and

b. Contractor's unit costs to perform the item of Unit Price Work have changed materially and significantly as a result of the quantity change.

2. The adjustment in unit price will account for and be coordinated with any related changes in quantities of other items of Work, and in Contractor's costs to perform such other Work, such that the resulting overall change in Contract Price is equitable to Owner and Contractor.

3. Adjusted unit prices will apply to all units of that item.

ARTICLE 14—TESTS AND INSPECTIONS; CORRECTION, REMOVAL, OR ACCEPTANCE OF DEFECTIVE WORK

14.01 *Access to Work*

A. Owner, Engineer, their consultants and other representatives and personnel of Owner, independent testing laboratories, and authorities having jurisdiction have access to the Site and the Work at reasonable times for their observation, inspection, and testing. Contractor shall provide them proper and safe conditions for such access and advise them of Contractor's safety procedures and programs so that they may comply with such procedures and programs as applicable.

14.02 *Tests, Inspections, and Approvals*

A. Contractor shall give Engineer timely notice of readiness of the Work (or specific parts thereof) for all required inspections and tests, and shall cooperate with inspection and testing personnel to facilitate required inspections and tests.

B. Owner shall retain and pay for the services of an independent inspector, testing laboratory, or other qualified individual or entity to perform all inspections and tests expressly required by the Contract Documents to be furnished and paid for by Owner, except that costs incurred in connection with tests or inspections of covered Work will be governed by the provisions of Paragraph 14.05.

C. If Laws or Regulations of any public body having jurisdiction require any Work (or part thereof) specifically to be inspected, tested, or approved by an employee or other representative of such public body, Contractor shall assume full responsibility for arranging and obtaining such inspections, tests, or approvals, pay all costs in connection therewith, and furnish Engineer the required certificates of inspection or approval.

Copyright© 2018 National Society of Professional Engineers, American Council of Engineering Companies, and American Society of Civil Engineers. All rights reserved.

D. Contractor shall be responsible for arranging, obtaining, and paying for all inspections and tests required:

1. by the Contract Documents, unless the Contract Documents expressly allocate responsibility for a specific inspection or test to Owner;

2. to attain Owner's and Engineer's acceptance of materials or equipment to be incorporated in the Work;

3. by manufacturers of equipment furnished under the Contract Documents;

4. for testing, adjusting, and balancing of mechanical, electrical, and other equipment to be incorporated into the Work; and

5. for acceptance of materials, mix designs, or equipment submitted for approval prior to Contractor's purchase thereof for incorporation in the Work.

Such inspections and tests will be performed by independent inspectors, testing laboratories, or other qualified individuals or entities acceptable to Owner and Engineer.

E. If the Contract Documents require the Work (or part thereof) to be approved by Owner, Engineer, or another designated individual or entity, then Contractor shall assume full responsibility for arranging and obtaining such approvals.

F. If any Work (or the work of others) that is to be inspected, tested, or approved is covered by Contractor without written concurrence of Engineer, Contractor shall, if requested by Engineer, uncover such Work for observation. Such uncovering will be at Contractor's expense unless Contractor had given Engineer timely notice of Contractor's intention to cover the same and Engineer had not acted with reasonable promptness in response to such notice.

14.03 *Defective Work*

A. *Contractor's Obligation*: It is Contractor's obligation to assure that the Work is not defective.

B. *Engineer's Authority*: Engineer has the authority to determine whether Work is defective, and to reject defective Work.

C. *Notice of Defects*: Prompt written notice of all defective Work of which Owner or Engineer has actual knowledge will be given to Contractor.

D. *Correction, or Removal and Replacement*: Promptly after receipt of written notice of defective Work, Contractor shall correct all such defective Work, whether or not fabricated, installed, or completed, or, if Engineer has rejected the defective Work, remove it from the Project and replace it with Work that is not defective.

E. *Preservation of Warranties*: When correcting defective Work, Contractor shall take no action that would void or otherwise impair Owner's special warranty and guarantee, if any, on said Work.

F. *Costs and Damages*: In addition to its correction, removal, and replacement obligations with respect to defective Work, Contractor shall pay all claims, costs, losses, and damages arising out of or relating to defective Work, including but not limited to the cost of the inspection, testing, correction, removal, replacement, or reconstruction of such defective Work, fines levied against Owner by governmental authorities because the Work is defective, and the costs of repair or replacement of work of others resulting from defective Work. Prior to final payment, if Owner and Contractor are unable to agree as to the measure of such claims, costs,

Copyright© 2018 National Society of Professional Engineers, American Council of Engineering Companies, and American Society of Civil Engineers. All rights reserved.

losses, and damages resulting from defective Work, then Owner may impose a reasonable set-off against payments due under Article 15.

14.04 *Acceptance of Defective Work*

A. If, instead of requiring correction or removal and replacement of defective Work, Owner prefers to accept it, Owner may do so (subject, if such acceptance occurs prior to final payment, to Engineer's confirmation that such acceptance is in general accord with the design intent and applicable engineering principles, and will not endanger public safety). Contractor shall pay all claims, costs, losses, and damages attributable to Owner's evaluation of and determination to accept such defective Work (such costs to be approved by Engineer as to reasonableness), and for the diminished value of the Work to the extent not otherwise paid by Contractor. If any such acceptance occurs prior to final payment, the necessary revisions in the Contract Documents with respect to the Work will be incorporated in a Change Order. If the parties are unable to agree as to the decrease in the Contract Price, reflecting the diminished value of Work so accepted, then Owner may impose a reasonable set-off against payments due under Article 15. If the acceptance of defective Work occurs after final payment, Contractor shall pay an appropriate amount to Owner.

14.05 *Uncovering Work*

A. Engineer has the authority to require additional inspection or testing of the Work, whether or not the Work is fabricated, installed, or completed.

B. If any Work is covered contrary to the written request of Engineer, then Contractor shall, if requested by Engineer, uncover such Work for Engineer's observation, and then replace the covering, all at Contractor's expense.

C. If Engineer considers it necessary or advisable that covered Work be observed by Engineer or inspected or tested by others, then Contractor, at Engineer's request, shall uncover, expose, or otherwise make available for observation, inspection, or testing as Engineer may require, that portion of the Work in question, and provide all necessary labor, material, and equipment.

1. If it is found that the uncovered Work is defective, Contractor shall be responsible for all claims, costs, losses, and damages arising out of or relating to such uncovering, exposure, observation, inspection, and testing, and of satisfactory replacement or reconstruction (including but not limited to all costs of repair or replacement of work of others); and pending Contractor's full discharge of this responsibility the Owner shall be entitled to impose a reasonable set-off against payments due under Article 15.

2. If the uncovered Work is not found to be defective, Contractor shall be allowed an increase in the Contract Price or an extension of the Contract Times, directly attributable to such uncovering, exposure, observation, inspection, testing, replacement, and reconstruction. If the parties are unable to agree as to the amount or extent thereof, then Contractor may submit a Change Proposal within 30 days of the determination that the Work is not defective.

14.06 *Owner May Stop the Work*

A. If the Work is defective, or Contractor fails to supply sufficient skilled workers or suitable materials or equipment, or fails to perform the Work in such a way that the completed Work will conform to the Contract Documents, then Owner may order Contractor to stop the Work,

Copyright© 2018 National Society of Professional Engineers, American Council of Engineering Companies, and American Society of Civil Engineers. All rights reserved.

or any portion thereof, until the cause for such order has been eliminated; however, this right of Owner to stop the Work will not give rise to any duty on the part of Owner to exercise this right for the benefit of Contractor, any Subcontractor, any Supplier, any other individual or entity, or any surety for, or employee or agent of any of them.

14.07 *Owner May Correct Defective Work*

A. If Contractor fails within a reasonable time after written notice from Engineer to correct defective Work, or to remove and replace defective Work as required by Engineer, then Owner may, after 7 days' written notice to Contractor, correct or remedy any such deficiency.

B. In exercising the rights and remedies under this Paragraph 14.07, Owner shall proceed expeditiously. In connection with such corrective or remedial action, Owner may exclude Contractor from all or part of the Site, take possession of all or part of the Work and suspend Contractor's services related thereto, and incorporate in the Work all materials and equipment stored at the Site or for which Owner has paid Contractor but which are stored elsewhere. Contractor shall allow Owner, Owner's representatives, agents and employees, Owner's other contractors, and Engineer and Engineer's consultants access to the Site to enable Owner to exercise the rights and remedies under this paragraph.

C. All claims, costs, losses, and damages incurred or sustained by Owner in exercising the rights and remedies under this Paragraph 14.07 will be charged against Contractor as set-offs against payments due under Article 15. Such claims, costs, losses and damages will include but not be limited to all costs of repair, or replacement of work of others destroyed or damaged by correction, removal, or replacement of Contractor's defective Work.

D. Contractor shall not be allowed an extension of the Contract Times because of any delay in the performance of the Work attributable to the exercise by Owner of Owner's rights and remedies under this Paragraph 14.07.

ARTICLE 15—PAYMENTS TO CONTRACTOR; SET-OFFS; COMPLETION; CORRECTION PERIOD

15.01 *Progress Payments*

A. *Basis for Progress Payments*: The Schedule of Values established as provided in Article 2 will serve as the basis for progress payments and will be incorporated into a form of Application for Payment acceptable to Engineer. Progress payments for Unit Price Work will be based on the number of units completed during the pay period, as determined under the provisions of Paragraph 13.03. Progress payments for cost-based Work will be based on Cost of the Work completed by Contractor during the pay period.

B. *Applications for Payments*

1. At least 20 days before the date established in the Agreement for each progress payment (but not more often than once a month), Contractor shall submit to Engineer for review an Application for Payment filled out and signed by Contractor covering the Work completed as of the date of the Application and accompanied by such supporting documentation as is required by the Contract Documents.

2. If payment is requested on the basis of materials and equipment not incorporated in the Work but delivered and suitably stored at the Site or at another location agreed to in writing, the Application for Payment must also be accompanied by: (a) a bill of sale, invoice, copies of subcontract or purchase order payments, or other documentation

Copyright© 2018 National Society of Professional Engineers, American Council of Engineering Companies, and American Society of Civil Engineers. All rights reserved.

establishing full payment by Contractor for the materials and equipment; (b) at Owner's request, documentation warranting that Owner has received the materials and equipment free and clear of all Liens; and (c) evidence that the materials and equipment are covered by appropriate property insurance, a warehouse bond, or other arrangements to protect Owner's interest therein, all of which must be satisfactory to Owner.

3. Beginning with the second Application for Payment, each Application must include an affidavit of Contractor stating that all previous progress payments received by Contractor have been applied to discharge Contractor's legitimate obligations associated with prior Applications for Payment.

4. The amount of retainage with respect to progress payments will be as stipulated in the Agreement.

C. *Review of Applications*

1. Engineer will, within 10 days after receipt of each Application for Payment, including each resubmittal, either indicate in writing a recommendation of payment and present the Application to Owner, or return the Application to Contractor indicating in writing Engineer's reasons for refusing to recommend payment. In the latter case, Contractor may make the necessary corrections and resubmit the Application.

2. Engineer's recommendation of any payment requested in an Application for Payment will constitute a representation by Engineer to Owner, based on Engineer's observations of the executed Work as an experienced and qualified design professional, and on Engineer's review of the Application for Payment and the accompanying data and schedules, that to the best of Engineer's knowledge, information and belief:

   a. the Work has progressed to the point indicated;

   b. the quality of the Work is generally in accordance with the Contract Documents (subject to an evaluation of the Work as a functioning whole prior to or upon Substantial Completion, the results of any subsequent tests called for in the Contract Documents, a final determination of quantities and classifications for Unit Price Work under Paragraph 13.03, and any other qualifications stated in the recommendation); and

   c. the conditions precedent to Contractor's being entitled to such payment appear to have been fulfilled in so far as it is Engineer's responsibility to observe the Work.

3. By recommending any such payment Engineer will not thereby be deemed to have represented that:

   a. inspections made to check the quality or the quantity of the Work as it has been performed have been exhaustive, extended to every aspect of the Work in progress, or involved detailed inspections of the Work beyond the responsibilities specifically assigned to Engineer in the Contract; or

   b. there may not be other matters or issues between the parties that might entitle Contractor to be paid additionally by Owner or entitle Owner to withhold payment to Contractor.

Copyright© 2018 National Society of Professional Engineers, American Council of Engineering Companies, and American Society of Civil Engineers. All rights reserved.

4. Neither Engineer's review of Contractor's Work for the purposes of recommending payments nor Engineer's recommendation of any payment, including final payment, will impose responsibility on Engineer:

    a. to supervise, direct, or control the Work;

    b. for the means, methods, techniques, sequences, or procedures of construction, or the safety precautions and programs incident thereto;

    c. for Contractor's failure to comply with Laws and Regulations applicable to Contractor's performance of the Work;

    d. to make any examination to ascertain how or for what purposes Contractor has used the money paid by Owner; or

    e. to determine that title to any of the Work, materials, or equipment has passed to Owner free and clear of any Liens.

5. Engineer may refuse to recommend the whole or any part of any payment if, in Engineer's opinion, it would be incorrect to make the representations to Owner stated in Paragraph 15.01.C.2.

6. Engineer will recommend reductions in payment (set-offs) necessary in Engineer's opinion to protect Owner from loss because:

    a. the Work is defective, requiring correction or replacement;

    b. the Contract Price has been reduced by Change Orders;

    c. Owner has been required to correct defective Work in accordance with Paragraph 14.07, or has accepted defective Work pursuant to Paragraph 14.04;

    d. Owner has been required to remove or remediate a Hazardous Environmental Condition for which Contractor is responsible; or

    e. Engineer has actual knowledge of the occurrence of any of the events that would constitute a default by Contractor and therefore justify termination for cause under the Contract Documents.

D. *Payment Becomes Due*

1. Ten days after presentation of the Application for Payment to Owner with Engineer's recommendation, the amount recommended (subject to any Owner set-offs) will become due, and when due will be paid by Owner to Contractor.

E. *Reductions in Payment by Owner*

1. In addition to any reductions in payment (set-offs) recommended by Engineer, Owner is entitled to impose a set-off against payment based on any of the following:

    a. Claims have been made against Owner based on Contractor's conduct in the performance or furnishing of the Work, or Owner has incurred costs, losses, or damages resulting from Contractor's conduct in the performance or furnishing of the Work, including but not limited to claims, costs, losses, or damages from workplace injuries, adjacent property damage, non-compliance with Laws and Regulations, and patent infringement;

Copyright© 2018 National Society of Professional Engineers, American Council of Engineering Companies, and American Society of Civil Engineers. All rights reserved.

b. Contractor has failed to take reasonable and customary measures to avoid damage, delay, disruption, and interference with other work at or adjacent to the Site;

c. Contractor has failed to provide and maintain required bonds or insurance;

d. Owner has been required to remove or remediate a Hazardous Environmental Condition for which Contractor is responsible;

e. Owner has incurred extra charges or engineering costs related to submittal reviews, evaluations of proposed substitutes, tests and inspections, or return visits to manufacturing or assembly facilities;

f. The Work is defective, requiring correction or replacement;

g. Owner has been required to correct defective Work in accordance with Paragraph 14.07, or has accepted defective Work pursuant to Paragraph 14.04;

h. The Contract Price has been reduced by Change Orders;

i. An event has occurred that would constitute a default by Contractor and therefore justify a termination for cause;

j. Liquidated or other damages have accrued as a result of Contractor's failure to achieve Milestones, Substantial Completion, or final completion of the Work;

k. Liens have been filed in connection with the Work, except where Contractor has delivered a specific bond satisfactory to Owner to secure the satisfaction and discharge of such Liens; or

l. Other items entitle Owner to a set-off against the amount recommended.

2. If Owner imposes any set-off against payment, whether based on its own knowledge or on the written recommendations of Engineer, Owner will give Contractor immediate written notice (with a copy to Engineer) stating the reasons for such action and the specific amount of the reduction, and promptly pay Contractor any amount remaining after deduction of the amount so withheld. Owner shall promptly pay Contractor the amount so withheld, or any adjustment thereto agreed to by Owner and Contractor, if Contractor remedies the reasons for such action. The reduction imposed will be binding on Contractor unless it duly submits a Change Proposal contesting the reduction.

3. Upon a subsequent determination that Owner's refusal of payment was not justified, the amount wrongfully withheld will be treated as an amount due as determined by Paragraph 15.01.D.1 and subject to interest as provided in the Agreement.

15.02 *Contractor's Warranty of Title*

A. Contractor warrants and guarantees that title to all Work, materials, and equipment furnished under the Contract will pass to Owner free and clear of (1) all Liens and other title defects, and (2) all patent, licensing, copyright, or royalty obligations, no later than 7 days after the time of payment by Owner.

15.03 *Substantial Completion*

A. When Contractor considers the entire Work ready for its intended use Contractor shall notify Owner and Engineer in writing that the entire Work is substantially complete and request that Engineer issue a certificate of Substantial Completion. Contractor shall at the same time

Copyright© 2018 National Society of Professional Engineers, American Council of Engineering Companies, and American Society of Civil Engineers. All rights reserved.

submit to Owner and Engineer an initial draft of punch list items to be completed or corrected before final payment.

B. Promptly after Contractor's notification, Owner, Contractor, and Engineer shall make an inspection of the Work to determine the status of completion. If Engineer does not consider the Work substantially complete, Engineer will notify Contractor in writing giving the reasons therefor.

C. If Engineer considers the Work substantially complete, Engineer will deliver to Owner a preliminary certificate of Substantial Completion which will fix the date of Substantial Completion. Engineer shall attach to the certificate a punch list of items to be completed or corrected before final payment. Owner shall have 7 days after receipt of the preliminary certificate during which to make written objection to Engineer as to any provisions of the certificate or attached punch list. If, after considering the objections to the provisions of the preliminary certificate, Engineer concludes that the Work is not substantially complete, Engineer will, within 14 days after submission of the preliminary certificate to Owner, notify Contractor in writing that the Work is not substantially complete, stating the reasons therefor. If Owner does not object to the provisions of the certificate, or if despite consideration of Owner's objections Engineer concludes that the Work is substantially complete, then Engineer will, within said 14 days, execute and deliver to Owner and Contractor a final certificate of Substantial Completion (with a revised punch list of items to be completed or corrected) reflecting such changes from the preliminary certificate as Engineer believes justified after consideration of any objections from Owner.

D. At the time of receipt of the preliminary certificate of Substantial Completion, Owner and Contractor will confer regarding Owner's use or occupancy of the Work following Substantial Completion, review the builder's risk insurance policy with respect to the end of the builder's risk coverage, and confirm the transition to coverage of the Work under a permanent property insurance policy held by Owner. Unless Owner and Contractor agree otherwise in writing, Owner shall bear responsibility for security, operation, protection of the Work, property insurance, maintenance, heat, and utilities upon Owner's use or occupancy of the Work.

E. After Substantial Completion the Contractor shall promptly begin work on the punch list of items to be completed or corrected prior to final payment. In appropriate cases Contractor may submit monthly Applications for Payment for completed punch list items, following the progress payment procedures set forth above.

F. Owner shall have the right to exclude Contractor from the Site after the date of Substantial Completion subject to allowing Contractor reasonable access to remove its property and complete or correct items on the punch list.

15.04 *Partial Use or Occupancy*

A. Prior to Substantial Completion of all the Work, Owner may use or occupy any substantially completed part of the Work which has specifically been identified in the Contract Documents, or which Owner, Engineer, and Contractor agree constitutes a separately functioning and usable part of the Work that can be used by Owner for its intended purpose without

Copyright© 2018 National Society of Professional Engineers, American Council of Engineering Companies, and American Society of Civil Engineers. All rights reserved.

significant interference with Contractor's performance of the remainder of the Work, subject to the following conditions:

1. At any time, Owner may request in writing that Contractor permit Owner to use or occupy any such part of the Work that Owner believes to be substantially complete. If and when Contractor agrees that such part of the Work is substantially complete, Contractor, Owner, and Engineer will follow the procedures of Paragraph 15.03.A through 15.03.E for that part of the Work.

2. At any time, Contractor may notify Owner and Engineer in writing that Contractor considers any such part of the Work substantially complete and request Engineer to issue a certificate of Substantial Completion for that part of the Work.

3. Within a reasonable time after either such request, Owner, Contractor, and Engineer shall make an inspection of that part of the Work to determine its status of completion. If Engineer does not consider that part of the Work to be substantially complete, Engineer will notify Owner and Contractor in writing giving the reasons therefor. If Engineer considers that part of the Work to be substantially complete, the provisions of Paragraph 15.03 will apply with respect to certification of Substantial Completion of that part of the Work and the division of responsibility in respect thereof and access thereto.

4. No use or occupancy or separate operation of part of the Work may occur prior to compliance with the requirements of Paragraph 6.04 regarding builder's risk or other property insurance.

15.05 *Final Inspection*

A. Upon written notice from Contractor that the entire Work or an agreed portion thereof is complete, Engineer will promptly make a final inspection with Owner and Contractor and will notify Contractor in writing of all particulars in which this inspection reveals that the Work, or agreed portion thereof, is incomplete or defective. Contractor shall immediately take such measures as are necessary to complete such Work or remedy such deficiencies.

15.06 *Final Payment*

A. *Application for Payment*

1. After Contractor has, in the opinion of Engineer, satisfactorily completed all corrections identified during the final inspection and has delivered, in accordance with the Contract Documents, all maintenance and operating instructions, schedules, guarantees, bonds, certificates or other evidence of insurance, certificates of inspection, annotated record documents (as provided in Paragraph 7.12), and other documents, Contractor may make application for final payment.

2. The final Application for Payment must be accompanied (except as previously delivered) by:

   a. all documentation called for in the Contract Documents;

   b. consent of the surety, if any, to final payment;

   c. satisfactory evidence that all title issues have been resolved such that title to all Work, materials, and equipment has passed to Owner free and clear of any Liens or other title defects, or will so pass upon final payment.

Copyright© 2018 National Society of Professional Engineers, American Council of Engineering Companies, and American Society of Civil Engineers. All rights reserved.

d. a list of all duly pending Change Proposals and Claims; and

e. complete and legally effective releases or waivers (satisfactory to Owner) of all Lien rights arising out of the Work, and of Liens filed in connection with the Work.

3. In lieu of the releases or waivers of Liens specified in Paragraph 15.06.A.2 and as approved by Owner, Contractor may furnish receipts or releases in full and an affidavit of Contractor that: (a) the releases and receipts include all labor, services, material, and equipment for which a Lien could be filed; and (b) all payrolls, material and equipment bills, and other indebtedness connected with the Work for which Owner might in any way be responsible, or which might in any way result in liens or other burdens on Owner's property, have been paid or otherwise satisfied. If any Subcontractor or Supplier fails to furnish such a release or receipt in full, Contractor may furnish a bond or other collateral satisfactory to Owner to indemnify Owner against any Lien, or Owner at its option may issue joint checks payable to Contractor and specified Subcontractors and Suppliers.

B. *Engineer's Review of Final Application and Recommendation of Payment*: If, on the basis of Engineer's observation of the Work during construction and final inspection, and Engineer's review of the final Application for Payment and accompanying documentation as required by the Contract Documents, Engineer is satisfied that the Work has been completed and Contractor's other obligations under the Contract have been fulfilled, Engineer will, within 10 days after receipt of the final Application for Payment, indicate in writing Engineer's recommendation of final payment and present the final Application for Payment to Owner for payment. Such recommendation will account for any set-offs against payment that are necessary in Engineer's opinion to protect Owner from loss for the reasons stated above with respect to progress payments. Otherwise, Engineer will return the Application for Payment to Contractor, indicating in writing the reasons for refusing to recommend final payment, in which case Contractor shall make the necessary corrections and resubmit the Application for Payment.

C. *Notice of Acceptability*: In support of its recommendation of payment of the final Application for Payment, Engineer will also give written notice to Owner and Contractor that the Work is acceptable, subject to stated limitations in the notice and to the provisions of Paragraph 15.07.

D. *Completion of Work*: The Work is complete (subject to surviving obligations) when it is ready for final payment as established by the Engineer's written recommendation of final payment and issuance of notice of the acceptability of the Work.

E. *Final Payment Becomes Due*: Upon receipt from Engineer of the final Application for Payment and accompanying documentation, Owner shall set off against the amount recommended by Engineer for final payment any further sum to which Owner is entitled, including but not limited to set-offs for liquidated damages and set-offs allowed under the provisions of this Contract with respect to progress payments. Owner shall pay the resulting balance due to Contractor within 30 days of Owner's receipt of the final Application for Payment from Engineer.

15.07 *Waiver of Claims*

A. By making final payment, Owner waives its claim or right to liquidated damages or other damages for late completion by Contractor, except as set forth in an outstanding Claim,

Copyright© 2018 National Society of Professional Engineers, American Council of Engineering Companies, and American Society of Civil Engineers. All rights reserved.

appeal under the provisions of Article 17, set-off, or express reservation of rights by Owner. Owner reserves all other claims or rights after final payment.

B. The acceptance of final payment by Contractor will constitute a waiver by Contractor of all claims and rights against Owner other than those pending matters that have been duly submitted as a Claim, or appealed under the provisions of Article 17.

15.08 *Correction Period*

A. If within one year after the date of Substantial Completion (or such longer period of time as may be prescribed by the Supplementary Conditions or the terms of any applicable special guarantee required by the Contract Documents), Owner gives Contractor written notice that any Work has been found to be defective, or that Contractor's repair of any damages to the Site or adjacent areas has been found to be defective, then after receipt of such notice of defect Contractor shall promptly, without cost to Owner and in accordance with Owner's written instructions:

1. correct the defective repairs to the Site or such adjacent areas;
2. correct such defective Work;
3. remove the defective Work from the Project and replace it with Work that is not defective, if the defective Work has been rejected by Owner, and
4. satisfactorily correct or repair or remove and replace any damage to other Work, to the work of others, or to other land or areas resulting from the corrective measures.

B. Owner shall give any such notice of defect within 60 days of the discovery that such Work or repairs is defective. If such notice is given within such 60 days but after the end of the correction period, the notice will be deemed a notice of defective Work under Paragraph 7.17.B.

C. If, after receipt of a notice of defect within 60 days and within the correction period, Contractor does not promptly comply with the terms of Owner's written instructions, or in an emergency where delay would cause serious risk of loss or damage, Owner may have the defective Work corrected or repaired or may have the rejected Work removed and replaced. Contractor shall pay all costs, losses, and damages (including but not limited to all fees and charges of engineers, architects, attorneys, and other professionals and all court or arbitration or other dispute resolution costs) arising out of or relating to such correction or repair or such removal and replacement (including but not limited to all costs of repair or replacement of work of others). Contractor's failure to pay such costs, losses, and damages within 10 days of invoice from Owner will be deemed the start of an event giving rise to a Claim under Paragraph 12.01.B, such that any related Claim must be brought within 30 days of the failure to pay.

D. In special circumstances where a particular item of equipment is placed in continuous service before Substantial Completion of all the Work, the correction period for that item may start to run from an earlier date if so provided in the Specifications.

E. Where defective Work (and damage to other Work resulting therefrom) has been corrected or removed and replaced under this paragraph, the correction period hereunder with respect to such Work will be extended for an additional period of one year after such correction or removal and replacement has been satisfactorily completed.

Copyright© 2018 National Society of Professional Engineers, American Council of Engineering Companies, and American Society of Civil Engineers. All rights reserved.

F. Contractor's obligations under this paragraph are in addition to all other obligations and warranties. The provisions of this paragraph are not to be construed as a substitute for, or a waiver of, the provisions of any applicable statute of limitation or repose.

ARTICLE 16—SUSPENSION OF WORK AND TERMINATION

16.01 *Owner May Suspend Work*

A. At any time and without cause, Owner may suspend the Work or any portion thereof for a period of not more than 90 consecutive days by written notice to Contractor and Engineer. Such notice will fix the date on which Work will be resumed. Contractor shall resume the Work on the date so fixed. Contractor shall be entitled to an adjustment in the Contract Price or an extension of the Contract Times directly attributable to any such suspension. Any Change Proposal seeking such adjustments must be submitted no later than 30 days after the date fixed for resumption of Work.

16.02 *Owner May Terminate for Cause*

A. The occurrence of any one or more of the following events will constitute a default by Contractor and justify termination for cause:

1. Contractor's persistent failure to perform the Work in accordance with the Contract Documents (including, but not limited to, failure to supply sufficient skilled workers or suitable materials or equipment, or failure to adhere to the Progress Schedule);

2. Failure of Contractor to perform or otherwise to comply with a material term of the Contract Documents;

3. Contractor's disregard of Laws or Regulations of any public body having jurisdiction; or

4. Contractor's repeated disregard of the authority of Owner or Engineer.

B. If one or more of the events identified in Paragraph 16.02.A occurs, then after giving Contractor (and any surety) 10 days' written notice that Owner is considering a declaration that Contractor is in default and termination of the Contract, Owner may proceed to:

1. declare Contractor to be in default, and give Contractor (and any surety) written notice that the Contract is terminated; and

2. enforce the rights available to Owner under any applicable performance bond.

C. Subject to the terms and operation of any applicable performance bond, if Owner has terminated the Contract for cause, Owner may exclude Contractor from the Site, take possession of the Work, incorporate in the Work all materials and equipment stored at the Site or for which Owner has paid Contractor but which are stored elsewhere, and complete the Work as Owner may deem expedient.

D. Owner may not proceed with termination of the Contract under Paragraph 16.02.B if Contractor within 7 days of receipt of notice of intent to terminate begins to correct its failure to perform and proceeds diligently to cure such failure.

E. If Owner proceeds as provided in Paragraph 16.02.B, Contractor shall not be entitled to receive any further payment until the Work is completed. If the unpaid balance of the Contract Price exceeds the cost to complete the Work, including all related claims, costs, losses, and damages (including but not limited to all fees and charges of engineers, architects,

Copyright© 2018 National Society of Professional Engineers, American Council of Engineering Companies, and American Society of Civil Engineers. All rights reserved.

attorneys, and other professionals) sustained by Owner, such excess will be paid to Contractor. If the cost to complete the Work including such related claims, costs, losses, and damages exceeds such unpaid balance, Contractor shall pay the difference to Owner. Such claims, costs, losses, and damages incurred by Owner will be reviewed by Engineer as to their reasonableness and, when so approved by Engineer, incorporated in a Change Order. When exercising any rights or remedies under this paragraph, Owner shall not be required to obtain the lowest price for the Work performed.

F. Where Contractor's services have been so terminated by Owner, the termination will not affect any rights or remedies of Owner against Contractor then existing or which may thereafter accrue, or any rights or remedies of Owner against Contractor or any surety under any payment bond or performance bond. Any retention or payment of money due Contractor by Owner will not release Contractor from liability.

G. If and to the extent that Contractor has provided a performance bond under the provisions of Paragraph 6.01.A, the provisions of that bond will govern over any inconsistent provisions of Paragraphs 16.02.B and 16.02.D.

16.03 *Owner May Terminate for Convenience*

A. Upon 7 days' written notice to Contractor and Engineer, Owner may, without cause and without prejudice to any other right or remedy of Owner, terminate the Contract. In such case, Contractor shall be paid for (without duplication of any items):

1. completed and acceptable Work executed in accordance with the Contract Documents prior to the effective date of termination, including fair and reasonable sums for overhead and profit on such Work;

2. expenses sustained prior to the effective date of termination in performing services and furnishing labor, materials, or equipment as required by the Contract Documents in connection with uncompleted Work, plus fair and reasonable sums for overhead and profit on such expenses; and

3. other reasonable expenses directly attributable to termination, including costs incurred to prepare a termination for convenience cost proposal.

B. Contractor shall not be paid for any loss of anticipated profits or revenue, post-termination overhead costs, or other economic loss arising out of or resulting from such termination.

16.04 *Contractor May Stop Work or Terminate*

A. If, through no act or fault of Contractor, (1) the Work is suspended for more than 90 consecutive days by Owner or under an order of court or other public authority, or (2) Engineer fails to act on any Application for Payment within 30 days after it is submitted, or (3) Owner fails for 30 days to pay Contractor any sum finally determined to be due, then Contractor may, upon 7 days' written notice to Owner and Engineer, and provided Owner or Engineer do not remedy such suspension or failure within that time, terminate the contract and recover from Owner payment on the same terms as provided in Paragraph 16.03.

B. In lieu of terminating the Contract and without prejudice to any other right or remedy, if Engineer has failed to act on an Application for Payment within 30 days after it is submitted, or Owner has failed for 30 days to pay Contractor any sum finally determined to be due, Contractor may, 7 days after written notice to Owner and Engineer, stop the Work until payment is made of all such amounts due Contractor, including interest thereon. The

Copyright© 2018 National Society of Professional Engineers, American Council of Engineering Companies, and American Society of Civil Engineers. All rights reserved.

provisions of this paragraph are not intended to preclude Contractor from submitting a Change Proposal for an adjustment in Contract Price or Contract Times or otherwise for expenses or damage directly attributable to Contractor's stopping the Work as permitted by this paragraph.

ARTICLE 17—FINAL RESOLUTION OF DISPUTES

17.01 *Methods and Procedures*

A. *Disputes Subject to Final Resolution*: The following disputed matters are subject to final resolution under the provisions of this article:

1. A timely appeal of an approval in part and denial in part of a Claim, or of a denial in full, pursuant to Article 12; and

2. Disputes between Owner and Contractor concerning the Work, or obligations under the Contract Documents, that arise after final payment has been made.

B. *Final Resolution of Disputes*: For any dispute subject to resolution under this article, Owner or Contractor may:

1. elect in writing to invoke the dispute resolution process provided for in the Supplementary Conditions;

2. agree with the other party to submit the dispute to another dispute resolution process; or

3. if no dispute resolution process is provided for in the Supplementary Conditions or mutually agreed to, give written notice to the other party of the intent to submit the dispute to a court of competent jurisdiction.

ARTICLE 18—MISCELLANEOUS

18.01 *Giving Notice*

A. Whenever any provision of the Contract requires the giving of written notice to Owner, Engineer, or Contractor, it will be deemed to have been validly given only if delivered:

1. in person, by a commercial courier service or otherwise, to the recipient's place of business;

2. by registered or certified mail, postage prepaid, to the recipient's place of business; or

3. by e-mail to the recipient, with the words "Formal Notice" or similar in the e-mail's subject line.

18.02 *Computation of Times*

A. When any period of time is referred to in the Contract by days, it will be computed to exclude the first and include the last day of such period. If the last day of any such period falls on a Saturday or Sunday or on a day made a legal holiday by the law of the applicable jurisdiction, such day will be omitted from the computation.

Copyright© 2018 National Society of Professional Engineers, American Council of Engineering Companies, and American Society of Civil Engineers. All rights reserved.

18.03 *Cumulative Remedies*

A. The duties and obligations imposed by these General Conditions and the rights and remedies available hereunder to the parties hereto are in addition to, and are not to be construed in any way as a limitation of, any rights and remedies available to any or all of them which are otherwise imposed or available by Laws or Regulations, by special warranty or guarantee, or by other provisions of the Contract. The provisions of this paragraph will be as effective as if repeated specifically in the Contract Documents in connection with each particular duty, obligation, right, and remedy to which they apply.

18.04 *Limitation of Damages*

A. With respect to any and all Change Proposals, Claims, disputes subject to final resolution, and other matters at issue, neither Owner nor Engineer, nor any of their officers, directors, members, partners, employees, agents, consultants, or subcontractors, shall be liable to Contractor for any claims, costs, losses, or damages sustained by Contractor on or in connection with any other project or anticipated project.

18.05 *No Waiver*

A. A party's non-enforcement of any provision will not constitute a waiver of that provision, nor will it affect the enforceability of that provision or of the remainder of this Contract.

18.06 *Survival of Obligations*

A. All representations, indemnifications, warranties, and guarantees made in, required by, or given in accordance with the Contract, as well as all continuing obligations indicated in the Contract, will survive final payment, completion, and acceptance of the Work or termination of the Contract or of the services of Contractor.

18.07 *Controlling Law*

A. This Contract is to be governed by the law of the state in which the Project is located.

18.08 *Assignment of Contract*

A. Unless expressly agreed to elsewhere in the Contract, no assignment by a party to this Contract of any rights under or interests in the Contract will be binding on the other party without the written consent of the party sought to be bound; and, specifically but without limitation, money that may become due and money that is due may not be assigned without such consent (except to the extent that the effect of this restriction may be limited by law), and unless specifically stated to the contrary in any written consent to an assignment, no assignment will release or discharge the assignor from any duty or responsibility under the Contract.

18.09 *Successors and Assigns*

A. Owner and Contractor each binds itself, its successors, assigns, and legal representatives to the other party hereto, its successors, assigns, and legal representatives in respect to all covenants, agreements, and obligations contained in the Contract Documents.

18.10 *Headings*

A. Article and paragraph headings are inserted for convenience only and do not constitute parts of these General Conditions.

Copyright© 2018 National Society of Professional Engineers, American Council of Engineering Companies, and American Society of Civil Engineers. All rights reserved.

This document has important legal consequences; consultation with an attorney is encouraged with respect to its use or modification. This document should be adapted to the particular circumstances of the contemplated Project and the controlling Laws and Regulations.

SECTION 00 80 00
SUPPLEMENTARY CONDITIONS
OF THE CONSTRUCTION CONTRACT

Copyright© 2018 National Society of Professional Engineers, American Council of Engineering Companies, and American Society of Civil Engineers. All rights reserved.

Copyright© 2018

National Society of Professional Engineers

1420 King Street, Alexandria, VA 22314-2794

(703) 684-2882

www.nspe.org

American Council of Engineering Companies

1015 15th Street N.W., Washington, DC 20005

(202) 347-7474

www.acec.org

American Society of Civil Engineers

1801 Alexander Bell Drive, Reston, VA 20191-4400

(800) 548-2723

www.asce.org

The copyright for this EJCDC document is owned jointly by the three sponsoring organizations listed above. The National Society of Professional Engineers is the Copyright Administrator for the EJCDC documents; please direct all inquiries regarding EJCDC copyrights to NSPE.

NOTE: EJCDC publications may be purchased at www.ejcdc.org, or from any of the sponsoring organizations above.

SUPPLEMENTARY CONDITIONS OF THE CONSTRUCTION CONTRACT

TABLE OF CONTENTS

Page

Article 1— Definitions and Terminology 1
Article 2— Preliminary Matters 5
Article 3— Contract Documents: Intent, Requirements, Reuse 6
Article 4— Commencement and Progress of the Work 6
Article 5— Site, Subsurface and Physical Conditions, Hazardous Environmental Conditions 7
Article 6— Bonds and Insurance 8
Article 7— Contractor's Responsibilities 14
Article 8— Other Work at the Site 17
Article 9— Owner's Responsibilities 17
Article 10— Engineer's Status During Construction 17
Article 11— Changes to the Contract 20
Article 12— Claims 20
Article 13— Cost of Work; Allowances, Unit Price Work 20
Article 14— Tests and Inspections; Correction, Removal, or Accceptance of Defective Work 22
Article 15— Payments to Contractor, Set Offs; Completions; Correction Period 22
Article 16— suspension of work and termination 23
Article 17— Final Resolutions of Disputes 23
Article 18— MISCELLANEOUS 25
Article 19— FEDERAL REQUIREMENTS 25

Copyright© 2018 National Society of Professional Engineers, American Council of Engineering Companies, and American Society of Civil Engineers. All rights reserved.

SUPPLEMENTARY CONDITIONS OF THE CONSTRUCTION CONTRACT

These Supplementary Conditions amend or supplement EJCDC® C-700, Standard General Conditions of the Construction Contract (2018). The General Conditions remain in full force and effect except as amended.

The terms used in these Supplementary Conditions have the meanings stated in the General Conditions. Additional terms used in these Supplementary Conditions have the meanings stated below, which are applicable to both the singular and plural thereof.

The address system used in these Supplementary Conditions is the same as the address system used in the General Conditions, with the prefix "SC" added—for example, “Paragraph SC-4.05.”

ARTICLE 1—DEFINITIONS AND TERMINOLOGY

SC-1.01.A.8 Add the following at the end of paragraph 1.01.A.8:

The Change Order form to be used on this Project is EJCDC C-941 (2018). Agency approval is required before Change Orders are effective.

SC-1.01.A.30 Add the following at the end of paragraph 1.01.A.30:

For purposes of Rural Development, this term is synonymous with the term “applicant” as defined in 7 CFR 1780.7 (a) (1) and (3) and is an entity receiving financial assistance from the federal programs.

SC-1.01.A.50 Add the following at the end of paragraph 1.01.A.50:

The Work Change Directive form to be used on this Project is EJCDC C-940 (2018). Agency approval is required before a Work Change Directive is issued. A Work Change Directive cannot change Contract Price or Contract Times without a subsequent Change Order.

SC-1.01.A.51 Add the following new paragraph 1.01.A.51:

51. Agency- The Project is financed in whole or in party by USDA Rural Utilities Service pursuant to the Consolidated Farm and Rural Development Act (7 USC Section 1921 et seq.). The Rural Utilities Service programs are administered through the USDA Rural Development offices; therefore, the Agency for these documents is USDA Rural Development.

SC-1.01.A.52 Add the following new paragraph with the title “Domestic Preference Definitions” immediately after Paragraph 1.01.A.51:

52.a *Build America, Buy America Act (BABAA)* - Requirements mandated by Title IX of the Infrastructure Investment and Jobs Act (IIJA), Pub. L. 117-58, §§ 70901-70953-58 mandating domestic preference that all iron and steel, manufactured products, and construction materials are produced in the United States.

52.b *Construction Materials* - Those articles, materials, or supplies — other than an item of primarily iron or steel; a manufactured product; cement and cementitious materials; aggregates such as stone, sand, or gravel; or aggregate binding agents or additives— that are or consist primarily of: nonferrous metals, plastic and polymer- based products, glass, lumber or drywall.

Copyright© 2018 National Society of Professional Engineers, American Council of Engineering Companies, and American Society of Civil Engineers. All rights reserved.

52.c *Contractor's Certification* - Documentation submitted by the Contractor upon Substantial Completion of the Contract that all iron and steel, manufactured products, and construction materials are produced in the United States.

52.d *De Minimis* - Materials and products that represent a small portion of an infrastructure project, specifically no more than 5% of the project costs up to a maximum of $1,000,000,

52.e *Domestic Preference* - The Build America, Buy America Act (BABAA) requirements under Title IX of the Infrastructure Investment and Jobs Act (IIJA), Pub. L. 117-58, §§ 70901-70953.

52.f *Engineer's Certification* - Documentation submitted by the Engineer that Drawings, Specifications, and Bidding Documents comply with Domestic Preference requirements.

52.g *Manufactured Product* – Items assembled out of components, or otherwise made or processed from raw materials into finished products. Manufactured products must be manufactured (assembled) in the United States, and the cost of components that were mined, produced, or manufactured in the United States must be greater than 55 percent of the total cost of all components of the product.

52.h *Manufacturer's Certification* - Documentation provided by the Manufacturer stating that Domestic Preference requirements have been satisfied for all provided items. If items are purchased via a Supplier, distributor, vendor, etc. from the Manufacturer directly, then the Supplier, distributor, vendor, etc. will be responsible for obtaining and providing these certifications to the parties purchasing the products.

52.i *Primarily Iron or Steel* - A product is made of greater than 50 percent iron or Steel on a materials cost basis.

ARTICLE 2—PRELIMINARY MATTERS

2.01 *Delivery of Bonds and Evidence of Insurance*

SC-2.01 Add the following language at the end of the first sentence of Paragraph 2.01.A:

A. **Contractor shall use forms EJCDC No. C-610 and C-615 (2018 ed.) for the Labor and Material Payment Bond and Performance Bond. Each bond shall be in the amount of 100 percent of the Contract amount. City and Borough of Wrangell shall be named as co-obligee or a separate Warranty Bond shall be provided to them upon completion of the work.**

2.02 *Copies of Documents*

SC-2.02.A **– Delete [number] and insert in its place "five."**

2.03 *Before Starting Construction*

SC-2.03 Add the following new paragraph immediately after Paragraph 2.03.A.3:

4. **Contractor shall submit a preliminary list of construction equipment with hourly rates, owned or rented by the Contractor and all Subcontractors that will be used in the performance of the Work. The equipment list will include information necessary to confirm the hourly rates per Paragraph 13.01.B.5.c of these General Conditions**

Copyright© 2018 National Society of Professional Engineers, American Council of Engineering Companies, and American Society of Civil Engineers. All rights reserved.

including: make, model, and year of manufacture as well as horsepower, capacity or weight and accessories.

2.04 *Preconstruction Conference; Designation of Authorized Representatives*

SC-2.03 Add the following language at the end of the first sentence of Paragraph 2.04.A:

A. **The preconstruction conference will be held in Wrangell and will be coordinated with the Contractor after bid opening.**

2.05 *Initial Acceptance of Schedules*

SC-2.05 Delete Paragraph 2.05.A in its entirety and insert the following in its place:

A. **Prior to the first application for payment all schedules and documents identified in paragraph 2.03 shall be finalized and acceptable to Owner and Engineer. No progress payment shall be made to Contractor until acceptable schedules are submitted to Engineer and Owner as provided below. Acceptance of these schedules and documents by either Engineer or Owner will neither impose on Engineer or Owner responsibility for sequencing, scheduling or progress of the Work and will not interfere with or relieve Contractor from Contractor's full responsibility, therefore.**

SC-2.05 Add the following new paragraph immediately after Paragraph 2.05.A.3:

4. **Contractor's Schedule of Equipment will be acceptable to Engineer as to form and substance if it provides the necessary information to reference the equipment and establish the hourly rates in accordance with paragraph 13.01.B.5.c**.

ARTICLE 3—CONTRACT DOCUMENTS: INTENT, REQUIREMENTS, REUSE

No suggested Supplementary Conditions in this Article.

ARTICLE 4—COMMENCEMENT AND PROGRESS OF THE WORK

SC- 4.01.A. Delete the last sentence of paragraph 4.01.A

4.05 *Delays in Contractor's Progress*

SC-4.05 Amend Paragraph 4.05.C by adding the following subparagraphs

SC-4.05.C.5 **Add Paragraph 4.05.C.5 which is mandatory for Water and Waste Disposal (WWD) projects:**

5. *Weather-Related Delays*

a. If "abnormal weather conditions" as set forth in Paragraph 4.05.C.2 of the General Conditions are the basis for a request for an equitable adjustment in the Contract Times, such request must be documented by data substantiating each of the following: 1) that weather conditions were abnormal for the period of time in which the delay occurred, 2) that such weather conditions could not have been reasonably anticipated, and 3) that such weather conditions had an adverse effect on the Work as scheduled. **Extreme or unusual weather that is typical for a given region, elevation, or season should not be considered abnormal weather conditions. Requests for time extensions due to abnormal weather conditions will be submitted to the Engineer within five days of the end of the abnormal**

Copyright© 2018 National Society of Professional Engineers, American Council of Engineering Companies, and American Society of Civil Engineers. All rights reserved.

weather condition event. It is the responsibility of the Contractor to provide the information listed in SC 4.05.C.5.b.

~~b. The existence of abnormal weather conditions will be determined on a month-by-month basis in accordance with the following:~~

~~1) Every workday on which one or more of the following conditions exist will be considered a "bad weather day":~~

~~i) Total precipitation (as rain equivalent) occurring between 7:00 p.m. on the preceding day (regardless of whether such preceding day is a workday) through 7:00 p.m. on the workday in question equals or exceeds **[threshold precipitation quantity]** of precipitation (as rain equivalent, based on the snow/rain conversion indicated in the table entitled Foreseeable Bad Weather Days; such table is hereby incorporated in this SC-4.05.C by reference.~~

~~ii) Ambient outdoor air temperature at 11:00 a.m. is equal to or less than the following low temperature threshold: **[temperature]** degrees Fahrenheit; or, at 3:00 p.m. the ambient outdoor temperature is equal to or greater than the following high temperature threshold: **[temperature]** degrees Fahrenheit.~~

~~2) Determination of actual bad weather days during performance of the Work will be based on the weather records measured and recorded by **[name of the entity operating the weather station]** weather monitoring station at **[location of the weather monitoring station]**.~~

~~3) Contractor shall anticipate the number of foreseeable bad weather days per month indicated in the table in Exhibit **[exhibit number]**—Foreseeable Bad Weather Days.~~

~~4) In each month, every bad weather day exceeding the number of foreseeable bad weather days established in the table in Exhibit **[exhibit number]**—Foreseeable Bad Weather Days will be considered as "abnormal weather conditions." The existence of abnormal weather conditions will not relieve Contractor of the obligation to demonstrate and document that delays caused by abnormal weather are specific to the planned work activities or that such activities thus delayed were on Contractor's then-current Progress Schedule's critical pa~~.

ARTICLE 5—SITE, SUBSURFACE AND PHYSICAL CONDITIONS, HAZARDOUS ENVIRONMENTAL CONDITIONS

5.01 *Availability of Lands*

SC-5.01 Add the following language at the end of the first sentence of Paragraph 5.01.C:

C. **If it is necessary or desirable that the Contractor use land outside of the Owner's site, easement or right-of-way, the Contractor shall obtain consent from the property owner and tenant of the land. The Contractor shall not enter for material delivery, storage or occupy for any other purpose with men, tools, equipment, construction material, or with**

Copyright© 2018 National Society of Professional Engineers, American Council of Engineering Companies, and American Society of Civil Engineers. All rights reserved.

materials excavated from the site, any private property outside the designated limits of the construction site, easement boundaries, or right-of-way without written permission from the property owner and tenant.

5.03 *Subsurface and Physical Conditions*

SC-5.03 Add the following new paragraph immediately after Paragraph 5.03.B:

1. **Contractor is required to visit the site and become familiar with and satisfied as to the general, local, and site conditions that may affect cost, progress, performance, and furnishing of the Work. The site visit shall involve an alert, heads-up, eyes open, reasonable examination of the area and the conditions under which the Work is to be performed (See 5.04 E.2b).**

SC-5.03 Add the following new paragraphs immediately after Paragraph 5.03.D:

E. The following report of explorations and tests of subsurface conditions at or adjacent to the Site contains Technical Data, and specifically identifies the Technical Data in the report upon which Contractor may rely: ***Wrangell Water Treatment Plant Design Geotechnical Investigation*** **dated June 7, 2022 by DOWL.**

5.04 *Differing Subsurface or Physical Conditions*

SC-5.04 Add the following new paragraph immediately after Paragraph 5.04.A:

No Change Proposal or Claim for an adjustment in Contract Price or Contract Time (including Milestones) will be valid for differing subsurface or physical conditions if provisions of the Paragraph 5.04 are not followed.

5.05 *Underground Facilities*

SC-5.05 Delete Paragraph 5.05.E in its entirety and insert the following in its place:

E. **Contractor shall be paid at the Bid Price for encountering Underground Facilities and will not be entitled to additional equitable adjustment in the Contract Price or Contract Times, or both, unless the Engineer's review determines that the existing facility is unusual and shouldn't be covered by the unit price and existing Underground Facility at the Site was not shown or indicated in the Contract Documents, or was not shown or indicated with reasonable accuracy, and resulted in delay, disruption, or interference, causing an increase or decrease in Contractor's cost of, or time required for, performance of the Work; subject, however, to the following:**

~~5.06 *Hazardous Environmental Conditions*~~

~~SC-5.06 Add the following new paragraphs immediately after Paragraph 5.06.A.3:~~

~~4. The following report known to Owner relates to Hazardous Environmental Conditions at or adjacent to the Site, and the Technical Data (if any) upon which Contractor may rely:~~

ARTICLE 6—BONDS AND INSURANCE

6.01 *Performance, Payment, and Other Bonds*

Copyright© 2018 National Society of Professional Engineers, American Council of Engineering Companies, and American Society of Civil Engineers. All rights reserved.

SC-6.01 Disregard EJCDC Guidance Notes – Performance and Payment Bonds, Note 1. Performance and Payment Bonds are required for WWD projects.

SC-6.01 EJCDC Guidance Notes – "Other Bonds," Warranty Bond, Note 1. RD does not require a Warranty Bond, and RD will not accept a Warranty Bond in place of a Performance and Payment Bond. The decision to include a Warranty Bond is made by the Owner and their counsel. Please refer to EJCDC for guidance.

6.03 *Contractor's Insurance*

SC-6.03 Supplement Paragraph 6.03 with the following provisions after Paragraph 6.03.C:

D. *Other Additional Insureds:* As a supplement to the provisions of Paragraph 6.03.C of the General Conditions, the commercial general liability, automobile liability, umbrella or excess, pollution liability, and unmanned aerial vehicle liability policies must include as additional insureds (in addition to Owner and Engineer) the following:

E. *Workers' Compensation and Employer's Liability:* Contractor shall purchase and maintain workers' compensation and employer's liability insurance, including, as applicable, United States Longshoreman and Harbor Workers' Compensation Act, Jones Act, stop-gap employer's liability coverage for monopolistic states, and foreign voluntary workers' compensation (from available sources, notwithstanding the jurisdictional requirement of Paragraph 6.02.B of the General Conditions).

Workers' Compensation and Related Policies	Policy limits of not less than:
Workers' Compensation	
State	Statutory
Applicable Federal (e.g., Longshoreman's)	Statutory
Foreign voluntary workers' compensation (employer's responsibility coverage), if applicable	Statutory
Jones Act (if applicable)	
Bodily injury by accident—each accident	$ 1,000,000
Bodily injury by disease—aggregate	$ 1,000,000
Employer's Liability	
Each accident	$ 1,000,000
Each employee	$ 1,000,000
Policy limit	$
~~**Stop-gap Liability Coverage**~~	
~~For work performed in monopolistic states, stop-gap liability coverage must be endorsed to either the worker's compensation or commercial general liability policy with a minimum limit of:~~	~~$~~

F. *Commercial General Liability—Claims Covered:* Contractor shall purchase and maintain commercial general liability insurance, covering all operations by or on behalf of Contractor, on an occurrence basis, against claims for:

1. damages because of bodily injury, sickness or disease, or death of any person other than Contractor's employees,

2. damages insured by reasonably available personal injury liability coverage, and

Copyright© 2018 National Society of Professional Engineers, American Council of Engineering Companies, and American Society of Civil Engineers. All rights reserved.

3. damages because of injury to or destruction of tangible property wherever located, including loss of use resulting therefrom.

G. *Commercial General Liability—Form and Content:* Contractor's commercial liability policy must be written on a 1996 (or later) Insurance Services Organization, Inc. (ISO) commercial general liability form (occurrence form) and include the following coverages and endorsements:

1. Products and completed operations coverage.

   a. Such insurance must be maintained for three years after final payment.

   b. Contractor shall furnish Owner and each other additional insured (as identified in the Supplementary Conditions or elsewhere in the Contract) evidence of continuation of such insurance at final payment and three years thereafter.

2. Blanket contractual liability coverage, including but not limited to coverage of Contractor's contractual indemnity obligations in Paragraph 7.18.

3. Severability of interests and no insured-versus-insured or cross-liability exclusions.

4. Underground, explosion, and collapse coverage.

5. Personal injury coverage.

6. Additional insured endorsements that include both ongoing operations and products and completed operations coverage through ISO Endorsements CG 20 10 10 01 and CG 20 37 10 01 (together). If Contractor demonstrates to Owner that the specified ISO endorsements are not commercially available, then Contractor may satisfy this requirement by providing equivalent endorsements.

7. For design professional additional insureds, ISO Endorsement CG 20 32 07 04 "Additional Insured—Engineers, Architects or Surveyors Not Engaged by the Named Insured" or its equivalent.

H. *Commercial General Liability—Excluded Content:* The commercial general liability insurance policy, including its coverages, endorsements, and incorporated provisions, must not include any of the following:

1. Any modification of the standard definition of "insured contract" (except to delete the railroad protective liability exclusion if Contractor is required to indemnify a railroad or others with respect to Work within 50 feet of railroad property).

2. Any exclusion for water intrusion or water damage.

3. Any provisions resulting in the erosion of insurance limits by defense costs other than those already incorporated in ISO form CG 00 01.

4. Any exclusion of coverage relating to earth subsidence or movement.

5. Any exclusion for the insured's vicarious liability, strict liability, or statutory liability (other than worker's compensation).

6. Any limitation or exclusion based on the nature of Contractor's work.

7. Any professional liability exclusion broader in effect than the most recent edition of ISO form CG 22 79.

Copyright© 2018 National Society of Professional Engineers, American Council of Engineering Companies, and American Society of Civil Engineers. All rights reserved.

I. *Commercial General Liability—Minimum Policy Limits*

Commercial General Liability	Policy limits of not less than:
General Aggregate	$ 2,000,000
Products—Completed Operations Aggregate	$ 1,000,000
Personal and Advertising Injury	$ 1,000,000
Bodily Injury and Property Damage—Each Occurrence	$ 1,000,000

J. *Automobile Liability:* Contractor shall purchase and maintain automobile liability insurance for damages because of bodily injury or death of any person or property damage arising out of the ownership, maintenance, or use of any motor vehicle. The automobile liability policy must be written on an occurrence basis.

Automobile Liability	Policy limits of not less than:
~~**Bodily Injury**~~	
~~Each Person~~	~~$~~
~~Each Accident~~	~~$~~
~~**Property Damage**~~	
~~Each Accident~~	~~$~~
~~**[or]**~~	
Combined Single Limit	
Combined Single Limit (Bodily Injury and Property Damage)	$ 1,000,000

K. *Umbrella or Excess Liability:* Contractor shall purchase and maintain umbrella or excess liability insurance written over the underlying employer's liability, commercial general liability, and automobile liability insurance described in the Paragraphs above. The coverage afforded must be at least as broad as that of each and every one of the underlying policies.

Excess or Umbrella Liability	Policy limits of not less than:
Each Occurrence	$ 5,000,000
General Aggregate	$ 5,000,000

L. Deleted

M. *Contractor's Pollution Liability Insurance:* Contractor shall purchase and maintain a policy covering third-party injury and property damage, including cleanup costs, as a result of pollution conditions arising from Contractor's operations and completed operations. This insurance must be maintained for no less than three years after final completion.

Contractor's Pollution Liability	Policy limits of not less than:
Each Occurrence/Claim	$ 500,000
General Aggregate	$ 500,000

Copyright© 2018 National Society of Professional Engineers, American Council of Engineering Companies, and American Society of Civil Engineers. All rights reserved.

N. *Contractor's Professional Liability Insurance:* If Contractor will provide or furnish professional services under this *Contract*, through a delegation of professional design services or otherwise, then Contractor shall be responsible for purchasing and maintaining applicable professional liability insurance. This insurance must cover negligent acts, errors, or omissions in the performance of professional design or related services by the insured or others for whom the insured is legally liable. The insurance must be maintained throughout the duration of the Contract and for a minimum of two years after Substantial Completion. The retroactive date on the policy must pre-date the commencement of furnishing services on the Project.

Contractor's Professional Liability	**Policy limits of not less than:**
Each Claim	$ 2,000,000
Annual Aggregate	$ 2,000,000

O. Deleted

~~**Railroad Protective Liability Insurance**~~	~~**Policy limits of not less than:**~~
~~Each Claim~~	~~$~~
~~Aggregate~~	~~$~~

P. Deleted

~~**Unmanned Aerial Vehicle Liability Insurance**~~	~~**Policy limits of not less than:**~~
~~Each Claim~~	~~$~~
~~General Aggregate~~	~~$~~

Q. Deleted

6.04 *Builder's Risk and Other Property Insurance*

SC-6.04 Delete Paragraph 6.04.A and insert the following in its place:

A. Contractor shall purchase and maintain builder's risk insurance upon the Work on a completed value basis, in the amount of the Work's full insurable replacement cost (subject to such deductible amounts as may be provided in the Supplementary Conditions or required by Laws and Regulations). The specific requirements applicable to the builder's risk insurance are set forth in the Supplementary Conditions.

SC-6.04 Supplement Paragraph 6.04 of the General Conditions with the following provisions:

F. *Builder's Risk Requirements:* The builder's risk insurance must:

1. be written on a builder's risk "all risk" policy form that at a minimum includes insurance for physical loss or damage to the Work, temporary buildings, falsework, and materials and equipment stored and in transit, and must not exclude the coverage of the following risks: fire; windstorm; hail; flood; earthquake, volcanic activity, and other earth movement; lightning; riot; civil commotion; terrorism; vehicle impact; aircraft; smoke; theft; vandalism and malicious mischief; mechanical breakdown, boiler explosion, and

Copyright© 2018 National Society of Professional Engineers, American Council of Engineering Companies, and American Society of Civil Engineers. All rights reserved.

artificially generated electric current; collapse; explosion; debris removal; demolition occasioned by enforcement of Laws and Regulations; and water damage (other than that caused by flood).

a. Such policy will include an exception that results in coverage for ensuing losses from physical damage or loss with respect to any defective workmanship, methods, design, or materials exclusions.

b. If insurance against mechanical breakdown, boiler explosion, and artificially generated electric current; earthquake, volcanic activity, and other earth movement; or flood, are not commercially available under builder's risk policies, by endorsement or otherwise, such insurance will be provided through other insurance policies acceptable to Owner and Contractor.

2. cover, as insured property, at least the following: (a) the Work and all materials, supplies, machinery, apparatus, equipment, fixtures, and other property of a similar nature that are to be incorporated into or used in the preparation, fabrication, construction, erection, or completion of the Work, including Owner-furnished or assigned property; (b) spare parts inventory required within the scope of the Contract; and (c) temporary works which are not intended to form part of the permanent constructed Work but which are intended to provide working access to the Site, or to the Work under construction, or which are intended to provide temporary support for the Work under construction, including scaffolding, form work, fences, shoring, falsework, and temporary structures.

3. cover expenses incurred in the repair or replacement of any insured property (including but not limited to fees and charges of contractors, engineers, and architects).

4. extend to cover damage or loss to insured property while in temporary storage at the Site or in a storage location outside the Site (but not including property stored at the premises of a manufacturer or Supplier). If this coverage is subject to a sublimit, such sublimit will be a minimum of $**1,000,000**.

5. extend to cover damage or loss to insured property while in transit. If this coverage is subject to a sublimit, such sublimit will be a minimum of $1,000,000.

6. allow for the waiver of the insurer's subrogation rights, as set forth in this Contract.

7. allow for partial occupancy or use by Owner by endorsement, and without cancellation or lapse of coverage.

8. include performance/hot testing and start-up, if applicable.

9. be maintained in effect until the Work is complete, as set forth in Paragraph 15.06.D of the General Conditions, or until written confirmation of Owner's procurement of property insurance following Substantial Completion, whichever occurs first.

10 include as named insureds the Owner, Contractor, Subcontractors (of every tier), and any other individuals or entities required by this Contract to be insured under such builder's risk policy. For purposes of Paragraphs 6.04, 6.05, and 6.06 of the General Conditions, and this and all other corresponding Supplementary Conditions, the parties required to be insured will be referred to collectively as "insureds." In addition to Owner, Contractor, and Subcontractors of every tier, include as insureds the following:

Copyright© 2018 National Society of Professional Engineers, American Council of Engineering Companies, and American Society of Civil Engineers. All rights reserved.

a. **None**

11. ~~include, in addition to the Contract Price amount, the value of the following equipment and materials to be installed by the Contractor but furnished by the Owner or third parties:~~

    a. ~~**[Here list or provide cross-reference to specific items of Owner-furnished (or third-party furnished) equipment, and purchase value; do not list items whose value is already included in the Contract Price.]**~~

12. If debris removal in connection with repair or replacement of insured property is subject to a coverage sublimit, such sublimit will be a minimum of $**1,000,000**.

13. Deleted

SC-6.04 Supplement Paragraph 6.04 of the General Conditions with the following provision:

G. *Coverage for Completion Delays:* The builder's risk policy will include, for the benefit of Owner, loss of revenue and soft cost coverage for losses arising from delays in completion that result from covered physical losses or damage. Such coverage will include, without limitation, fixed expenses and debt service for a minimum of 12 months with a maximum deductible of 30 days, compensation for loss of net revenues, rental costs, and attorneys' fees and engineering or other consultants' fees, if not otherwise covered.

SC-6.04 Supplement Paragraph 6.04 of the General Conditions with the following provisions:

H. *Builder's Risk and Other Property Insurance Deductibles:* The purchaser of any required builder's risk, installation floater, or other property insurance will be responsible for costs not covered because of the application of a policy deductible.

1. The builder's risk policy (or if applicable the installation floater) will be subject to a deductible amount of no more than $**5,000** for direct physical loss in any one occurrence.

ARTICLE 7—CONTRACTOR'S RESPONSIBILITIES

7.03 *Labor; Working Hours*

SC-7.03 Add the following new subparagraphs immediately after Paragraph 7.03.C:

1. Regular working hours will be **7:00 am to 7:00 pm**.

2. Owner's legal holidays are **New Year's Day, Martin Luther King Jr. Day, President's Day, Seward's Day, Memorial Day, Independence Day, Labor Day, Veteran's Day, Thanksgiving and Christmas.**

SC-7.03 Amend the first and second sentences of Paragraph 7.03.C to state "…all Work at the Site must be performed during regular working hours, **Monday** through **Saturday.** Contractor will not perform Work on any legal holiday."

SC-7.03 Add the following new paragraph immediately after Paragraph 7.03.C:

D. Owner shall be responsible for the cost of any overtime pay or other expense incurred by the Owner for Engineer's services (including those of the Resident Project Representative, if any), Owner's representative, and construction observation services, occasioned by the performance of Work on Saturday, Sunday, any legal holiday, or as overtime on any regular

Copyright© 2018 National Society of Professional Engineers, American Council of Engineering Companies, and American Society of Civil Engineers. All rights reserved.

workday. If the parties are unable to agree as to the amount owed, then Owner may impose a reasonable set-off against payments due under Article 15.

SC- 7.04.D Add the following new paragraph immediately after Paragraph 7.04.C:

D. All **products must meet Domestic Preference requirements.**

SC- 7.04 .E Add the following new paragraph immediately after Paragraph 7.04.D:

E. For projects utilizing *De Minimis* waiver, Contractor shall maintain an itemized list of non-domestically produced components and ensure that the cost is less than 5% of total project cost for project up to a maximum of $1,000,000.

SC- 7.04 .F ADD THE FOLLOWING NEW PARAGRAPH IMMEDIATELY AFTER PARAGRAPH 7.04.E:

F. **All products must meet BABAA requirements.**
Contractor shall include Manufacturer's Certification for BABAA requirements with all applicable submittals. If a specific manufacture is used in the bidding, a statement that Manufacturer will comply with BABAA must be included with the bid submission. Contractor shall comply with BABAA requirements, including coordination with manufacturers, distributors, and suppliers to correct deficiencies in any BABAA documentation.
Engineer/Architect approval of shop drawings or samples shall include review of BABAA documentation.
Contractor shall certify upon completion that all work and materials have complied with BABAA requirements.
For any change orders, Contractor shall provide BABAA documentation for any new products or materials required by the change.
Installation of materials or products that are not compliant with BABAA requirements shall be considered defective work. Contractor should ensure that Engineer/Architect has an approved Manufacturer's Certification or waiver prior to items being delivered to the project site.
By submitting an application for payment, based in whole or in part on furnishing equipment or materials, Contractor certifies that such equipment and materials, to contractor's knowledge, are compliant with BABAA requirements.

SC-7.05.A Amend the third sentence of paragraph by striking out the following words: Unless the specification or description contains or is followed by words reading that no like, equivalent, or "or-equal" item is permitted,

SC-7.05.A.1.a.3 Amend the last sentence of Paragraph a.3 by striking out "and;" and adding a period at the end of Paragraph a.3.

SC-7.05.A.1.a.4 Delete paragraph in its entirety and insert "Deleted."

SC-7.05.B Add the following at the end of paragraph 7.05.B:

Contractor shall include a Manufacturer's Certification or waiver for compliance with Domestic Preference requirements and supporting data, as applicable. Refer to Manufacturer's Certification Letter provided in these Contract Documents.

SC-7.06.A.3.a.2 Remove "and" from the end of paragraph.

Copyright© 2018 National Society of Professional Engineers, American Council of Engineering Companies, and American Society of Civil Engineers. All rights reserved.

SC-7.06.A.3.a.3 Add "; and" to the end of paragraph SC-7.06.A.3.a.3.

SC-7.06.A.3.a.4 Add the following new paragraph immediately after Paragraph 7.06.A.3.a.3:

4. Comply with Domestic Preference requirements by providing Manufacturer's Certification or waiver, as applicable. Refer to Sample Language for Manufacturer's Certification provided in these Contract Documents.

SC-7.07.A Amend SC-7.07.A by adding the following to the end of the paragraph:

The total amount of work subcontracted by the Contractor shall not exceed fifty percent of the Contract price without prior approval from the Owner, Engineer and Agency.

SC-7.07.B Delete paragraph 7.07.B in its entirety and insert "Deleted".

SC-7.07.E Delete the second sentence of paragraph SC-7.07.E and insert the following in its place:

Owner may not require that Contractor use a specific replacement.

SC-7.12.A Amend paragraph SC-7.12.A by adding the following after "written interpretations and clarifications,":

Manufacturers' Certifications,

SC-7.12.A Add the following at the end of paragraph 7.12.A:

The Engineer will transfer the Contractor's record information to the original drawings and submit prints to the Contractor for review. Contractor shall provide writing confirmation that the record drawings are complete and accurate before final payment is approved by the Engineer.

7.13 *Safety and Protection*

SC-7.13K-N **Add the following new paragraphs immediately after Paragraph 7.13.J:**

K. **It is expressly understood by the parties to this Agreement that the Contractor is solely responsible for initiation, maintenance, and supervision of safety precautions and programs in connection with the Work. The right of the Owner and Engineer to observe or otherwise review the Work and operations shall not relieve the Contractor from any of his covenants and obligations hereunder.**

L. **The Contractor shall be responsible for and shall take necessary precautions and provide all material and equipment to protect, shore, brace and maintain all underground pipes, conduits, drains, sewers, water mains, gas mains, cables, and other underground construction uncovered in the proximity or otherwise affected by the Work. All pavement surfacing, driveways, curbs, walks, buildings, grass areas, trees, utility poles or guy wires damaged by the Contractor in performance of the Work shall be repaired and/or replaced to the satisfaction of the Owner, Engineer and effected property owner at the Contractor's expense. The Contractor shall also be responsible for all damage to streets, roads, highways, shoulders, ditches, embankments, culverts, bridges or other public or private property or facility, regardless of location or character, which may be caused by moving, hauling, or otherwise transporting equipment, materials, or men to and from the Work whether by Contractor or Subcontractors. The Contractor shall make satisfactory and acceptable arrangements with the owner of, or the agency or authority having jurisdiction over the damaged property or facility concerning its repair, replacement or payment of costs incurred in connection with said damage.**

Copyright© 2018 National Society of Professional Engineers, American Council of Engineering Companies, and American Society of Civil Engineers. All rights reserved.

M. **The Contractor shall conduct its work so as to interfere as little as possible with public travel, whether vehicular or pedestrian. Whenever it is necessary to cross, obstruct or close roads, driveways, and walks, whether public or private, the Contactor shall obtain approval from the governing party and shall at its own expense provide and maintain suitable and safe bridges, detours and other temporary expedients for the accommodation of public and private drives before interfering with them. The provision for temporary expedients will not be required if the Contractor has obtained permission from the owner and tenant of the private property, or from the authority having jurisdiction over public property involved, to obstruct traffic at the designated point.**

N. **Safety provisions must be entirely adequate and meet with City, State or Federal regulations to protect the public on the sidewalks, streets and roads.**

SC-7.16 .A.1.c Amend paragraph by deleting the last period and adding:

, including Manufacturer's Certification, or waiver for any item in the submittal subject to Domestic Preference requirements. Refer to the Sample Language for Manufacturer's Certification provided in these Contract Documents.

SC-7.16 C.9 Add the following new paragraph immediately after Paragraph 7.16.C.8:

9. Engineer's review and approval of a Shop Drawing or Sample shall include review of Manufacturers' Certifications and any waivers in order to document compliance with Domestic Preference requirements, as applicable.

SC-7.17.F Add new paragraph immediately after Paragraph 7.17.E:

F. Contractor shall certify upon Substantial Completion that all Work and Materials have complied with Domestic Preference requirements. Contractor shall provide Certification to Owner and Engineer. Refer to the Sample Language for Contractor's Certification provided in these Contract Documents.

SC-7.18.B.1 Add new paragraph immediately after Paragraph 7.18.B:

1. **Contractor specifically and expressly waives any immunity that may be granted it under workers' compensation acts, disability benefit acts, or other employee benefit acts in regard to 17.1.B above; provided Contractor's waiver of immunity by the provisions of this paragraph extends only to claims against Contractor by Indemnitees, and does not include, or extend to, any claims by Contractor's employees directly against Contractor.**

ARTICLE 8—~~OTHER WORK AT THE SITE~~

~~8.02 *Coordination*~~

~~SC-8.02 Add the following new Paragraph 8.02.C immediately after Paragraph 8.02.B:~~

~~C. Owner intends to contract with others for the performance of other work at or adjacent to the Site.~~

~~1. **[Here identify individual or entirety]** shall have authority and responsibility for coordination of the various contractors and work forces at the Site;~~

~~2. The following specific matters are to be covered by such authority and responsibility: **[Here itemize such matters]**;~~

Copyright© 2018 National Society of Professional Engineers, American Council of Engineering Companies, and American Society of Civil Engineers. All rights reserved.

3. The extent of such authority and responsibilities is: **[Here provide the extent]**.

ARTICLE 9—OWNER'S RESPONSIBILITIES

9.13 *Owner's Site Representative*

SC-9.13 Add the following new paragraph immediately after Paragraph 9.12 of the General Conditions:

9.13 *Owner's Site Representative*

A. Owner will furnish an "Owner's Site Representative" to represent Owner at the Site and assist Owner in observing the progress and quality of the Work. The Owner's Site Representative is not Engineer's consultant, agent, or employee. Owner's Site Representative will be [**here identify individual or entity]**. The authority and responsibilities of Owner's Site Representative follow: **[Here describe the duties and activities of the Owner's Site Representative.]**

ARTICLE 10—ENGINEER'S STATUS DURING CONSTRUCTION

10.03 *Resident Project Representative*

SC-10.03 Add the following new paragraphs immediately after Paragraph 10.03.B:

C. The Resident Project Representative (RPR) will be Engineer's representative at the Site. RPR's dealings in matters pertaining to the Work in general will be with Engineer and Contractor. RPR's dealings with Subcontractors will only be through or with the full knowledge or approval of Contractor. The RPR will:

1. *Conferences and Meetings:* Attend meetings with Contractor, such as preconstruction conferences, progress meetings, job conferences, and other Project-related meetings (but not including Contractor's safety meetings), and as appropriate prepare and circulate copies of minutes thereof.

2. *Safety Compliance:* Comply with Site safety programs, as they apply to RPR, and if required to do so by such safety programs, receive safety training specifically related to RPR's own personal safety while at the Site.

3. *Liaison*

a. Serve as Engineer's liaison with Contractor. Working principally through Contractor's authorized representative or designee, assist in providing information regarding the provisions and intent of the Contract Documents.

b. Assist Engineer in serving as Owner's liaison with Contractor when Contractor's operations affect Owner's on-Site operations.

c. Assist in obtaining from Owner additional details or information, when required for Contractor's proper execution of the Work.

d. Report to Engineer when clarifications and interpretations of the Contract Documents are needed and transmit to Contractor clarifications and interpretations as issued by Engineer.

Copyright© 2018 National Society of Professional Engineers, American Council of Engineering Companies, and American Society of Civil Engineers. All rights reserved.

4. *Review of Work; Defective Work*

    a. Conduct on-Site observations of the Work to assist Engineer in determining, to the extent set forth in Paragraph 10.02, if the Work is in general proceeding in accordance with the Contract Documents.

    b. Observe whether any Work in place appears to be defective.

    c. Observe whether any Work in place should be uncovered for observation, or requires special testing, inspection or approval.

5. *Payment Requests:* Review Applications for Payment with Contractor.

6. *Shop Drawings and Samples:*

    a. Record date of receipt of Samples and Contractor-approved Shop Drawings.

    b. Receive Samples which are furnished at the Site by Contractor and notify Engineer of availability of Samples for examination.

    c. Advise Engineer and Contractor of the commencement of any portion of the Work requiring a Shop Drawing or Sample submittal for which RPR believes that the submittal has not been approved by Engineer.

6. *Modifications:* Consider and evaluate Contractor's suggestions for modifications in Drawings or Specifications and report such suggestions, together with RPR's recommendations, if any, to Engineer. Transmit to Contractor in writing decisions as issued by Engineer.

7. *Inspections and Tests and System Start-ups:*

    a. Observe Contractor-arranged inspections required by Laws and Regulations, including but not limited to those performed by public or other agencies having jurisdiction over the Work.

    b. Accompany visiting inspectors representing public or other agencies having jurisdiction over the Work.

    c. Verify that tests, equipment, and systems start-ups and operating and maintenance training are conducted in the presence of appropriate Owner's personnel, and that Contractor maintains adequate records thereof.

8. *Certificates, Operation and Maintenance Manuals:* During the course of the Work, verify that materials and equipment certificates, operation and maintenance manuals and other data required by the Contract Documents to be assembled and furnished by Contractor are applicable to the items actually installed and in accordance with the Contract Documents, and have these documents delivered to Engineer for review and forwarding to Owner prior to payment for that part of the Work.

9. *Payment Requests:* Review applications for payment with Contractor for compliance with the established procedure for their submission and forward with recommendations to Engineer, noting particularly the relationship of the payment requested to the Schedule of Values, Work completed, and materials and equipment delivered at the Site but not incorporated in the Work.

10. *Reports:*

Copyright© 2018 National Society of Professional Engineers, American Council of Engineering Companies, and American Society of Civil Engineers. All rights reserved.

a. Furnish to Engineer periodic reports as required of progress of the Work and of Contractor's compliance with the Progress Schedule and schedule of Shop Drawing and Sample submittals.

b. Draft and recommend to Engineer proposed Change Orders, Work Change Directives, and Field Orders. Obtain backup material from Contractor.

c. Immediately notify Engineer of the occurrence of any Site accidents, emergencies, acts of God endangering the Work, force majeure or delay events, damage to property by fire or other causes, or the discovery of any Constituent of Concern or Hazardous Environmental Condition.

11. *Completion*

a. Participate in Engineer's visits regarding Substantial Completion.

b. Assist in the preparation of a punch list of items to be completed or corrected.

c. Participate in Engineer's visit to the Site in the company of Owner and Contractor regarding completion of the Work, and prepare a final punch list of items to be completed or corrected by Contractor.

d. Observe whether items on the final punch list have been completed or corrected.

D. The RPR will not:

1. Authorize any deviation from the Contract Documents or substitution of materials or equipment (including "or-equal" items).

2. Exceed limitations of Engineer's authority as set forth in the Contract Documents.

3. Undertake any of the responsibilities of Contractor, Subcontractors, or Suppliers.

4. Advise on, issue directions relative to, or assume control over any aspect of the means, methods, techniques, sequences or procedures of construction.

5 Advise on, issue directions regarding, or assume control over security or safety practices, precautions, and programs in connection with the activities or operations of Owner or Contractor.

6. Participate in specialized field or laboratory tests or inspections conducted off-site by others except as specifically authorized by Engineer.

7. Accept Shop Drawing or Sample submittals from anyone other than Contractor.

8. Authorize Owner to occupy the Project in whole or in part.

ARTICLE 11—CHANGES TO THE CONTRACT

SC-11.02.C Add new paragraph immediately after Paragraph 11.02B:

C. The Engineer or Owner shall contact the Agency for concurrence on each Change Order prior to issuance. All Contract Change Orders must be concurred on (signed) by Agency before they are effective.

SC-11.03.A. Add new Paragraph 11.03.A.2 immediately after Paragraph 11.03.A, which shall be renamed Paragraph 11.03.A.1:

Copyright© 2018 National Society of Professional Engineers, American Council of Engineering Companies, and American Society of Civil Engineers. All rights reserved.

2. The Engineer or Owner shall contact the Agency for concurrence on each Work Change Directive prior to issuance. Once authorized by Owner, a copy of each Work Change Directive shall be provided by Engineer to the Agency.

SC-11.05.B. Add the following at the end of this paragraph:

For Owner-authorized changes in the Work, the Contractor will provide the Manufacturer's Certification, or waiver, for materials subject to Domestic Preference requirements except when sole-source is specified, in which case the Engineer will provide the Manufacturer's Certification, or waiver.

SC-11.09.B.2.c Add new paragraph immediately after Paragraph 11.09.B.2.b:

c. For change orders involving materials subject to Domestic Preference requirements, Contractor shall include a Manufacturer's Certification or waiver, as applicable. Refer to the Sample Language for Manufacturer's Certification provided in these Contract Documents.

SC-12.01.H Add new paragraph immediately after Paragraph 12.01G:

H. *Claims for COVID-19 Pandemic Related Extra Costs*: The Contractor shall have no claims against the City and Borough of Wrangell for extra costs directly or indirectly resulting from the COVID-19 pandemic.

ARTICLE 12—COST OF WORK; ALLOWANCES, UNIT PRICE WORK

13.01 *Cost of the Work*

SC-13.01 Supplement Paragraph 13.01.B.5.c.(1) by adding the following sentence:

Transportation, loading and assembly costs will not be included for equipment already on the site which is being used for other portions of the Work. Hourly equipment and machinery rates shall be calculated from the Rental Rate Blue Book for Construction Equipment, and the equipment list submitted according to Paragraph 2.03 and 2.05 and as follows.

SC-13.01 Supplement Paragraph 13.01.B.5.c.(2) by adding the following sentences:

The equipment rental rate book that governs the included costs for the rental of machinery and equipment owned by Contractor (or a related entity) under the Cost of the Work provisions of this Contract is the most current edition of **Rental Rate Blue Book for Construction Equipment and to Paragraph 2.03 and 2.05 and as follows:**

1) **For working equipment, the hourly rate shall be the monthly rental rate divided by 176 hours per month plus the hourly operating cost.**

2) **For equipment on standby, the hourly rate shall be 50% of the monthly rental rate divided by 176 hours per month and the hourly operating cost shall not be applied.**

3) **For specialized equipment rented for a short duration used for change order work or additional work not part of the scope of the Work bid, the**

Copyright© 2018 National Society of Professional Engineers, American Council of Engineering Companies, and American Society of Civil Engineers. All rights reserved.

equipment rental rate will be in accordance with the terms of a third-party rental agreement or shall be negotiated prior to the work being performed.

SC-13.01 Supplement Paragraph 13.01.C.2 by adding the following definition of small tools and hand tools:

a. For purposes of this paragraph, "small tools and hand tools" means any tool or equipment whose current price if it were purchased new at retail would be less than $500.

SC-13.02.C Delete paragraph in its entirety and insert "Deleted".

13.03 *Unit Price Work*

SC-13.03 Delete Paragraph 13.03.E in its entirety and replace with SC 13.03.E as shown in the EJCDC C800 Supplementary Conditions.

SC-14.03.G Add new paragraph immediately after Paragraph 14.03.F:

G. Installation of materials that are non-compliant with Domestic Preference requirements shall be considered defective work. Contractor should ensure that Engineer has an approved Manufacturer's Certification, or waiver, prior to any domestic preference compliant item being delivered to the project site.

ARTICLE 13—PAYMENTS TO CONTRACTOR, SET OFFS; COMPLETIONS; CORRECTION PERIOD

15.01 *Progress Payments*

SC-15.01.B.2 Add the following language at the end of paragraph:

Payment for materials in storage shall be based on the actual cost of the materials and equipment to Contactor and shall not include any overhead or profit. Documentation warranting Owner has received the materials and equipment free and clear of all Liens will be waived for the material in storage included in the first progress payment. However, proof of payment and clear title must be submitted with Application No. 2 for all material included in Application No. 1. Without such documentation amounts paid per Application No. 1 for materials in storage will be deducted from Application No 2. Beginning with the second application, all payment for materials in storage will require documentation warranting that Owner is receiving the materials free and clear of all liens.

SC-15.01.B.4 Add the following language at the end of paragraph:

Retainage may be used by Owner to offset costs for any of the losses enumerated in Paragraphs 15.01.C.6.a through 15.01.C.6.e inclusive, 15.01.E.1.a through 15.01.E.1.l inclusive or 16.02.E. In addition, retainage may be used by the Owner to protect against loss from failure of the Contractor to complete necessary work and to offset any liquidated damages due Owner.

No payments will be made that would deplete the retainage, place in escrow any funds that are required for retainage or invest the retainage for the benefit of the Contractor.

SC-15.01.B.5 Add new paragraph immediately after Paragraph 15.01.B.4:

5. The Application for Payment form to be used on this Project is EJCDC® C-620. The Agency must approve all Applications for Payment before payment is made.

Copyright© 2018 National Society of Professional Engineers, American Council of Engineering Companies, and American Society of Civil Engineers. All rights reserved.

SC-15.01.B.6 Add new paragraph immediately after Paragraph 15.01.B.5:

6. By submitting an Application for Payment, based in whole or in part on furnishing equipment or materials, Contractor certifies that such equipment and materials are compliant with Domestic Preference requirements. Manufacturer's Certification for material(s) satisfy these requirements. Refer to the Sample Language for Manufacturer's Certification provided in these Contract Documents.

SC-15.01.C.2.d Add the following new paragraph immediately after Paragraph 15.01.C.2.c:

d. The materials presented for payment in an Application for Payment comply with Domestic Preference requirements.

SC-15.01.D.1 Delete paragraph in its entirety and insert the following in its place:

The Application for Payment with Engineer's recommendations will be presented to the Owner and Agency for consideration. If both the Owner and Agency find the Application for Payment acceptable, the recommended amount less any reduction under the provisions of Paragraph 15.01.E will become due twenty (20) days after the Application for Payment is presented to the Owner, and the Owner will make payment to the Contractor.

SC-15.02.A Amend paragraph by striking out the following text: "7 days after".

15.03 *Substantial Completion*

SC-15.03.A Modify paragraph by adding the following after the last sentence:

Contractor shall also submit the Contractor's Certification of Compliance certifying that to the best of the Contractor's knowledge and belief all Iron and Steel products, Manufactured Products, and Construction Materials proposed in the Shop Drawings, Change Orders, and Partial Payment Estimates, and those installed for the Project, comply with Domestic Preference requirements.

SC-15.03 Add the following language at the after Engineer in the second sentence of Paragraph 15.03.B:

or Owner

SC-15.03 Add the following new subparagraph to Paragraph 15.03.B:

Contractor shall immediately correct the deficiencies and re-notify the Engineer in writing that the Work is substantially complete.

ARTICLE 14—SUSPENSION OF WORK AND TERMINATION

No suggested Supplementary Conditions in this Article.

ARTICLE 17—FINAL RESOLUTIONS OF DISPUTES

17.02 *Arbitration*

SC-17.02 Add the following new paragraph immediately after Paragraph 17.01.

17.02 *Arbitration*

A. All matters subject to final resolution under this Article will be settled by arbitration administered by the American Arbitration Association in accordance with its Construction

Copyright© 2018 National Society of Professional Engineers, American Council of Engineering Companies, and American Society of Civil Engineers. All rights reserved.

Industry Arbitration Rules (subject to the conditions and limitations of this Paragraph SC-17.02). Any controversy or claim in the amount of $100,000 or less will be settled in accordance with the American Arbitration Association's supplemental rules for Fixed Time and Cost Construction Arbitration. This agreement to arbitrate will be specifically enforceable under the prevailing law of any court having jurisdiction.

B. The demand for arbitration will be filed in writing with the other party to the Contract and with the selected arbitration administrator, and a copy will be sent to Engineer for information. The demand for arbitration will be made within the specific time required in Article 17, or if no specified time is applicable within a reasonable time after the matter in question has arisen, and in no event will any such demand be made after the date when institution of legal or equitable proceedings based on such matter in question would be barred by the applicable statute of limitations.

C. The arbitrator(s) must be licensed engineers, contractors, attorneys, or construction managers. Hearings will take place pursuant to the standard procedures of the Construction Arbitration Rules that contemplate in-person hearings. The arbitrators will have no authority to award punitive or other damages not measured by the prevailing party's actual damages, except as may be required by statute or the Contract. Any award in an arbitration initiated under this clause will be limited to monetary damages and include no injunction or direction to any party other than the direction to pay a monetary amount.

D. The Arbitrators will have the authority to allocate the costs of the arbitration process among the parties, but will only have the authority to allocate attorneys' fees if a specific Law or Regulation or this Contract permits them to do so.

E. The award of the arbitrators must be accompanied by a reasoned written opinion and a concise breakdown of the award. The written opinion will cite the Contract provisions deemed applicable and relied on in making the award.

F. The parties agree that failure or refusal of a party to pay its required share of the deposits for arbitrator compensation or administrative charges will constitute a waiver by that party to present evidence or cross-examine witness. In such event, the other party shall be required to present evidence and legal argument as the arbitrator(s) may require for the making of an award. Such waiver will not allow for a default judgment against the non-paying party in the absence of evidence presented as provided for above.

G. No arbitration arising out of or relating to the Contract will include by consolidation, joinder, or in any other manner any other individual or entity (including Engineer, and Engineer's consultants and the officers, directors, partners, agents, employees or consultants of any of them) who is not a party to this Contract unless:

1. the inclusion of such other individual or entity will allow complete relief to be afforded among those who are already parties to the arbitration;

2. such other individual or entity is substantially involved in a question of law or fact which is common to those who are already parties to the arbitration, and which will arise in such proceedings;

3. such other individual or entity is subject to arbitration under a contract with either Owner or Contractor, or consents to being joined in the arbitration; and

Copyright© 2018 National Society of Professional Engineers, American Council of Engineering Companies, and American Society of Civil Engineers. All rights reserved.

4. the consolidation or joinder is in compliance with the arbitration administrator's procedural rules.

H. The award will be final. Judgment may be entered upon it in any court having jurisdiction thereof, and it will not be subject to modification or appeal, subject to provisions of the Laws and Regulations relating to vacating or modifying an arbitral award.

I. Except as may be required by Laws or Regulations, neither party nor an arbitrator may disclose the existence, content, or results of any arbitration hereunder without the prior written consent of both parties, with the exception of any disclosure required by Laws and Regulations or the Contract. To the extent any disclosure is allowed pursuant to the exception, the disclosure must be strictly and narrowly limited to maintain confidentiality to the extent possible.

J. The fees and expenses of the arbitrators and any arbitration service shall be shared equally by Owner and Contractor.

ARTICLE 18—~~MISCELLANEOUS~~

~~SC-18.11 – Add new paragraph immediately after Paragraph 18.10:~~

~~18.11 *Tribal Sovereignty*~~

~~A. No provision of this Agreement will be construed by any of the signatories as abridging or debilitating any sovereign powers of the *[insert name of Tribe]*; affecting the trust-beneficiary relationship between the Secretary of the Interior, Tribe, and Indian landowner(s); or interfering with the government-to-government relationship between the United States and the Tribe.~~

SC-19 – Add the following new Article 19 immediately after Article 18:

ARTICLE 19— FEDERAL REQUIREMENTS

19.01 *Agency Not a Party*

A. This Contract is expected to be funded in part with funds provided by Agency. Neither Agency, nor any of its departments, entities, or employees, is a party to this Contract.

19.02 *Contract Approval*

A. Owner and Contractor will furnish Owner's attorney such evidence as required so that Owner's attorney can complete and execute the "Certificate of Owner's Attorney" (Exhibit G of this Bulletin) before Owner submits the executed Contract Documents to Agency for approval.

B. Agency concurrence is required on both the Bid and the Contract before the Contract is effective.

19.03 *Conflict of Interest*

A. Contractor may not knowingly contract with a Supplier or Manufacturer if the individual or entity who prepared the Drawings and Specifications has a corporate or

Copyright© 2018 National Society of Professional Engineers, American Council of Engineering Companies, and American Society of Civil Engineers. All rights reserved.

financial affiliation with the Supplier or Manufacturer. Owner's officers, employees, or agents shall not engage in the award or administration of this Contract if a conflict of interest, real or apparent, would be involved. Such a conflict would arise when: (i) the employee, officer or agent; (ii) any member of their immediate family; (iii) their partner or (iv) an organization that employs, or is about to employ, any of the above, has a financial interest or other interest in or a tangible personal benefit from the Contractor. Owner's officers, employees, or agents shall neither solicit nor accept gratuities, favors or anything of monetary value from Contractor or subcontractors.

19.04 ***Gratuities***

A. If Owner finds after a notice and hearing that Contractor, or any of Contractor's agents or representatives, offered or gave gratuities (in the form of entertainment, gifts, or otherwise) to any official, employee, or agent of Owner or Agency in an attempt to secure this Contract or favorable treatment in awarding, amending, or making any determinations related to the performance of this Contract, Owner may, by written notice to Contractor, terminate this Contract. Owner may also pursue other rights and remedies that the law or this Contract provides. However, the existence of the facts on which Owner bases such findings shall be an issue and may be reviewed in proceedings under the dispute resolution provisions of this Contract.

B. In the event this Contract is terminated as provided in paragraph 19.04.A, Owner may pursue the same remedies against Contractor as it could pursue in the event of a breach of this Contract by Contractor. As a penalty, in addition to any other damages to which it may be entitled by law, Owner may pursue exemplary damages in an amount (as determined by Owner) which shall not be less than three nor more than ten times the costs Contractor incurs in providing any such gratuities to any such officer or employee.

19.05 ***Small, Minority and Women's Businesses***

A. If Contractor intends to let any subcontracts for a portion of the work, Contractor will take all necessary affirmative steps to assure that minority businesses, women's business enterprises, and labor surplus area firms are used when possible. Affirmative steps will include:

1. **Placing qualified small and minority businesses and women's business enterprises on solicitation lists;**
2. **Assuring that small and minority businesses, and women's business enterprises are solicited whenever they are potential sources;**
3. **Dividing total requirements, when economically feasible, into smaller tasks or quantities to permit maximum participation by small and minority businesses, and women's business enterprises;**
4. **Establishing delivery schedules, where the requirement permits, which encourage participation by small and minority businesses, and women's business enterprises;**
5. **Using the services and assistance, as appropriate, of such organizations as the Small Business Administration and the Minority Business Development Agency of the Department of Commerce.**

Copyright© 2018 National Society of Professional Engineers, American Council of Engineering Companies, and American Society of Civil Engineers. All rights reserved.

19.06 ***Anti-Kickback***

A. Contractor shall comply with the Copeland Anti-Kickback Act (40 USC 3145) as supplemented by Department of Labor regulations (29 CFR Part 3, "Contractors and Subcontractors on Public Buildings or Public Works Financed in Whole or in Part by Loans or Grants of the United States"). The Act provides that Contractor or subcontractor shall be prohibited from inducing, by any means, any person employed in the construction, completion, or repair of public facilities, to give up any part of the compensation to which they are otherwise entitled. Owner shall report all suspected or reported violations to Agency.

19.07 ***Clean Air Act (42 U.S.C. 7401-7671q.) and the Federal Water Pollution Control Act (33 U.S.C. 1251-1387), as amended***

A. Contractor to agree to comply with all applicable standards, orders or regulations issued pursuant to the Clean Air Act (42 U.S.C. 7401-7671q) and the Federal Water Pollution Control Act as amended (33 U.S.C. 1251-1387). Violations must be reported to the federal awarding agency and the Regional Office of the Environmental Protection Agency (EPA).

19.08 ***Equal Employment Opportunity***

A. The Contract is considered a federally assisted construction contract. Except as otherwise provided under 41 CFR Part 60, all contracts that meet the definition of "federally assisted construction contract" in 41 CFR Part 60-1.3 must include the equal opportunity clause provided under 41 CFR 60-1.4(b), in accordance with Executive Order 11246, "Equal Employment Opportunity" (30 FR 12319, 12935, 3 CFR Part, 1964-1965 Comp., p. 339), as amended by Executive Order 11375, "Amending Executive Order 11246 Relating to Equal Employment Opportunity," and implementing regulations at 41 CFR part 60, "Office of Federal Contract Compliance Programs, Equal Employment Opportunity, Department of Labor."

19.09 ***Byrd Anti-Lobbying Amendment (31 U.S.C. 1352)***

A. Contractors that apply or bid for an award exceeding $100,000 must file the required certification (RD Instruction 1940-Q Exhibit A-1). The Contractor certifies to the Owner and every subcontractor certifies to the Contractor that it will not and has not used federal appropriated funds to pay any person or organization for influencing or attempting to influence an officer or employee of any agency, a member of Congress, officer or employee of Congress, or an employee of a member of Congress in connection with obtaining the Contract if it is covered by 31 U.S.C. 1352. The Contractor and every subcontractor must also disclose any lobbying with non-federal funds that takes place in connection with obtaining any federal award. Such disclosures are forwarded from tier to tier up to the Owner. Necessary certification and disclosure forms shall be provided by Owner.

B. Contractors shall complete CD-512 Lobbying Restriction Form.

Copyright© 2018 National Society of Professional Engineers, American Council of Engineering Companies, and American Society of Civil Engineers. All rights reserved.

19.10 Environmental Requirements

A. When constructing a Project involving trenching and/or other related earth excavations, Contractor shall comply with the following environmental conditions:

1. **Wetlands – When disposing of excess, spoil, or other Construction Materials on public or private property, Contractor shall not fill in or otherwise convert wetlands.**
2. **Floodplains – When disposing of excess, spoil, or other Construction Materials on public or private property, Contractor shall not fill in or otherwise convert 100-year floodplain areas (Standard Flood Hazard Area) delineated on the latest Federal Emergency Management Agency Floodplain Maps, or other appropriate maps, e.g., alluvial soils on NRCS Soil Survey Maps.**
3. **Historic Preservation - Applicants shall ensure that Contractors maintain a copy of the following inadvertent discovery plan onsite for review:**

   a. If during the course of any ground disturbance related to any Project, any post review discovery, including but not limited to, any artifacts, foundations, or other indications of past human occupation of the area are uncovered, shall be protected by complying with 36 CFR § 800.13(b)(3) and (c) and shall include the following:

   i. All Work, including vehicular traffic, shall immediately stop within a 50 ft. radius around the area of discovery. The Contractor shall ensure barriers are established to protect the area of discovery and notify the Engineer to contact the appropriate RD personnel. The Engineer shall engage a Secretary of the Interior (SOI) qualified professional archeologist to quickly assess the nature and scope of the discovery; implement interim measures to protect the discovery from looting and vandalism; and establish broader barriers if further historic and/or precontact properties, can reasonably be expected to occur.

   ii. The RD personnel shall notify the appropriate RD environmental staff member, the Federal Preservation Officer (FPO), and State Historic Preservation Office (SHPO) immediately. Indian tribe(s) or Native Hawaiian Organization (NHOs) that have an interest in the area of discovery shall be contacted immediately. The SHPO may require additional tribes or NHOs who may have an interest in the area of discovery also be contacted. The notification shall include an assessment of the discovery provided by the SOI qualified professional archaeologist.

   iii. When the discovery contains burial sites or human remains, the Contractor shall immediately notify the appropriate RD personnel who will contact the RD environmental staff member, FPO, and the SHPO. The relevant law enforcement authorities shall be immediately contacted by onsite personnel to reduce delay times, in accordance with tribal, state, or local laws including 36 CFR Part 800.13; 43 CFR Part 10, Subpart B; and the Advisory Council on Historic Preservation's Policy Statement Regarding treatment of Burial Sites, Human Remains, or Funerary Objects (February 23, 2007).

   Iv. When the discovery contains burial sites or human remains, all construction activities, including vehicular traffic shall stop within a 100 ft. radius of the

Copyright© 2018 National Society of Professional Engineers, American Council of Engineering Companies, and American Society of Civil Engineers. All rights reserved.

discovery and barriers shall be established. The evaluation of human remains shall be conducted at the site of discovery by a SOI qualified professional. Remains that have been removed from their primary context and where that context may be in question may be retained in a secure location, pending further decisions on treatment and disposition. RD may expand this radius based on the SOI professional's assessment of the discovery and establish broader barriers if further subsurface burial sites, or human remains can reasonably be expected to occur. RD, in consultation with the SHPO and interested tribes or NHOs, shall develop a plan for the treatment of native human remains.

v. Work may continue in other areas of the undertaking where no historic properties, burial sites, or human remains are present. If the inadvertent discovery appears to be a consequence of illegal activity such as looting, the onsite personnel shall contact the appropriate legal authorities immediately if the landowner has not already done so.

vi. Work may not resume in the area of the discovery until a notice to proceed has been issued by RD. RD shall not issue the notice to proceed until it has determined that the appropriate local protocols and consulting parties have been consulted.

vii. Inadvertent discoveries on federal and tribal land shall follow the processes required by the federal or tribal entity.

4. **Endangered Species – Contractor shall comply with the Endangered Species Act, which provides for the protection of endangered and/or threatened species and critical habitat. Should any evidence of the presence of endangered and/or threatened species or their critical habitat be brought to the attention of Contractor, Contractor will immediately report this evidence to Owner and a representative of Agency. Construction shall be temporarily halted pending the notification process and further directions issued by Agency after consultation with the U.S. Fish and Wildlife Service.**

5. **Mitigation Measures – The following environmental mitigation measures are required on this Project: *[Insert mitigation measures from the Letter of Conditions here]*.**

19.11 *Contract Work Hours and Safety Standards Act (40 U.S.C. 3701-3708)*

A. **Where applicable, for contracts awarded by the Owner in excess of $100,000 that involve the employment of mechanics or laborers, the Contractor will comply with 40 U.S.C. 3702 and 3704, as supplemented by Department of Labor regulations (29 CFR Part 5). Under 40 U.S.C. 3702 of the Act, the Contractor will compute the wages of every mechanic and laborer on the basis of a standard work week of 40 hours. Work in excess of the standard work week is permissible provided that the worker is compensated at a rate of not less than one and a half times the basic rate of pay for all hours worked in excess of 40 hours in the work week. The requirements of 40 U.S.C. 3704 are applicable to construction work and provide that no laborer or mechanic will be required to work in surroundings or under working conditions which are unsanitary, hazardous or dangerous. These requirements do not apply to the**

Copyright© 2018 National Society of Professional Engineers, American Council of Engineering Companies, and American Society of Civil Engineers. All rights reserved.

purchases of supplies or materials or articles ordinarily available on the open market, or contracts for transportation or transmission of intelligence.

19.12 ***Debarment and Suspension (Executive Orders 12549 and 12689)***

A. A contract award (see 2 CFR 180.220) must not be made to parties listed on the governmentwide exclusions in the System for Award Management (SAM), in accordance with the OMB guidelines at 2 CFR 180 that implement Executive Orders 12549 (3 CFR part 1986 Comp., p. 189) and 12689 (3 CFR part 1989 Comp., p. 235), "Debarment and Suspension." SAM Exclusions contains the names of parties debarred, suspended, or otherwise excluded by agencies, as well as parties declared ineligible under statutory or regulatory authority other than Executive Order 12549.

19.13 ***Procurement of recovered materials***

A. The Contractor will comply with 2 CFR Part 200.322, "Procurement of recovered materials."

19.14 ***Domestic Preference and Build America, Buy America Act***

A. Build America, Buy America Act (BABAA). All Iron and Steel Products, Manufactured Products, and Construction Materials used in this project must comply with the Build America, Buy America Act (BABAA) requirements mandated by Title IX of the Infrastructure Investment and Jobs Act (IIJA), Pub. L. 117-58, §§ 70901-70953.

B. The following waivers apply to this Contract:

1. **BABAA *De Minimis*, Small Grants and Minor Components**

Copyright© 2018 National Society of Professional Engineers, American Council of Engineering Companies, and American Society of Civil Engineers. All rights reserved.

SECTION 00830 - ALASKA LABOR STANDARDS, REPORTING, AND PREVAILING WAGE RATE DETERMINATION

State of Alaska, Department of Labor, Laborers' and Mechanics' Minimum Rates of Pay, AS 36.05.010 and AS 36.05.050, Wage and Hour Administration Pamphlet No. 600, the latest edition published by the State of Alaska, Department of Labor inclusive, are made a part of this contract by reference.

The CONTRACTOR is responsible for contacting the Alaska Department of Labor to determine compliance with current regulations.

Required Reporting During Contract (to be provided by every CONTRACTOR and Subcontractor):

A. **Certified Payrolls must be submitted every week, for the previous week. Before each Friday,** each CONTRACTOR and Subcontractor must file Certified Payrolls with Statements of Compliance for the previous week. If there was no activity for that pay period, indicate "No Activity." Indicate "Start" on your first payroll, and "Final" on your last payroll for this Project. Send to:

Wage and Hour Section Labor Law Compliance Division Alaska Department of Labor P.O. Box 020630 Juneau, AK 99802-0630 (907) 465-4842	and	***Project Manager*** City & Borough of Wrangell P.O. Box 531 Wrangell, AK 99929 (907) 874-3902

B. **Within 10 Days of "Notice of Award/Notice to Proceed"** make a list of **all** Subcontractors. Include their name, address, phone, estimated subcontract amount, and estimated start and finish dates. Send to:

Borough Clerk City & Borough of Wrangell P.O. Box 531 Wrangell, AK 99929 (907) 874-2381	and	***Wage and Hour Section*** Labor Law Compliance Division Alaska Department of Labor P.O. Box 020630 Juneau, AK 99802-0630 (907) 465-4839/4842

C. As part of the **final payment request package:**

A completed Compliance Certificate and Release form (provided in Section 01700 - Project Closeout) from every CONTRACTOR and Subcontractor.

A final Subcontractor list complete with final subcontract amounts and including all equipment rentals (with operators).

A Completion of Public Project form from the Alaska Department of Labor.

END OF SECTION

SECTION 00840 – FEDERAL LABOR STANDARDS, REPORTING, AND PREVAILING WAGE RATE DETERMINATION

A. The Federal Labor Standards Provisions are included in this Contract pursuant to the provisions applicable to project associated Federal assistance. The Contractor and all Subcontractors are required to comply with the Federal Labor Standards Provisions for weekly certified payroll submission.

B. The Federal General Decision Number is: AK20230001 issued May 19, 2023.

C. If a higher State of Alaska wage rate is required for a particular classification, the higher rate must be paid. Reporting requirements may differ between the Federal and State requirements.

D. **Within 15 Days after Notice of Intent to Award,** the CONTRACTOR must compile and submit a list of all Subcontractors and material suppliers, showing all tiers. For each company listed include name, address, phone, employer tax number; DBE status if any; estimated subcontract amount; estimated start and finish dates; and copies of bid tabulations with firm name and number. Send the list to Addresses B and C.

E. Before each Friday, the CONTRACTOR and each Subcontractor must file:

1. Certified Payrolls with Statements of Compliance for the previous week. If there was no activity for that week, indicate "No Activity." Indicate "Start" on your first payroll, and "Final" on your last payroll for this project. Send the original to Address B and a complete copy to Address A.

F. Preparing the final payment request, the CONTRACTOR must verify that the subcontractor list is up-to-date and includes all parties submitting certified payrolls. Send a copy of amended lists to Addresses A and B. Submit completed Compliance Certification and Release for the Prime Contractor and each Subcontractor to Address A.

Address A	***Address B***
Amber Al-Haddad City and Borough of Wrangell P.O. BOX 531 Wrangell, AK 99929 (907) 874-3902	Wage and Hour Section Labor Standards & Alaska Dept. of Labor P.O. Box 020630 Juneau, AK 99802-0630 (907) 465-4839

END OF SECTION

Back

CERTIFICATION REGARDING LOBBYING

(This Certification is required pursuant to 31 U.S.C. 1352)

Certification for Contracts, Grants, Loans, and Cooperative Agreements

The undersigned certifies, to the best of his or her knowledge and belief, that:

(1) No Federal appropriated funds have been paid or will be paid, by or on behalf of the undersigned, to any person for influencing or attempting to influence an officer or employee of any agency, a Member of Congress, an officer or employee of Congress, or an employee of a Member of Congress in connection with the awarding of any Federal contract, the making of any Federal grant, the making of any Federal loan, the entering into of any cooperative agreement, and the extension, continuation, renewal, amendment, or modification of any Federal contract, grant, loan, or cooperative agreement.

(2) If any funds other than Federal appropriated funds have been paid or will be paid to any person for influencing or attempting to influence an officer or employee of any agency, a Member of Congress, an officer or employee of Congress, or an employee of a Member of Congress in connection with this Federal contract, grant, loan, or cooperative agreement, the undersigned shall complete and submit Standard Form LLL, "Disclosure of Lobbying Activities," in accordance with its instructions.

(3) The undersigned shall require that the language of this certification be included in the award documents for all subawards at all tiers (including subcontracts, subgrants, and contracts under grants, loans, and cooperative agreements) and that all subrecipients shall certify and disclose accordingly.

This certification is a material representation of fact upon which reliance was placed when this transaction was made or entered into. Submission of this certification is a prerequisite for making or entering into this transaction imposed by Section 1352, Title 31, U.S. Code. Any person who fails to file the required certification shall be subject to a civil penalty of not less than $11,000 and not more than $110,000 for each such failure.

Please check appropriate box:

☐ No nonfederal funds have been used or are planned to be used for lobbying in connection with this application/award/contract.

or

☐ Attached is Standard Form LLL, "Disclosure of Lobbying Activities," which describes the use (past or planned) of nonfederal funds for lobbying in connection with this application/award/ contract.

Executed this _____ day of _____, 20____

by _____ _____

(Type or Print Name) (Title of Executing Official)

_____ _____

(Signature of Executing Official) (Name of organization/applicant)

CONTRACT CLAUSE
NEW RESTRICTIONS ON LOBBYING

This contract, subcontract, or subgrant is subject to Section 319 of Public Law 101-121, which added section 1352, regarding lobbying restrictions, to Chapter 13 of Title 31 of the United States Code. The new section is explained in the common rule, 15 CFR Part 28 (55 FR 6736-6748, 2/26/90). Each bidder/applicant/recipient of this contract subcontract, or subgrant and subrecipients are generally prohibited from using Federal funds for lobbying the Executive or Legislative Branches of the Federal Government in connection with this Award.

Contract Clause Threshold

This Contract Clause regarding lobbying must be included in each application for a subgrant and in each bid for a contract or subcontract exceeding $100,000 of Federal funds at any tier under the Federal Award.

Certification and Disclosure

Each applicant/recipient of a subgrant and each bidder/applicant/ recipient of a contract or subcontract exceeding $100,000 of Federal funds at any tier under the Federal Award must file a "Certification Regarding Lobbying" and, if applicable, Standard Form LLL, "Disclosure of Lobbying Activities," regarding the use of any nonfederal funds for lobbying. Certifications shall be retained by the next higher tier. All disclosure forms, however, shall be forwarded from tier to tier until received by the Recipient of the Federal Award (grant), who shall forward all disclosure forms to the Federal agency.

Continuing Disclosure Requirement

Each subgrantee, contractor, or subcontractor that is subject to the Certification and Disclosure provision of this Contract Clause is required to file a disclosure form at the end of each calendar quarter in which there occurs any event that requires disclosure or that materially affects the accuracy of the information contained in any disclosure form previously filed by such person. Disclosure forms shall be forwarded from tier to tier until received by the Recipient of the Federal Award (grant) who shall forward all disclosure forms to the Federal agency.

Indian Tribes, Tribal Organizations, or Other Indian Organizations

Indian tribes, tribal organizations, or any other Indian organizations, including the Alaskan Native organizations, are excluded from the above lobbying restrictions and reporting requirements, but only with respect to expenditures that are by such tribes or organizations for lobbying activities permitted by other Federal law. An Indian tribe or organization that is seeking an exclusion from Certification and Disclosure requirements must provide (preferably in an attorney's opinion) EDA with the citation of the provision or provisions of Federal law upon which it relies to conduct lobbying activities that would otherwise be subject to the prohibitions in and to the Certification and Disclosure requirements of Section 319 of Public Law No. 101-121. Note, also, that a non-Indian subgrantee, contractor, or subcontractor under an award (grant) to an Indian tribe, for example, is subject to the restrictions and reporting requirements.

U. S. DEPARTMENT OF COMMERCE
ECONOMIC DEVELOPMENT ADMINISTRATION

EDA CONTRACTING PROVISIONS
FOR CONSTRUCTION PROJECTS

These EDA Contracting Provisions for Construction Projects (EDA Contracting Provisions) are intended for use by recipients receiving federal assistance from the U. S. Department of Commerce - Economic Development Administration (EDA). They contain provisions specific to EDA and other federal provisions not normally found in non-federal contract documents. The requirements contained herein must be incorporated into all construction contracts and subcontracts funded wholly or in part with federal assistance from EDA.

TABLE OF CONTENTS

1. Definitions
2. Applicability
3. Federally Required Contract Provisions
4. Required Provisions Deemed Inserted
5. Inspection by EDA Representatives
6. Examination and Retention of Contractor's Records
7. Construction Schedule and Periodic Estimates
8. Contractor's Title to Material
9. Inspection and Testing of Materials
10. "OR EQUAL" Clause
11. Patent Fees and Royalties
12. Claims for Extra Costs
13. Contractor's and Subcontractor's Insurance
14. Contract Security Bonds
15. Labor Standards - Davis-Bacon and Related Acts
16. Labor Standards - Contract Work Hours and Safety Standards Act
17. Equal Employment Opportunity
18. Contracting with Small, Minority and Women's Businesses
19. Health, Safety and Accident Prevention
20. Conflict of Interest and Other Prohibited Interests
21. New Restrictions on Lobbying
22. Historical and Archaeological Data Preservation
23. Clean Air and Water
24. Use of Lead-Based Paints on Residential Structures
25. Energy Efficiency
26. Environmental Requirements
27. Debarment, Suspension, Ineligibility and Voluntary Exclusions
28. EDA Project Sign

1. DEFINITIONS

Agreement – The written instrument that is evidence of the agreement between the Owner and the Contractor overseeing the Work.

Architect/Engineer - The person or other entity engaged by the Recipient to perform architectural, engineering, design, and other services related to the work as provided for in the contract.

Contract – The entire and integrated written agreement between the Owner and the Contractor concerning the Work. The Contract supersedes prior negotiations, representations, or agreements, whether written or oral.

Contract Documents – Those items so designated in the Agreement. Only printed or hard copies of the items listed in the Agreement are Contract Documents.

Contractor – The individual or entity with whom the Owner has entered into the Agreement.

Drawings or Plans – That part of the Contract Documents prepared or approved by the Architect/Engineer that graphically shows the scope, extent, and character of the Work to be performed by the Contractor.

EDA - The United States of America acting through the Economic Development Administration of the U.S. Department of Commerce or any other person designated to act on its behalf. EDA has agreed to provide financial assistance to the Owner, which includes assistance in financing the Work to be performed under this Contract. Notwithstanding EDA's role, nothing in this Contract shall be construed to create any contractual relationship between the Contractor and EDA.

Owner – The individual or entity with whom the Contractor has entered into the Agreement and for whom the Work is to be performed.

Project – The total construction of which the Work to be performed under the Contract Documents may be the whole, or a part.

Recipient - An entity receiving Federal financial assistance from EDA, including any EDA-approved successor to the entity.

Specifications – That part of the Contract Documents consisting of written requirements for materials, equipment, systems, standards, and workmanship as applied to the Work, and certain administrative requirements and procedural matters applicable thereto.

Subcontractor – An individual or entity having direct contract with the Contractor or with any other Subcontractor for the performance of a part of the Work at the Site.

Work – The entire construction or the various separately identifiable parts thereof required to be provided under the Contract Documents. Work includes and is the result of performing or providing all labor, services, and documentation necessary to produce such construction and furnishing, installing, and incorporating all materials and equipment into such construction, all as required by the Contract Documents.

2. APPLICABILITY

The Project to which the construction work covered by this Contract pertains is being assisted by the United States of America through federal assistance provided by the U.S. Department of Commerce - Economic Development Administration (EDA). Neither EDA, nor any of its departments, entities, or employees is a party to this Contract. The following EDA Contracting Provisions are included in this Contract and all subcontracts or related instruments pursuant to the provisions applicable to such federal assistance from EDA.

3. FEDERALLY REQUIRED CONTRACT PROVISIONS

(a) Administrative, contractual, or legal remedies in instances where contractors violate or breach contract terms, and provide for such sanctions and penalties as may be appropriate (Contracts more than the simplified acquisition threshold - currently fixed at $100,000. *See* 41 U.S.C. 403(11)).

(b) Termination for cause and for convenience by the Recipient including the manner by which it will be effected and the basis for settlement (all contracts in excess of $10,000).

(c) Compliance with Executive Order 11246 of September 24, 1965, *Equal Employment Opportunity*, as amended by Executive Order 11375 of October 13, 1967 and as supplemented by Department of Labor regulations at 41 C.F.R. chapter 60 (applicable to all construction contracts awarded in excess of $10,000 by recipients of federal assistance and their contractors or subrecipients).

(d) Compliance with the Copeland "Anti-Kickback" Act (18 U.S.C. § 874) as supplemented by Department of Labor regulations at 29 C.F.R. part 3 (all contracts and subgrants for construction or repair).

(e) Compliance with the Davis-Bacon Act (40 U.S.C. § 3145) as supplemented by Department of Labor regulations at 29 C.F.R. part 5 (construction contracts in excess of $2,000 awarded by Recipients and subrecipients).

(f) Compliance with sections 103 and 107 of the Contract Work Hours and Safety Standards Act (40 U.S.C. §§ 327-330) as supplemented by Department of Labor regulations at 29 C.F.R. part 5. (construction contracts awarded by Recipients and subrecipients in excess of $2,000, and in excess of $2,500 for other contracts which involve the employment of mechanics or laborers)

(g) EDA requirements and regulations pertaining to reporting.

(h) EDA requirements and regulations pertaining to patent rights with respect to any discovery or invention which arises or is developed in the course of or under such contract.

(i) EDA requirements and regulations pertaining to copyrights and rights in data.

(j) Compliance with all applicable standards, orders, or requirements issued under section 306 of the Clear Air Act (42 U.S.C. § 7606), section 508 of the Clean Water Act (33 U.S.C. § 1368), Executive Order 11738, *Providing for Administration of the Clean Air Act and the Federal Water Pollution Control Act With Respect to Federal Contracts, Grants, or Loans*, and Environmental Protection Agency regulations at 48 C.F.R. part 15 (applicable to contracts, subcontracts, and subgrants of amounts in excess of $ 100,000).

4. REQUIRED PROVISIONS DEEMED INSERTED

Each and every provision of law and clause required by law to be inserted in this contract shall be deemed to be inserted herein and the contract shall be read and enforced as though it were included herein, and if through mistake or otherwise any such provision is not inserted, or is not correctly inserted, then upon the application of either party the contract shall forthwith be physically amended to make such insertion of correction.

5. INSPECTION BY EDA REPRESENTATIVES

The authorized representatives and agents of EDA shall be permitted to inspect all work, materials, payrolls, personnel records, invoices of materials, and other relevant data and records.

6. EXAMINATION AND RETENTION OF CONTRACTOR'S RECORDS

(a) The Owner, EDA, or the Comptroller General of the United States, or any of their duly authorized representatives shall, generally until three years after final payment under this contract, have access to and the right to examine any of the Contractor's directly pertinent books, documents, papers, or other records involving transactions related to this contract for the purpose of making audit, examination, excerpts, and transcriptions.

(b) The Contractor agrees to include in first-tier subcontracts under this contract a clause substantially the same as paragraph (a) above. "Subcontract," as used in this clause, excludes purchase orders that do not exceed $10,000.

(c) The periods of access and examination in paragraphs (a) and (b) above for records relating to (1) appeals under the disputes clause of this contract, (2) litigation or settlement of claims arising from the performance of this contract, or (3) costs and expenses of this contract to which the Owner, EDA, or Comptroller General or any of their duly authorized representatives has taken exception shall continue until disposition of such appeals, litigation, claims, or exceptions.

7. CONSTRUCTION SCHEDULE AND PERIODIC ESTIMATES

Immediately after execution and delivery of the contract, and before the first partial payment is made, the Contractor shall deliver to the Owner an estimated construction progress schedule in a form satisfactory to the Owner, showing the proposed dates of commencement and completion of each of the various subdivisions of work required under the Contract Documents and the anticipated amount of each monthly payment that will become due to the Contractor in accordance with the progress schedule. The Contractor also shall furnish the Owner (a) a detailed estimate giving a complete breakdown of the contract price and (b) periodic itemized estimates of work done for the purpose of making partial payments thereon. The costs employed in making up any of these schedules will be used only to determine the basis of partial payments and will not be considered as fixing a basis for additions to or deductions from the contract price.

8. CONTRACTOR'S TITLE TO MATERIAL

No materials, supplies, or equipment for the work shall be purchased by the Contractor or by any subcontractor that is subject to any chattel mortgage or under a conditional sale contract or other agreement by which an interest is retained by the seller. The Contractor warrants and guarantees that he/she has good title to all work, materials, and equipment used by him/her in the Work, free and clear of all liens, claims, or encumbrances.

9. INSPECTION AND TESTING OF MATERIALS

All materials and equipment used in the completion of the Work shall be subject to adequate inspection and testing in accordance with accepted standards. The laboratory or inspection agency shall be selected by the Owner. Materials of construction, particularly those upon which the strength and durability of any structure may depend, shall be subject to inspection and testing to establish conformance with specifications and suitability for intended uses.

10. "OR EQUAL" CLAUSE

Whenever a material, article, or piece of equipment is identified in the Contract Documents by reference to manufacturers' or vendors' names, trade names, catalogue numbers, etc., it is intended merely to establish a standard. Any material, article, or equipment of other manufacturers and vendors that will perform adequately the duties imposed by the general design will be considered equally acceptable provided the material, article, or equipment so proposed is, in the opinion of the Architect/Engineer, of equal substance and function. However, such substitution material, article, or equipment shall not be purchased or installed by the Contractor without the Architect/Engineer's written approval.

11. PATENT FEES AND ROYALTIES

(a) Contractor shall pay all license fees and royalties and assume all costs incident to the use in the performance of the Work or the incorporation in the Work of any invention, design, process, product, or device that is the subject of patent rights or copyrights held by others. If a particular invention, design, process, product, or device is specified in the Contract Documents for use in

the performance of the Work and if, to the actual knowledge of Owner or Engineer, its use is subject to patent rights or copyrights calling for the payment of any license fee or royalty to others, the existence of such rights shall be disclosed by the Owner in the Contract Documents.

(b) To the fullest extent permitted by Laws and Regulations, the Contractor shall indemnify and hold harmless the Owner and the Architect/Engineer, and the officers, directors, partners, employees, agents, consultants, and subcontractors of each and any of them from and against all claims, costs, losses, and damages (including but not limited to all fees and charges of engineers, architects, attorneys, and other professionals and all court or arbitration or other dispute resolution costs) arising out of or relating to any infringement of patent rights or copyrights incident to the use in the performance of the Work or resulting from the incorporation in the Work of any invention, design, process, product, or device not specified in the Contract Documents.

12. CLAIMS FOR EXTRA COSTS

No claims for extra work or cost shall be allowed unless the same was done in pursuance of a written order from the Architect/Engineer approved by the Owner.

13. CONTRACTORS AND SUBCONTRACTORS INSURANCE

(a) The Contractor shall not commence work under this Contract until the Contractor has obtained all insurance reasonably required by the Owner, nor shall the Contractor allow any subcontractor to commence work on his/her subcontract until the insurance required of the subcontractor has been so obtained and approved.

(b) Types of insurance normally required are:

(1) Workmen's Compensation
(2) Contractor's Public Liability and Property Damage
(3) Contractor's Vehicle Liability
(4) Subcontractors Public Liability, Property Damage and Vehicle Liability
(5) Builder's Risk (Fire and Extended Coverage)

(c) **Scope of Insurance and Special Hazards:** The insurance obtained, which is described above, shall provide adequate protection for the Contractor and his/her subcontractors, respectively, against damage claims that may arise from operations under this contract, whether such operations be by the insured or by anyone directly or indirectly employed by him/her and also against any of the special hazards that may be encountered in the performance of this Contract.

(d) **Proof of Carriage of Insurance:** The Contractor shall furnish the Owner with certificates showing the type, amount, class of operations covered, effective dates, and dates of expiration of applicable insurance policies.

14. CONTRACT SECURITY BONDS

(a) If the amount of this Contract exceeds $100,000, the Contractor shall furnish a performance bond in an amount at least equal to one hundred percent (100%) of the Contract price as security for the faithful performance of this Contract and also a payment bond in an amount equal to one hundred percent (100%) of the Contract price or in a penal sum not less than that prescribed by State, Territorial, or local law, as security for the payment of all persons performing labor on the Work under this Contract and furnishing materials in connection with this Contract. The performance bond and the payment bond may be in one or in separate instruments in accordance with local law. Before final acceptance, each bond must be approved by EDA. If the amount of this Contract does not exceed $100,000, the Owner shall specify the amount of the payment and performance bonds.

(b) All bonds shall be in the form prescribed by the Contract Documents except as otherwise provided in applicable laws or regulations, and shall be executed by such sureties as are named in the current list of *Companies Holding Certificates of Authority as Acceptable Sureties on Federal Bonds and as Acceptable Reinsuring Companies* as published in Treasury Circular 570 (amended) by the Financial Management Service, Surety Bond Branch, U.S. Department of the Treasury. All bonds signed by an agent must be accompanied by a certified copy of the agent's authority to act. Surety companies executing the bonds must also be authorized to transact business in the state where the Work is located.

15. LABOR STANDARDS - DAVIS-BACON AND RELATED ACTS (as required by section 601 of PWEDA)

(a) Minimum Wages

(1) All laborers and mechanics employed or working upon the site of the Work in the construction or development of the Project will be paid unconditionally and not less often than once a week, and without subsequent deduction or rebate on any account (except such payroll deductions as are permitted by regulations issued by the Secretary of Labor under the Copeland Act at 29 C.F.R. part 3, the full amount of wages and bona fide fringe benefits (or cash equivalents thereof) due at the time of payment computed at rates not less than those contained in the wage determination of the Secretary of Labor, which is attached hereto and made a part hereof, regardless of any contractual relationship that may be alleged to exist between the Contractor and such laborers and mechanics. Contributions made or costs reasonably anticipated for bona fide fringe benefits under Section 1(b)(2) of the Davis-Bacon Act on behalf of laborers or mechanics are considered wages paid to such laborers or mechanics, subject to the provisions of 29 C.F.R. § 5.5(a)(1)(iv); also, regular contributions made or costs incurred for more than a weekly period (but not less often than quarterly) under plans, funds, or programs, which cover the particular weekly period, are deemed to be constructively made or incurred during such weekly period. Such laborers and mechanics shall be paid the appropriate wage rate and fringe benefits on the wage determination for the classification of work actually performed, without regard to skill, except as provided in 29 C.F.R. § 5.5(a)(4). Laborers or mechanics performing work in more than one classification may be compensated at the

rate specified for each classification for the time actually worked therein, provided that the employer's payroll records accurately set forth the time spent in each classification in which work is performed. The wage determination (including any additional classification and wage rates determined under 29 C.F.R. § 5.5(a)(1)(ii) and the Davis-Bacon poster (WH-1321) shall be posted at all times by the contractor and its subcontractors at the site of the work in a prominent and accessible place where it can be easily seen by the workers.

(2) (i) Any class of laborers or mechanics to be employed under the Contract, but not listed in the wage determination, shall be classified in conformance with the wage determination. EDA shall approve an additional classification and wage rate and fringe benefits therefore only when the following criteria have been met:

(A) The work to be performed by the classification requested is not performed by a classification in the wage determination;

(B) The classification is utilized in the area by the construction industry; and

(C) The proposed wage rate, including any bona fide fringe benefits, bears a reasonable relationship to the wage rates contained in the wage determination.

(ii) If the Contractor and the laborers and mechanics to be employed in the classification (if known), or their representatives, and EDA or its designee agree on the classification and wage rate (including the amount designated for fringe benefits where appropriate), a report of the action taken shall be sent by EDA or its designee to the Administrator of the Wage and Hour Division, Employment Standards Administration, U.S. Department of Labor, Washington, D.C. 20210.

(iii) In the event the Contractor, the laborers or mechanics to be employed in the classification or their representatives, and EDA or its designee do not agree on the proposed classification and wage rate (including the amount designated for fringe benefits, where appropriate), EDA or its designee shall refer the questions, including the views of all interested parties and the recommendation of EDA or its designee, to the Administrator for determination.

(iv) The wage rate (including fringe benefits where appropriate) determined pursuant to paragraphs (a)(2)(ii) or (iii) of this section, shall be paid to all workers performing work in the classification under this contract from the first day on which work is performed in the classification.

(3) Whenever the minimum wage rate prescribed in the contract for a class of laborers or mechanics includes a fringe benefit which is not expressed as an hourly rate, the Contractor shall either pay the benefit as stated in the wage determination or shall pay another bona fide fringe benefit or an hourly cash equivalent thereof.

(4) If the Contractor does not make payments to a trustee or other third person, the Contractor may consider as part of the wages of any laborer or mechanic the amount of any costs reasonably anticipated in providing bona fide fringe benefits under a plan or program, provided, that the Secretary of Labor has found, upon the written request of the Contractor, that the applicable standards of the Davis-Bacon Act have been met. The Secretary of Labor may require the Contractor to set aside in a separate account assets for the meeting of obligations under the plan or program.

(b) **Withholding**

EDA or its designee shall upon its own action or upon written request of an authorized representative of the Department of Labor withhold or cause to be withheld from the Contractor under this Contract or any other federal contract with the same prime Contractor, or any other federally-assisted contract subject to Davis-Bacon prevailing wage requirements, which is held by the same prime contractor so much of the accrued payments or advances as may be considered necessary to pay laborers and mechanics, including apprentices, trainees and helpers, employed by the Contractor or any subcontractor the full amount of wages required by the Contract. In the event of failure to pay any laborer or mechanic, including any apprentice, trainee or helper employed or working on the site of the Work in the construction or development of the Project, all or part of the wages required by the Contract, EDA or its designee may, after written notice to the Contractor, sponsor, applicant, or owner, take such action as may be necessary to cause the suspension of any further payment, advance, or guarantee of funds until such violations have ceased. EDA or its designee may, after written notice to the Contractor, disburse such amounts withheld for and on account of the Contractor or subcontractor to the respective employees to whom they are due. The Comptroller General shall make such disbursements in the case of direct Davis-Bacon Act contracts.

(c) **Payrolls and basic records**

(1) Payrolls and basic records relating thereto shall be maintained by the Contractor during the course of the Work and preserved for a period of three years thereafter for all laborers and mechanics working at the site of the Work in the construction or development of the Project. Such records shall contain the name, address, and social security number of each such worker, his or her correct classification, hourly rates of wages paid (including rates of contributions or costs anticipated for bona fide fringe benefits or cash equivalents thereof of the types described in section 1(b) (2) (B) of the Davis-Bacon Act), daily and weekly number of hours worked, deductions made and actual wages paid. Whenever the Secretary of Labor has found under 29 C.F.R. § 5.5(a)(1)(iv) that the wages of any laborer or mechanic include the amount of any costs reasonably anticipated in providing benefits under a plan or program described in section 1(b)(2)(B) of the Davis-Bacon Act, the Contractor shall maintain records which show that the commitment to provide such benefits is enforceable, the plan or program is financially responsible, and the plan or program has been communicated in writing to the laborers or mechanics affected, and provide records that show the costs anticipated or the actual cost incurred in providing such benefits. Contractors employing apprentices or trainees under approved programs shall maintain written evidence of the registration of

apprenticeship programs and certification of trainee programs, the registration of the apprentices and trainees, and the ratios and wage rates prescribed in the applicable programs.

(2) (i) For each week in which Contract work is performed, the Contractor shall submit a copy of all payrolls to the Owner for transmission to EDA or its designee. The payrolls submitted shall set out accurately and completely all of the information required to be maintained under 29 C.F.R. part 5.5(a)(3)(i). This information may be submitted in any form desired. Optional Form WH-347 is available for this purpose. It may be purchased from the Superintendent of Documents (Federal Stock Number 029-005-00014-1), U.S. Government Printing Office, Washington, D.C. 20402; or downloaded from the U.S. Department of Labor's website at www.dol.gov/esa/forms/whd/index.htm. The prime Contractor is responsible for the submission of copies of payrolls by all subcontractors

(ii) Each payroll submitted shall be accompanied by a "Statement of Compliance," signed by the Contractor or subcontractor or his or her agent who pays or supervises the payment of the persons employed under the Contract and shall certify the following:

(A) That the payroll for the payroll period contains the information required to be maintained under 29 C.F.R. § 5.5(a)(3)(i) and that such information is correct and complete;

(B) That each laborer or mechanic (including each helper, apprentice, and trainee) employed on the Contract during the payroll period has been paid the full weekly wages earned, without rebate, either directly or indirectly, and that no deductions have been made either directly or indirectly from the full wages earned, other than permissible deductions as set forth in 29 C.F.R. part 3;

(C) That each laborer or mechanic has been paid not less than the applicable wage rates and fringe benefits or cash equivalents for the classification of work performed, as specified in the applicable wage determination incorporated into the Contract.

(iii) The weekly submission of a properly executed certification set forth on the reverse side of Optional Form WH-347 shall satisfy the requirement for submission of the "Statement of Compliance" required by paragraph 14(c)(ii) of this section.

(iv) The falsification of any of the above certifications may subject the Contractor or subcontractor to civil or criminal prosecution under section 1001 of Title 18 and section 231 of Title 31 of the U.S. Code.

(3) The Contractor or subcontractor shall make the records required under paragraph 14(c)(1) of this section available for inspection, copying, or transcription by authorized representatives of EDA or its designee or the Department of Labor, and shall permit such representatives to interview employees during working hours on the job. If the Contractor or subcontractor fails to submit the required records or to make them

available, EDA or its designee may, after written notice to the Contractor or Owner, take such action as may be necessary to cause the suspension of any further payment, advance, or guarantee of funds. Furthermore, failure to submit the required records upon request or to make such records available may be grounds for debarment action pursuant to 29 C.F.R. part 5.12.

(d) **Apprentices and Trainees**.

(1) **Apprentices**. Apprentices will be permitted to work at less than the predetermined rate for the work they performed when they are employed pursuant to and individually registered in a bona fide apprenticeship program registered with the U.S. Department of Labor, Employment and Training Administration, Bureau of Apprenticeship and Training, or with a State Apprenticeship Agency recognized by the Bureau, or if a person is employed in his or her first 90 days of probationary employment as an apprentice in such an apprenticeship program, who is not individually registered in the program, but who has been certified by the Bureau of Apprenticeship and Training or a State Apprenticeship Agency (where appropriate) to be eligible for probationary employment as an apprentice. The allowable ratio of apprentices to journeymen on the job site in any craft classification shall not be greater than the ratio permitted to the Contractor as to the entire work force under the registered program. Any worker listed on a payroll at an apprentice wage rate who is not registered or otherwise employed as stated above, shall be paid not less than the applicable wage rate on the wage determination for the classification of work actually performed. In addition, any apprentice performing work on the job site in excess of the ratio permitted under the registered program shall be paid not less than the applicable wage rate on the wage determination for the work actually performed. Where a Contractor is performing construction on a Project in a locality other than that in which its program is registered, the ratios and wage rates (expressed in percentages of the journeyman's hourly rate) specified in the Contractor's or subcontractor's registered program shall be observed. Every apprentice must be paid at not less than the rate specified in the registered program for the apprentice's level of progress, expressed as a percentage of the journeymen hourly rate specified in the applicable wage determination. Apprentices shall be paid fringe benefits in accordance with the provisions of the apprenticeship program. If the apprenticeship program does not specify fringe benefits, apprentices must be paid the full amount of fringe benefits listed on the wage determination for the applicable classification. If the Administrator determines that a different practice prevails for the applicable apprentice classification, fringes shall be paid in accordance with that determination. In the event the Bureau of Apprenticeship and Training, or a State Apprenticeship Agency recognized by the Bureau, withdraws approval of an apprenticeship program, the Contractor will no longer be permitted to utilize apprentices at less than the applicable predetermined rate for the work performed until an acceptable program is approved.

(2) **Trainees**. Except as provided in 29 C.F.R. § 5.16, trainees will not be permitted to work at less than the predetermined rate for the work performed unless they are employed pursuant to and individually registered in a program that has received prior approval, evidenced by formal certification by the U.S. Department of Labor, Employment and

Training Administration. The ratio of trainees to journeymen on the job site shall not be greater than permitted under the plan approved by the Employment and Training Administration. Every trainee must be paid at not less than the rate specified in the approved program for the trainee's level of progress, expressed as a percentage of the journeyman's hourly rate specified in the applicable wage determination. Trainees shall be paid fringe benefits in accordance with the provisions of the trainee program. If the trainee program does not mention fringe benefits, trainees shall be paid the full amount of fringe benefits listed on the wage determination unless the Administrator of the Wage and Hour Division determines that there is an apprenticeship program associated with the corresponding journeyman wage rate on the wage determination which provides for less than full fringe benefits for apprentices. Any employee listed on the payroll at a trainee rate who is not registered and participating in a training plan approved by the Employment and Training Administration shall be paid not less than the applicable wage rate on the wage determination for the classification of work actually performed. In addition, any trainee performing work on the job site in excess of the ratio permitted under the registered program shall be paid not less than the applicable wage rate on the wage determination for the work actually performed. In the event the Employment and Training Administration withdraws approval of a training program, the Contractor will no longer be permitted to utilize trainees at less than the applicable predetermined rate for the work performed until an acceptable program is approved.

(3) **Equal employment opportunity**. The utilization of apprentices, trainees and journeymen under this part shall be in conformity with the equal employment opportunity requirements of Executive Order 11246, *Equal Employment Opportunity*, as amended, and 29 C.F.R. part 30.

(e) **Compliance with Copeland Anti-Kickback Act Requirements**. The Contractor shall comply with the Copeland Anti-Kickback Act (18 U.S.C. § 874 and 40 U.S.C. § 276(c)) as supplemented by Department of Labor regulations (29 C.F.R. part 3, "Contractors and Subcontractors on Public Buildings or Public Works Financed in Whole or in Part by Loans or Grants of the United States"). The Act provides that the Contractor and any subcontractors shall be prohibited from inducing, by any means, any person employed in the construction, completion, or repair of public facilities, to give up any part of the compensation to which they are otherwise entitled. The Owner shall report all suspected or reported violations to EDA.

(f) **Subcontracts**. The Contractor and any subcontractors will insert in any subcontracts the clauses contained in 29 C.F.R. §§ 5.5(a)(1) through (10) and such other clauses as EDA or its designee may require, and also a clause requiring the subcontractors to include these clauses in any lower tier subcontracts. The prime Contractor shall be responsible for the compliance by any subcontractor or lower tier subcontractor with all the contract clauses in 29 C.F.R. part 5.5.

(g) **Contract termination; debarment**. The breach of the contract clauses in 29 C.F.R. part 5.5 may be grounds for termination of the contract, and for debarment as a Contractor and a subcontractor as provided in 29 C.F.R. § 5.12.

(h) **Compliance with Davis-Bacon and Related Act Requirements**. All rulings and interpretations of the Davis-Bacon and Related Acts contained in 29 C.F.R. parts 1, 3, and 5 are herein incorporated by reference in this contract.

(i) **Disputes concerning labor standards**. Disputes arising out of the labor standards provisions of this Contract shall not be subject to the general disputes clause of this Contract. Such disputes shall be resolved in accordance with the procedures of the Department of Labor set forth in 29 C.F.R. parts 5, 6, and 7. Disputes within the meaning of this clause include disputes between the contractor (or any of its subcontractors) and EDA or its designee, the U.S. Department of Labor, or the employees or their representatives.

(j) **Certification of Eligibility**.

(1)By entering into this Contract, the Contractor certifies that neither it nor any person or firm that has an interest in the Contractor's firm is a person or firm ineligible to be awarded Government contracts by virtue of section 3(a) of the Davis-Bacon Act or 29 C.F.R. § 5.12(a)(1).

(2) No part of this Contract shall be subcontracted to any person or firm ineligible for award of a Government contract by virtue of section 3(a) of the Davis-Bacon Act or 29 C.F.R. § 5.12(a)(1).

(3) The penalty for making false statements is prescribed in the U.S. Criminal Code, 18 U.S.C. § 1001.

16. **LABOR STANDARDS - CONTRACT WORK HOURS AND SAFETY STANDARDS ACT**

As used in this paragraph, the terms “laborers” and “mechanics” include watchmen and guards.

(a) **Overtime requirements**. No Contractor or subcontractor contracting for any part of the Contract work, which may require or involve the employment of laborers or mechanics, shall require or permit any such laborer or mechanic in any workweek in which that person is employed on such work to work in excess of forty hours in such workweek unless such laborer or mechanic receives compensation at a rate not less than one and one-half times the basic rate of pay for all hours worked in excess of forty hours in such workweek.

(b) **Violation; liability for unpaid wages, liquidated damages**. In the event of any violation of the clause set forth in paragraph (a) of this section, the Contractor and any subcontractor responsible therefore shall be liable for the unpaid wages. In addition, such Contractor and subcontractor shall be liable to the United States (in the case of work done under contract for the District of Columbia or a territory, to such District or to such territory), for liquidated damages. Such liquidated damages shall be computed with respect to each individual laborer or mechanic, including watchmen and guards, employed in violation of the clause set forth in paragraph (a) of this section, in the sum of $10 for each calendar day on which such individual was required or

permitted to work in excess of the standard workweek of forty hours without payment of the overtime wages required by the clause set forth in paragraph (a) of this section.

(c) **Withholding for unpaid wages and liquidated damages**. EDA or its designee shall upon its own action or upon written request of an authorized representative of the Department of Labor withhold or cause to be withheld, from any monies payable on account of work performed by the Contractor or subcontractor under any such Contract or any other federal contract with the same prime Contractor, or any other federally-assisted contract subject to the Contract Work Hours and Safety Standards Act, which is held by the same prime Contractor such sums as may be determined to be necessary to satisfy any liabilities of such Contractor or subcontractor for unpaid wages and liquidated damages as provided in the clause set forth in paragraph (b) of this section.

(d) **Subcontracts**. The Contractor or subcontractor shall insert in any subcontracts the clauses set forth in paragraphs (a) through (c) of this section and also a clause requiring the subcontractors to include these clauses in any lower tier subcontracts. The prime Contractor shall be responsible for compliance by any subcontractor or lower tier subcontractor with the clauses set forth in paragraphs (a) through (c) of this section.

17. EQUAL EMPLOYMENT OPPORTUNITY

(a) The Recipient hereby agrees that it will incorporate or cause to be incorporated into any contract for construction work, or modification thereof, as defined in the regulations of the Secretary of Labor at 41 C.F.R. chapter 60, which is paid for in whole or in part with funds obtained from EDA, the following equal opportunity clause:

> During the performance of this contract, the Contractor agrees as follows:
>
> (1) The Contractor will not discriminate against any employee or applicant for employment because of race, color, religion, sex, or national origin. The Contractor will take affirmative action to ensure that applicants are employed, and that employees are treated during employment without regard to their race, color, religion, sex or national origin. Such action shall include, but not be limited to the following: Employment, upgrading, demotion, or transfer; recruitment or recruitment advertising; layoff or termination; rates of pay or other forms of compensation; and selection for training including apprenticeship. The Contractor agrees to post in conspicuous places available to employees and applicants for employment notices to be provided setting forth the provisions of this nondiscrimination clause.
>
> (2) The Contractor will, in all solicitations or advertisements for employees placed by or on behalf of the Contractor state that all qualified applicants will receive consideration for employment without regard to race, color, religion, sex, or national origin.
>
> (3) The Contractor will send to each labor union or representative of workers with which it has a collective bargaining agreement or other contract or understanding a notice to be provided advising the said labor union or workers representatives of the Contractor's

commitments hereunder, and shall post copies of the notice in conspicuous places available to employees and applicants for employment.

(4) The Contractor will comply with all provisions of Executive Order 11246 of September 24, 1965 and of the rules, regulations, and relevant orders of the Secretary of Labor.

(5) The Contractor will furnish all information and reports required by Executive Order 11246 of September 24, 1965, and pursuant to rules, regulations, and orders of the Secretary of Labor and will permit access to its books, records, and accounts by the Secretary of Labor for purposes of investigation to ascertain compliance with such rules, regulations, and orders.

(6) In the event of the Contractor's noncompliance with the nondiscrimination clauses of this Contract or with any of the said rules, regulations, or orders, this Contract may be canceled, terminated, or suspended in whole or in part and the Contractor may be declared ineligible for further Government contracts or federally-assisted construction contracts in accordance with procedures authorized in Executive Order 11246 of September 24, 1965, and such other sanctions may be imposed and remedies invoked as provided in Executive Order 11246 of September 24, 1965, or by rule, regulations or order of the Secretary of Labor, or as otherwise provided by law.

(7) The Contractor will include the portion of the sentence immediately preceding paragraph 17(a) (1) and the provisions of paragraphs 17(a)(1) through (6) in every subcontract or purchase order unless exempted by rules, regulations, or orders of the Secretary of Labor issued pursuant to section 204 of Executive Order 11246 of September 24, 1965, so that such provisions will be binding upon each subcontractor or vendor. The Contractor will take such action with respect to any subcontract or purchase order as EDA or the Secretary of Labor may direct as a means of enforcing such provisions, including sanctions for noncompliance. Provided, however, that in the event the Contractor becomes involved in or is threatened with litigation with or by a subcontractor or vendor as a result of such direction by EDA or the Secretary of Labor, the Contractor may request the United States to enter into such litigation to protect the interests of the United States.

(8) The Recipient further agrees that it will be bound by the above equal opportunity clause with respect to its own employment practices when it participates in federally-assisted construction work. Provided, however, that if the Recipient so participating is a State or local government, the above equal opportunity clause is not applicable to any agency, instrumentality, or subdivision of such government that does not participate in work on or under the Contract.

(9) The Recipient agrees that it will assist and cooperate actively with EDA and the Secretary of Labor in obtaining the compliance of contractors and subcontractors with the equal opportunity clause and the rules, regulations, and relevant orders of the Secretary of Labor, that it will furnish EDA and the Secretary of Labor such information as they may

require for the supervision of such compliance, and that it will otherwise assist EDA in the discharge of the EDA's primary responsibility for securing compliance.

(10) The Recipient further agrees that it will refrain from entering into any contract or contract modification subject to Executive Order 11246 of September 24, 1965, with a Contractor debarred from, or who has not demonstrated eligibility for, Government contracts and federally assisted construction contracts pursuant to the Executive order and will carry out such sanctions and penalties for violation of the equal opportunity clause as may be imposed upon contractors and subcontractors by EDA or the Secretary of Labor pursuant to Part II, Subpart D of the Executive order. In addition, the Recipient agrees that if it fails or refuses to comply with these undertakings, EDA may take any or all of the following actions: Cancel, terminate, or suspend in whole or in part this EDA financial assistance; refrain from extending any further assistance to the applicant under the program with respect to which the failure or refund occurred until satisfactory assurance of future compliance has been received from such applicant; and refer the case to the Department of Justice for appropriate legal proceedings.

(b) Exemptions to Above Equal Opportunity Clause (41 C.F.R. chapter 60):

(1) Contracts and subcontracts not exceeding $10,000 (other than Government bills of lading) are exempt. The amount of the Contract, rather than the amount of the federal financial assistance, shall govern in determining the applicability of this exemption.

(2) Except in the case of subcontractors for the performance of construction work at the site of construction, the clause shall not be required to be inserted in subcontracts below the second tier.

(3) Contracts and subcontracts not exceeding $10,000 for standard commercial supplies or raw materials are exempt.

18. CONTRACTING WITH SMALL, MINORITY AND WOMEN'S BUSINESSES

(a) If the Contractor intends to let any subcontracts for a portion of the work, the Contractor shall take affirmative steps to assure that small, minority and women's businesses are used when possible as sources of supplies, equipment, construction, and services.

(b) Affirmative steps shall consist of:

(1) Placing qualified small and minority businesses and women's business enterprises on solicitation lists;

(2) Ensuring that small and minority businesses and women's business enterprises are solicited whenever they are potential sources;

(3) Dividing total requirements, when economically feasible, into smaller tasks or quantities to permit maximum participation by small and minority businesses and women's business enterprises;

(4) Establishing delivery schedules, where the requirements of the contract permit, which encourage participation by small and minority businesses and women's business enterprises;

(5) Using the services and assistance of the U.S. Small Business Administration, the Minority Business Development Agency of the U.S. Department of Commerce, and State and local governmental small business agencies;

(6) Requiring each party to a subcontract to take the affirmative steps of this section; and

(7) The Contractor is encouraged to procure goods and services from labor surplus area firms.

19. **HEALTH, SAFETY, AND ACCIDENT PREVENTION**

(a) In performing this contract, the Contractor shall:

(1) Ensure that no laborer or mechanic shall be required to work in surroundings or under working conditions which are unsanitary, hazardous, or dangerous to their health and/or safety as determined under construction safety and health standards promulgated by the Secretary of Labor by regulation;

(2) Protect the lives, health, and safety of other persons;

(3) Prevent damage to property, materials, supplies, and equipment; and,

(4) Avoid work interruptions.

(b) For these purposes, the Contractor shall:

(1) Comply with regulations and standards issued by the Secretary of Labor at 29 C.F.R. part 1926. Failure to comply may result in imposition of sanctions pursuant to the Contract Work Hours and Safety Standards Act (40 U.S.C. § 3701 – 3708); and

(2) Include the terms of this clause in every subcontract so that such terms will be binding on each subcontractor.

(c) The Contractor shall maintain an accurate record of exposure data on all accidents incident to work performed under this Contract resulting in death, traumatic injury, occupational disease, or damage to property, materials, supplies, or equipment, and shall report this data in the manner prescribed by 29 C.F.R. part 1904.

(d) The Owner shall notify the Contractor of any noncompliance with these requirements and of the corrective action required. This notice, when delivered to the Contractor or the Contractor's representative at the site of the Work, shall be deemed sufficient notice of the noncompliance and corrective action required. After receiving the notice, the Contractor shall immediately take corrective action. If the Contractor fails or refuses to take corrective action promptly, the Owner may issue an order stopping all or part of the Work until satisfactory corrective action has been taken. The Contractor shall not base any claim or request for equitable adjustment for additional time or money on any stop order issued under these circumstances.

(e) The Contractor shall be responsible for its subcontractors' compliance with the provisions of this clause. The Contractor shall take such action with respect to any subcontract as EDA, or the Secretary of Labor shall direct as a means of enforcing such provisions.

20. CONFLICT OF INTEREST AND OTHER PROHIBITED INTERESTS

(a) No official of the Owner who is authorized in such capacity and on behalf of the Owner to negotiate, make, accept, or approve, or to take part in negotiating, making, accepting, or approving any architectural, engineering, inspection, construction or material supply contract or any subcontract in connection with the construction of the Project, shall become directly or indirectly interested personally in this Contract or in any part hereof.

(b) No officer, employee, architect, attorney, engineer, or inspector of or for the Owner who is authorized in such capacity and on behalf of the Owner to exercise any legislative, executive, supervisory or other similar functions in connection with the construction of the Project, shall become directly or indirectly interested personally in this Contract or in any part thereof, any material supply contract, subcontract, insurance contract, or any other contract pertaining to the Project.

(c) The Contractor may not knowingly contract with a supplier or manufacturer if the individual or entity who prepared the Contract Documents has a corporate or financial affiliation with the supplier or manufacturer.

(d) The Owner's officers, employees, or agents shall not engage in the award or administration of this Contract if a conflict of interest, real or apparent, may be involved. Such a conflict may arise when: (i) the employee, officer or agent; (ii) any member of their immediate family; (iii) their partner or (iv) an organization that employs, or is about to employ, any of the above, has a financial interest in the Contractor. The Owner's officers, employees, or agents shall neither solicit nor accept gratuities, favors, or anything of monetary value from the Contractor or subcontractors.

(e) If the Owner finds after a notice and hearing that the Contractor, or any of the Contractor's agents or representatives, offered or gave gratuities (in the form of entertainment, gifts, or otherwise) to any official, employee, or agent of the Owner or EDA in an attempt to secure this Contract or favorable treatment in awarding, amending, or making any determinations related to the performance of this Contract, the Owner may, by written notice to the Contractor, terminate this Contract. The Owner may also pursue other rights and remedies that the law or this Contract

provides. However, the existence of the facts on which the Owner bases such findings shall be an issue and may be reviewed in proceedings under the dispute resolution provisions of this Contract.

(f) In the event this Contract is terminated as provided in paragraph (e) of this section, the Owner may pursue the same remedies against the Contractor as it could pursue in the event of a breach of this Contract by the Contractor. As a penalty, in addition to any other damages to which it may be entitled by law, the Owner may pursue exemplary damages in an amount (as determined by the Owner) which shall not be less than three nor more than ten times the costs the Contractor incurs in providing any such gratuities to any such officer or employee.

21. RESTRICTIONS ON LOBBYING

(a) This Contract, or subcontract is subject to section 319 of Public Law 101-121, which added section 1352, regarding lobbying restrictions, to chapter 13 of title 31 of the United States Code. The new section is explained in the common rule, 15 C.F.R. part 28 (55 FR 6736-6748, February 26, 1990). Each bidder under this Contract or subcontract is generally prohibited from using federal funds for lobbying the Executive or Legislative Branches of the Federal Government in connection with this EDA Award.

(b) **Contract Clause Threshold**: This Contract Clause regarding lobbying must be included in each bid for a contract or subcontract exceeding $100,000 of federal funds at any tier under the EDA Award.

(c) **Certification and Disclosure**: Each bidder of a contract or subcontract exceeding $100,000 of federal funds at any tier under the federal Award must file Form CD-512, *Certification Regarding Lobbying*, and, if applicable, Standard Form-LLL, *Disclosure of Lobbying Activities*, regarding the use of any nonfederal funds for lobbying. Certifications shall be retained by the Contractor or subcontractor at the next higher tier. All disclosure forms, however, shall be forwarded from tier to tier until received by the Recipient of the EDA Award, who shall forward all disclosure forms to EDA.

(d) **Continuing Disclosure Requirement**: Each Contractor or subcontractor that is subject to the Certification and Disclosure provision of this Contract Clause is required to file a disclosure form at the end of each calendar quarter in which there occurs any event that requires disclosure or that materially affects the accuracy of the information contained in any disclosure form previously filed by such person. Disclosure forms shall be forwarded from tier to tier until received by the Recipient of the EDA Award, who shall forward all disclosure forms to EDA.

(e) **Indian Tribes, Tribal Organizations, or Other Indian Organizations**: Indian tribes, tribal organizations, or any other Indian organizations, including Alaskan Native organizations, are excluded from the above lobbying restrictions and reporting requirements, but only with respect to expenditures that are by such tribes or organizations for lobbying activities permitted by other federal law. An Indian tribe or organization that is seeking an exclusion from Certification and Disclosure requirements must provide EDA with the citation of the provision or provisions of federal law upon which it relies to conduct lobbying activities that would otherwise

be subject to the prohibitions in and to the Certification and Disclosure requirements of section 319 of Public Law No. 101-121, preferably through an attorney's opinion. Note, also, that a non-Indian subrecipient, contractor, or subcontractor under an award to an Indian tribe, for example, is subject to the restrictions and reporting requirements.

22. HISTORICAL AND ARCHAEOLOGICAL DATA PRESERVATION

The Contractor agrees to facilitate the preservation and enhancement of structures and objects of historical, architectural or archaeological significance and when such items are found and/or unearthed during the course of project construction. Any excavation by the Contractor that uncovers an historical or archaeological artifact shall be immediately reported to the Owner and a representative of EDA. Construction shall be temporarily halted pending the notification process and further directions issued by EDA after consultation with the State Historic Preservation Officer (SHPO) for recovery of the items. *See* the National Historic Preservation Act of 1966 (80 Stat 915, 16 U.S.C. § 470) and Executive Order No. 11593 of May 31, 1971.

23. CLEAN AIR AND WATER

Applicable to Contracts in Excess of $100,000

(a) **Definition**. "Facility" means any building, plant, installation, structure, mine, vessel, or other floating craft, location, or site of operations, owned, leased, or supervised by the Contractor or any subcontractor, used in the performance of the Contract or any subcontract. When a location or site of operations includes more than one building, plant, installation, or structure, the entire location or site shall be deemed a facility except when the Administrator, or a designee, of the United States Environmental Protection Agency (EPA) determines that independent facilities are collocated in one geographical area.

(b) In compliance with regulations issued by the EPA, 2 C.F.R. part 1532, pursuant to the Clean Air Act, as amended (42 U.S.C. § 7401 *et seq*.); the Federal Water Pollution Control Act, as amended (33 U.S.C. § 1251 *et seq*.); and Executive Order 11738, the Contractor agrees to:

(1) Not utilize any facility in the performance of this contract or any subcontract which is listed on the EPA List of Violating Facilities pursuant to 2 C.F.R. part 1532 for the duration of time that the facility remains on the list;

(2) Promptly notify the Owner if a facility the Contractor intends to use in the performance of this contract is on the EPA List of Violating Facilities or the Contractor knows that it has been recommended to be placed on the List;

(3) Comply with all requirements of the Clean Air Act and the Federal Water Pollution Control Act, including the requirements of section 114 of the Clean Air Act and section 308 of the Federal Water Pollution Control Act, and all applicable clean air and clean water standards; and

(4) Include or cause to be included the provisions of this clause in every subcontract and take such action as EDA may direct as a means of enforcing such provisions.

24. USE OF LEAD-BASED PAINTS ON RESIDENTIAL STRUCTURES

(a) If the work under this Contract involves construction or rehabilitation of residential structures, the Contractor shall comply with the Lead-based Paint Poisoning Prevention Act (42 U.S.C. § 4831). The Contractor shall assure that paint used on the Project on applicable surfaces does not contain lead in excess of the percentages set forth in Paragraphs (a) and (b) of this section. In determining compliance with these standards, the lead content of the paint shall be measured on the basis of the total nonvolatile content of the paint or on the basis of an equivalent measure of lead in the dried film of paint already applied.

(1) For paint manufactured after June 22, 1977, paint may not contain lead in excess of 6 one-hundredths of 1 percent (.0006) lead by weight.

(2) For paint manufactured on or before June 22, 1977, paint may not contain lead in excess of five-tenths of 1 percent lead by weight.

(b) As a condition to receiving assistance under PWEDA, recipients shall assure that the restriction against the use of lead-based paint is included in all contracts and subcontracts involving the use of federal funds.

(c) **Definitions**

(1) "Applicable surfaces" are those exterior surfaces which are readily accessible to children under seven years of age.

(2) "Residential structures" means houses, apartments, or other structures intended for human habitation, including institutional structures where persons reside, which are accessible to children under seven years of age, such as day care centers, intermediate and extended care facilities, and certain community facilities.

25. ENERGY EFFICIENCY

The Contractor shall comply with all standards and policies relating to energy efficiency which are contained in the energy conservation plan issued in compliance with the Energy Policy and Conservation Act (Public L. No. 94-163) for the State in which the Work under the Contract is performed.

26. ENVIRONMENTAL REQUIREMENTS

When constructing a Project involving trenching and/or other related earth excavations, the Contractor shall comply with the following environmental constraints:

(1) **Wetlands**. When disposing of excess, spoil, or other construction materials on public or private property, the Contractor shall not fill in or otherwise convert wetlands.

(2) **Floodplains**. When disposing of excess, spoil, or other construction materials on public or private property, the Contractor shall not fill in or otherwise convert 100 year floodplain areas delineated on the latest Federal Emergency Management Agency (FEMA) Floodplain Maps, or other appropriate maps, i.e., alluvial soils on Natural Resource Conservation Service (NRCS) Soil Survey Maps.

(4) **Endangered Species**. The Contractor shall comply with the Endangered Species Act, which provides for the protection of endangered and/or threatened species and critical habitat. Should any evidence of the presence of endangered and/or threatened species or their critical habitat be brought to the attention of the Contractor, the Contractor will immediately report this evidence to the Owner and a representative of EDA. Construction shall be temporarily halted pending the notification process and further directions issued by EDA after consultation with the U.S. Fish and Wildlife Service.

27. DEBARMENT, SUSPENSION, INELIGIBILITY, AND VOLUNTARY EXCLUSIONS

As required by Executive Order 12549, *Debarment and Suspension*, and implemented at 2 C.F.R. part 1326, for prospective participants in lower tier covered transactions (except subcontracts for goods or services under the $25,000 small purchase threshold unless the subrecipient will have a critical influence on or substantive control over the award), as defined at 2 C.F.R. part 1326.

(1) By entering into this Contract, and by further executing Form CD-512, the Contractor and subcontractors certify, that neither it nor its principals is presently debarred, suspended, proposed for debarment, declared ineligible, or voluntarily excluded from participation in this Contract by any federal department or agency.

(2) Where the Contractor or subcontractors are unable to certify to any of the statements in this certification, the Contractor or subcontractors shall attach an explanation to this bid.

*See also*15 C.F.R. §§ 14.13 or 24.35, as applicable.

28. EDA PROJECT SIGN

The Contractor shall supply, erect, and maintain in good condition a Project sign according to the specifications provided by EDA. To the extent practical, the sign should be a free standing sign. Project signs shall not be located on public highway rights-of-way. Location and height of signs will be coordinated with the local agency responsible for highway or street safety in the Project area, if any possibility exists for obstructing vehicular traffic line of sight. Whenever the EDA site sign specifications conflict with State law or local ordinances, the EDA Regional Director will permit such conflicting specifications to be modified so as to comply with State law or local ordinance.

Back

ECONOMIC DEVELOPMENT ADMINISTRATION
EDA REQUIRED SPECIFICATION DOCUMENTS

Below are the documents that EDA requires to be inserted into the specifications:

- **EDA Required Specification Documents**
  - Davis-Bacon Wage Rates
  - Lobbying Certification and Restriction Forms

    (Required for all contracts in which Federal funds exceed $100,000)
  - Requirements for Affirmative Action (EEO)
  - EDA Contracting Provisions for Construction Projects
  - EDA Construction Site Sign Specifications

    (Insert the sign specifications into the *EDA Contracting Provisions for Construction Projects* if the sign has not yet been erected);

    ✓ There is information available in a variety of file formats for the contractor or sign-maker (See EDA Construction Site Sign)

EDA PROJECT SIGN

The Contractor shall supply, erect, and maintain in good condition a project sign according to the specifications set forth below:

EDA SITE SIGN SPECIFICATIONS

Size: 4' x 8' x ¾"

Materials: Exterior grade/MDO plywood (APA rating A-B)

Supports: 4" x 4" x 12' posts with 2" x 4" cross branching

Erection: Posts shall be set a minimum of three feet deep in concrete footings that are at least 12" in diameter.

Paint: Outdoor enamel

Colors: Jet Black, Blue (PMS300), and Gold (PMS7406). Specifically, on white background the following will be placed:

The U. S. Department of Commerce seal in blue, black, and gold;

"EDA" in blue;

"U. S. DEPARTMENT OF COMMERCE ECONOMIC DEVELOPMENT ADMINISTRATION" in black;

"In partnership with" in blue;

(Actual name of the) "Investment Recipient" in black;

"PUTTING AMERICA TO WORK" in blue;

"Barack Obama, President of the United States" in black.

Lettering: Specific fonts are named below; positioning will be as shown on the attached illustration.

"U. S. DEPARTMENT OF COMMERCE ECONOMIC DEVELOPMENT ADMINISTRATION" use Bank Gothic Medium - BANK GOTHIC MED

"In partnership with" use Univers™ 55 Oblique - Univers 55

(Name of) "Investment Recipient" use Univers™ Extra Black 85 - **Univers 85**

"PUTTING AMERICA TO WORK" use Walkway Black - Walkway

"Barack Obama, President of the United States" use Univers™ 55 Oblique - Univers 55

Project signs will not be erected on public highway rights-of-way. If any possibility exists for obstruction to traffic line of sight, the location and height of the sign will be coordinated with the agency responsible for highway or street safety in the area.

The EDA Regional Director may permit modifications to these specifications if they conflict with state law or local ordinances.

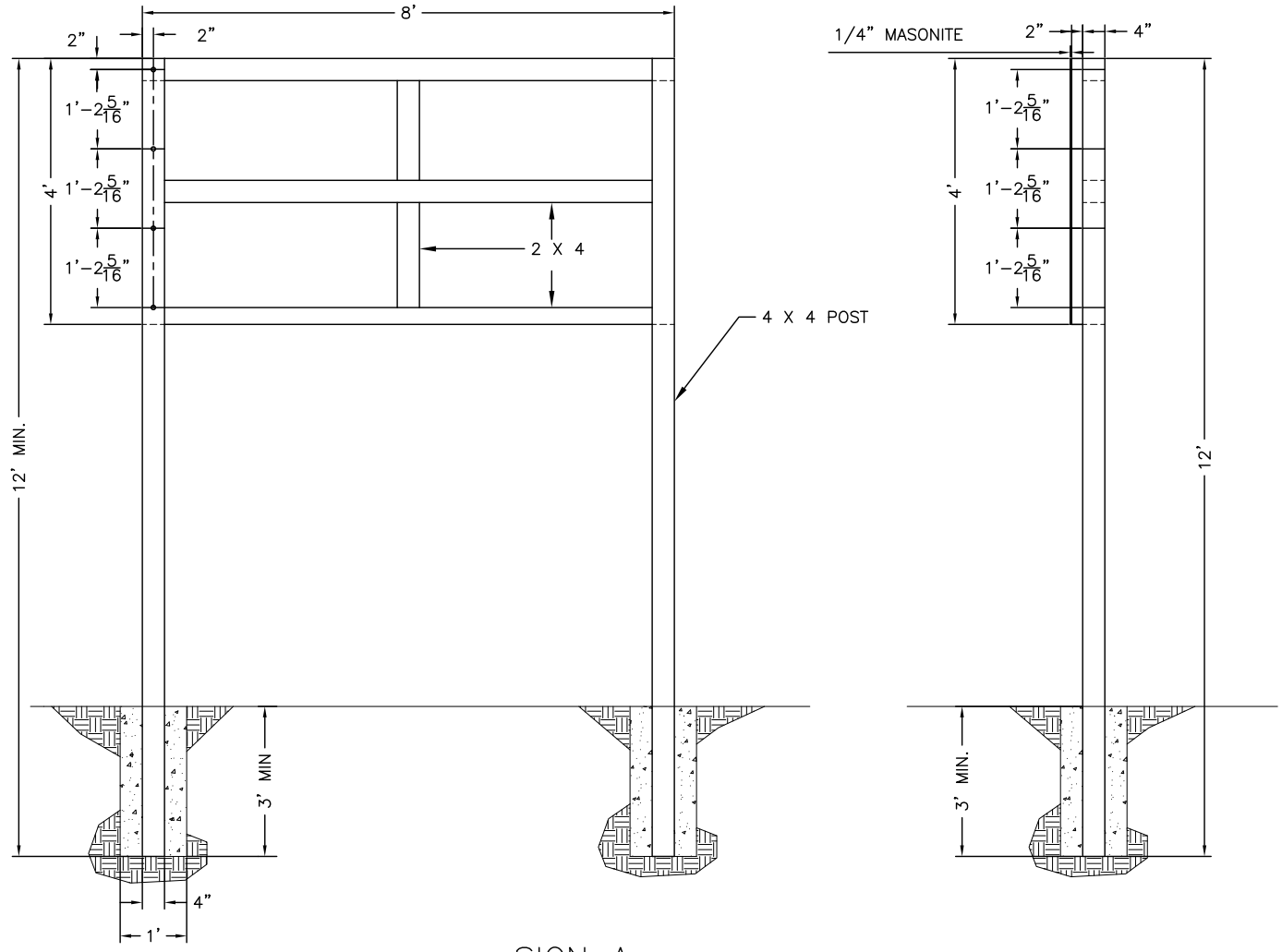

SIGN A
MASONITE SIGN

SCALE: 3/8" = 1'

PROJECT - SIGN A
ECONOMIC DEVELOPMENT ADMINISTRATION

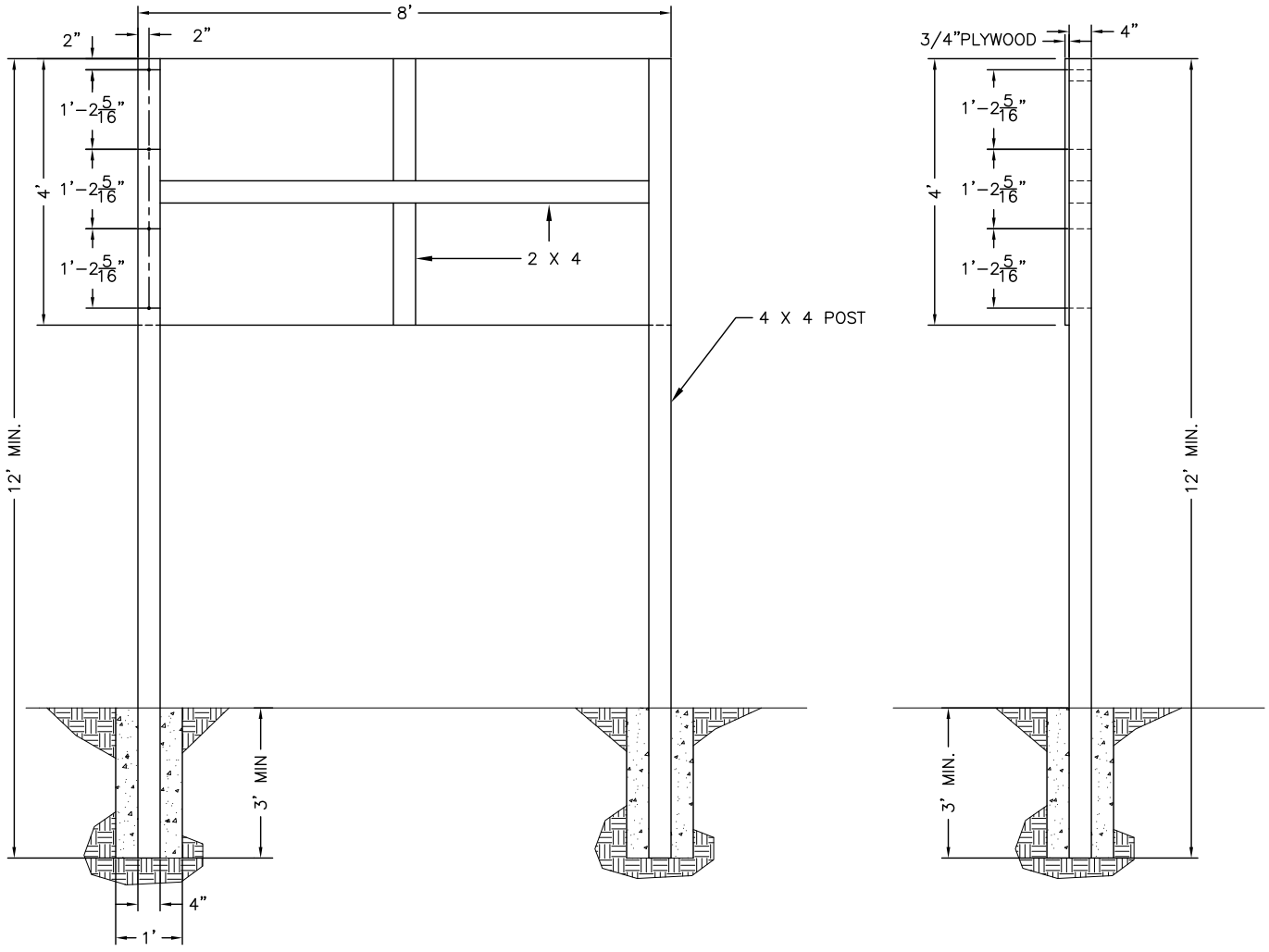

SIGN B
PLYWOOD SIGN
SCALE: 3/8" = 1'

PROJECT - SIGN B
ECONOMIC DEVELOPMENT ADMINISTRATION

EDA

U.S. DEPARTMENT OF COMMERCE ECONOMIC DEVELOPMENT ADMINISTRATION

In partnership with

Recipient Name

PUTTING AMERICA TO WORK

Barack Obama, President of the United States

2.25”
13.5”
1.75”
1.75”
DEPARTMENT OF COMMERCE
UNITED STATES OF AMERICA
EDA
10”
Black
Blue= PMS300
Gold= PMS7406
2.0”
1.5”
4.0”
3.0”
3.0”
3.75”
3.0”
4.25”
2.0”
1.75”
4.0”
48”
U.S. DEPARTMENT OF COMMERCE ECONOMIC DEVELOPMENT ADMINISTRATION
In partnership with
Recipient Name
PUTTING AMERICA TO WORK
Barack Obama, President of the United States

ECONOMIC AREAS

STATE	GOAL (percent)

Maine:

001 Bangor, ME:
- Non-SMSA Counties — 0.8
  - ME Aroostook; ME Hancock; ME Penobscot; ME Piscataquis; ME Waldo; ME Washington.

002 Portland-Lewiston, ME:
- SMSA Counties:
  - 4243 Lewiston-Auburn, ME — 0.5
    - ME Androscoggin.
  - 6403 Portland, ME — 0.6
    - ME Cumberland; ME Sagadahoc.
- Non-SMSA Counties — 0.5
  - ME Franklin; ME. Kennebec; ME Knox. ME; Lincoln; ME Oxford; ME Somerset; ME York.

Vermont:

003 Burlington, VT:
- Non-SMSA Counties — 0.8
  - NH Coos; NH Grafton; NH Sullivan; VT Addison; VT Caledonia; VT Chittenden; VT Essex; VT Franklin; VT Grand Isle; VT Lamoille; VT Orange; VT Orleans; VT Ruthland; VT Washington; VT Windsor.

Massachusetts:

004 Boston, MA:
- SMSA Counties:
  - 1123 Boston - Lowell - Brockton - Lawrence - Haverhill. MA-NH — 4.0
    - MA Essex; MA Middlesex; MA Norfolk; MA Plymouth; MA Suffolk; NH Rockingham.
  - 4763 Manchester-Nashua, NH — 0.7
    - NH Hillsborough.
  - 5403 Fail River-New Bedford, MA — 1.6
    - MA Bristol
  - 9243 Worcester - Fitchburg – Leominster, MA — 1.6
    - MA Worcester.
- Non-SMSA Counties — 3.6
  - MA Barnstable; MA Dukes-, MA Nantucket, NH Belknap; NH Carroll; NH Merrimack; NH Strafford.

Rhode Island:

005 Providence - Warwick - Pawtucket, RI:
- SMSA Counties:
  - 6483 Providence - Warwick - Pawtucket RI — 3.0
    - RI Bristol; RI Kent; RI Providence; RI Washington
- Non-SMSA Counties — 3.1
  - RI Newport.

Connecticut (Massachusets):

006 Hartford - New Haven - Springfield, CT-MA:
SMSA Counties:
3283 Hartford - New Britain – Bristol, CT 6.9
CT Hartford; CT Middlesex; CT Tolland
5483 New Haven - Waterbury – Meriden, CT 9.0
CT New Haven.
5523 New London - Norwich, CT 4.5
CT New London.
6323 Pittsfield, MA 1.6
MA Berkshire.
8003 Springfield - Chicopee - Holyoke. MA-CT 4.8
MA Hampden; MA Hampshire.
Non-SMSA Counties 5.9
CT Litchfield; CT Windham; MA Franklin; NH Cheshire; VT Windham.

New York:

007 Albany - Schenectady - Troy, NY:
SMSA Counties:
0160 Albany - Schenectady – Troy, NY 3.2
NY Albany; NY Montgommy, NY Rensselaer, NY Saratoga; NY Schenectady.
Non-SMSA Counties 2.6
NY Clinton; NY Columbia; NY Essex; NY Fulton; NY Greene; NY Hamilton, NY Schoharie
NY Warren; NY Washington; VT Bennington.
008Syracuse - Utica, NY:
SMSA Counties:
8160 Syracuse 3.8
NY Madison; NY Onondaga; NY Oswego.
8680 Utica -Rome, NY 2.1
NY Herkimer; NY Oneida.
Non-SMSA Counties 2.5
NY Cayuga; NY Cortland; NY Franklin; NY Jefferson; NY Lewis; NY St. Lawrence.
009 Rochester, NY:
SMSA Counties:
6840 Rochester, NY 5.3
NY Livingston; NY Monroe; NY Ontario; NY Orleans; NY Wayne.
Non-SMSA Counties 5.9
NY Genesee; NY Seneca; NY Yates.
010 Buffalo, NY:
SMSA Counties:
1280 Buffalo, NY 7.7
NY Erie; NY Niagara.
Non-SMSA Counties 6.3
NY Allegany; NY Cattaraugus; NY Chautauqua; NY Wyoming. PA McKean; PA Potter.
011 Binghamton - Elmira, NY:
SMSA Counties
0960 Binghamton, NY - PA 1.1
NY Broome; NY Tioga; PA Susquehanna.
2335 Elmira, NY 2.2
NY Chemung
Non-SMSA Counties 1.2
NY Chenango; NY Delaware; NY Otsego; NY Schuyler; NY Steuben; NY Tompkins;
PA Bradford; PA Tioga.
012 New York, NY:
SMSA Counties:

1163 Bridgeport - Stamford - Norwalk - Danbury, CT 10.2
CT Fairfield.
3640 Jersey City, NJ 12.8
NJ Hudson.
4410 Long Branch - Asbury Park, NJ 9.5
NJ Monmouth
5380 Nassau – Suffolk, NY 5.8
NY Nassau; NY Suffolk.
5460 New Brunswick - Perth Amboy - Sayreville, NJ.
NJ Middlesex 5.8
5600 New York NY, NJ .
NJ Bergen; NY Putnam; NY Rockland; NY Westchester 22.6

The following goal ranges are applicable to the indicated trades in the counties of Bronx, Kings, New York, Queens, and Richmond.

Electricians	9.0 to 10.2
Carpenters	27.6 to 32.0
Steam fitters	12.2 to 13.5
Metal lathers	24.6 to 25.6
Painters	28.6 to 26.0
Operating Engineers	25.6 to 26.0
Plumbers	12.0 to 14.5
Iron workers (struct)	25.9 to 32.0
Elevator constructors	5.5 to 6.5
Bricklayers	13.4 to 15.5
Asbestos workers	22.8 to 28.0
Roofers	6.3 to 7.5
Iron workers (ornamental)	22.4 to 23.0
Cement masons	23.0 to 27.0
Glaziers	16.0 to 20.0
Plasterers	15.8 to 18.0
Teamsters	22.0 to 22.5
Boilermakers	13.0 to 15.5
All others	16.4 to 17.5

5640 Newark, NJ 17.3
NJ Essex; NJ Morris; NJ Somerset; NJ Union.
6040 Paterson - Clifton - Passaic., NJ 12.9
NJ Passaic.
6460 Poughkeepsie, NY 6.4
NY Dutchese
Non-SMSA Counties 17.0
NJ Hunterdon; NJ Ocean; NJ Sussex; NY Orange; NY Sullivan; NY Ulster; PA Pike.

Pennsylvania:

013 Scranton - Wilkes-Barre, PA:
SMSA Counties
5745 Northeast Pennsylvania 0.6
PA Lackawanna; PA Luzerne; PA Monroe.
Non-SMSA Counties 0.5
PA Columbia; PA Wayne; PA Wyoming.
014 Williamsport, PA:
SMSA Counties
9140 Williamsport, PA 1.0

PA Lycoming.
Non-SMSA Counties 0.7
PA Cameron; PA Centre; PA Clearfield; PA Clinton; PA Elk; PA Jefferson;
PA Montour; PA Northumberland; PA Snyder; PA Sullivan; PA Union.
015 Erie, PA:
SMSA Counties:
2360 Erie, PA 2.8
PA Erie.
Non-SMSA Counties 1.8
PA Clarion; PA Crawford; PA Forest; PA Venango; PA Warren.
016 Pittsburgh, PA:
SMSA Counties
0280 Altoona, PA 1.0
PA Blair.
3680 Johnson, PA 1.3
PA Cambria; PA Somerset.
6280 Pittsburgh, PA 6.3
PA Allegheny; PA Beaver; PA Washington; PA Westmoreland.
Non-SMSA Counties 4.8
MD Allegany; MD Garrett; PA Armstrong; PA Bedford; PA Butler;
PA Fayette; PA Greene; PA Indiana; WV Mineral.
017 Harrisburg - York - Lancaster, PA:
SMSA Counties
3240 Harrisburg PA 6.2
PA Cumberland; PA Dauphin; PA Perry.
4000 Lancaster, PA 2.0
PA Lancaster.
9280 York, PA 2.2
PA Adams; PA York.
Non-SMSA-Counties 3.1
PA Franklin; PA Fulton; PA Huntingdon; PA Juniata; PA Lebanon; PA Mifflin.
018 Philadelphia, PA:
SMSA Counties
0240 Allentown - Bethlehem - Easton, PA-NJ 1.6
NJ Warren; PA Carbon; PA Lehigh; PA Northhampton.
0560 Atlantic City, NJ 18.2
NJ Atlantic
6160 Philadelphia, PA-NJ 17.3
NJ Burlington; NJ Camden; NJ Glouchester; PA Bucks; PA Chester;
PA Delaware; PA Montgomery; PA Philadelphia.
8680 Reading, PA 2.5
PA Berks.
8480 Trenton, NJ 16.4
NJ Mercer.
8760 Vineland - Millville - Bridgeton, NJ 16.0
NJ Cumberland.
9160 Wilmington, DE-NJ-MD 12.3
DE Now Castle; MD Cecil; NJ Salem.
Non-SMSA Counties 14.5
DE Kent; DE Sussex; NJ Cape May; PA Schuylkill.

Maryland:

019 Baltimore, MD
SMSA Counties:
0720 Baltimore MD 23.0
MD Anne Arundel; MD Baltimore; MD Carroll; MD Harford; MD Howard;
MD Baltimore City.

Non-SMSA Counties 23.6
MD Caroline; MD Dorchester; MD Kent; MD Queen Annes; MD Somerset;
MD Talbot; MD Wicomico; MD Worcester; VA Accomack; VA Northamptom

Washington DC:

020 Washington DC:
SMSA Counties
8840 Washington, DC-MD-VA 28.0
DC District of Columbia; MD Charles; Montgomery; MD Prince Georges;
VA Arlington; VA Fairfax; VA Loudoun; VA Prince William; VA Alexandria;
VA Fairfax City; VA Falls Church.
Non-SMSA Counties 25.2
MD Calvert; MD Frederick; MD St. Marys; MD Washington; VA Clarke;
VA Culpepper; VA Fauquier; VA Frederick; VA King George; VA Page;
VA Rappahannock; VA Shenandoah; VA Spottsylvania; VA Stafford; VA Warren;
VA Westmoreland; VA Fredericksburg; VA Winchester; WV Berkeley; WV Grant;
WV Hampshire;. WV Hardy; WV Jefferson; WV Morgan.

Virginia:

021 Roanoke-Lynchburg VA:
SMSA C4unties:
4640 Lynchburg, VA 19.3
VA Amherst; VA Appomattox; VA Campbell; VA Lynchburg.
6800 Roanoke, VA 10.2
VA Botetourt; VA Craig; VA Roanoke VA; VA Roanoke City; *VA* Salem.
Non-SMSA Counties 12.0
VA Alleghany, VA Augusta; VA Bath; VA Bedford; VA Bland; VA Carroll; VA Floyd;
VA Franklin; VA Giles; VA Grayson; VA Henry; VA Highland; VA Montgomery;
VA Nelson; VA Patrick; VA Pittsylvania; VA Pulaski; VA Rockbridge;
VA Rockingham; VA Wythe; VA Bedford City; VA Buena Vista; VA Clifton Forge;
VA Covington; VA Danville; VA Galex; VA Harrisonburg; VA Lexington; VA Martinsville;
VA Radford; VA Staunton; VA Waynesboro; WV Pendleton.
022 Richmond, VA:
SMSA Counties:
6140 Petersburg - Colonial Heights – Hopewell, VA 30.6
VA Dinwiddie; VA Prince George; VA Colonial Heights; VA Hopewell; VA Petersburg.
6760 Richmond, VA 24.9
VA Charles City; VA Chesterfield; VA Goochland; VA Hanover; VA Henrico;
VA New Kent; VA Powhatan; VA Richmond.
Non-SMSA Counties 27.9
VA Albemarle; VA Amelia; VA Brunswick; VA Buckingham; VA Caroline; VA Charlotte;
VA Cumberland; VA Essex; VA Fluvanna; VA Greene; VA Greensville; VA Halifax;
VA King And Queen; VA King William; VA Lancaster; VA Louisa; VA Lunenberg;
VA Madison; VA Mecklenburg; VA Northumberland; VA Nottoway; VA Orange; VA Prince
Edward; VA Richmond; VA Sussex; VA Charlottesville; VA Emporia; VA South Boston.

023 Norfolk - Virginia Beach - Newport News,VA:
SMSA Counties:
5680 Newport News-Hampton, VA.... 27.1
VA Gloucester, VA James City; VA York; VA Hampton; VA Newport News;
VA Williamsburg.
5720 Norfolk - Virginia Beach – Portsmouth VA – NC 26.6
NC Currituck; VA Chesapeake; VA Norfolk; VA Portsmouth; VA Suffolk;
VA Virginia Beach.

Non-SMSA Counties 29.7
NC Bertie; NC Camden; NC Chowan; NC Gates; NC Hertford; NC Pasquotank; NC Perquimans; VA Isle of Wight; VA Matthews; VA Middlesex; VA Southampton; VA Surry; VA Franklin.

North Carolina:

024 Rocky Mount - Wilson - Greenville NC:
Non-SMSA Counties 31.7
NC Beaufort; NC Carteret; NC Craven; NC Dare; NC Edgecombe; NC Greene; NC Halifax; NC Hyde; NC Jones; NC Lenoir; NC Martin; NC Nash; NC Northampton; NC Pamlico; NC Pitt; NC Tyrrell; NC Washington; NC Wayne; NC Wilson

025 Wilmington, NC:
SMSA Counties:
9200 Wilmington, NC 20.7
NC Brunswick; NC New Hanover.
Non-SMSA counties 23.5
NC Columbus; NC Duplin; NC Onslow; NC Pender.

026 Fayetteville, NC:
SMSA Counties:
2560 Fayetteville, NC 26.2
NC Cumberland.
Non-SMSA Counties 33.5
NC Bladen; NC Hoke; NC Richmond; NC Robeson; NC Sampson; NC Scotland.

027 Raleigh - Durham, NC.
SMSA Counties:
6640 Raleigh – Durham 22.8
NC Durham; NC Orange; NC Wake.
Non-SMSA Counties 24.7
NC Chatham; NC Franklin; NC Granville; NC Harnett; NC Johnston; NC Lee; NC Person; NC Vance; NC Warren.

028 Greensboro - Winston Salem - High Point, NC:
SMSA Counties:
1300 Burlington, NC 16.2
NC Alamance.
3120 Greensboro - Winston Salem – High Point NC 16.4
NC Davidson; NC Forsyth; NC Guilford; NC Randolf; NC Stokes; NC Yadkin.
Non-SMSA Counties 15.5
NC Alleghany; NC Ashe; NC Caswell; NC Davie; NC Montgomery; NC Moore; NC Rockingham; NC Surry; NC Watauga; NC Wilkes.

029 Charlotte, NC:
SMSA Counties:
1520 Charlotte – Gastonia, NC 18.5
NC Gaston; NC Mecklenburg; NC Union.
Non-SMSA Counties 15.7
NC Alexander; NC Anson; NC Burke; NC Cabarrus; NC Caldwell; NC Catawba; NC Cleveland; NC Iredell; NC Lincoln; NC Rowan; NC Rutherford; NC Stanley; SC Chester; SC Lancaster SC York.

030 Asheville, NC
Non-SMSA Counties:
0480 Asheville, NC 8.5
NC Buncombe; NC Madison.
Non-SMSA Counties 6.3
NC Avery; NC Cherokee; NC Clay; NC Graham; HC Heywood; NC Henderson; NC Jackson; NC McDowell; NC Macon; NC Mitchell; NC Swain; NC Transylvania; NC Yancey.

South Carolina:

031 Greenville – Spartanburg, SC:
SMSA Counties:
3160 Greenville –Spartanburg, SC 16.0
SC Greenville; SC Pickens; SC Spartanburg.
Non-SMSA Counties 17.8
SC Polk; SC Abbeville; SC Anderson; SC Cherokee; SC Greenwood; SC Laurens; SC Oconee; SC Union.

032 Columbia, SC
SMSA Counties:
1760 Columbia, SC 23.4
SC Lexington; SC Richland.
Non-SMSA Counties 32.0
SC Calhoun SC Clarendon; SC Fairfield; SC Kershaw; SC Lee; SC Newberry; SC Orangeburg; SC Saluda; SC Sumter

033 Florence, SC
Non-SMSA Counties 33.0
SC Chesterfield; SC Darlington; SC Dillon; SC Florence; SC Georgetown; SC Horry; SC Marion; SC Marlboro; SC Williamsburg.

034 Charleston - North Charleston, SC
SMSA Counties
1440 Charleston - North Charleston, SC 30.0
SC Berkeley; SC Charleston; SC Dorchester.
Non-SMSA Counties 30.7
SC Collection

Georgia:

035 Augusta, GA:
SMSA Counties:
0600 Augusta, GA – SC 27.2
GA Columbia; GA Richmond; SC Aiken
Non-SMSA Counties 32.8
GA Burke; GA Emanuel; GA Glascock; GA Jefferson; GA Jenkins; GA Lincoln; GA McDuffie; GA Taliaferro; GA Warren; GA Wilkes; SC Allendale, SC Bamberg; SC Barnwell; SC Edgefield; SC McCormick

036 Atlanta, GA
SMSA Counties
0520 Atlanta 21.2
GA Butts; GA Cherokee; GA Clayton; GA Cobb; GA Dekalb; GA Douglas; GA Fayette; GA Forsyth; GA Fulton; GA Gwinnett; GA Henry, GA Newton; GA Paulding; GA Rockdale; GA Walton
Non-SMSA Counties 19.5
GA Banks; GA Barrow; GA Bartow; GA Carroll; GA Clarke; GA Coweta; GA Dawson; GA Elbert; GA Fannin; GA Floyd; GA Franklin; GA Gilmer; GA Gordon; GA Greene; GA Habersham; GA Hall; GA Haralson; GA Hart; GA Heard; GA Jackson; GA Jasper; GA Lamar, GA Lumpkin; GA Madison, GA Morgan; GA Oconee, GA Oglethorpe; GA Pickens; GA Pike; GA Polk; GA Rabun, GA Spalding; GA Stephens; GA Towns; GA Union; GA Upson; GA White.

037 Columbus, GA:
SMSA Counties
1800 Columbus 29.6
AL Russell; GA Chattahoochee; GA Columbus.
Non-SMSA Counties 31.6
AL Chambers; AL Lee; GA Harris; GA Marion; GA Meriwether; GA Quitman; GA Schley; GA Stewart; GA Sumter; GA Talbot; GA Troup; GA Webster.

038 Macon, GA:
SMSA Counties
4660 Macon, GA 27.5
GA Bibb; GA Houston; GA Jones; GA Twiggs.
Non-SMSA Counties 31.7
GA Baldwin; GA Bleckley; GA Crawford; GA Crisp; GA Dodge; GA Dooly; GA Hancock; GA Johnson; GA Laurens; GA Macon; GA Monroe; GA Peach; GA Pulaski; GA Putnam. GA Taylor; GA Telfair; GA Treutlen; GA Washington; GA Wheeler; GA Wilcox; GA Wilkinson.
039 Savannah, GA:
SMSA Counties:
7520 Savannah, GA 30.6
GA Bryan; GA Chatham; GA Effingham
Non-SMSA Counties 29.8
GA Appling; GA Atkinson; GA Bacon; GA Bullock; GA Candler; GA Coffee; GA Evans; GA Jeff Davis; GA Liberty; GA Long; GA McIntosh; GA Montgomery; GA Screven; GA Tattinall; GA Toombs; GA Wayne; SC Beaufort; SC Hampton; SC Jasper.
040 Albany, GA
SMSA Counties
0120 Albany, GA 32.1
GA Dougherty; GA Lee.
Non-SMSA Counties 31.1
GA Baker; GA Ben HiI; GA Berrien; GA Brooks; GA Calhoun; GA Clay; GA Clinch; GA Colquitt; GA Cook; GA Decatur; GA Early; GA Echols; GA Grady; GA Irwin; GA Lanier; GA Lowndes; GA Miller; GA Mitchell; GA Randolph; GA Seminole, GA Terrell; GA Thomas; GA Tift; GA Turner; GA Worth.

Florida:

041 Jacksonville, FL:
SMSA Counties
2900 Gainesville, FL 20.6
FL Alachua
3600 Jacksonville, FL 21.8
FL Baker; FL Clay; FL Duval; FL Nassau; FL St. Johns.
Non-SMSA Counties 22.2
FL Bradford; FL Columbia; FL Dade; FL Gilchrist; FL Hamilton; FL LaFayetle; FL Levy; FL Marion; FL Putnam; FL Suwannee; FL Union; GA Brantley; GA Camden; GA Charlton; GA Glynn; GA Pierce; GA Ware.
042 Orlando - Melbourne - Daytona Beach, FL.
SMSA Counties:
2020 Daytona Beach, FL 15.7
FL Volusia.
4900 Melbourne – Tutusville – Cocoa, FL 10.7
FL Brevard.
5960 Orlando, FL 15.5
FL Orange; FL Osceola; FL Seminole.
Non-SMSA Counties 14.9
FL Flagler; FL Lake; FL Sumter.
043 Miami - Fort Lauderdale, FL:
SMSA Counties:
2680 Fort Lauderdale – Hollywood, FL 15.5
FL. Broward.
5000 Miami, FL 39.5
FL Dade.
8960 West Palm Beach - Boca Raton, FL 22.4
FL Palm Beach.

Non-SMSA Counties 30.4
FL Glades; FL Hendry; FL Indian River; FL Martin; FL Monroe;
FL Okeechobee; FL St. Lucie.

044 Tampa - St Petersburg, FL
SMSA Counties:
1140 Bradenton, FL 15.9
FL Manatee.
2700 Fort Myers, FL 15.3
FL Lee.
3980 Lakeland - Winter Haven, FL 18.0
FL Polk
7510 Sarasota, FL 10.5
FL Sarasota.
8280 Tampa - St. Petersburg, FL 17.9
FL Hillsborough, FL Pasco; FL Pinellas
Non-SMSA Counties 17.1
FL Charlotte; FL Citrus; FL Collier, FL Desoto; FL Hardee; FL Hernando; FL Highlands.

045 Tallahassee. FL:
SMSA Counties:
8240 Tallahassee, FL 24.3
FL Leon; FL Wakulla.
Non-SMSA Counties: 29.5
FL Calhoun; FL Franklin; FL Gadsden; FL Jackson; FL Jefferson; FL Liberty;
FL Madison; FL Taylor.

046 Pensacola - Panama City, FL
SMSA Counties:
8615 Panama City, FL 14.1
FL Bay.
6080 Pensacola, FL 18.3
FL Escambia; FL Santa Rosa.
Non-SMSA Counties 15.4
FL Gulf; FL Holmes; FL Okaloosa; FL Walton; FL Washington.

Alabama:

047 Mobile, AL
SMSA Counties:
5160 Mobile, AL 26.9
AL Baldwin; AL Mobile.
6026 Pascagoula - Moss, Point MS 16.9
MS Jackson.
Non-SMSA Counties 26.4
AL Choctaw; AL Clarke; AL Conecuh; AL Escambia; AL Monroe; AL Washington; AL Wilcox;
MS George; MS Greene.

048 Montgomery, AL:
SMSA Counties
5240 Montgomery, AL 29.9
AL Autauga; AL Elmore; AL Montgomery.
Non-SMSA Counties 29.9
AL Barbour; AL Bullock; AL Butler; AL Coffee; AL Coosa; AL Covington;
AL Crenshaw; AL Dale; AL Dallas; AL Geneva; AL Henry; AL Houston;
AL Lowndes; AL Macon; AL Perry; AL Pike; AL Tallapoosa.

049 Birmingham, AL:
SMSA Counties:
0450 Anniston, AL 14.3
AL Calhoun.

1000 Birmingham, AL 24.9
AL Jefferson; AL St. Clair; AL Shelby; AL Walker; AL Etowah
8600 Tuscaloosa, AL 20.6
AL Tuscaloosa.
Non-SMSA Counties 20.7
AL Bibb; AL Blount; AL Cherokee; AL Chilton; AL Clay; AL Cleburne; AL Cullman; AL Fayette; AL Greene; AL Hale; AL Lamar; AL Marion; AL Pickens; AL Randolph; AL Sumter; AL Talladega; AL Winston.

050 Huntsville – Florence, AL:
SMSA Counties:
2650 Florence, AL 11.9
AL Colbert; AL Lauderdale.
3440 Huntsville, AL 12.0
AL Limestone; AL Madison; AL Marshall.
Non-SMSA Counties 11.2
AL Franklin; AL Lawrence AL Morgan; TN Lincoln.

Tennessee:

051 Chattanooga, TN:
SMSA Counties:
1560 Chattanooga, TN – GA 12.5
GA Catoosa; GA Dade; GA Walker; TN Hamilton;TN Marion; TN Sequatchie.
Non-SMSA Counties 8.6
AL De Kalb; AL Jackson; GA Chattooga; GA Murray; GA Whitfield; TN Bledsoe; TN Bradley; TN Grundy; TN McMinn; TN Meigs; TN Monroe; TN Polk; TN Rhea.

052 Johnson City - Kingsport - Bristol, TN-VA:
SMSA Counties:
3660 Johnson City - Kingsport - Bristol. TN – VA 2.6
TN Carter; TN Hawkins; TN Sullivan; TN Unicoi; TN Washington; VA Scott; VA Washington; VA Bristol.
Non-SMSA Counties 3.2
TN Greene; TN Hancock; TN Johnson; VA Buchanan; VA Dickenson; VA Lee; VA Russell; VA Smyth; VA Tazewell; VA Wise; VA Norton; WV McDowell, WV Mercer.

053 Knoxville, TN
SMSA Counties:
3840 Knoxville, TN 6.6
TN Anderson; TN Blount; TN Knox; TN Union.
Non-SMSA Counties 4.5
KY Bell; KY Harlan; KY Knox; KY Laurel; KY McCreary; KY Wayne; KY Whitley; TN Campbell; TN Claiborne; TN Cocke; TN Cumberland; TN Fentress; TN Grainger, TN Hamblen; TN Jefferson; TN Loudon; TN Morgan; TN Roane; TN Scott; TN Sevier.

054 Nashville, TN:
SMSA Counties:
1660 Clarksville - Hopkinsville, TN - KY 18.2
KY Christian; TN Montgomery.
5360 Nashville - Davidson, TN 15.8
TN Cheatham, TN Davidson; TN Dickson; TN Robertson; TN Rutherford; TN Sumner; TN Williamson; TN Wilson.
Non-SMSA Counties 12.0
KY Allen; KY Barren; KY Butler; KY Clinton; KY Cumberland; KY Edmonson; KY Logan; KY Metcalfe; KY Monroe; KY Simpson; KY Todd; KY Trigg; KY Warren; TN Bedford; TN Cannon; TN Clay; TN Coffee; TN DeKalb; TN Franklin; TN Giles; TN Hickman; TN Houston; TN Humphreys; TN Jackson; TN Lawrence; TN Lewis; TN Macon; TN Marshall; TN Maury; TN Moore; TN Overton; TN Perry; TN Pickett;

TN Putnam; TN Smith; TN Stewart; TN Trousdale; TN Van Buren; TN Warren; TN Wayne; TN White.

055 Memphis, TN:
SMSA Counties:
4920 Memphis, TN-AR-MS 32.3
AR Critteriden; MS Do Soto; TN Shelby; TN Tipton.
Non-SMSA Counties 26.5
AR Clay; AR Craighead; AR Cross; AR Greene; AR Lawrence; AR Lee; AR Mississippi; AR Phillips; AR. Poinsett; AR Randolph; AR St. Francis; MS Alcorn; MS Benton; MS Bolivar; MS Calhoun; MS Carroll; MS Chickasaw, MS Clay; MS Coahoma; MS Grenada; MS ltawamba; MS Lafayette; MS Lee; MS Leflore; MS Marshall; MS Monroe; MS Montgomery; MS Panola; MS Pontotoc; MS Prentiss; MS Quitman; MS Sunflower; MS Tallahatchie; MS Tate; MS Tippah; MS Tishomingo; MS Union; MS Washington; MS Webster. MS Yalobusha; MO Dunklin; MO New Madrid; MO Pemiscot; TN Benton; TN Carroll; TN Chester; TN Crockett; TN Decatur; TN Dyer; TN Fayette; TN Gibson; TN Hardeman; TN Hardin; TN Haywood; TN Henderson; TN Henry; TN Lake; TN Lauderdale; TN McNairy; TN Madison; TN Obion; TN Weakley.

Kentucky:

056 Paducah, KY:
Non-SMSA Counties 5.2
IL Hardin; IL Massac; IL Pope; KY Ballard; KY Caldwell; KY Calloway. KY Carlisle; KY Crittenden; KY Fulton; KY Graves; KY Hickman; KY Livingston; KY Lyon. KY McCracken; KY Marshall.

057 Louisville, KY:
SMSA Counties:
4520 Louisville, KY-IN 11.2
IN Clark; IN Floyd; KY Bullitt; KY Jefferson; KY Oldham.
Non-SMSA Counties 9.6
IN Crawford; IN Harrison; IN Jefferson; IN Orange; IN Scott; IN Washington; KY Breckinridge; KY Grayson; KY Hardin; KY Hart; KY Henry; KY Larue; KY Marion; KY Meade; KY Nelson; KY Shelby; KY Spencer; KY Trimble; KY Washington.

058 Lexington, KY
SMSA Counties
4280 Lexington-Fayette, KY 10.8
KY Bourbon; KY Clark; KY Fayette; KY Jessamine; KY Scott; KY Woodford.
Non-SMSA Counties 7.0
KY Adair KY Anderson; KY Bath; KY Boyle; KY Breathitt; KY Casey; KY Clay; KY Estill; KY Franklin; KY Garrard; KY Green; KY Harrison; KY Jackson; KY Knott; KY Lee; KY Leslie; KY Letcher; KY Lincoln; KY Madison; KY Magoffin; KY Menifee; KY Mercer; KY Montgomery; KY Morgan. KY Nicholas; KY Owsley; KY Perry; KY Powell; KY Pulaski; KY Rockcastle; KY Russell; KY Taylor; KY Wolfe.

West Virginia:

059 Huntington, WV:
SMSA Counties:
3400 Huntington – Ashland, WV-KY-OH 2.9
KY Boyd; KY Greenup; OH Lawrence; WV Cabell; WV Wayne.
Non-SMSA Counties 2.5
KY Carter; KY Elliott; KY Floyd; KY Johnson; KY Lawrence; KY Martin; KY Pike; KY Rowan; OH Gallia; WV Lincoln; WV Logan; WV Mason; WV Mingo.

060 Charleston, WV
SMSA Counties:

1480 Charleston, WV 4.9
WV Kanawha; WV Putnam.
Non-SMSA Counties 4.2
WV Boone; WV Braxton; WV Calhoun; WV Clay; Fayette; WV Gilmer; WV Greenbrier; WV Jackson; WV Monroe; WV Nicholas; WV Pocahontas; WV Raleigh; WV Roane; WV Summers; WV Webster; WV Wyoming.
061 Morgantown-Fairmont; WV:
Non-SMSA Counties 2.1
WV Barbour; WV Doddridge; WV Harrison; WV Lewis; WV Marion; WV Monongalia; WV Preston; WV Randolph; WV Taylor; WV Tucker, WV Upshur.
062 Parkersburg, WV:
SMSA Counties:
6020 Parkersburg-Marietta. WV-OH 1.1
OH Washington; WV Wirt; WV Wood.
Non-SMSA Counties 1.2
WV Pleasants; WV Ritchie.
063 Wheeling - Steubenville - Wierton, WV-OH:
SMSA Counties:
8080 Steubenville-Wierton, OH-WV 4.3
OH Jefferson; WV Brooke; WV Hancock.
9000 Wheeling, WV-OH 2.4
OH Belmont; WV Marshall; WV Ohio.
Non-SMSA Counties 3.0
OH Harrison; OH Monroe; WV Tyler; WV Wetzel.

Ohio:

064 Youngstown-Warren, OH:
SMSA Counties:
9320 Youngstown-Warren, OH 9.4
OH Mahoning; OH Trumbull.
NonSMSA Counties 6.7
OH Columbiana; PA Lawrence; PA Mercer.
065 Cleveland, OH:
SMSA Counties:
0080 Akron, OH 7.8
OH Portage; OH Summit.
1320 Canton, OH 6.1
OH Carroll; OH Stark.
1680 Cleveland, OH 16.1
OH Cuyahoga; OH Geauga; OH Lake; OH Medina.
4440 Lorain-Elyria, OH 9.3
OH Lorain.
4800 Mansfield, OH 6.3
OH Richland.
Non-SMSA Counties:
OH Ashland; OH Ashtabula; OH Coshocton; OH Crawford; OH Erie; OH Holmes; OH Huron; OH Tuscarawas; OH Wayne.
066 Columbus, OH:
SMSA Counties:
1840 Columbus, OH 10.6
OH Delaware; OH Fairfield; Franklin; OH Madison; OH Pickaway.
Non-SMSA Counties 7.3
OH Athens; OH Fayette; OH Guernsey; OH Hocking; OH Jackson; OH Knox; OH Licking; OH Marion; OH Meigs; OH Morgan; OH Morrow; OH Muskingum; OH Noble; OH Perry OH Pike; OH Ross; OH Scioto; OH Union; OH Vinton.
067 Cincinnati, OH:
SMSA Counties:

1640 Cincinnati, OH-KY-IN 11.0
IN Dearborn; KY Boone; KY Campbell; KY Kenton; OH Clermont;
OH Hamilton; OH Warren.
3200 Hamilton-Middletown, OH 5.0
OH Butler.
Non-SMSA Counties 9.2
IN Franklin; IN Ohio; IN Ripley; IN Switzerland; KY Bracken; KY Carroll;
KY Fleming; KY Gallatin; KY Grant; KY Lewis; KY Mason; KY Owen; KY Pendleton;
KY Robertson; OH Adams; OH Brown; OH Clinton; OH Highland.

068 Dayton, OH:
SMSA Counties:
2000 Dayton, OH 11.5
OH Greene; ON Miami; OH Montgomery; OH Preble.
7960 Springfield, OH 7.8
OH Champaign; OH Clark.
Non-SMSA Counties 9.9
OH Darke; OH Logan; ON Shelby.

069 Lima, OH:
SMSA Counties:
4320 Lima, OH 4.4
OH Allen; OH Auglaize; OH Putnam; OH Van Wert.
Non-SMSA Counties 3.5
OH Hardin; OH Mercer.

070 Toledo, OH:
SMSA Counties:
8400 Toledo, OH-MI 8.8
MI Monroe; OH Fulton; OH Lucas; OH Ottawa; OH Wood.
Non-SMSA Counties 7.3
MI Lenawee; OH Hancock; OH Henry; OH Sandusky; OH Seneca; OH Wyandot.

Michigan:

071 Detroit, MI:,
SMSA Counties:
0440 Ann Arbor, MI 8.5
MI Washtenaw.
2160 Detroit, MI 17.7
MI Lapeer; MI Livingston; Ml Macomb; MI Oakland; MI St. Clair; Mi Wayne.
2640 Flint, MI 12.6
MI Genesee; MI Shiawassee.
Non-SMSA Counties 16.7
MI Sanilac.

072 Saginaw, MI:
SMSA Counties:
0800 Bay City, MI 2.2
MI Bay.
6960 Saginaw, MI 14.3
MI Saginaw.
Non-SMSA Counties 5.2
MI Alcona; MI Alpena; MI Arenac; MI Cheboygan; MI Chippewa; MI Clare;
MI Crawford; MI Gladwin; MI Gratiot; MI Huron; MI losco; MI Isabella; MI Luce;
MI Mackinac; MI Midland; MI Montmorency; MI Ogemaw; MI Oscoda; MI Otsego;
MI Presque Isle; MI Roscommon; MI Tuscola.

073 Grand Rapids, MI:
SMSA Counties:
3000 Grand Rapids, MI 5.2
MI Kent; MI Ottawa.

5320 Muskegon - Norton Shores - Muskegon Heights, MI 9.7
MI Muskegon; MI Oceana.
Non-SMSA Counties 4.9
MI Allegan; MI Antrim; MI Benzie; MI Charlevoix; MI Emmet; MI Grand Traverse; MI Kalkaska; MI Lake; MI Leelanau; MI Manistee; MI Mason; MI Mecosta; MI Missaukee; MI Montcalm; MI Newaygo; MI Osceola; MI Wexford.

074 Lansing - Kalamazoo, MI:
SMSA Counties:
0780 Battle Creek, MI 7.2
MI Barry; MI Calhoun.
3520 Jackson, MI 5.1
MI Jackson.
3720 Kalamazoo-Portage, MI 5.9
MI Kalamazoo; MI Van Buren.
4040 Lansing-East Lansing, MI 5.5
MI Clinton; MI Eaton; MI Ingham; MI Ionia.
Non-SMSA Counties 5.5
MI Branch; MI Hillsdale.

Indiana:

075 South Bend, IN:
SMSA Counties:
7800 South Bend, IN 7.1
IN Marshall; IN St. Joseph,
2330 Elkhart IN 4.0
IN Elkhart.
Non-SMSA Counties 6.2
IN Fulton; IN Kosciusko; IN Lagrange; MI Berrien; MI Cass; MI St. Joseph.

076 Fort Wayne, IN:
Non-SMSA Counties 4.4
IN Allen; IN Dekalb; IN Wells; IN Huntington; IN Noble; IN Steuben; IN Whitley; OH Defiance; OH Paulding; OH Williams.

077 Kokomo-Marion, IN:
SMSA Counties:
3850 Kokomo, IN 4.4
IN Howard; IN Tipton.
Non-SMSA Counties 3.7
IN Cass; IN Grant; IN Miami; IN Wabash.

078 Anderson-Muncie, IN:
SMSA Counties:
0400 Anderson, IN 4.9
IN Madison.
5280 Muncie, IN 5.3
IN Delaware.
Non-SMSA Counties 3.9
IN Blackford; IN Fayette; IN Henry; IN Jay; IN Randolph; IN Union; IN Wayne.

079 Indianapolis, IN:
SMSA Counties:
1020 Bloomington, IN 3.1
IN Monroe.
3480 Indianapolis, IN 12.5
IN Boone; IN Hamilton; IN Hendricks; IN Johnson; IN Marion; IN Morgan; IN Shelby.
Non-SMSA Counties 9.7
IN Bartholomew; IN Brown; IN Daviess; IN Decatur; IN Greene; IN Jackson; IN Jennings; IN Lawrence; IN Martin; IN Owen; IN Putnam; IN Rush.

080 Evansville, IN:
SMSA Counties
2440 Evansville, IN-KY 4.8
IN Gibson; IN Posey; IN Vanderburgh; IN Warrick; KY Henderson.
5990 Owensboro, KY 4.7
KY Daviess.
Non-SMSA Counties 3.5
IL Edwards; IL Gallatin; IL Hamilton; IL Lawrence; IL Saline; IL Wabash; IL White; IN Dubois; IN Knox; IN Perry; IN Pike; IN Spencer; KY Hancock; KY Hopkins; KY McLean; KY Muhlenberg; KY Ohio; KY Union; KY Webster.

081 Terre Haute, IN:
SMSA Counties:
8320 Terre Haute, IN 3.1
IN Clay; IN Sullivan; IN Vermillion; IN Vigo.
Non-SMSA Counties 2.5
IL Clark; IL Crawford; IN Parke.

082 Lafayette, IN:
SMSA Counties:
3920 Lafayette - West Lafayette, IN 2.7
IN Tippecanoe.
Non-SMSA Counties 1.5
IN Benton; IN Carroll; IN Clinton; IN Fountain; IN Montgomery; IN Warren; IN White.

Illinois:

083 Chicago, IL:
SMSA Counties:
1600 Chicago, IL 19.6
IL Cook; IL Du Page; IL Kane; IL Lake; IL McHenry; IL Will.
2960 Gary - Hammond - East Chicago, IN 20.9
IN Lake; IN Porter.
3740 Kankakee. IL 9.1
IL Kankakee.
3800 Kensoha, WI 3.0
WI Kenosha.
Non-SMSA Counties 18.4
IL Bureau; IL De Kalb; IL Grundy; IL Iroquois; IL Kendall; IL La Salle; IL Livingston; IL Putnam; IL Jasper; IN Laporte; IN Newton; IN Pulaski; IN Starke.

084 Champaign-Urbana, IL:
SMSA Counties:
1400 Champaign - Urbana – Rantoul, IL 7.8
IL Champaign.
Non-SMSA Counties 4.8
IL Coles; IL Cumberland; IL Douglas; IL Edgar; IL Ford; IL Platt; IL Vermilion.

085 Springfield-Decatur, IL:
SMSA Counties:
2040 Decatur, IL 7.6
IL Macon.
7880 Springfield, IL 4.5
IL Menard; IL Sangamon.
Non-SMSA Counties 4.0
IL Cass; IL Christian; IL De Witt; IL Logan; IL Morgan; IL Moultrie; IL Scott; IL Shelby.

086 Quincy, IL:
Non-SMSA Counties 3.1
IL Adams; IL Brown; IL Pike; MO Lewis; MO Marlon; MO Pike; MO Rails.

087 Peoria, IL:
SMSA Counties
1040 Bloomington - Normal, IL 2.5
IL McLean.
8120 Peoria, IL 4.4
IL Peoria; IL Tazewell; IL Woodford.
Non-SMSA Counties 3.3
IL Fulton; IL Knox; IL McDonough; IL Marshall; IL Mason; IL Schuyler; IL Stark; IL Warren.
088 Rockford, IL:
SMSA Counties:
6880 Rockford, IL 6.3
IL Boone; IL Winnegago.
3620 Janesville - Beloit WI 3.1
WI Rock
Non-SMSA Counties 4.6
IL Lee; IL Ogle; IL Stephenson.

Wisconsin:

089 Milwaukee, WI:
SMSA Counties:
5080 Milwaukee, WI 8.0
WI Milwaukee; WI Ozaukee; WI Washington; WI Waukesha.
6600 Racine, WI 8.4
WI Racine.
Non-SMSA Counties 7.0
WI Dodge; WI Jefferson; WI Sheboygan; WI Walworth.
090 Madison, WI:
SMSA Counties:
4720 Madison, WI 2.2
WI Dane.
Non-SMSA Counties 1.7
WI Adams; WI Columbia; Wl Green; WI Iowa; WI Marquette; Wl Richland; WI Sauk.
091 La Crosse, WI:
SMSA Counties:
3870 LaCrosse. WI 0.9
Non-SMSA Counties 0.6
MN Houston; MN Winona; WI Buffalo; WI Jackson; WI Juneau; WI Monroe; WI Trempealeau; WI Vernon.
092 Eau Claire, WI:
SMSA Counties:
2290 Eau Claire, WI 0.5
WI Chippewa; WI Eau Claire.
Non-SMSA Counties 0.6
Wl Barron; WI Dunn; WI Pepin; WI Rusk; WI Sawyer; WI Washburn.
093 Wausau, WI:
Non-SMSA Counties 0.6
WI Clark; WI Langlade; WI Lincoln; WI Marathon; WI Oneida; WI Portage; WI Price; WI Taylor; WI Vilas; WI Wood.
094 Appleton - Green Bay - Oshkosh, WI:
SMSA Counties:
0460 Appleton-Oshkosh, WI 0.9
WI Calumet; WI Outaramie; WI Winnebago.
3080 Green Bay, WI 1.3
WI Brown.

Non-SMSA Counties 1.0
MI Alger; MI Baraga; MI Delta; MI Dickinson; MI Houghton; MI Iron;
MI Keweenaw; MI Marquette; MI Menominee; MI Schoolcraft; WI Door;
WI Florence; WI Fond Du Lac; WI Forest WI Green Lake; WI Kewaunea;
WI Manitowoc; WI Marinette; WI Menominee; WI Oconto; WI Shawano;
WI Waupaca; Waushara.

095 Duluth, MN:
SMSA Counties:
2240 Duluth - Superior, MN-WI 1.0
MN St Louis; Wl Douglas.
Non-SMSA Counties 1.2
MI Gogebic; MI Ontonagon; MN Carlton; MN Cook; MN Itasca; MN Koochiching;
MN Lake; WI Ashland; W! Bayfield; WI Iron.

Minnesota:

096 Minneapolis-St. Paul, MN:
SMSA Counties:
5120 Minneapolis-St. Paul, MN-WI 2.9
MN Anoka; MN Carver; MN Chisago; MN Dakota; MN Hennepin; MN Ramsey;
MN Scott; MN Washington; MN Wright; MN St. Croix.
6980 St. Cloud, MN 0.5
MN Benton; MN Sherburne; MN Stearns.
Non-SMSA Counties 2.2
MN Aitkin; MN Big Stone; MN Blue Earth; MN Brown; MN Cass; MN Chippewa;
MN Crow Wing; MN Douglas; MN Faribault; MN Goodhue; MN Grant; MN Isanti;
MN Kanabec; MN Kandiyohi; MN Lac Qui Parle; MN Le Sueur; MN McLeod;
MN Martin; MN Meeker; MN Mille Lacs; MN Mornson; MN Nicollet; MN Pine;
MN Pope; MN Renville; MN Rice; MN Sibley; MN Stevens; MN Swift; MN Todd;
MN Traverse; MN Wadena; MN Waseca; MN Watonwan; MN Yellow Medicine;
WI Burnett; WI Pierce; WI Polk.

097 Rochester, MN:
SMSA Counties:
6820 Rochester, MN 1.4
MN Olmsted.
Non-SMSA Counties 0.9
MN Dodge; MN Fillmore; MN Freeborn; MN Mower; MN Steele; MN Wabasha.

Iowa:

098 Dubuque, IA:
SMSA Counties:
2200 Dubuque, IA 0.6
IA Dubuque
Non-SMSA Counties 0.5
IL Jo Daviess; IA Allamakee; IA Clayton; IA Delaware, IA Jackson;
IA Winneshiek; WI Crawford; WI Grant; Wl Lafayette.

099 Davenport-Rock Island-Moline, IA-IL:
SMSA Counties:
1960 Davenport-Rock Island-Moline, IA-IL 4.6
IL Henry; IL Rock Island; IA Scott.
Non-SMSA Counties 3.4
IL Carroll; IL Handcock; IL Henderson; IL Mercer; IL Whiteside; IA Clinton;
IA Des Moines; IA Henry; IA Lee; IA Louisa; IA Muscatine; MO Clark.

100 Cedar Rapids, IA:
SMSA Counties:
1360 Cedar Rapids, IA 1.7
IA Linn.
Non-SMSA Counties 1.5

IA Benton; IA Cedar; IA Iowa; IA Johnson; IA Jones; IA Washington.

101 Waterloo, IA:
SMSA Counties:
8920 Waterloo-Cedar Falls, IA 4.7
IA Black Hawk.
Non-SMSA Counties 2.0
IA Bremer; IA Buchanan; IA Butler; IA Cerro Gordo; IA Chickasaw; IA Fayette; IA Floyd; IA Franklin; IA Grundv; IA Hancock; IA Hardin; IA Howard; IA Mitchell; IA Winnegago; IA Worth.

102 Fort Dodge, IA:
Non-SMSA Counties 0.4
IA Bueno Vista; IA Calhoun; IA Carroll; IA Clay; IA Dickinson; IA Emmet; IA Greene; IA Hamilton; IA Humboldt; IA Kossuth; IA Palo Alto; IA Pocahontas; IA Sac; IA Webster; IA Wright.

103 Sioux City, IA:
SMSA Counties:
7720 Sioux City, IA-NE 1.9
IA Woodbury; NE Dakota.
Non-SMSA Counties 1.2
IA Cherokee, IA Crawford; IA Ida; IA Monona; IA O'Brien; IA Plymouth; IA. Sioux; NE Antelope; NE Cedar; NE Cuminq; NE Dixon; NE Knox; NE Madison; NE Pierce; NE Stanton; NE Thurston; NE Wayne; SD Bon Homme; SD Clay; SD Union; SD Yankton.

104 Des Moines, IA:
SMSA Counties:
2120 Des Moines, IA 4.5
IA Polk; IA Warren.
Non-SMSA Counties 2.4
IA Adair; IA Appanoose; IA Boone; IA Clarke; IA Dallas; IA Davis; IA Decatur; IA Guthrie; IA Jasper; IA Jefferson; IA Keokuk; IA Lucas; IA Madison; IA Mahaska; IA Marion; IA Marshall; IA Monroe; IA Poweshiek; IA Ringgold; IA Story; IA Tama; IA Union; IA Van Buren; IA Wapello; IA Wayne.

Missouri:

105 Kansas City, MO:
SMSA Counties:
3760 Kansas City, MO-KS 12.7
KS Johnson; KS Wayandotte; MO Cass; MO Clay; MO Jackson; MO Platte; MO Ray.
4150 Lawrence, KS 7.2
7000 St Joseph. MO 3.2
MO Andrew; MO Buchanan.
Non-SMSA Counties 10.0
KS Anderson; KS Atchison; KS Brown; KS Doniphan; KS Franklin; KS Leavenworth; KS Linn; KS Miami; MO Atchison; MO Bates; MO Benton; MO Caldwell; MO Caroll; MO Clinton; MO Daviess; MO Dekalb; MO Gentry; MO Grundy; MO Harrison; MO Henry; MO Holt; MO Johnson; MO Lafayette; MO Livingston; MO Mercer; MO Nodaway; MO Pettis; MO Saline; MO Worth.

106 Columbia, MO:
SMSA Counties:
1740 Columbia, MO; MO Boone 6.3
Non-SMSA Counties 4.0
MO Adair; MO Audrain; MO Callaway; MO Camden; MO Chariton; MO Cole; MO Cooper; MO Howard; MO Knox; MO Linn;. MO Macon; MO Miller; MO Moniteau; MO Monroe; MO Morgan; MO Osage; MO Putnam; MO Randolph; MO Schuyler; MO Scotland; MO Shelby; MO Sullivan.

107 St. Louis, MO:
SMSA Counties:
7040 St. Louis, MO-IL 14.7
IL Clinton; IL Madison; IL Monroe; IL St. Clair; MO Franklin; MO Jefferson; MO St. Charles; MO St. Louis; MO St. Louis City.
Non-SMSA Counties 11.4
IL Alexander IL Bond; IL Calhoun; IL Clay; IL Effingharn; IL Fayette; IL Franklin; IL Greene; IL Jackson; IL Jasper; IL Jefferson; IL Jersey; IL Johnson; IL Macoupin; IL Marion; IL Montgomery; IL Perry; IL Pulaski; IL Randolph; IL Richland; IL Union; IL Washington; IL Wayne; IL Williamson; MO Bollinger; MO Butler; MO Cape Girardeau; MO Carter; MO Crawford; MO Dent; MO Gasconade; MO Iron; MO Lincoln; MO Madison; MO Maries; Mississippi; MO Montgomery; MO Perry; MO Phelps; MO Reynolds; MO Ripley; MO St. Francis; MO Ste. Genevieve; MO Scott; MO Stoddard; MO Warren; MO Washington; MO Wayne.

108 Springfield, MO:
SMSA Counties:
7920 Springfield, MO 2.0
MO Christian; MO Greene.
Non-SMSA Counties 2.3
KS Allen; KS Bourbon; KS Cherokee; KS Crawford; KS Labette; KS Montgomery; KS Neosho; KS Wilson; KS Woodson; MO Barry; MO Barton; MO Cedar; MO Dade; MO Dallas;.MO Douglas; MO Hickory; MO Howell; MO Jasper; MO Laclede; MO Lawrence; MO McDonald; MO Newton; MO Oregon; MO Ozark; MO Polk; MO Pulaski; MO St. Clair; MO Shannon; MO Stone; MO Taney; MO Texas; MO Vernon; MO Webster; MO Wright; OK Craig; OK Ottawa.

Arkansas:

109 Fayetteville, AR:
Non-SMSA Counties 3.3
AR Baxter; AR Benton; AR Boone; AR Carroll; AR Madison; AR Marion; AR Newton; AR Searcy; AR Washington; OK Adair; OK Delaware.

110 Fort Smith, AR:
SMSA Counties:
2720 Fort Smith, AR-OK 5.6
AR Crawford; AR Sebastian; OK Le Flore; OK Sequoyah.
Non-SMSA Counties 6.6
AR Franklin; AR Logan; AR Polk; AR Scott; OK Choctaw; OK Haskell; OK Latimer; OK McCurtain; OK Pittsburg; OK Pushmataha.

111 Little Rock-North Little Rock, AR:
SMSA Counties:
4400 Little Rock-North Little Rock, AR 15.7
AR Pulaski; AR Saline.
6240 Pine Bluff, AR 31.2
AR Jefferson
Non-SMSA Counties 16.4
AR Arkansas; AR Ashley; AR Bradley; AR Calhoun; AR Chicott; AR Clark; AR Calhoun; AR Cleveland; AR Conway; AR Dallas; AR Desha; AR Drew; AR Faulkner; AR Fulton: AR Garland; AR Grant; AR Hot Springs; AR Independence; AR Izard; AR Jackson; AR Johnson; AR Lincoln; AR Lonoke; AR Monroe; AR Montgomery; AR Ouachita; AR Perry, AR Pope; AR Prairie; AR Sharp; AR Stone; AR Union; AR Van Buren; AR While; AR Woodruft; AR Yell.

Mississippi:

112 Jackson, MS:
SMSA Counties;
3560 Jackson, MS 30.3
MS Hinds; MS Rankin.
Non-SMSA Counties 32.0
MS Attala; MS Choctaw; MS Choctaw; MS Clarke; MS Copiah;
MS Covington; MS Franklin; MS Holmes: MS Humphreys; MS Issaquena;
MS Jasper; MS Jefferson; MS Jefferson Davis; MS Jones; MS Kemper;
MS Lauderdale; MS Lawrence; MS Leake; MS Lincoln; MS Lowndes;
MS Madison; MS Neshoba; MS Newton; MS Noxubee; MS Oktibbeha;
MS Scott; MS Sharkey; MS Simpson; MS Smith; MS Warren; MS Wayne;
MS Winston; MS Yazoo.

Louisiana:

113 New Orleans, LA:
SMSA Counties
0920 Biloxi-Gulfport, MS 19.2
MS Hancock; MS Harrison; MS Stone.
5560 New Orleans, LA 31.0
LA Jefferson; LA Orleans; LA St. Bernard; LA St. Tammany.
Non-SMSA Counties 27.7
LA Assumption; LA Lafourche; LA Plaquemines; LA St. Charles; LA St. James;
LA St. John The Baptist; LA Tangipahoa; LA Terrebonne; LA Washington; MS Forrest;
MS Lamar; MS Marion; MS Pearl River; MS Perry; MS Pike; MS Walthall.
114 Baton Rouge, LA:
SMSA Counties:
0760 Baton Rouge, LA 26.1
LA Ascension; LA East Baton Rouge; LA Livingston; LA West Baton Rouge.
Non-SMSA Counties 30.4
LA Concordia; LA E. Feliciana; LA Iberville; LA Pointe Coupee; LA St. Helena;
LA West Feliciana; MS Adams; MS Amite; MS Wilkinson.
115 Lafayette, LA:
SMSA Counties:
3880 Lafayette, LA 20.6
LA Lafayette.
Non-SMSA Counties 24.1.
LA Acadia; LA Evangeline; LA Iberia; LA St. Landry; LA St. Martin;
LA St. Mary; LA Vermillion.
116 Lake Charles, LA:
SMSA Counties:
3960 Lake Charles, LA 19.3
LA Calcasieu.
Non-SMSA Counties 17.8
LA Allen; LA Beauregard; LA Cameron; LA Jefferson Davis LA Vernon.
117 Shreveport, LA:
SMSA Counties:
0220 Alexandria, LA 25.7
LA Grant; LA Rapides.
7680 Shreveport, LA 29.3
LA Bossier; LA Caddo; LA Webster.
Non-SMSA Counties 29.3
LA Avoyelles; LA Bienville; LA Claiborne; LA De Soto; LA Natchitoches;
LA Red River; LA Sabine; LA Winn.

118 Monroe, LA:
SMSA Counties:
5200 Monroe, LA 22.8
LA Ouachita.
Non-SMSA Counties 27.9
LA Caldwell; LA Catahoula; LA East Carroll; LA Franklin; LA Jackson; LA La Salle; LA Lincoln; LA Madison; LA Morehouse; LA Richland; LA Tensas; LA Union; LA West Carroll.

Texas:

119 Texarkana, TX:
SMSA Counties:
8360 Texarkana, TX-Texarkana, AR 19.7
AR Little River; AR Miller; TX Bowie.
Non-SMSA Counties 20.2
AR Columbia; AR Hempstead; AR Howard; AR Lafayette; AR Nevada; AR Pike; AR Sevier; TX Camp; TX Cass; TX Lamar; TX Morris; TX Red River; TX Titus.
120 Tyler-Longview, TX:
SMSA Counties:
4420 Longview, TX 22.8
TX Gregg; TX Harrison.
8640 Tyler, TX 23.5
TX Smith.
Non-SMSA Counties 22.5
TX Anderson; TX Angelina; TX Cherokee; TX Henderson; TX Houston; TX Marion; TX Nacogdoches; TX Panola; TX Rusk; TX San Augustine; TX Shelby; TX Upshur; TX Wood.
121 Beaumont-Port Arthur, TX:
SMSA Counties:
0840 Beaumont-Port Arthur Orange, TX 22.6
TX Hardin; TX Jefferson; TX Orange.
Non-SMSA Counties 22.6
TX Jasper; TX Newton; TX Sabine; TX Tyler.
122 Houston, TX:
SMSA Counties
1260 Bryan-College Station, TX 23.7
TX Brazos.
2920 Galveston-Texas City, TX 28.9
TX Galveston.
3360 Houston, TX 27.3
TX Brazona; TX Fort Bend; TX Harris; TX Liberty, TX Montgomery, TX Waller.
Non-SMSA Counties 27.4
TX Austin; TX Burleson; TX Calhoun; TX Chambers; TX Colorado; TX De Witt; TX Fayette; TX Goliad; TX Grimes; TX Jackson; TX Lavaca; TX Leon; TX Madison; TX Matagorda; TX Polk; TX Robertson; TX San Jacinto; TX Trinity; TX Victoria; TX Walker; TX Washington; TX Wharton.
123 Austin, TX:
SMSA Counties:
0640 Austin, TX 24.1
TX Hays; TX Travis; TX Williamson.
Non-SMSA Counties 24.2
TX Bastrop; TX Blanco; TX Burnet; TX Caldwell; TX Lee; TX Llano.
124 Waco-Killeen-Temple, TX:
SMSA Counties:
3810 Killeen-Temple, TX. 16.4
TX Belt TX Coryall.
8800 Waco, TX 20.7
TX McLermarx

Non-SMSA Counties 18.6
TX Bosque; TX Falls; TX Freestone; TX Hamilton; TX Hill; TX Lampasas; TX Limestone; TX Milam; TX Mills.

125 Dallas-Fort Worth, TX:
SMSA Counties
1920 Dallas-Fort Worth, TX 18.2
TX Collier; TX Dallas; TX Denton; TX Ellis; TX Hood; TX Johnson; TX Kaufman; TX Parker; TX Rockwall; TX Tarrant; TX Wise.
7640 Sherman-Denison, TX 9.4
TX Grayson.
Non-SMSA Counties 17.2
OK Bryan; TX Cooke; TX Delta; TX Erath; TX Fannin; TX Franklin; TX Hopkins; TX Hunt; TX Jack; TX Montague; TX Navarro; TX Palo Pinto; TX Rains; TX Sommerveil; TX Van Zandt.

126 Wichita Falls, TX:
SMSA Counties:
9080 Wichita Falls, TX: 12.4
TX Clay; TX Wichita.
Non-SMSA Counties 11.0
TX Archer; TX Baylor; TX Cottle; TX Foard; TX Hardeman; TX Wilbarger; TX Young.

127 Abilene, TX:
SMSA Counties:
0040 Abilene, TX 11.6
TX Callahan; TX Jones; TX Taylor.
Non-SMSA Counties 10.9
TX Brown; TX Coleman; TX; Comanche; TX Eastland; TX Fisher; TX Haskell; TX Kent; TX Knox; TX Mitchell; TX Nolan; TX Scurry; TX Shackelford; TX Stephens; TX Stonewall; TX Throckmorton.

128 San Angelo, TX:
SMSA Counties:
7200 San Angelo, TX 19.2
TX Tom Green.
Non-SMSA Counties 20.0
TX Coke; TX Concha; TX Crockett; TX Irion; TX Kimble; TX McCulloch; TX Mason; TX Menard; TX Reagan; TX Runnels; TX San Saba; TX Schleicher; TX Sterling; TX Sutton, TX Terrell.

129 San Antonio, TX:
SMSA Counties:
4080 Laredo 87.3
TX Webb.
7240 San Antonio, TX 47.8
TX Bexar; TX Comal; TX Guadalupe.
Non-SMSA Counties 49.4
TX Atascosa; TX Bandera; TX Dimmit; TX Edwards; TX Frio; TX Gillespie; TX Gonzales; TX Jim Hogg; TX Karnes; TX Kendall; TX Kerr; TX Kinney; TX La Salle; TX McMullen; TX Maverick; TX Medina; TX Real; TX Uvalde; TX Val Verde; TX Wilson; TX Zapata; TX Zavala.

130 Corpus Christi, TX:
SMSA Counties:
1880 Corpus Christi, TX 41.7
TX Nueces; TX San Patricio.
Non-SMSA Counties 44.2
TX Aransas; TX Bee; TX Brooks; TX Duval; TX Jim Wells; TX Kenady; TX Kyberg; TX Live Oak; TX Refugio.

131 Brownsville-McAllen-Harlingen, TX:
SMSA Counties:
1240 Brownsville-Harlingen-San Benito, TX 71.0
TX Cameron.
4880 McAllen-Pharr-Edinburg, TX 72.8

TX Hidalgo.
Non-SMSA Counties 72.9
TX Starr; TX Willacy.
132 Odessa-Midland, TX:
SMSA Counties:
5040 Midland, TX 19.1
TX Midland.
5800 Odessa, TX 15.1
TX Ector.
Non-SMSA Counties 18.9
TX Andrews; TX Crane; TX Glasscock; TX Howard; TX Loving; TX Martin; TX Pecos; TX Reeves; TX Upton; TX Ward; TX Winkler.
133 El Paso, TX:
SMSA Counties:
2320 El Paso, TX 57.8
TX El Paso.
Non-SMSA Counties 49.0
NM Chaves; NM Dona Ana; NM Eddy; NM Grant; NM Hidalgo; NM Luna; NM Otero; NM Sierra, TX Brewster; TX Culberson; TX Hudspeth; TX Jeff Davis; TX Presidio.
134 Lubbock, TX:
SMSA Counties:
4600 Lubbock 19.6
TX Lubbock.
Non-SMSA 19.5
NM Lea; NM Roosevelt ; TX Bailey; TX Borden; TX Cochran; TX Crosby; TX Dawson; TX Dickens; TX Floyd; TX Gaines; TX Garza; TX Hale; TX Hockley; TX King; TX Lamb; TX Lynn; TX Motley; TX Terry; TX Yoakum.
135 Amarillo, TX:
SMSA Counties:
0320 Amarillo, TX 9.3
TX Potter; TX Randall.
Non-SMSA Counties 11.0
NM Curry; NM Harding; NM Quay; NM Union; OK Beaver; OK Cimarron; OK Texas; TX Arnstrong; TX Briscoe; TX Carson; TX Castro; TX Childress; TX Collingsworth; TX Dallam; TX Deaf Srnith; TX Donley; TX Gray; TX Hall; TX Hansford; TX Hartley; TX Hemphill; TX Hutchinson; TX Lipscomb; TX Moore; TX Ochitree; TX Oldham; TX Parmer; TX Roberts; TX Sherman; TX Swisher; TX Wheeler.

Oklahoma:

136 Lawton, OK:
SMSA Counties:
4200 Lawton, OK 14.8
OK Comanche.
Non-SMSA Counties 10.8
OK Cotton; OK Green; OK. Harmon; OK Jackson; OK Jefferson; OK Kiowa; OK Stephens; OK Tillman.
137 Oklahoma City, OK:
SMSA Counties
5880 Oklahoma City, OK 10.2
OK Canadian; OK Cleveland; OK McClain; OK Oklahoma; OK Pottawatomie.
Non-SMSA Counties 9.0
OK Alfalfa; OK Atoka; OK Beckham; OK Blaine; OK Caddo; OK Carter; OK Coat; OK Custer; OK Dewey; OK Ellis; OK Garfield; OK Garvin; OK Grady; OK Grant; OK Harper; OK Hughes; OK Johnston; OK Kingfisher; OK Lincoln; OK Logan; OK Love; OK Major; OK Marshall; OK Murray, OK Okfuskee; OK Pontotoc; OK Roger Mills; OK Seminole; OK Washita; OK Woods; Ok Woodward.

138 Tulsa, OK:
SMSA Counties:
8560 Tulsa, OK ____ 10.2
OK Creek; OK Mayes; OK Osage; OK Rogers; OK Tulsa; OK Wagoner.
Non-SMSA Counties ____ 10.0
OK Cherokee; OK Key; OK McIntosh; OK Muskogee; OK Noble; OK Nowata; OK Okmulgee; OK Pawnee; OK Payne; OK Washington.

Kansas:

139 Wichita, KS:
SMSA Counties:
9040 Wichita, KS ____ 7.9
KS Butler; KS Sedgwick.
Non-SMSA Counties ____ 5.7
KS Barber; KS Barton; KS Chase; KS Chautauqua; KS Clark; KS Comanche. KS Cowley; KS Edwards; KS Elk; KS Finney; KS Ford; KS Grant; KS Gray; KS Greeley; KS Greenwood; KS Hamilton; KS Harper; KS Harvey; KS Haskell; KS Hodgeman; KS Kearny; KS Kingman; KS Kiowa; KS Lane; KS McPherson; KS Marion; KS Meade; KS Morton; KS Ness; KS Pawnee; KS Pratt; KS Reno; KS Rice; KS Rush; KS Scott; KS Seward; KS Stafford; KS Stanton; KS Stevens; KS Sumner, KS Wichita.
140 Salina, KS:
Non-SMSA Counties ____ 1.5
KS Cheyenne; KS Cloud; KS Decatur; KS Dickinson; KS Ellis; KS Ellsworth; KS Gove; KS Graham; KS Jewell; KS Lincoln; KS Logan; KS Mitchell; KS Norton; KS Osborne; KS Ottawa; KS Phillips; KS Rawlins; KS Republic; KS Rooks; KS Russell; KS Saline; KS Sheridan; KS Sherman; KS Smith; KS Thomas; KS Trego; KS Wallace.
141 Topeka, KS:
SMSA Counties:
8440 Topeka, KS ____ 9.0
KS Jefferson; KS Osage; KS Shawnee.
Non-SMSA Counties ____ 8.5
KS CIay; Coffey; KS Geary; KS Jackson; KS Lyon; KS Marshall; KS Morris; KS Nemaha; KS Pottawatomie, KS Riley; KS Wabaunsee; KS Washington.

Nebraska:

142 Lincoln, NE:
SMSA Counties:
4360 Lincoln, NE ____ 2.8
NE Lancaster.
Non SMSA Counties ____ 1.9
NE Butler; NE Fillmore; NE Gage; NE Jefferson; NE Johnson; NE Nemaha; NE Otoe; NE Pawnee; NE Polk; NE Richardson; NE Saline, NE Seward; NE Thayer; NE York.
143 Omaha, NE:
SMSA CountieS:
5920 Omaha, NE-IA ____ 7.6
IA Pottawattamie; NE Douglas; NE Sarpy.
Non-SMSA ____ 6.3
IA Adams; IA Audubon; IA Cass; IA Fremont; IA Harrison; LA Mills; IA Montgomery; IA Page; IA Shelby; IA Taylor; NE Burt; NE Cass; NE Colfax; NE Dodge; NE Platte; NE Saunders; NE Washington.
144 Grand Island, NE:
Non SMSA Counties ____ 1.4
NE Adams; NE Aurther; NE Blaine; NE Boyd; NE Brown; NE Buffalo; NE Chase; NE Cherry; NE Clay; NE Custer; NE Dawson; NE Dundy; NE Franklin; NE Frontier; NE Fumas; NE Garfield; NE Gosper; NE Grant; NE Greeley, NE Hall; NE Hamilton;

NE Harlan; NE Hayes; NE Hitchcock; NE Holt; NE Hooker; NE Howard; NE Kearney; NE Keith; NE Keya Paha; NE Lincoln; NE Logan; NE Loup; NE McPherson; NE Merrick; NE Nance; NE Nuckolls; NE Perkins; NE Phelps; NE Red Willow; NE Rock; NE Sherman; NE Thomas; NE Valley; NE Webster; NE Wheeler.

145 Scottsbluff, NE:
Non-SMSA Counties 5.3
NE Banner; NE Box Butt; NE Cheyenne; NE Dawes; NE Deuel; NE Garden; NE Kimball; NE Morrill; NE Scotts Buff; NE Sheridan; NE Sioux; NE Goshen.

South Dakota:

146 Rapid City, SD:
SMSA Counties:
6660 Rapid City, SD 3.4
SD Pennington; SD Meade.
Non-SMSA Counties 7.9
SD Bennett; SD Buffalo; SD Butte; SD Campbell; SD Corson; SD Custer; SD Dewey (Armstrong); SD Fall River; SD Haakon; SD Harding; SD Hughes; SD Hyde; SD Jackson; SD Jones; SD Lawrence; SD Lyman; SD Mellette; SD Perkins; SD Potter; SD Shannon (Washington); SD Stanley; SD Sully; SD Todd; SD Tripp; SD Walworth; SD Washabaugh; SD Ziebach; WY Crook; WY Niobrara; WY Weston.

147 Sioux Falls, SD:
SMSA Counties:
7760 Sioux Falls, SD 1.2
SD Minnehaha.
Non-SMSA Counties 0.8
IA Lyon; IA Osceola; MN Cottonwood; MN Jackson;. MN Lincoln; MN Lyon; MN Murray, MN Nobles; MN Pipestone; MN Redwood; MN Rock; SD Aurora; SD Beadle; SD Brookings; SD Brule; SD Charles Mix; SD Davison; SD Douglas; SD Gregory; SD Hand; SD Hanson; SD Hutchinson; SD Jerauld; SD Kingsbury; SD Lake; SD Lincoln; SD McCook, SD Miner, SD Moody, SD Sanborn; SD Turner.

148 Aberdeen, SD:
Non-SMSA Counties 1.3
SD Brown; SD Clark; SD Codington; SD Day; SD Deuel; SD Edmunds; SD Faulk; SD Grant; SD Hamlin; SD McPherson; SD Marshall; SD Roberts; SD Spink.

North Dakota:

149 Fargo-Moorhead, ND-MN:
Non-SMSA Counties 0.7
MN Becker MN Clay; MN Cass; MN Wilkin; ND Barnes; ND Dickey; ND Eddy; ND Foster; ND Griggs; ND La Moure; ND Logan; ND McIntosh; ND Ransom; ND Richland; ND Sargent; ND Steele; ND Stutsman; ND Traill.

150 Grand Forks, ND:
SMSA Counties:
2985 Grand Forks, ND-MN 1.2
MN Polk; ND Grand Forks.
Non-SMSA Counties 2.0
MN Beltrami; MN Clearwater MN Hubbard. MN Kittson; MN Lake of the Woods; MN Mahnomen; MN Marshall; MN Norman; MN Pennington; MN Red Lake; MN Roseau; MN Benson; ND Cavalier; ND Nelson; ND Pembina; ND Ramsey; ND Towner; ND Walsh.

151 Bismarck, ND:
SMSA Counties:
1010 Bismarck, ND 0.4
ND Burleigh; ND Morton.

Non-SMSA Counties 1.3
ND Adams; ND Billings; ND Bowman; ND Dunn; ND Emmons; ND Golden Valley; ND Grant; ND Hettinger; ND Kidder; ND Mercer; ND Oliver; ND Sheridan; ND Sioux; ND Slope; ND Stark; ND Wells.

152 Minot, ND:
Non-SMSA Counties 4.4
MT Daniels; MT Richland; MT Roosevelt; MT Sheridan; ND Bottineau; ND Burke; ND Divide; ND McHenry; ND McKenzie; ND McLean; ND Mountrail; ND Pierce; ND Renville; ND Rolette; ND Ward; ND Williams.

Montana:

153 Great Falls, MT:
SMSA Counties.
3040 Great Falls, MT 3.2
MT Cascade.
Non-SMSA Counties 4.1
MT Blaine; MT Broadwater; MT Chouteau; MT Fergus; MT Glacier; MT Hill; MT Jefferson; MT Judith Basin; MT Lewis and Clark; MT Liberty; MT Meagher; MT Petroleum; MT Phillips; MT Pondera; MT Teton; MT Toole; MT Valley; MT Wheatland.

154 Missoula, MT:
Non-SMSA Counties 2.7
MT Beaverhead; MT Deer Lodge; MT Flathead; MT Granite; MT Lincoln; MT Madison; MT Mineral; MT Missoula; MT Powell; MT Ravalli; MT Sanders; MT Silver Bow; MT Lake.

155 Billings, MT:
SMSA Counties:
0880 Billings, MT 3.3
MT Yellowstone.
Non-SMSA Counties 3.3
MT Big Horn; MT Carbon; MT Carter; MT Custer; MT Dawson; MT Fallon; MT Gallatin; MT Garfield; MT Golden Valley; MT McCone; MT Musselshell; MT Park; MT Powder River; MT Prairie; UT Rosebud; MT Stillwater, MT Sweet Grass; MT Treasure; MT Wilbaux; MT Yellowstone Nat'l Park; WY Big Horn; WY Hot Springs; WY Park; WY Sheridan; WY Washakie.

Wyoming:

156 Cheyenne-Casper, WY:
Non-SMSA Counties 7.5
CO Jackson; WY Albany; WY Campbell; WY Carbon; WY Converse; WY Fremont WY Johnson; WY Laramie; WY Natrona, WY Platte.

Colorado:

157 Denver, CO:
SMSA Counties:
2080 Denver-Boulder, CO 13.8
CO Adams; CO Arapahoe; C0 Boulder. CO Denver; CO Douglas; CO Gilpin; CO Jefferson.
2670 Fort Collins, CO 6.9
CO Larimer.
3060 Greeley, CO 13.1
CO Weld.

Non-SMSA Counties 12.8
CO Cheyenne; CO Clear Creek; CO Elbert CO Grand; CO Kit Carson;
CO Logan; CO Morgan; CO Park; CO Phillips; :CO Sedgwick;
CO Summit; CO Washington; CO Yuma.

158 Colorado Springs-Pueblo, CO:
SMSA Counties:
1720 Colorado Springs, CO 10.9
CO EL Paso; CO Teller.
6560 Pueblo, CO 27.5
CO Pueblo.
Non-SMSA Counties 19.0
CO Alamosa; CO Baca; CO Bent; CO Chaffee; CO Conejos; CO Costilla;
CO Crowley; CO Custer; CO Fremont; CO Huerfano; CO Kiowa; CO Lake;
CO Las Animas; CO Lincoln; CO Mineral; CO Otero; CO Prowers; CO Rio Grande;
CO Saguache.

159 Grand Junction. CO:
Non-SMSA Counties 10.2
CO Archuleta; CO Delta; CO Dolores; CO Eagle; CO Garfield; CO Gunnison;
CO Hinsdale; CO La Plata, CO Mesa; CO Moffat; CO Montezuma; CO Montrose;
CO Ouray; CO Pitkin; CO Rio Blanco; CO Routt; CO San Juan; CO San Miguel;
UT Grand; UT San Juan.

New Mexico:

160 Albuquerque, NM:
SMSA Counties.
0200 Albuquerque, NM 38.3
NM Bernalillo; NM Sandoval.
Non-SMSA Counties 45.9
NM Citron. NM Colfax; NM De Baca; NM Guadalupe; NM San Juan; NM San Miguel;
NM Santa Fe; NM Socorro; NM Taos; NM Torrance; NM Valencia.

Arizona:

161 Tucson, AZ:
SMSA Counties:
8520 Tucson, AZ 24.1
AZ Pima.
Non-SMSA Counties 27.0
AZ Cochise; AZ Graham; AZ Greenlee; AZ Santa Cruz.

162 Phoenix, AZ:
SMSA Counties:
6200 Phoenix, AZ 15.8
AZ Maricopa.
Non-SMSA Counties 19.6
AZ Apache; AZ Coconino; AZ Gila; AZ Mohave; AZ Navajo; AZ Pinal;
AZ Yavapai; AZ Yuma.

Nevada:

163 Las Vegas, NV:
SMSA Counties:
4120 Las Vegas, NV 13.9
NV Clark.

Non-SMSA Counties 12.6
NV Esmeralda; NV Lincoln; NV Nye;UT Beaver; UT Garfield; UT Iron;
UT Kane; UT Washington.
164 Reno, NV:
SMSA Counties:
6720 Reno, NV 8.2
NV Washoe.
Non-SMSA Counties 9.2
NV Churchill; NV Douglas; NV Elko;NV Eureka; NV Humboldt; NV Lander;
NV Lyon; NV Mineral; NV Pershing; NV Storey; NV White Pine; NV Carson City

Utah:

165 Salt Lake City, Ogden, UT:
SMSA Counties
6520 Provo-Orem, UT 2.4
UT Utah.
7160 Salt Lake City-Ogden, UT 6.0
UT Davis; UT Salt Lake; UT Toole; UT Weber.
Non-SMSA Counties 5.1
ID Bear Lake; ID Franklin; ID Oneida; UT Box Elder; UT Cache; UT Carbon;
UT Daggett; UT Duchesne; UT Emery; UT Juab; UT Millard; UT Morgan; UT Piute;
UT Rich; UT Sanpete; UT Sevier; UT Summit; UT Uintah -UT Wasatch; UT Wayne;
WY Lincoln; WY Sublette; WY Sweetwater; WY Uinta.

Idaho:

166 Pocatello-Idaho Falls, ID:
Non-SMSA Counties 4.0
ID Bannock; ID Bingham; ID Baline; ID Bonneville; ID Butte; ID Camas; ID Caribou;
ID Cassia; ID Clark; ID Custer; ID Fremont; ID Gooding; ID Jefferson; ID Jerome;
ID Lemini; ID Lincoln; ID Madison; ID Minidoka; ID Power; ID Teton; ID Twin Falls;
WY Teton.
167 Boise City, ID:
SMSA Counties:
1080 Boise City. ID 2.3
ID Ada.
Non-SMSA Counties 4.4
ID Adams; ID Boise; ID Canyon; ID Elmore; ID Gem; ID Owyhee; ID Payette;
ID Valley; ID Washington; OR Harney; OR Malheur.

Washington:

168 Spokane, WA:
SMSA Counties:
7840 Spokane, WA 2.8
WA Spokane.
Non-SMSA Counties 3.0
ID Benewah; ID Bonner; ID Boundary; ID Clearwater; ID Idaho; ID Kootena; ID Latah;
ID Lewis; ID Nez Perce; ID Shoshone; WA Adams; WA Asotin; WA Columbia; WA
Ferry; WA Garfield; WA Lincoln; WA Pend Orelle; WA Stevens; WA Whitman.
169 Richland, WA:
SMSA Counties:
6740 Richland-Kennewick, WA 5.4
WA Benton; WA FranklIn.
Non-SMSA Counties 3.8

OR Baker; OR Gilliam; OR Grant; OR Morrow; OR Umatilla; OR Union;
OR Wallowa; OR Wheeler; WA Walla Walla.

170 Yakima, WA:
SMSA Counties:
9260 Yakima, WA ____ 9.7
WA Yakima.
Non-SMSA Counties ____ 7.2
WA Chelan; WA Douglas; WA Grant; WA Kittitas; WA Okanogan.

171 Seattle, WA:
SMSA Counties:
7600 Seattle-Everett, WA ____ 7.2
WA King; WA Snohomish.
8200 Tacoma, WA ____ 6.2
WA Pierce.
Non-SMSA Counties ____ 6.2
WA Clallarn; WA Grays Harbor; WA Island; WA Jefferson; WA Kitsap; WA Lewis;
WA Mason; WA Pacific; WA San Juan; WA Skaqil; WA Thurston; WA Whatcom.

Oregon:

172 Portland, OR:
SMSA Counties:
6440 Portland, OR-WA ____ 4.5
OR Clackamas; OR Muitnomah; OR Washinton; WA Clark.
7080 Salem OR ____ 2.9
OR Marion; OR Polk.
Non-SMSA Counties: . . .
OR Benton; OR Clatsop; OR Columbia; OR Crook; OR Deschutes; OR Hood River;
OR Jefferson; OR Lincoln; OR Linn; OR Sherman; OR Tillammok; OR Wasco;
OR Yamhill; WA Cowlitz; WA Klickitat; WA Skamania; WA Wahkiakum.

173 Eugene, OR:
SMSA Counties:
2400 Eugene-Springfield, OR ____ 2.4
OR Lane.
Non-SMSA Counties ____ 2.4
OR Coos; OR Curry; OR Douglas; OR Jackson; OR Josephine; OR Klamath;
OR Lake

California:

174 Redding, CA:
Non-SMSA Counties ____ 6.8
CA Lassen; CA Modoc; CA Plumas; CA; Shasta; CA Siskiyou; CA Tehama.

175 Eureka, CA:
Non-SMSA Counties ____ 6.6
CA Del Norte; CA Humboldt; CA Trinity.

176 San Francisco-Oakland-San Jose, CA:
SMSA Counties:
7120 Salinas-Seaside-Monterey, CA ____ 28.9
CA Monterey.
7360 San Francisco-Oakland, CA ____ 25.8
CA Alameda; CA Contra Costa; CA Marin; San Francisco; CA San Mateo.
7400 San Jose, CA ____ 19.6
CA Santa Clara.
7485 Santa Cruz, CA ____ 14.9
CA Santa Cruz.
7500 Santa Rosa, CA ____ 9.1
CA Sonoma.-

8720 Vallejo-Fairfield-Napa, CA 17.1
CA Napa; CA Solano.
Non-SMSA Counties 23.2
CA Lake; CA Mendocino; CA San Benito.
177 Sacramento, CA:
SMSA Counties:
6920 Sacramento, CA 16.1
CA Placer; CA Sacramento; CA Yolo.
Non-SMSA Counties 14.3
CA Butte; CA Colusa; CA El Dorado; CA Glenn; CA Nevada; CA Sierra; CA Sutter; CA Yuba.
178 Stockton-Modesto, CA:
SMSA Counties:-
5170 Modesto, CA 12.3
CA Stanislaus
8120 Stockton, CA 24.3
CA San Joaquin.
Non-SMSA Counties 19.8
CA Alpine; CA Amador; CA Calaveras; CA Mariposa; CA Merced, CA Tuolumne.
179 Fresno-Bakersfield, CA:
SMSA Counties:
0680 Bakersfield, CA 19.1
CA Kent
2840 Fresno, CA 26.1
CA Fresno
Non-SMSA Counties 23.6
CA Kings; CA Madera CA Tulare.
180 Los Angeles, CA:
SMSA Counties.
0360 Anaheim-Santa Ana-Garden Grove, CA 11.9
CA Orange.
4480 Los Angeles-Long Beach, CA 28.3
CA Los Angeles
6000 Oxnard-Simi Valley-Ventura, CA 21.5
CA Ventura
6780 Riverside-San Bernardino-Ontario, CA 19.0
CA Riverside; CA San Bernadino.
7480 Santa Barbara-Santa Maria-Lompoc, CA 19.7
CA Santa Barbara.
Non-SMSA Counties 24.6
CA Inyo; CA Mono; CA San Luis - Obispo.
181 San Diego, CA:
SMSA Counties
7320 San Diego, CA 16.9
CA San Diego.
Non-SMSA Counties 16.2
CA Imperial

Alaska:

182 Anchorage, AK:
SMSA Counties:
0380 Anchorage, AK 8.7
AK Anchorage Division.
Non-SMSA Counties 15.1
AK Aleutian Islands Division; AK Angoon Division; AK Barrow-North Slope Division; AK Bethel Division; AK Bristol Bay Borough; AK Bristol Bay Division; AK Cordova McCarthy Division; AK Fairbanks Division; AK Haines Division; AK Juneau Division;

AK Kenai-Cook Inlet Division; AK Ketchikan Division; AK Kobuk Division; AK Kodiak Division; AK Kwskokwim Division; AK Matansuska-Susitna Division; AK Nome Division; AK Outer Ketchikan Division; AK Prince of Wales Division; AK Seward Division; AK Sitka Division; AK Skagaway-Yakutat Division; AK Southeast Fairbanks Division; AK Upper Yukon Division; AK Valdez-Citina-Whittier Division; AK Wade Hampton Division; AK Wrangell-Petersburg Division; AK Yukon-Koyukuk Division.

Hawaii:

183 Honolulu, HI:
SMSA Counties:
3320 Honolulu. Hl 69.1
HI Honolulu.
Non-SMSA Counties 70.4
HI Hawaii; HI Kauai; HI Maui; HI Kalowao.

Back

NOTICE OF REQUIREMENTS FOR AFFIRMATIVE ACTION TO ENSURE EQUAL EMPLOYMENT OPPORTUNITY (EXECUTIVE ORDER 11246 AND 41 CFR PART 60-4)

The following Notice shall be included in, and shall be a part of all solicitations for offers and bids on all Federal and federally assisted construction contracts or subcontracts in excess of $10,000.

The Offeror's or Bidder's attention is called to the "Equal Opportunity Clause" and the "Standard Federal Equal Employment Opportunity Construction Contract Specifications" set forth herein.

The goals and timetables for minority and female participation, expressed in percentage terms for the Contractor's aggregate workforce in each trade on all construction work in the covered area, are as follows:

Timetables	Goals for minority participation for each trade	Goals for female participation for each trade
What % to use?	%	6.9%

These goals are applicable to all the Contractor's construction work (whether or not it is Federal or federally assisted) performed in the covered area. If the contractor performs construction work in a geographical area located outside of the covered area, it shall apply the goals established for such geographical area where the work is actually performed. With regard to this second area, the contractor also is subject to the goals for both its federally involved and non federally involved construction.
The Contractor's compliance with the Executive Order and the regulations in 41 CFR Part 60-4 shall be based on its implementation of the Equal Opportunity Clause, specific affirmative action obligations required by the specifications set forth in 41 CFR 60-4.3(a), and its efforts to meet the goals. The hours of minority and female employment and training must be substantially uniform throughout the length of the contract, and in each trade and the contractor shall make a good faith effort to employ minorities and women evenly on each of its projects. The transfer of minority or female employees or trainees from Contractor to Contractor or from project to project for the sole purpose of meeting the Contractor's goals shall be a violation of the contract, the Executive Order, and the regulations in 41 CFR Part 60-4. Compliance with the goals will be measured against the total work hours performed.

The Contractor shall provide written notification to the Director of the Office of Federal Contract Compliance Programs within 10 working days of award of any construction subcontract in excess of $10,000 at any tier for construction work under the contract resulting from this solicitation. The notification shall list the name, address and telephone number of the subcontractor; employer identification number of the subcontractor; estimated dollar amount of the subcontract; estimated starting and completion dates of the subcontract; and the geographical area in which the subcontract is to be performed.
As used in this Notice, and in the contract resulting from this solicitation, the "covered area" is:

State of _____

County of _____

City of _____

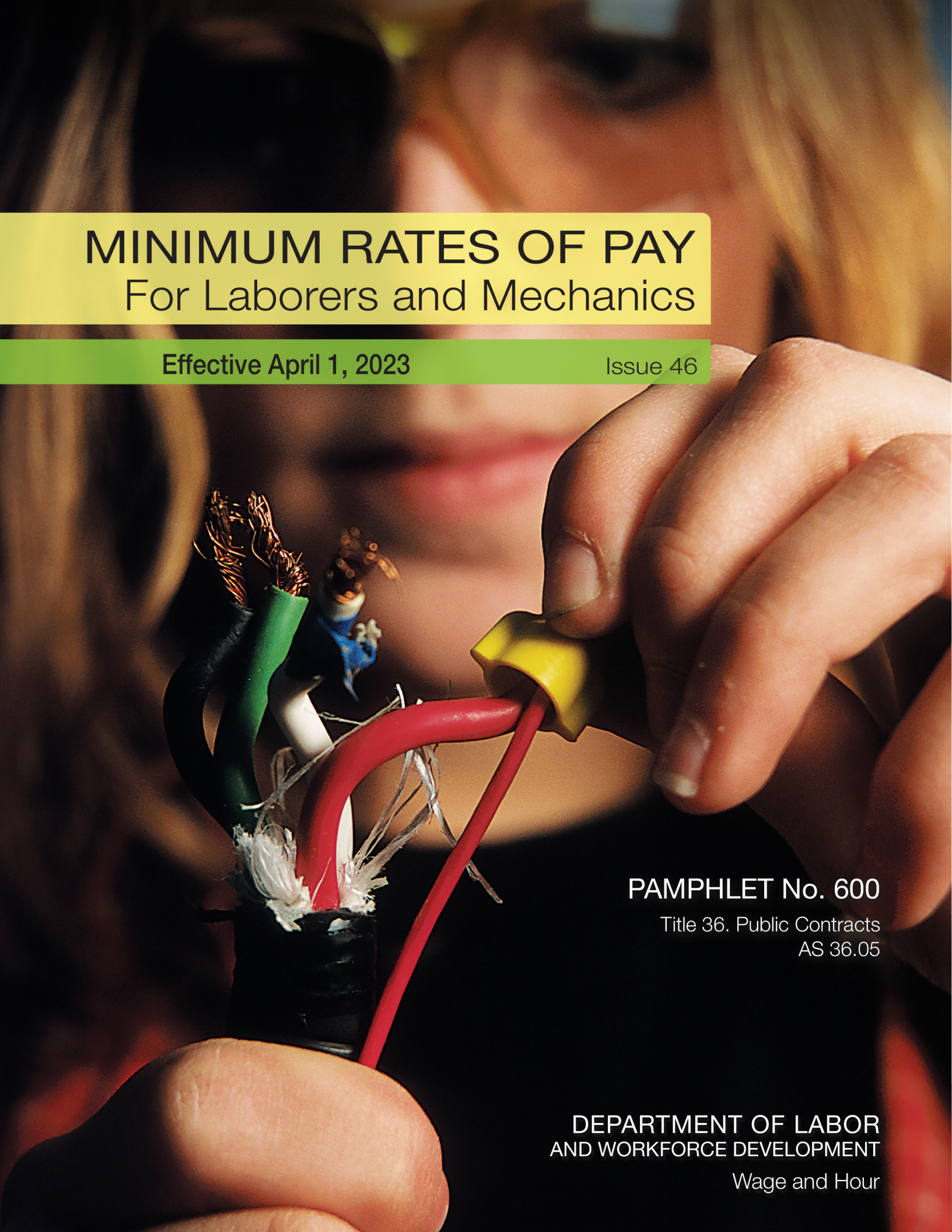

MINIMUM RATES OF PAY
For Laborers and Mechanics

Effective April 1, 2023 Issue 46

PAMPHLET No. 600

Title 36. Public Contracts
AS 36.05

DEPARTMENT OF LABOR
AND WORKFORCE DEVELOPMENT
Wage and Hour

- This page intentionally left blank -

THE STATE of ALASKA
GOVERNOR MIKE DUNLEAVY

Department of Labor and Workforce Development

Office of the Commissioner

Post Office Box 111149
Juneau, Alaska 99811
Main: 907.465.2700
fax: 907.465-2784

April 1, 2023

TO ALL CONTRACTING AGENCIES:

At the Alaska Department of Labor and Workforce Development our goal is putting Alaskans to work. This pamphlet is designed to help contractors awarded public construction contracts understand the most significant laws of the State of Alaska pertaining to prevailing wage.

This pamphlet identifies current prevailing wage rates for public construction contracts (any construction projects awarded for the State of Alaska or its political subdivisions, such as local governments and certain non-profit organizations). Because these rates may change in a subsequent determination, please be sure you are using the appropriate rates. The rates published in this edition become effective April 1, 2023.

The prevailing wage rates contained in this pamphlet are applicable to public construction projects with a final bid date of April 11, 2023, or later. As the law now provides, these rates will remain stable during the life of a contract or for 24 calendar months, whichever is shorter. **The 24-month period begins on the date the prime contract is awarded.** Upon expiration of the initial 24-month period, the latest wage rates issued by the department shall become effective for a subsequent 24-month period or until the original contract is completed, whichever occurs first. This process shall be repeated until the original contract is completed.

The term "original contract" means the signed contract that resulted from the original bid and any amendments, including changes of work scope, additions, extensions, change orders, and other instruments agreed to by the parties that have not been subject to subsequent open bid procedures.

If a higher federal rate is required due to partial federal funding or other federal participation, the higher rate must be paid.

For additional copies of this pamphlet go to: http://labor.state.ak.us/lss/pamp600.htm

For questions regarding prevailing wage or employment preference requirements, please contact the nearest Wage and Hour office. These offices are listed on Page x.

Sincerely,

Catherine Muñoz
Acting Commissioner

- This page intentionally left blank -

Table of Contents

Excerpts from Alaska Law

Sec. 36.05.005. Applicability..... ….iv

Sec. 36.05.010. Wage rates on public construction. iv

Sec. 36.05.040. Filing schedule of employees, wages paid and other information iv

Sec. 36.05.045. Notice of work and completion; withholding of payment iv

Sec. 36.05.060. Penalty for violation of this chapter v

Sec. 36.05.070. Wage rates in specifications and contracts for public works v

Sec. 36.05.080. Failure to pay agreed wages v

Sec. 36.05.090. Payment of wages from withheld payments and listing contractors who violate contracts v

Sec. 36.05.900. Definition.. vi

Excerpts from Alaska Administrative Code

8 AAC 30.051. Purpose vi

8 AAC 30.052. Board and lodging; remote sites vi

8 AAC 30.054. Per diem instead of board and lodging vi

8 AAC 30.056. Alternative arrangement..... vii

8 AAC 30.900. General definitions (selected excerpts) vii

Additional Information

Per Diem vii

Laborer Classification Clarification..... viii

Apprentice Rates..... viii

Fringe Benefit Plans..... viii

Special Prevailing Wage Rate Determination..... ix

Alaska Employment Preference Information..... ix

Labor Standards and Safety Notice Requests x

Debarment List x

Wage Rates ..... Pages 1-26

Shipyard Rate Addendum.....Pages 27

Note to Readers: The statutes and administrative regulations listed in this publication were taken from the official codes, as of the effective date of the publication. However, there may be errors or omissions that have not been identified and changes that occurred after the publication was printed. This publication is intended as an informational guide only and is not intended to serve as a precise statement of the statutes and regulations of the State of Alaska. To be certain of current laws and regulations, please refer to the official codes.

EXCERPTS FROM ALASKA LAW

Sec. 36.05.005. Applicability.
This chapter applies only to a public construction contract that exceeds $25,000.

Sec. 36.05.010. Wage rates on public construction.
A contractor or subcontractor who performs work on a public construction contract in the state shall pay not less than the current prevailing rate of wages for work of a similar nature in the region in which the work is done. The current prevailing rate of wages is that contained in the latest determination of prevailing rate of wages issued by the Department of Labor and Workforce Development at least 10 days before the final date for submission of bids for the contract. The rate shall remain in effect for the life of the contract or for 24 calendar months, whichever is shorter. At the end of the initial 24-month period, if new wage determinations have been issued by the department, the latest wage determination shall become effective for the next 24-month period or until the contract is completed, whichever occurs first. This process shall be repeated until the contract is completed.

Sec. 36.05.040. Filing schedule of employees, wages paid, and other information.
All contractors or subcontractors who perform work on a public construction contract for the state or for a political subdivision of the state shall, before the Friday of every second week, file with the Department of Labor and Workforce Development a sworn affidavit for the previous reporting period, setting out in detail the number of persons employed, wages paid, job classification of each employee, hours worked each day and week, and other information on a form provided by the Department of Labor and Workforce Development.

Sec. 36.05.045. Notice of work and completion; withholding of payment.

(a) Before commencing work on a public construction contract, the person entering into the contract with a contracting agency shall designate a primary contractor for purposes of this section. Before work commences, the primary contractor shall file a notice of work with the Department of Labor and Workforce Development. The notice of work must list work to be performed under the public construction contract by each contractor who will perform any portion of work on the contract and the contract price being paid to each contractor. The primary contractor shall pay all filing fees for each contractor performing work on the contract, including a filing fee based on the contract price being paid for work performed by the primary contractor's employees. The filing fee payable shall be the sum of all fees calculated for each contractor. The filing fee shall be one percent of each contractor's contract price. The total filing fee payable by the primary contractor under this subsection may not exceed $5,000. In this subsection, "contractor" means an employer who is using employees to perform work on the public construction contract under the contract or a subcontract.

(b) Upon completion of all work on the public construction contract, the primary contractor shall file with the Department of Labor and Workforce Development a notice of completion together with payment of any additional filing fees owed due to increased contract amounts. Within 30 days after the department's receipt of the primary contractor's notice of completion, the department shall inform the contracting agency of the amount, if any, to be withheld from the final payment.

(c) A contracting agency

(1) may release final payment of a public construction contract to the extent that the agency has received verification from the Department of Labor and Workforce Development that

(A) the primary contractor has complied with (a) and (b) of this section;

(B) the Department of Labor and Workforce Development is not conducting an investigation under this title; and

(C) the Department of Labor and Workforce Development has not issued a notice of a violation of this chapter to the primary contractor or any other contractors working on the public construction contract; and

(2) shall withhold from the final payment an amount sufficient to pay the department's estimate of what may be needed to compensate the employees of any contractors under investigation on this construction contract, and any unpaid filing fees.

(d) The notice and filing fee required under (a) of this section may be filed after work has begun if
   (1) The public construction contract is for work undertaken in immediate response to an emergency; and
   (2) The notice and fees are filed not later than 14 days after the work has begun.

(e) A false statement made on a notice required by this section is punishable under AS 11.56.210.

Sec. 36.05.060. Penalty for violation of this chapter.

A contractor who violates this chapter is guilty of a misdemeanor and upon conviction is punishable by a fine of not less than $100 nor more than $1,000, or by imprisonment for not less than 10 days nor more than 90 days, or by both. Each day a violation exists constitutes a separate offense.

Sec. 36.05.070. Wage rates in specifications and contracts for public works.

(a) The advertised specifications for a public construction contract that requires or involves the employment of mechanics, laborers, or field surveyors must contain a provision stating the minimum wages to be paid various classes of laborers, mechanics, or field surveyors and that the rate of wages shall be adjusted to the wage rate under AS 36.05.010.

(b) Repealed by §17 ch 142 SLA 1972.

(c) A public construction contract under (a) of this section must contain provisions that
   (1) the contractor or subcontractors of the contractor shall pay all employees unconditionally and not less than once a week;
   (2) wages may not be less than those stated in the advertised specifications, regardless of the contractual relationship between the contractor or subcontractors and laborers, mechanics, or field surveyors;
   (3) the scale of wages to be paid shall be posted by the contractor in a prominent and easily accessible place at the site of the work;
   (4) the state or a political subdivision shall withhold so much of the accrued payments as is necessary to pay to laborers, mechanics, or field surveyors employed by the contractor or subcontractors the difference between
      (A) the rates of wages required by the contract to be paid laborers, mechanics, or field surveyors on the work; and
      (B) the rates of wages in fact received by laborers, mechanics, or field surveyors.

Sec. 36.05.080. Failure to pay agreed wages.

Every contract within the scope of AS 36.05.070 shall contain a provision that if it is found that a laborer, mechanic, or field surveyor employed by the contractor or subcontractor has been or is being paid a rate of wages less than the rate of wages required by the contract to be paid, the state or its political subdivision may, by written notice to the contractor, terminate the contractor's right to proceed with the work or the part of the work for which there is a failure to pay the required wages and to prosecute the work to completion by contract or otherwise, and the contractor and the contractor's sureties are liable to the state or its political subdivision for excess costs for completing the work.

Sec. 36.05.090. Payment of wages from withheld payments and listing contractors who violate contracts.

(a) The state disbursing officer in the case of a state public construction contract and the local fiscal officer in the case of a political subdivision public construction contract shall pay directly to laborers, mechanics, or field surveyors from accrued payments withheld under the terms of the contract the wages due laborers, mechanics, or field surveyors under AS 36.05.070.

(b) The state disbursing officer or the local fiscal officer shall distribute to all departments of the state government and to all political subdivisions of the state a list giving the names of persons who have disregarded their obligations to employees. A person appearing on this list and a firm, corporation, partnership, or association in which the person has an interest may not work as a contractor or

subcontractor on a public construction contract for the state or a political subdivision of the state until three years after the date of publication of the list. If the accrued payments withheld under the contract are insufficient to reimburse all the laborers, mechanics, or field surveyors with respect to whom there has been a failure to pay the wages required under AS 36.05.070, the laborers, mechanics, or field surveyors have the right of action or intervention or both against the contractor and the contractor's sureties conferred by law upon persons furnishing labor or materials, and in the proceedings it is not a defense that the laborers, mechanics, or field surveyors accepted or agreed to accept less than the required rate of wages or voluntarily made refunds.

Sec. 36.05.900. Definition.
In this chapter, "contracting agency" means the state or a political subdivision of the state that has entered into a public construction contract with a contractor.

EXCERPTS FROM ALASKA ADMINISTRATIVE CODE

*****Notice:** Regulations relating to board and lodging and per diem went into effect on November 25, 2018. The new regulations are excerpted here*******

8 AAC 30.051. Purpose. The purpose of 8 AAC 30.052 – 8 AAC 30.056 is to ensure that wages paid to laborers, mechanics, and field surveyors do not fall below the prevailing rate of pay.

8 AAC 30.052. Board and lodging; remote sites. (a) A contractor on a public construction project located 65 or more road miles from the international airport closest to the project area in either Fairbanks, Juneau, or Anchorage, or that is inaccessible by road in a two-wheel drive vehicle, shall provide adequate board and lodging to each laborer, mechanic, or field surveyor while the person is employed on the project. If commercial lodging facilities are not available, the contractor shall provide temporary lodging facilities. Lodging facilities must comply with all applicable state and federal laws. For a highway project, the location of the project is measured from the midpoint of the project.

(b) A contractor is not required to provide board and lodging:

(1) to a laborer, mechanic, or field surveyor who is a domiciled resident of the project area; or

(2) on a laborer, mechanic, or field surveyor's scheduled days off, when the person can reasonably travel between the project and the person's permanent residence; for the purposes of this paragraph, "scheduled day off" means a day in which a person does not perform work on-site, is not required to remain at or near the job location for the benefit of the contractor, and is informed of the day off at least seven days before the day off.

(c) Upon a contractor's written request, the commissioner may waive the requirements of (a) of this section where:

(1) the project is inaccessible by road in a two-wheel drive vehicle, but the laborer, mechanic, or field surveyor can reasonably travel between the project and the person's permanent residence within one hour; or

(2) a laborer, mechanic, or field surveyor is not a domiciled resident of the project area, but has established permanent residence, with the intent to remain indefinitely, within 65 road miles of the project, or for a highway project, the mid-point of the project.

8 AAC 30.054. Per diem instead of board and lodging. (a) A contractor may pay a laborer, mechanic, or field surveyor per diem instead of providing board and lodging, when the following conditions are met:

(1) the department determines that per diem instead of board and lodging is an established practice for the work classification; the department shall publish and periodically revise its determinations in the pamphlet *Laborers and Mechanics Minimum Rates of Pay*;

(2) the contractor pays each laborer, mechanic, or field surveyor the appropriate per diem rate as published and periodically revised in the pamphlet *Laborers and Mechanics Minimum Rates of Pay*; and

(3) the contractor pays the per diem to each laborer, mechanic, or field surveyor on the same day that wages are paid.

(b) A contractor may not pay per diem instead of board and lodging on a highway project located

(1) west of Livengood on the Elliot Highway, AK-2;

(2) on the Dalton Highway, AK-11;

(3) north of milepost 20 on the Taylor Highway, AK-5;

(4) east of Chicken on the Top of the World Highway; or

(5) south of Tetlin Junction to the Alaska-Canada border on the Alaska Highway, AK-2.

8 AAC 30.056. Alternative arrangement. Upon a contractor's written request, the commissioner may approve an alternative board and lodging or per diem arrangement, provided

(1) the arrangement does not reduce the laborer, mechanic, or field surveyor's wages below the prevailing wage rate; and

(2) the laborer, mechanic, or field surveyor voluntarily enters into and signs the written arrangement; a labor organization representing laborers, mechanics, or field surveyors may enter into the written agreement on their behalf.

8 AAC 30.900. General definitions (selected excerpts only):

In this chapter and in AS 36

(22) "domiciled resident" means a person living within 65 road miles of a public construction project, or in the case of a highway project, the mid-point of the project, for at least 12 consecutive months prior to the award of the public construction project;

(23) "employed on the project" means the time period from the date the laborer, mechanic, or field surveyor first reports on-site to the project through the final date the person reports on-site to the project.

ADDITIONAL INFORMATION

PER DIEM

Notice: New regulations relating to board and lodging and per diem went into effect on November 25, 2018. The regulations provide a comprehensive set of requirements for the provision of board and lodging or per diem for workers on remote projects. Please refer to Alaska Administrative Code 8 AAC Chapter 30 and read the chapter carefully.

The Alaska Department of Labor and Workforce Development has determined that per diem is an established work practice for certain work classifications. These classifications are indicated throughout the Pamphlet by an asterisk (*) under the classification title. If all of the conditions of 8 AAC 30.054 are met, an employer may pay workers in these classifications per diem instead of providing board and lodging on a remote project.

Per Diem Rate: As of May 1st, 2019, the minimum per diem rate is $100.00 per day, or part thereof, the worker is employed on the project. In the event that a contractor provides lodging facilities, but no meals, the department will accept a payment of $48 per day for meals to meet the per diem requirements.

LABORER CLASSIFICATION CLARIFICATION

The laborer rates categorized in class code S1201-S1206 apply in one area of Alaska; the area that is south of N63 latitude and west of W138 Longitude. The laborer rates categorized in class code N1201-N1206 apply in two areas of Alaska; the Alaska areas north of N63 latitude and east of W138 longitude. The following graphic representations should assist with clarifying the applicable wage rate categories:

S1201-
S1206

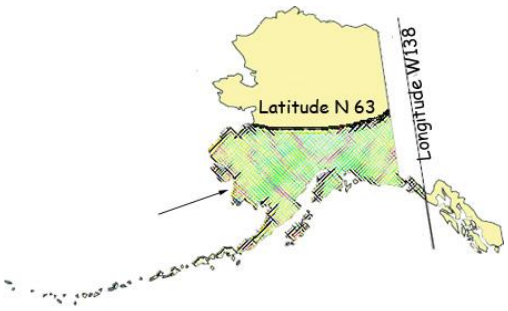

N1201-
N1206

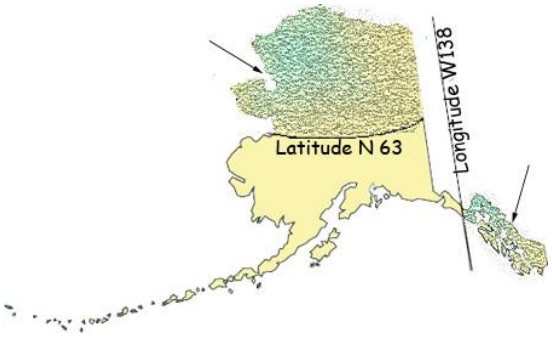

APPRENTICE RATES

Apprentice rates at less than the minimum prevailing rates may be paid to apprentices according to an apprentice program which has been registered and approved by the Commissioner of the Alaska Department of Labor and Workforce Development in writing or according to a bona fide apprenticeship program registered with the U.S. Department of Labor, Office of Apprenticeship Training. **Any employee listed on a payroll at an apprentice wage rate who is not registered as above shall be paid the journeyman prevailing minimum wage in that work classification.** Wage rates are based on prevailing crew makeup practices in Alaska and apply to work performed regardless of either the quality of the work performed by the employee or the titles or classifications which may be assigned to individual employees.

FRINGE BENEFIT PLANS

Contractors/subcontractors may compensate fringe benefits to their employees in any one of three methods. The fringe benefits may be paid into a union trust fund, into an approved benefit plan, or paid directly on the paycheck as gross wages.

Where fringe benefits are paid into approved plans, funds, or programs including union trust funds, the payments must be contributed at least monthly. If contractors submit their own payroll forms and are paying fringe benefits into approved plans, funds, or programs, the employer's certification must include, in addition to those requirements of 8 AAC 30.020(c), a statement that fringe benefit payments have been or will be paid at least monthly. Contractors who pay fringe benefits to a plan must ensure the plan is one approved by the Internal Revenue Service and that the plan meets the requirements of 8 AAC 30.025 (eff. 3/2/08) in order for payments to be credited toward the prevailing wage obligation.

SPECIAL PREVAILING WAGE RATE DETERMINATION

Special prevailing wage rate determinations may be requested for special projects or a special worker classification if the work to be performed does not conform to traditional public construction for which a prevailing wage rate has been established under 8 AAC 30.050(a) of this section. Requests for special wage rate determinations must be in writing and filed with the Commissioner at least 30 days before the award of the contract. An applicant for a special wage rate determination shall have the responsibility to support the necessity for the special rate. An application for a special wage rate determination filed under this section must contain:

(1) a specification of the contract or project on which the special rates will apply and a description of the work to be performed;
(2) a brief narrative explaining why special wage rates are necessary;
(3) the job class or classes involved;
(4) the special wage rates the applicant is requesting, including survey or other relevant wage data to support the requested rates;
(5) the approximate number of employees who would be affected; and
(6) any other information which might be helpful in determining if special wage rates are appropriate.

Requests made pursuant to the above should be addressed to:

Director
Alaska Department of Labor and Workforce Development
Labor Standards and Safety Division
Wage and Hour
P.O. Box 111149
Juneau, AK 99811-1149
-or-
Email: statewide.wagehour@alaska.gov

EMPLOYMENT PREFERENCE INFORMATION

In October 2019, the Alaska Attorney General issued a formal opinion stating that the Alaska Statutes 36.10.150 of the State's 90% Employment Preference law, also known as the Alaska Resident Hire law, violates both the U.S. and Alaska Constitutions. As a result, the state has stopped all enforcement activity.
A copy of the Attorney General opinion is found here:

http://law.alaska.gov/pdf/opinions/opinions_2019/19-005_AK-hire.pdf

Alaska Department of Labor and Workforce Development
Labor Standards and Safety Division
Wage and Hour
Web site: http://labor.state.ak.us/lss/pamp600.htm

Anchorage	Juneau	Fairbanks
1251 Muldoon Road, Suite 113 Anchorage, Alaska 99504-2098 Phone: (907) 269-4900 Email: statewide.wagehour@alaska.gov	PO Box 111149 Juneau, Alaska 99811 Phone: (907) 465-4842 Email: statewide.wagehour@alaska.gov	Regional State Office Building 675 7th Ave., Station J-1 Fairbanks, Alaska 99701-4593 Phone: (907) 451-2886 Email: statewide.wagehour@alaska.gov

LABOR STANDARDS AND SAFETY NOTICE REQUESTS

If you would like to receive Wage and Hour or Mechanical Inspection **regulation notices** or **publications information**, they are available via electronic mail, by signing up in the GovDelivery System, https://public.govdelivery.com/accounts/AKDOL/subscriber/new and selecting topics *LSS – Wage and Hour – Forms and Publications*, *LSS – Mechanical Inspection Regulations*, or *LSS – Wage and Hour Regulations*.

Publications are also available online at http://labor.alaska.gov/lss/home.htm

DEBARMENT LIST

AS 36.05.090(b) states that "the state disbursing officer or the local fiscal officer shall distribute to all departments of the state government and to all political subdivisions of the state a list giving the names of persons who have disregarded their obligations to employees."

A person appearing on the following debarment list and a firm, corporation, partnership, or association in which the person has an interest may not work as a contractor or subcontractor on a public construction contract for the state or a political subdivision of the state for three years from the date of debarment.

Company Name	Debarment Expires

No companies are currently debarred.

Laborers' & Mechanics' Minimum Rates of Pay

Class Code	Classification of Laborers & Mechanics	BHR	H&W	PEN	TRN	Other Benefits		THR
Boilermakers	*See per diem note on last page							
						VAC	**SAF**	
A0101	Boilermaker (journeyman)	48.15	8.57	18.40	2.15	4.25	0.34	81.86
Bricklayers & Blocklayers	*See per diem note on last page							
						L&M		
A0201	Blocklayer	42.01	9.00	10.20	0.62	0.20		62.03
	Bricklayer Marble or Stone Mason Refractory Worker (Firebrick, Plastic, Castable, and Gunite Refractory Applications) Terrazzo Worker Tile Setter							
						L&M		
A0202	Tuck Pointer Caulker	42.01	9.00	10.20	0.62	0.20		62.03
	Cleaner (PCC)							
						L&M		
A0203	Marble & Tile Finisher	35.84	9.00	10.20	0.62	0.20		55.86
	Terrazzo Finisher							
						L&M		
A0204	Torginal Applicator	35.84	9.00	10.20	0.62	0.20		55.86
Carpenters, Region I (North of 63 latitude)	*See per diem note on last page							
						L&M	**SAF**	
N0301	Carpenter (journeyman)	43.34	10.35	15.82	1.75	0.20	0.20	71.66
	Lather/Drywall/Acoustical							
Carpenters, Region II (South of N63 latitude)	*See per diem note on last page							
						L&M	**SAF**	
S0301	Carpenter (journeyman)	43.34	10.35	16.36	1.75	0.20	0.20	72.20
	Lather/Drywall/Acoustical							
Cement Masons	*See per diem note on last page							

Wage benefits key: BHR=basic hourly rate; H&W=health and welfare; IAF=industry advancement fund; LEG=legal fund; L&M=labor/management fund; PEN=pension fund; SAF=safety; SUI=supplemental unemployment insurance; S&L=SUI & LEG combined; TRN=training; THR=total hourly rate; VAC=vacation

Class Code	Classification of Laborers & Mechanics	BHR	H&W	PEN	TRN	Other Benefits	THR
Cement Masons							
	*See per diem note on last page						
						L&M	
A0401	Group I, including:	44.43	8.80	11.80	1.53	0.10	66.66
	Application of Sealing Compound						
	Application of Underlayment						
	Building, General						
	Cement Finisher						
	Cement Mason (journeyman)						
	Concrete						
	Concrete Paving						
	Concrete Polishing						
	Concrete Repair						
	Curb & Gutter, Sidewalk						
	Curing of All Concrete						
	General Concrete Pour Tender						
	Grouting & Caulking of Tilt-Up Panels						
	Grouting of All Plates						
	Patching Concrete						
	Screed Pin Setter						
	Screeder or Rodder						
	Spackling/Skim Coating						
						L&M	
A0402	Group II, including:	44.43	8.80	11.80	1.53	0.10	66.66
	Form Setter						
						L&M	
A0403	Group III, including:	44.43	8.80	11.80	1.53	0.10	66.66
	Concrete Saw Cutter Operator (All Control Joints and Self-powered)						
	Curb & Gutter Machine						
	Floor Grinder						
	Pneumatic Power Tools						
	Power Chipping & Bushing						
	Sand Blasting Architectural Finish						
	Screed & Rodding Machine Operator						
	Troweling Machine Operator (all concrete surfaces)						
						L&M	
A0404	Group IV, including:	44.43	8.80	11.80	1.53	0.10	66.66
	Acoustical or Imitation Acoustical Finish						
	Application of All Composition Mastic						
	Application of All Epoxy Material						
	Application of All Plastic Material						
	Finish Colored Concrete						
	Gunite Nozzleman						
	Hand Powered Grinder						

Wage benefits key: BHR=basic hourly rate; H&W=health and welfare; IAF=industry advancement fund; LEG=legal fund; L&M=labor/management fund; PEN=pension fund; SAF=safety; SUI=supplemental unemployment insurance; S&L=SUI & LEG combined; TRN=training; THR=total hourly rate; VAC=vacation

Class Code	Classification of Laborers & Mechanics	BHR	H&W	PEN	TRN	Other Benefits	VAC	THR
Cement Masons								
	*See per diem note on last page							
A0404	Group IV, including:	44.43	8.80	11.80	1.53	L&M 0.10		66.66
	Preparing, scratching and browsing of all ceilings and walls, finished with terrazo or tile							
	Tunnel Worker							
A0405	Group V, including:	44.43	8.80	11.80	1.53	L&M 0.10		66.66
	Casting and finishing							
	EIFS Systems							
	Finishing of all interior and exterior plastering							
	Fireproofing (Pryocrete, Cafco, Albi-Clad, sprayed fiberglass)							
	Gypsum, Portland Cement							
	Kindred material and products							
	Operation and control of all types of plastering machines, including power tools and floats, used by the industry							
	Overcoating and maintenance of interior/exterior plaster surfaces							
	Plasterer							
	Veneer plastering process (Rapid Plaster, U.S.G. "Imperial Systems", and Pabcoat Systems")							
	Venetian plaster and color-integrated Italian/Middle-Eastern line plaster							
Culinary Workers								
A0501	Baker/Cook	29.95	7.53	8.68		LEG		46.16
A0503	General Helper	25.82	7.53	8.68		LEG		42.03
	Housekeeper							
	Janitor							
	Kitchen Helper							
A0504	Head Cook	29.95	7.53	8.68		LEG		46.16
A0505	Head Housekeeper	26.20	7.53	8.68		LEG		42.41
	Head Kitchen Help							
Dredgemen								
	*See per diem note on last page							
A0601	Assistant Engineer	46.91	11.40	14.75	1.00	L&M 0.10	0.05	74.21
	Craneman							

Wage benefits key: BHR=basic hourly rate; H&W=health and welfare; IAF=industry advancement fund; LEG=legal fund; L&M=labor/management fund; PEN=pension fund; SAF=safety; SUI=supplemental unemployment insurance; S&L=SUI & LEG combined; TRN=training; THR=total hourly rate; VAC=vacation

Class Code	Classification of Laborers & Mechanics	BHR	H&W	PEN	TRN	Other Benefits		THR
Dredgemen								
	*See per diem note on last page							
A0601	Assistant Engineer	46.91	11.40	14.75	1.00	**L&M** 0.10	0.05	74.21
	Electrical Generator Operator (primary pump/power barge/dredge) Engineer Welder							
A0602	Assistant Mate (deckhand)	45.65	11.40	14.75	1.00	**L&M** 0.10	0.05	72.95
A0603	Fireman	46.13	11.40	14.75	1.00	**L&M** 0.10	0.05	73.43
A0605	Leverman Clamshell	49.64	11.40	14.75	1.00	**L&M** 0.10	0.05	76.94
A0606	Leverman Hydraulic	47.74	11.40	14.75	1.00	**L&M** 0.10	0.05	75.04
A0607	Mate & Boatman	46.91	11.40	14.75	1.00	**L&M** 0.10	0.05	74.21
A0608	Oiler (dredge)	46.13	11.40	14.75	1.00	**L&M** 0.10	0.05	73.43
Electricians								
	*See per diem note on last page							
A0701	Inside Cable Splicer	44.44	14.40	14.22	0.95	**L&M** 0.25	**LEG** 0.15	74.41
A0702	Inside Journeyman Wireman, including:	44.44	14.40	14.22	0.95	**L&M** 0.25	**LEG** 0.15	74.41
	Technicians (including use of drones in electrical construction)							
A0703	Power Cable Splicer	65.19	14.40	19.15	0.95	**L&M** 0.25	**LEG** 0.15	100.09
A0704	Tele Com Cable Splicer	52.53	14.40	17.98	0.95	**L&M** 0.25	**LEG** 0.15	86.26
A0705	Power Journeyman Lineman, including:	63.44	14.40	19.09	0.95	**L&M** 0.25	**LEG** 0.15	98.28
	Power Equipment Operator Technician (including use of drones in electrical construction)							
A0706	Tele Com Journeyman Lineman, including:	50.78	14.40	17.92	0.95	**L&M** 0.25	**LEG** 0.15	84.45
	Technician (including use of drones in telecommunications construction) Tele Com Equipment Operator							

Wage benefits key: BHR=basic hourly rate; H&W=health and welfare; IAF=industry advancement fund; LEG=legal fund; L&M=labor/management fund; PEN=pension fund; SAF=safety; SUI=supplemental unemployment insurance; S&L=SUI & LEG combined; TRN=training; THR=total hourly rate; VAC=vacation

Class Code	Classification of Laborers & Mechanics	BHR	H&W	PEN	TRN	Other Benefits		THR
Electricians								
	*See per diem note on last page							
						L&M	**LEG**	
A0707	Straight Line Installer - Repairman	50.78	14.40	17.92	0.95	0.25	0.15	84.45
						L&M	**LEG**	
A0708	Powderman	61.44	14.40	19.03	0.95	0.25	0.15	96.22
						L&M	**LEG**	
A0710	Material Handler	28.07	14.02	5.84	0.15	0.15	0.15	48.38
						L&M	**LEG**	
A0712	Tree Trimmer Groundman	31.78	14.40	14.30	0.15	0.15	0.15	60.93
						L&M	**LEG**	
A0713	Journeyman Tree Trimmer	40.71	14.40	14.57	0.15	0.15	0.15	70.13
						L&M	**LEG**	
A0714	Vegetation Control Sprayer	44.26	14.40	14.68	0.15	0.15	0.15	73.79
						L&M	**LEG**	
A0715	Inside Journeyman Communications CO/PBX	44.44	14.40	14.22	0.95	0.25	0.15	74.41
Elevator Workers								
	*See per diem note on last page							
						L&M	**VAC**	
A0802	Elevator Constructor	46.08	16.07	20.56	0.70	1.00	5.11	89.52
						L&M	**VAC**	
A0803	Elevator Constructor Mechanic	65.83	16.07	20.56	0.70	1.00	7.30	111.46
Heat & Frost Insulators/Asbestos Workers								
	*See per diem note on last page							
						IAF	**LML**	
A0902	Asbestos Abatement-Mechanical Systems	41.35	9.24	11.12	1.50	0.14	0.05	63.40
						IAF	**LML**	
A0903	Asbestos Abatement/General Demolition All Systems	41.35	9.24	11.12	1.50	0.14	0.05	63.40
						IAF	**LML**	
A0904	Insulator, Group II	41.35	9.24	11.12	1.50	0.14	0.05	63.40
						IAF	**LML**	
A0905	Fire Stop	41.35	9.24	11.12	1.50	0.14	0.05	63.40
IronWorkers								
	*See per diem note on last page							
						L&M	**IAF**	
A1101	Ironworkers, including:	41.49	9.91	24.95	0.77	0.20	0.24	77.56

Wage benefits key: BHR=basic hourly rate; H&W=health and welfare; IAF=industry advancement fund; LEG=legal fund; L&M=labor/management fund; PEN=pension fund; SAF=safety; SUI=supplemental unemployment insurance; S&L=SUI & LEG combined; TRN=training; THR=total hourly rate; VAC=vacation

Class Code	Classification of Laborers & Mechanics	BHR	H&W	PEN	TRN	Other Benefits		THR
	IronWorkers *See per diem note on last page							
						L&M	**IAF**	
A1101	Ironworkers, including:	41.49	9.91	24.95	0.77	0.20	0.24	77.56
	Bender Operators Bridge & Structural Hangar Doors Hollow Metal Doors Industrial Doors Machinery Mover Ornamental Reinforcing Rigger Sheeter Signalman Stage Rigger Toxic Haz-Mat Work Welder							
						L&M	**IAF**	
A1102	Helicopter	42.49	9.91	24.95	0.77	0.20	0.24	78.56
	Helicopter (used for rigging and setting) Tower (energy producing windmill type towers to include nacelle and blades)							
						L&M	**IAF**	
A1103	Fence/Barrier Installer	37.99	9.91	24.95	0.77	0.20	0.24	74.06
						L&M	**IAF**	
A1104	Guard Rail Layout Man	38.73	9.91	24.95	0.77	0.20	0.24	74.80
						L&M	**IAF**	
A1105	Guard Rail Installer	38.99	9.91	24.95	0.77	0.20	0.24	75.06
	Laborers (The Alaska areas north of N63 latitude and east of W138 longitude) *See per diem note on last page							
						L&M	**LEG**	
N1201	Group I, including:	36.00	9.55	21.16	1.65	0.30	0.20	68.86
	Asphalt Worker (shovelman, plant crew) Brush Cutter Camp Maintenance Laborer Carpenter Tender or Helper Choke Setter, Hook Tender, Rigger, Signalman Concrete Labor (curb & gutter, chute handler, curing, grouting, screeding) Crusher Plant Laborer Demolition Laborer							

Wage benefits key: BHR=basic hourly rate; H&W=health and welfare; IAF=industry advancement fund; LEG=legal fund; L&M=labor/management fund; PEN=pension fund; SAF=safety; SUI=supplemental unemployment insurance; S&L=SUI & LEG combined; TRN=training; THR=total hourly rate; VAC=vacation

Class Code	Classification of Laborers & Mechanics	BHR	H&W	PEN	TRN	Other Benefits		THR
						L&M	LEG	
Laborers (The Alaska areas north of N63 latitude and east of W138 longitude) *See per diem note on last page								
N1201	Group I, including:	36.00	9.55	21.16	1.65	0.30	0.20	68.86
	Ditch Digger							
	Dumpman							
	Environmental Laborer (hazard/toxic waste, oil spill)							
	Fence Installer							
	Fire Watch Laborer							
	Flagman							
	Form Stripper							
	General Laborer							
	Guardrail Laborer, Bridge Rail Installer							
	Hydro Seeder Nozzleman							
	Laborer, Building							
	Landscaper or Planter							
	Laying of Mortarless Decorative Block (retaining walls, flowered decorative block 4 feet or less - highway or landscape work)							
	Material Handler							
	Pneumatic or Power Tools							
	Portable or Chemical Toilet Serviceman							
	Pump Man or Mixer Man							
	Railroad Track Laborer							
	Sandblast, Pot Tender							
	Saw Tender							
	Slurry Work							
	Steam Cleaner Operator							
	Steam Point or Water Jet Operator							
	Storm Water Pollution Protection Plan Worker (SWPPP Worker - erosion and sediment control Laborer)							
	Tank Cleaning							
	Utiliwalk & Utilidor Laborer							
	Watchman (construction projects)							
	Window Cleaner							
						L&M	LEG	
N1202	Group II, including:	37.00	9.55	21.16	1.65	0.30	0.20	69.86
	Burning & Cutting Torch							
	Cement or Lime Dumper or Handler (sack or bulk)							
	Certified Erosion Sediment Control Lead (CESCL Laborer)							
	Choker Splicer							
	Chucktender (wagon, air-track & hydraulic drills)							
	Concrete Laborer (power buggy, concrete saws, pumpcrete nozzleman, vibratorman)							
	Culvert Pipe Laborer							
	Cured Inplace Pipelayer							

Wage benefits key: BHR=basic hourly rate; H&W=health and welfare; IAF=industry advancement fund; LEG=legal fund; L&M=labor/management fund; PEN=pension fund; SAF=safety; SUI=supplemental unemployment insurance; S&L=SUI & LEG combined; TRN=training; THR=total hourly rate; VAC=vacation

Class Code	Classification of Laborers & Mechanics	BHR	H&W	PEN	TRN	Other Benefits		THR
						L&M	LEG	
Laborers (The Alaska areas north of N63 latitude and east of W138 longitude) *See per diem note on last page								
N1202	Group II, including:	37.00	9.55	21.16	1.65	0.30	0.20	69.86
	Environmental Laborer (asbestos, marine work)							
	Floor Preparation, Core Drilling							
	Foam Gun or Foam Machine Operator							
	Green Cutter (dam work)							
	Gunite Operator							
	Hod Carrier							
	Jackhammer/Chipping Gun or Pavement Breaker							
	Laser Instrument Operator							
	Laying of Mortarless Decorative Block (retaining walls, flowered decorative block over 4 feet - highway or landscape work)							
	Mason Tender & Mud Mixer (sewer work)							
	Pilot Car							
	Pipelayer Helper							
	Plasterer, Bricklayer & Cement Finisher Tender							
	Powderman Helper							
	Power Saw Operator							
	Railroad Switch Layout Laborer							
	Sandblaster							
	Scaffold Building & Erecting							
	Sewer Caulker							
	Sewer Plant Maintenance Man							
	Thermal Plastic Applicator							
	Timber Faller, Chainsaw Operator, Filer							
	Timberman							
						L&M	LEG	
N1203	Group III, including:	37.90	9.55	21.16	1.65	0.30	0.20	70.76
	Bit Grinder							
	Camera/Tool/Video Operator							
	Guardrail Machine Operator							
	High Rigger & Tree Topper							
	High Scaler							
	Multiplate							
	Plastic Welding							
	Slurry Seal Squeegee Man							
	Traffic Control Supervisor							
	Welding Certified (in connection with laborer's work)							
						L&M	LEG	
N1204	Group IIIA	41.78	9.55	21.16	1.65	0.30	0.20	74.64
	Asphalt Raker, Asphalt Belly Dump Lay Down							
	Drill Doctor (in the field)							

Wage benefits key: BHR=basic hourly rate; H&W=health and welfare; IAF=industry advancement fund; LEG=legal fund; L&M=labor/management fund; PEN=pension fund; SAF=safety; SUI=supplemental unemployment insurance; S&L=SUI & LEG combined; TRN=training; THR=total hourly rate; VAC=vacation

Class Code	Classification of Laborers & Mechanics	BHR	H&W	PEN	TRN	Other Benefits		THR
						L&M	LEG	
Laborers (The Alaska areas north of N63 latitude and east of W138 longitude) *See per diem note on last page								
N1204	Group IIIA	41.78	9.55	21.16	1.65	0.30	0.20	74.64
	Driller (including, but not limited to wagon drills, air-track drills, hydraulic drills)							
	Pioneer Drilling & Drilling Off Tugger (all type drills)							
	Pipelayers							
	Powderman (Employee Possessor)							
	Storm Water Pollution Protection Plan Specialist (SWPPP Specialist)							
	Traffic Control Supervisor, DOT Qualified							
						L&M	LEG	
N1205	Group IV	25.57	9.55	21.16	1.65	0.30	0.20	58.43
	Final Building Cleanup							
	Permanent Yard Worker							
						L&M	LEG	
N1206	Group IIIB	47.36	5.50	21.16	1.65	0.30	0.20	76.17
	Driller (including, but not limited to wagon drills, air-track drills, hydraulic drills)(over 5,000 hours)							
	Federal Powderman (Responsible Person in Charge)							
	Grade Checking (setting or transferring of grade marks, line and grade, GPS, drones)							
	Pioneer Drilling & Drilling Off Tugger (all type drills)(over 5,000 hours)							
	Stake Hopper							
Laborers (The area that is south of N63 latitude and west of W138 longitude) *See per diem note on last page								
						L&M	LEG	
S1201	Group I, including:	36.00	9.55	21.16	1.65	0.30	0.20	68.86
	Asphalt Worker (shovelman, plant crew)							
	Brush Cutter							
	Camp Maintenance Laborer							
	Carpenter Tender or Helper							
	Choke Setter, Hook Tender, Rigger, Signalman							
	Concrete Labor (curb & gutter, chute handler, curing, grouting, screeding)							
	Crusher Plant Laborer							
	Demolition Laborer							
	Ditch Digger							
	Dumpman							
	Environmental Laborer (hazard/toxic waste, oil spill)							
	Fence Installer							
	Fire Watch Laborer							
	Flagman							

Wage benefits key: BHR=basic hourly rate; H&W=health and welfare; IAF=industry advancement fund; LEG=legal fund; L&M=labor/management fund; PEN=pension fund; SAF=safety; SUI=supplemental unemployment insurance; S&L=SUI & LEG combined; TRN=training; THR=total hourly rate; VAC=vacation

Class Code	Classification of Laborers & Mechanics	BHR	H&W	PEN	TRN	Other Benefits		THR
						L&M	LEG	

Laborers (The area that is south of N63 latitude and west of W138 longitude)
*See per diem note on last page

S1201	Group I, including:	36.00	9.55	21.16	1.65	0.30	0.20	68.86

Form Stripper
General Laborer
Guardrail Laborer, Bridge Rail Installer
Hydro Seeder Nozzleman
Laborer, Building
Landscaper or Planter
Laying of Mortarless Decorative Block (retaining walls, flowered decorative block 4 feet or less - highway or landscape work)
Material Handler
Pneumatic or Power Tools
Portable or Chemical Toilet Serviceman
Pump Man or Mixer Man
Railroad Track Laborer
Sandblast, Pot Tender
Saw Tender
Slurry Work
Steam Cleaner Operator
Steam Point or Water Jet Operator
Storm Water Pollution Protection Plan Worker (SWPPP Worker - erosion and sediment control Laborer)
Tank Cleaning
Utiliwalk & Utilidor Laborer
Watchman (construction projects)
Window Cleaner

						L&M	LEG	
S1202	Group II, including:	37.00	9.55	21.16	1.65	0.30	0.20	69.86

Burning & Cutting Torch
Cement or Lime Dumper or Handler (sack or bulk)
Certified Erosion Sediment Control Lead (CESCL Laborer)
Choker Splicer
Chucktender (wagon, air-track & hydraulic drills)
Concrete Laborer (power buggy, concrete saws, pumpcrete nozzleman, vibratorman)
Culvert Pipe Laborer
Cured Inplace Pipelayer
Environmental Laborer (asbestos, marine work)
Floor Preparation, Core Drilling
Foam Gun or Foam Machine Operator
Green Cutter (dam work)
Gunite Operator
Hod Carrier

Wage benefits key: BHR=basic hourly rate; H&W=health and welfare; IAF=industry advancement fund; LEG=legal fund; L&M=labor/management fund; PEN=pension fund; SAF=safety; SUI=supplemental unemployment insurance; S&L=SUI & LEG combined; TRN=training; THR=total hourly rate; VAC=vacation

Class Code	Classification of Laborers & Mechanics	BHR	H&W	PEN	TRN	Other Benefits		THR
						L&M	LEG	

Laborers (The area that is south of N63 latitude and west of W138 longitude)
*See per diem note on last page

S1202	Group II, including:	37.00	9.55	21.16	1.65	0.30	0.20	69.86

Jackhammer/Chipping Gun or Pavement Breaker
Laser Instrument Operator
Laying of Mortarless Decorative Block (retaining walls, flowered decorative block over 4 feet - highway or landscape work)
Mason Tender & Mud Mixer (sewer work)
Pilot Car
Pipelayer Helper
Plasterer, Bricklayer & Cement Finisher Tender
Powderman Helper
Power Saw Operator
Railroad Switch Layout Laborer
Sandblaster
Scaffold Building & Erecting
Sewer Caulker
Sewer Plant Maintenance Man
Thermal Plastic Applicator
Timber Faller, Chainsaw Operator, Filer
Timberman

						L&M	LEG	
S1203	Group III, including:	37.90	9.55	21.16	1.65	0.30	0.20	70.76

Bit Grinder
Camera/Tool/Video Operator
Guardrail Machine Operator
High Rigger & Tree Topper
High Scaler
Multiplate
Plastic Welding
Slurry Seal Squeegee Man
Traffic Control Supervisor
Welding Certified (in connection with laborer's work)

						L&M	LEG	
S1204	Group IIIA	41.78	9.55	21.16	1.65	0.30	0.20	74.64

Asphalt Raker, Asphalt Belly Dump Lay Down
Drill Doctor (in the field)
Driller (including, but not limited to wagon drills, air-track drills, hydraulic drills)
Pioneer Drilling & Drilling Off Tugger (all type drills)
Pipelayers
Powderman (Employee Possessor)
Storm Water Pollution Protection Plan Specialist (SWPPP Specialist)

Wage benefits key: BHR=basic hourly rate; H&W=health and welfare; IAF=industry advancement fund; LEG=legal fund; L&M=labor/management fund; PEN=pension fund; SAF=safety; SUI=supplemental unemployment insurance; S&L=SUI & LEG combined; TRN=training; THR=total hourly rate; VAC=vacation

Class Code	Classification of Laborers & Mechanics	BHR	H&W	PEN	TRN	Other Benefits		THR
Laborers (The area that is south of N63 latitude and west of W138 longitude) *See per diem note on last page								
						L&M	**LEG**	
S1204	Group IIIA	41.78	9.55	21.16	1.65	0.30	0.20	74.64
	Traffic Control Supervisor, DOT Qualified							
						L&M	**LEG**	
S1205	Group IV	25.57	9.55	21.16	1.65	0.30	0.20	58.43
	Final Building Cleanup Permanent Yard Worker							
						L&M	**LEG**	
S1206	Group IIIB	47.36	5.50	21.16	1.65	0.30	0.20	76.17
	Driller (including, but not limited to wagon drills, air-track drills, hydraulic drills)(over 5,000 hours) Federal Powderman (Responsible Person in Charge) Grade Checking (setting or transferring of grade marks, line and grade, GPS, drones) Pioneer Drilling & Drilling Off Tugger (all type drills)(over 5,000 hours) Stake Hopper							
Millwrights *See per diem note on last page								
						L&M		
A1251	Millwright (journeyman)	46.48	10.35	12.87	1.10	0.40	0.05	71.25
						L&M		
A1252	Millwright Welder	47.48	10.35	12.87	1.10	0.40	0.05	72.25
Painters, Region I (North of N63 latitude) *See per diem note on last page								
						L&M		
N1301	Group I, including:	36.08	9.27	15.10	1.08	0.07		61.60
	Brush General Painter Hand Taping Hazardous Material Handler Lead-Based Paint Abatement Roll							
						L&M		
N1302	Group II, including:	36.60	9.27	15.10	1.08	0.07		62.12
	Bridge Painter Epoxy Applicator General Drywall Finisher Hand/Spray Texturing Industrial Coatings Specialist							

Wage benefits key: BHR=basic hourly rate; H&W=health and welfare; IAF=industry advancement fund; LEG=legal fund; L&M=labor/management fund; PEN=pension fund; SAF=safety; SUI=supplemental unemployment insurance; S&L=SUI & LEG combined; TRN=training; THR=total hourly rate; VAC=vacation

Class Code	Classification of Laborers & Mechanics	BHR	H&W	PEN	TRN	Other Benefits	THR
Painters, Region I (North of N63 latitude) *See per diem note on last page							
						L&M	
N1302	Group II, including:	36.60	9.27	15.10	1.08	0.07	62.12
	Machine/Automatic Taping Pot Tender Sandblasting Specialty Painter Spray Structural Steel Painter Wallpaper/Vinyl Hanger						
N1304	Group IV, including:	42.74	9.27	18.21	1.05	0.05	71.32
	Glazier Storefront/Automatic Door Mechanic						
N1305	Group V, including:	39.86	9.27	5.00	1.10	0.10	55.33
	Carpet Installer Floor Coverer Heat Weld/Cove Base Linoleum/Soft Tile Installer						
N1306	Group VI, including:	50.44	10.23	5.00	1.10	0.10	66.87
	Traffic Control Striper						
Painters, Region II (South of N63 latitude) *See per diem note on last page							
						L&M	
S1301	Group I, including :	33.22	9.27	15.95	1.08	0.07	59.59
	Brush General Painter Hand Taping Hazardous Material Handler Lead-Based Paint Abatement Roll Spray						
						L&M	
S1302	Group II, including :	34.47	9.27	15.95	1.08	0.07	60.84
	General Drywall Finisher Hand/Spray Texturing Machine/Automatic Taping Wallpaper/Vinyl Hanger						

Wage benefits key: BHR=basic hourly rate; H&W=health and welfare; IAF=industry advancement fund; LEG=legal fund; L&M=labor/management fund; PEN=pension fund; SAF=safety; SUI=supplemental unemployment insurance; S&L=SUI & LEG combined; TRN=training; THR=total hourly rate; VAC=vacation

Class Code	Classification of Laborers & Mechanics	BHR	H&W	PEN	TRN	Other Benefits	THR
Painters, Region II (South of N63 latitude) *See per diem note on last page							
						L&M	
S1303	Group III, including :	34.57	9.27	15.95	1.08	0.07	60.94
	Bridge Painter Epoxy Applicator Industrial Coatings Specialist Pot Tender Sandblasting Specialty Painter Structural Steel Painter						
						L&M	
S1304	Group IV, including:	42.95	9.27	17.25	1.08	0.07	70.62
	Glazier Storefront/Automatic Door Mechanic						
						L&M	
S1305	Group V, including:	39.86	9.27	5.00	1.10	0.10	55.33
	Carpet Installer Floor Coverer Heat Weld/Cove Base Linoleum/Soft Tile Installer						
S1306	Group VI, including:	50.44	10.23	5.00	1.10	0.10	66.87
	Traffic Control Striper						
Piledrivers *See per diem note on last page							
						L&M	**IAF**
A1401	Piledriver	43.34	10.35	15.82	1.75	0.20	0.20 71.66
	Assistant Dive Tender Carpenter/Piledriver Rigger Sheet Stabber Skiff Operator						
						L&M	**IAF**
A1402	Piledriver-Welder/Toxic Worker	44.34	10.35	15.82	1.75	0.20	0.20 72.66
						L&M	**IAF**
A1403	Remotely Operated Vehicle Pilot/Technician	47.65	10.35	15.82	1.75	0.20	0.20 75.97
	Single Atmosphere Suit, Bell or Submersible Pilot						
						L&M	**IAF**
A1404	Diver (working) **See note on last page	87.45	10.35	15.82	1.75	0.20	0.20 115.77

Wage benefits key: BHR=basic hourly rate; H&W=health and welfare; IAF=industry advancement fund; LEG=legal fund; L&M=labor/management fund; PEN=pension fund; SAF=safety; SUI=supplemental unemployment insurance; S&L=SUI & LEG combined; TRN=training; THR=total hourly rate; VAC=vacation

Class Code	Classification of Laborers & Mechanics	BHR	H&W	PEN	TRN	Other Benefits		THR
Piledrivers								
	*See per diem note on last page							
						L&M	**IAF**	
A1405	Diver (standby) **See note on last page	47.65	10.35	15.82	1.75	0.20	0.20	75.97
						L&M	**IAF**	
A1406	Dive Tender **See note on last page	46.65	10.35	15.82	1.75	0.20	0.20	74.97
						L&M	**IAF**	
A1407	Welder (American Welding Society, Certified Welding Inspector)	48.90	10.35	15.82	1.75	0.20	0.20	77.22
Plumbers, Region I (North of N63 latitude)								
	*See per diem note on last page							
						L&M	**S&L**	
N1501	Journeyman Pipefitter	46.06	11.75	17.45	1.50	0.75		77.51
	Plumber							
	Welder							
Plumbers, Region II (South of N63 latitude)								
	*See per diem note on last page							
						L&M		
S1501	Journeyman Pipefitter	41.00	11.88	15.27	1.55	0.20		69.90
	Plumber							
	Welder							
Plumbers, Region IIA (1st Judicial District)								
	*See per diem note on last page							
						L&M		
X1501	Journeyman Pipefitter	41.50	13.67	11.75	2.70	0.24		69.86
	Plumber							
	Welder							
Power Equipment Operators								
	*See per diem note on last page							
						L&M		
A1601	Group I, including:	47.74	11.40	14.75	1.00	0.10	0.05	75.04
	Asphalt Roller: Breakdown, Intermediate, and Finish							
	Back Filler							
	Barrier Machine (Zipper)							
	Beltcrete with Power Pack & similar conveyors							
	Bending Machine							
	Boat Coxswain							
	Bulldozer							
	Cableways, Highlines & Cablecars							

Class Code	Classification of Laborers & Mechanics	BHR	H&W	PEN	TRN	Other Benefits		THR
						L&M		
A1601	Group I, including:	47.74	11.40	14.75	1.00	0.10	0.05	75.04

Power Equipment Operators

*See per diem note on last page

Cleaning Machine

Coating Machine

Concrete Hydro Blaster

Cranes (45 tons & under or 150 feet of boom & under (including jib & attachments))

(a) Hydralifts or Transporters, (all track or truck type)

(b) Derricks

(c) Overhead

Crushers

Deck Winches, Double Drum

Ditching or Trenching Machine (16 inch or over)

Drag Scraper, Yarder, and similar types

Drilling Machines, Core, Cable, Rotary and Exploration

Finishing Machine Operator, Concrete Paving, Laser Screed, Sidewalk, Curb & Gutter Machine

Grade Checker and/or Line and Grade including Drone

Helicopters

Hover Craft, Flex Craft, Loadmaster, Air Cushion, All-Terrain Vehicle, Rollagon, Bargecable, Nodwell, & Snow Cat

Hydro Ax, Feller Buncher & similar

Hydro Excavation (Vac-Truck and Similar)

Loaders (2 1/2 yards through 5 yards, including all attachments):

(a) Forklifts (with telescopic boom & swing attachment)

(b) Front End & Overhead, (2-1/2 yards through 5 yards)

(c) Loaders, (with forks or pipe clamp)

(d) Loaders, (elevating belt type, Euclid & similar types)

Material Transfer Vehicle (Elevating Grader, Pickup Machine, and similar types)

Mechanic, Welder, Bodyman, Electrical, Camp & Maintenance Engineer

Micro Tunneling Machine

Mixers: Mobile type with hoist combination

Motor Patrol Grader

Mucking Machine: Mole, Tunnel Drill, Horizontal/Directional Drill Operator and/or Shield

Off-Road Hauler (including Articulating and Haul Trucks)

Operator on Dredges

Piledriver Engineer, L.B. Foster, Puller or similar paving breaker

Plant Operator (Asphalt & Concrete)

Power Plant, Turbine Operator 200 k.w & over (power plants or combination of power units over 300 k.w.)

Remote Controlled Equipment

Scraper (through 40 yards)

Class Code	Classification of Laborers & Mechanics	BHR	H&W	PEN	TRN	Other Benefits		THR
Power Equipment Operators *See per diem note on last page								
						L&M		
A1601	Group I, including:	47.74	11.40	14.75	1.00	0.10	0.05	75.04
	Service Oiler/Service Engineer Shot Blast Machine Shovels, Backhoes, Excavators with all attachments, and Gradealls (3 yards & under) Sideboom (under 45 tons) Sub Grader (Gurries & similar types) Tack Tractor Truck Mounted Concrete Pump, Conveyor/Tele-belt, & Creter Wate Kote Machine							
						L&M		
A1602	Group IA, including:	49.64	11.40	14.75	1.00	0.10	0.05	76.94
	Camera/Tool/Video Operator (Slipline) Certified Welder, Electrical Mechanic, Camp Maintenance Engineer, Mechanic (over 10,000 hours) Cranes (over 45 tons or 150 feet including jib & attachments) (a) Clamshells & Draglines (over 3 yards) (b) Tower Cranes Licensed Water/Waste Water Treatment Operator Loaders (over 5 yards) Motor Patrol Grader, Dozer, Grade Tractor (finish: when finishing to final grade and/or to hubs, or for asphalt) Power Plants (1000 k.w. & over) Profiler, Reclaimer, and Roto-Mill Quad Scrapers (over 40 yards) Screed Shovels, Backhoes, Excavators with all attachments (over 3 yards) Sidebooms (over 45 tons) Slip Form Paver, C.M.I. & similar types Topside (Asphalt Paver, Slurry machine, Spreaders, and similar types)							
						L&M		
A1603	Group II, including:	46.91	11.40	14.75	1.00	0.10	0.05	74.21
	Boiler - Fireman Cement Hogs & Concrete Pump Operator Conveyors (except those listed in Group I) Hoists on Steel Erection, Towermobiles & Air Tuggers Horizontal/Directional Drill Locator Locomotives, Rod & Geared Engines Mixers Screening, Washing Plant							

Wage benefits key: BHR=basic hourly rate; H&W=health and welfare; IAF=industry advancement fund; LEG=legal fund; L&M=labor/management fund; PEN=pension fund; SAF=safety; SUI=supplemental unemployment insurance; S&L=SUI & LEG combined; TRN=training; THR=total hourly rate; VAC=vacation

Class Code	Classification of Laborers & Mechanics	BHR	H&W	PEN	TRN	Other Benefits		THR
Power Equipment Operators *See per diem note on last page								
						L&M		
A1603	Group II, including:	46.91	11.40	14.75	1.00	0.10	0.05	74.21
	Sideboom (cradling rock drill, regardless of size)							
	Skidder							
	Trenching Machines (under 16 inches)							
	Water/Waste Water Treatment Operator							
						L&M		
A1604	Group III, including:	46.13	11.40	14.75	1.00	0.10	0.05	73.43
	"A" Frame Trucks, Deck Winches							
	Bombardier (tack or tow rig)							
	Boring Machine							
	Brooms, Power (sweeper, elevator, vacuum, or similar)							
	Bump Cutter							
	Compressor							
	Farm Tractor							
	Forklift, Industrial Type							
	Gin Truck or Winch Truck (with poles when used for hoisting)							
	Hoists, Air Tuggers, Elevators							
	Loaders:							
	(a) Elevating-Athey, Barber Greene & similar types							
	(b) Forklifts or Lumber Carrier (on construction job sites)							
	(c) Forklifts, (with tower)							
	(d) Overhead & Front End, (under 2-l/2 yards)							
	Locomotives: Dinkey (air, steam, gas & electric) Speeders							
	Mechanics, Light Duty							
	Oil, Blower Distribution							
	Posthole Digger, Mechanical							
	Pot Fireman (power agitated)							
	Power Plant, Turbine Operator, (under 200 k.w.)							
	Pumps, Water							
	Roller (other than Asphalt)							
	Saws, Concrete							
	Skid Hustler							
	Skid Steer (with all attachments)							
	Stake Hopper							
	Straightening Machine							
	Tow Tractor							
						L&M		
A1605	Group IV, including:	39.42	11.40	14.75	1.00	0.10	0.05	66.72
	Crane Assistant Engineer/Rig Oiler							
	Drill Helper							
	Parts & Equipment Coordinator							

Wage benefits key: BHR=basic hourly rate; H&W=health and welfare; IAF=industry advancement fund; LEG=legal fund; L&M=labor/management fund; PEN=pension fund; SAF=safety; SUI=supplemental unemployment insurance; S&L=SUI & LEG combined; TRN=training; THR=total hourly rate; VAC=vacation

Class Code	Classification of Laborers & Mechanics	BHR	H&W	PEN	TRN	Other Benefits		THR
Power Equipment Operators *See per diem note on last page								
						L&M		
A1605	Group IV, including:	39.42	11.40	14.75	1.00	0.10	0.05	66.72
	Spotter							
	Steam Cleaner							
	Swamper (on trenching machines or shovel type equipment)							
Roofers *See per diem note on last page								
						L&M		
A1701	Roofer & Waterproofer	47.62	13.75	3.91	0.81	0.10	0.06	66.25
						L&M		
A1702	Roofer Material Handler	34.23	13.75	3.91	0.81	0.10	0.06	52.86
Sheet Metal Workers, Region I (North of N63 latitude) *See per diem note on last page								
						L&M		
N1801	Sheet Metal Journeyman	50.83	12.25	14.86	1.80	0.12		79.86
	Air Balancing and duct cleaning of HVAC systems							
	Brazing, soldering or welding of metals							
	Demolition of sheet metal HVAC systems							
	Fabrication and installation of exterior wall sheathing, siding, metal roofing, flashing, decking and architectural sheet metal work							
	Fabrication and installation of heating, ventilation and air conditioning ducts and equipment							
	Fabrication and installation of louvers and hoods							
	Fabrication and installation of sheet metal lagging							
	Fabrication and installation of stainless steel commercial or industrial food service equipment							
	HVAC-R Service Mechanic, servicing and maintaining HVAC-R Systems							
	Manufacture, fabrication assembly, installation and alteration of all ferrous and nonferrous metal work							
	Metal lavatory partitions							
	Preparation of drawings taken from architectural and engineering plans required for fabrication and erection of sheet metal work							
	Sheet Metal shelving							
	Sheet Metal venting, chimneys and breaching							
	Skylight installation							
Sheet Metal Workers, Region II (South of N63 latitude) *See per diem note on last page								

Wage benefits key: BHR=basic hourly rate; H&W=health and welfare; IAF=industry advancement fund; LEG=legal fund; L&M=labor/management fund; PEN=pension fund; SAF=safety; SUI=supplemental unemployment insurance; S&L=SUI & LEG combined; TRN=training; THR=total hourly rate; VAC=vacation

Class Code	Classification of Laborers & Mechanics	BHR	H&W	PEN	TRN	Other Benefits	THR
Sheet Metal Workers, Region II (South of N63 latitude) *See per diem note on last page							
S1801	Sheet Metal Journeyman	45.35	12.23	14.70	1.83	L&M 0.43	74.54
	Air Balancing and duct cleaning of HVAC systems Brazing, soldering or welding of metals Demolition of sheet metal HVAC systems Fabrication and installation of exterior wall sheathing, siding, metal roofing, flashing, decking and architectural sheet metal work Fabrication and installation of heating, ventilation and air conditioning ducts and equipment Fabrication and installation of louvers and hoods Fabrication and installation of sheet metal lagging Fabrication and installation of stainless steel commercial or industrial food service equipment HVAC-R Service Mechanic, servicing and maintaining HVAC-R Systems Manufacture, fabrication assembly, installation and alteration of all ferrous and nonferrous metal work Metal lavatory partitions Preparation of drawings taken from architectural and engineering plans required for fabrication and erection of sheet metal work Sheet Metal shelving Sheet Metal venting, chimneys and breaching Skylight installation						
Sprinkler Fitters *See per diem note on last page							
A1901	Sprinkler Fitter	54.01	10.55	18.25	0.52	L&M 0.25	83.58
Surveyors *See per diem note on last page							
A2001	Chief of Parties	54.50	12.48	13.64	1.20	L&M 0.10	81.92
A2002	Party Chief	50.69	12.48	13.64	1.20	L&M 0.10	78.11
A2003	Line & Grade Technician/Office Technician/GPS, Drones	47.94	12.48	13.64	1.20	L&M 0.10	75.36
A2004	Associate Party Chief (including Instrument Person & Head Chain Person)/Stake Hop/Grademan	45.69	12.48	13.64	1.20	L&M 0.10	73.11

Wage benefits key: BHR=basic hourly rate; H&W=health and welfare; IAF=industry advancement fund; LEG=legal fund; L&M=labor/management fund; PEN=pension fund; SAF=safety; SUI=supplemental unemployment insurance; S&L=SUI & LEG combined; TRN=training; THR=total hourly rate; VAC=vacation

Class Code	Classification of Laborers & Mechanics	BHR	H&W	PEN	TRN	Other Benefits	THR
Surveyors							
	*See per diem note on last page						
						L&M	
A2006	Chain Person (for crews with more than 2 people)	41.09	12.48	13.64	1.20	0.10	68.51
Truck Drivers							
	*See per diem note on last page						
						L&M	
A2101	Group I, including:	46.84	12.48	13.64	1.20	0.10	74.26
	Air/Sea Traffic Controllers						
	Ambulance/Fire Truck Driver (EMT certified)						
	Boat Coxswain						
	Captains & Pilots (air & water)						
	Deltas, Commanders, Rollagons, & similar equipment (when pulling sleds, trailers or similar equipment)						
	Dump Trucks (including articulating end dumps, rockbuggy, side dump, belly dump, & trucks with pups) over 40 yards up to & including 60 yards						
	Fueler						
	Helicopter Transporter						
	Liquid Vac Truck/Super Vac Truck						
	Material Coordinator or Purchasing Agent						
	Oil Distributor Truck						
	Ready-mix (over 12 yards up to & including 15 yards) (over 15 yards to be negotiated)						
	Semi with Double Box Mixer						
	Tireman, Medium Duty (Truck Tires up to 1200-24")						
	Water Wagon (250 Bbls and above)						
						L&M	
A2102	Group 1A including:	48.19	12.48	13.64	1.20	0.10	75.61
	Dump Trucks (including rockbuggy, side dump, belly dump & trucks with pups) over 60 yards up to & including 100 yards (over 100 yards to be negotiated)						
	Jeeps (driver under load)						
	Lowboys, including tractor attached trailers & jeeps, up to & including 12 axles (over 12 axles or 150 tons to be negotiated)						
	Tireman Heavy Duty (earthmover tires, i.e., loader, scraper, haul truck)						
						L&M	
A2103	Group II, including:	45.51	12.48	13.64	1.20	0.10	72.93
	All Deltas, Commanders, Rollagons, & similar equipment						
	Batch Trucks (8 yards & up)						
	Batch Trucks (up to & including 7 yards)						
	Boom Truck/Knuckle Truck (over 5 tons)						
	Cacasco Truck/Heat Stress Truck						
	Construction and Material Safety Technician						

Class Code	Classification of Laborers & Mechanics	BHR	H&W	PEN	TRN	Other Benefits	THR
Truck Drivers							
	*See per diem note on last page						
						L&M	
A2103	Group II, including:	45.51	12.48	13.64	1.20	0.10	72.93
	Dump Trucks (including articulating end dump, rockbuggy, side dump, belly dump, & trucks with pups) over 20 yards up to & including 40 yards						
	Gin Pole Truck, Winch Truck, Wrecker (truck mounted "A" frame manufactured rating over 5 tons)						
	Mechanics						
	Partsman						
	Ready-mix (up to & including 12 yards)						
	Stringing Truck						
	Turn-O-Wagon or DW-10 (not self loading)						
						L&M	
A2104	Group III, including:	44.64	12.48	13.64	1.20	0.10	72.06
	Boom Truck/Knuckle Truck (up to & including 5 tons)						
	Dump Trucks (including articulating end dump, rockbuggy, side dump, belly dump, & trucks with pups) over 10 yards up to & including 20 yards						
	Expeditor (electrical & pipefitting materials)						
	Gin Pole Truck, Winch Truck, Wrecker (truck mounted "A" frame manufactured rating 5 tons & under)						
	Greaser - Shop						
	Semi or Truck & Trailer						
	Thermal Plastic Layout Technician						
	Traffic Control Technician						
	Trucks/Jeeps (push or pull)						
						L&M	
A2105	Group IV, including:	44.02	12.48	13.64	1.20	0.10	71.44
	Air Cushion or similar type vehicle						
	All Terrain Vehicle						
	Buggymobile						
	Bull Lift & Fork Lift, Fork Lift with Power Boom & Swing Attachment (over 5 tons)						
	Bus Operator (over 30 passengers)						
	Cement Spreader, Dry						
	Combination Truck-Fuel & Grease						
	Compactor (when pulled by rubber tired equipment)						
	Dump Trucks (including rockbuggy, side dump, belly dump, & trucks with pups) up to & including 10 yards						
	Dumpster						
	Expeditor (general)						
	Fire Truck/Ambulance Driver						
	Flat Beds, Dual Rear Axle						
	Foam Distributor Truck Dual Axle						
	Front End Loader with Fork						

Class Code	Classification of Laborers & Mechanics	BHR	H&W	PEN	TRN	Other Benefits	THR
Truck Drivers							
	*See per diem note on last page						
						L&M	
A2105	Group IV, including:	44.02	12.48	13.64	1.20	0.10	71.44
	Grease Truck						
	Hydro Seeder, Dual Axle						
	Hyster Operators (handling bulk aggregate)						
	Loadmaster (air & water operations)						
	Lumber Carrier						
	Ready-mix, (up to & including 7 yards)						
	Rigger (air/water/oilfield)						
	Tireman, Light Duty						
	Track Truck Equipment						
	Truck Vacuum Sweeper						
	Warehouseperson						
	Water Truck (Below 250 Bbls)						
	Water Truck (straight)						
	Water Wagon, Semi						
						L&M	
A2106	Group V, including:	43.22	12.48	13.64	1.20	0.10	70.64
	Buffer Truck						
	Bull Lifts & Fork Lifts, Fork Lifts with Power Boom & Swing Attachments (up to & including 5 tons)						
	Bus Operator (up to 30 passengers)						
	Farm Type Rubber Tired Tractor (when material handling or pulling wagons on a construction project)						
	Flat Beds, Single Rear Axle						
	Foam Distributor Truck Single Axle						
	Fuel Handler (station/bulk attendant)						
	Gear/Supply Truck						
	Gravel Spreader Box Operator on Truck						
	Hydro Seeder, Single Axle						
	Pickups (pilot cars & all light-duty vehicles)						
	Rigger						
	Swamper						
	Tack Truck (welders/gear)						
	Team Drivers (horses, mules, & similar equipment)						
Tunnel Workers, Laborers (The Alaska areas north of N63 latitude and east of W138 longitude)							
	*See per diem note on last page						
						L&M	**LEG**
N2201	Group I, including:	39.60	9.55	21.16	1.65	0.30	0.20	72.46
	Brakeman						
	Mucker						

Wage benefits key: BHR=basic hourly rate; H&W=health and welfare; IAF=industry advancement fund; LEG=legal fund; L&M=labor/management fund; PEN=pension fund; SAF=safety; SUI=supplemental unemployment insurance; S&L=SUI & LEG combined; TRN=training; THR=total hourly rate; VAC=vacation

Class Code	Classification of Laborers & Mechanics	BHR	H&W	PEN	TRN	Other Benefits		THR
	Tunnel Workers, Laborers (The Alaska areas north of N63 latitude and east of W138 longitude) *See per diem note on last page							
						L&M	**LEG**	
N2201	Group I, including:	39.60	9.55	21.16	1.65	0.30	0.20	72.46
	Nipper Storm Water Pollution Protection Plan Worker (SWPPP Worker - erosion and sediment control Laborer) Topman & Bull Gang Tunnel Track Laborer							
						L&M	**LEG**	
N2202	Group II, including:	40.70	9.55	21.16	1.65	0.30	0.20	73.56
	Burning & Cutting Torch Certified Erosion Sediment Control Lead (CESCL Laborer) Concrete Laborer Floor Preparation, Core Drilling Jackhammer/Chipping Gun or Pavement Breaker Laser Instrument Operator Nozzlemen, Pumpcrete or Shotcrete Pipelayer Helper							
						L&M	**LEG**	
N2203	Group III, including:	41.69	9.55	21.16	1.65	0.30	0.20	74.55
	Miner Retimberman							
						L&M	**LEG**	
N2204	Group IIIA, including:	45.96	9.55	21.16	1.65	0.30	0.20	78.82
	Asphalt Raker, Asphalt Belly Dump Lay Down Drill Doctor (in the field) Driller (including, but not limited to wagon drills, air-track drills, hydraulic drills) Pioneer Drilling & Drilling Off Tugger (all type drills) Pipelayer Powderman (Employee Possessor) Storm Water Pollution Protection Plan Specialist (SWPPP Specialist) Traffic Control Supervisor, DOT Qualified							
						L&M	**LEG**	
N2206	Group IIIB, including:	52.10	5.50	21.16	1.65	0.30	0.20	80.91
	Driller (including, but not limited to wagon drills, air-track drills, hydraulic drills)(over 5,000 hours) Federal Powderman (Responsible Person in Charge) Grade Checking (setting or transferring of grade marks, line and grade, GPS, drones) Pioneer Drilling & Drilling Off Tugger (all type drills)(over 5,000 hours) Stake Hopper							

Wage benefits key: BHR=basic hourly rate; H&W=health and welfare; IAF=industry advancement fund; LEG=legal fund; L&M=labor/management fund; PEN=pension fund; SAF=safety; SUI=supplemental unemployment insurance; S&L=SUI & LEG combined; TRN=training; THR=total hourly rate; VAC=vacation

Class Code	Classification of Laborers & Mechanics	BHR	H&W	PEN	TRN	Other Benefits		THR
	Tunnel Workers, Laborers (The area that is south of N63 latitude and west of W138 longitude) *See per diem note on last page							
						L&M	**LEG**	
S2201	Group I, including:	39.60	9.55	21.16	1.65	0.30	0.20	72.46
	Brakeman Mucker Nipper Storm Water Pollution Protection Plan Worker (SWPPP Worker - erosion and sediment control Laborer) Topman & Bull Gang Tunnel Track Laborer							
						L&M	**LEG**	
S2202	Group II, including:	40.70	9.55	21.16	1.65	0.30	0.20	73.56
	Burning & Cutting Torch Certified Erosion Sediment Control Lead (CESCL Laborer) Concrete Laborer Floor Preparation, Core Drilling Jackhammer/Chipping Gun or Pavement Breaker Laser Instrument Operator Nozzlemen, Pumpcrete or Shotcrete Pipelayer Helper							
						L&M	**LEG**	
S2203	Group III, including:	41.69	9.55	21.16	1.65	0.30	0.20	74.55
	Miner Retimberman							
						L&M	**LEG**	
S2204	Group IIIA, including:	45.96	9.55	21.16	1.65	0.30	0.20	78.82
	Asphalt Raker, Asphalt Belly Dump Lay Down Drill Doctor (in the field) Driller (including, but not limited to wagon drills, air-track drills, hydraulic drills) Pioneer Drilling & Drilling Off Tugger (all type drills) Pipelayer Powderman (Employee Possessor) Storm Water Pollution Protection Plan Specialist (SWPPP Specialist) Traffic Control Supervisor, DOT Qualified							
						L&M	**LEG**	
S2206	Group IIIB, including:	52.10	5.50	21.16	1.65	0.30	0.20	80.91
	Driller (including, but not limited to wagon drills, air-track drills, hydraulic drills)(over 5,000 hours) Federal Powderman (Responsible Person in Charge) Grade Checking (setting or transferring of grade marks, line and grade, GPS, drones) Pioneer Drilling & Drilling Off Tugger (all type drills)(over 5,000 hours)							

Wage benefits key: BHR=basic hourly rate; H&W=health and welfare; IAF=industry advancement fund; LEG=legal fund; L&M=labor/management fund; PEN=pension fund; SAF=safety; SUI=supplemental unemployment insurance; S&L=SUI & LEG combined; TRN=training; THR=total hourly rate; VAC=vacation

Class Code	Classification of Laborers & Mechanics	BHR	H&W	PEN	TRN	Other Benefits		THR
Tunnel Workers, Laborers (The area that is south of N63 latitude and west of W138 longitude) *See per diem note on last page								
						L&M	LEG	
S2206	Group IIIB, including:	52.10	5.50	21.16	1.65	0.30	0.20	80.91
	Stake Hopper							
Tunnel Workers, Power Equipment Operators *See per diem note on last page								
						L&M		
A2207	Group I	52.51	11.40	14.75	1.00	0.10	0.05	79.81
						L&M		
A2208	Group IA	54.60	11.40	14.75	1.00	0.10	0.05	81.90
						L&M		
A2209	Group II	51.60	11.40	14.75	1.00	0.10	0.05	78.90
						L&M		
A2210	Group III	50.74	11.40	14.75	1.00	0.10	0.05	78.04
						L&M		
A2211	Group IV	43.36	11.40	14.75	1.00	0.10	0.05	70.66

*** Per diem is an established practice for this classification. This means that per diem is an allowable alternative to board and lodging if all criteria are met. See 8 AAC 30.051-08 AAC 30.056, and the per diem information on page vii of this Pamphlet.**

**** Work in combination of classifications: Employees working in any combination of classifications within the diving crew (working diver, standby diver, and tender) in a shift are paid in the classification with the highest rate for a minimum of 8 hours per shift.**

Wage benefits key: BHR=basic hourly rate; H&W=health and welfare; IAF=industry advancement fund; LEG=legal fund; L&M=labor/management fund; PEN=pension fund; SAF=safety; SUI=supplemental unemployment insurance; S&L=SUI & LEG combined; TRN=training; THR=total hourly rate; VAC=vacation

Shipyard Rates Addendum

This Addendum was developed to address the specialized industry of shipbuilding/repair in Alaska, as it relates to public works. For the purposes of providing rates for shipyard work the Department is adopting Shipyard rates from the state of Washington (King County). These rates only apply to work done in shipbuilding/repair in Alaska, under a public contract. This addendum will be updated two times a year to coincide with the corresponding Issue of *Laborers and Mechanics MINIMUM RATES OF PAY.*

Class Code		BHR H&W PEN TRN Other Benefits THR
Shipyard Workers *See total hourly(THR) note below		
A2300	Ship Building/Repair Boilermaker	50.35
A2305	Ship Building/Repair Carpenter	50.95
A2310	Ship Building/Repair Crane Operator	45.06
A2315	Ship Building/Repair Electrician	50.42
A2320	Ship Building/Repair Heat & Frost Insulator	84.58
A2325	Ship Building/Repair Laborer	50.95
A2330	Ship Building/Repair Mechanist	50.95
A2335	Ship Building/Repair Operating Engineer	45.06
A2340	Ship Building/Repair Painter	50.95
A2345	Ship Building/Repair Pipefitter	50.95
A2350	Ship Building/Repair Rigger	50.35
A2355	Ship Building/Repair Sheet Metal	50.35
A2360	Ship Building/Repair Shipwright	50.95
A2365	Ship Building/Repair Warehouse	45.06

***The THR includes the base hourly rate (BHR) and fringe benefits. Employers must pay a BHR and fringe benefit package that adds up to the THR. Fringe benefits included in the THR can be paid to employees in three ways; paid into a union trust fund, into an approved benefit plan, or paid directly on the paycheck as gross wage**s.

Wage benefits key: BHR=basic hourly rate; H&W=health and welfare; IAF=industry advancement fund; LEG=legal fund; L&M=labor/management fund; PEN=pension fund; SAF=safety; SUI=supplemental unemployment insurance; S&L=SUI & LEG combined; TRN=training; THR=total hourly rate; VAC=vacation

"General Decision Number: AK20230001 05/19/2023

Superseded General Decision Number: AK20220001

State: Alaska

Construction Types: Building and Heavy

Counties: Alaska Statewide.

BUILDING AND HEAVY CONSTRUCTION PROJECTS (does not include residential construction consisting of single family homes and apartments up to and including 4 stories)

Note: Contracts subject to the Davis-Bacon Act are generally required to pay at least the applicable minimum wage rate required under Executive Order 14026 or Executive Order 13658. Please note that these Executive Orders apply to covered contracts entered into by the federal government that are subject to the Davis-Bacon Act itself, but do not apply to contracts subject only to the Davis-Bacon Related Acts, including those set forth at 29 CFR 5.1(a)(2)-(60).

If the contract is entered into on or after January 30, 2022, or the contract is renewed or extended (e.g., an option is exercised) on or after January 30, 2022:	. Executive Order 14026 generally applies to the contract. . The contractor must pay all covered workers at least $16.20 per hour (or the applicable wage rate listed on this wage determination, if it is higher) for all hours spent performing on the contract in 2023.
If the contract was awarded on or between January 1, 2015 and January 29, 2022, and the contract is not renewed or extended on or after January 30, 2022:	. Executive Order 13658 generally applies to the contract. . The contractor must pay all covered workers at least $12.15 per hour (or the applicable wage rate listed on this wage determination, if it is higher) for all hours spent performing on that contract in 2023.

The applicable Executive Order minimum wage rate will be adjusted annually. If this contract is covered by one of the Executive Orders and a classification considered necessary for performance of work on the contract does not appear on this wage determination, the contractor must still submit a conformance request.

Additional information on contractor requirements and worker protections under the Executive Orders is available at http://www.dol.gov/whd/govcontracts.

Modification Number	Publication Date
0	01/06/2023
1	01/13/2023
2	01/27/2023
3	04/14/2023
4	05/05/2023
5	05/19/2023

ASBE0097-001 06/01/2021

	Rates	Fringes
Asbestos Workers/Insulator (includes application of all insulating materials protective coverings, coatings and finishings to all types of mechanical systems)	$ 38.68	21.57
HAZARDOUS MATERIAL HANDLER (includes preparation, wetting, stripping, removal scrapping, vacuming, bagging, and disposing of all insulation materials, whether they contain asbestos or not, from mechanical systems)	$ 37.38	19.55

BOIL0502-002 01/01/2021

	Rates	Fringes
BOILERMAKER	$ 47.03	30.59

BRAK0001-002 07/01/2020

	Rates	Fringes
Bricklayer, Blocklayer, Stonemason, Marble Mason, Tile Setter, Terrazzo Worker	$ 42.16	19.67
Tile & Terrazzo Finisher	$ 35.99	19.67

CARP1281-001 09/01/2022

	Rates	Fringes
CARPENTER Including Lather and Drywall Hanging	$ 43.34	28.86

CARP1281-002 09/01/2022

	Rates	Fringes
MILLWRIGHT	$ 46.48	24.32

CARP2520-003 09/01/2022

	Rates	Fringes

```
Diver
     Stand-by.....................$ 47.65            28.32
     Tender.......................$ 46.65            28.32
     Working......................$ 87.45            28.32
Piledriver
     Piledriver; Skiff Operator
     and Rigger...................$ 38.34            26.51
     Sheet Stabber................$ 38.34            26.51
     Welder.......................$ 43.90            26.51

DEPTH PAY PREMIUM FOR DIVERS BELOW WATER SURFACE:
50-100 feet                 $1.00 per foot
101 feet and deeper         $2.00 per foot

ENCLOSURE PAY PREMIUM WITH NO VERTICAL ASCENT:
5-50 FEET                   $1.00 PER FOOT/DAY
51-100 FEET                 $2.00 PER FOOT/DAY
101 FEET AND ABOVE          $3.00 PER FOOT/DAY

SATURATION DIVING:
  The standby rate applies until saturation starts. The
  saturation diving rate applies when divers are under
  pressure continuously until work task and decompression are
  complete. the diver rate shall be paid for all saturation
  hours.

WORK IN COMBINATION OF CLASSIFICATIONS:
  Employees working in any combination of classifications
  within the diving crew (except dive supervisor) in a shift
  are paid in the classification with the highest rate for
  that shift.

----------------------------------------------------------------
 ELEC1547-004 04/01/2023

                                  Rates          Fringes

CABLE SPLICER.....................$ 44.44         3%+28.39
ELECTRICIAN.......................$ 44.44         3%+28.39
----------------------------------------------------------------
 ELEC1547-005 04/01/2023

Line Construction

                                  Rates          Fringes

CABLE SPLICER.....................$ 63.44         3%+31.90
Linemen (Including Equipment
Operators, Technician)............$ 61.29         3%+30.98
Powderman.........................$ 61.44         3%+32.69
TREE TRIMMER......................$ 40.71        3 5+28.05
----------------------------------------------------------------
 ELEV0019-002 01/01/2023

                                  Rates          Fringes

ELEVATOR MECHANIC................$ 65.83       37.335+a+b

FOOTNOTE: a.  Employer contributes 8% of the basic hourly rate
    for over 5 year's service and 6% of the basic
    hourly rate for 6 months to 5 years' of service
    as vacation paid credit.   b. Eight paid holidays:
```

New Year's Day; Memorial Day; Independence Day; Labor Day; Veteran's Day; Thanksgiving Day; Friday after Thanksgiving, and Christmas Day

---

* ENGI0302-002 04/01/2023

	Rates	Fringes
POWER EQUIPMENT OPERATOR		
GROUP 1	$ 47.74	27.20
GROUP 1A	$ 49.64	27.20
GROUP 2	$ 46.91	27.20
GROUP 3	$ 46.13	27.20
GROUP 4	$ 39.42	27.20
TUNNEL WORK		
GROUP 1	$ 52.51	27.20
GROUP 1A	$ 54.60	27.20
GROUP 2	$ 51.60	27.20
GROUP 3	$ 50.74	27.20
GROUP 4	$ 43.36	27.20

POWER EQUIPMENT OPERATOR CLASSIFICATIONS

GROUP 1: Asphalt Roller: Breakdown, Intermediate, and Finish; Back Filler; Barrier Machine (Zipper); Beltcrete with power pack and similar conveyors; Bending Machine; Boat Coxwains; Bulldozers; Cableways, Highlines and Cablecars; Cleaning Machine; Coating Machine; Concrete Hydro Blaster; Cranes-45 tons and under or 150 foot boom and under (including jib and attachments): (a) Hydralifts or Transporters, all track or truck type,(b) Derricks; Crushers; Deck Winches-Double Drum; Ditching or Trenching Machine (16 inch or over); Drilling Machines, core, cable, rotary and exploration; Finishing Machine Operator, Concrete Paving, Laser Screed, Sidewalk, Curb and Gutter Machine; Helicopters; Hover Craft, Flex Craft, Loadmaster, Air Cushion, All Terrain Vehicle, Rollagon, Bargecable, Nodwell, and Snow Cat; Hydro Ax: Feller Buncher and similar; Loaders (2 1/2 yards through 5 yards, including all attachments): Forklifts with telescopic boom and swing attachment, Overhead and front end, 2 1/2 yards through 5 yards, Loaders with forks or pipe clamps; Loaders, elevating belt type, Euclid and similar types; Mechanics, Bodyman; Micro Tunneling Machine; Mixers: Mobile type w/hoist combination; Motor Patrol Grader; Mucking Machines: Mole, Tunnel Drill, Horizontal/Directional Drill Operator, and/or Shield; Operator on Dredges; Piledriver Engineers, L. B. Foster, Puller or similar Paving Breaker; Power Plant, Turbine Operator, 200 k.w. and over (power plants or combination of power units over 300 k.w.); Scrapers-through 40 yards; Service Oiler/Service Engineer; Sidebooms-under 45 tons; Shot Blast Machine; Shovels, Backhoes, Excavators with all attachments, and Gradealls (3 yards and under), Spreaders, Blaw Knox, Cedarapids, Barber Greene, Slurry Machine; Sub-grader (Gurries, Reclaimer, and similar types); Tack tractor; Truck mounted Concrete Pumps, Conveyor, Creter; Water Kote Machine; Unlicensed off road hauler

GROUP 1A: Camera/Tool/Video Operator (Slipline), Cranes-over 45 tons or 150 foot (including jib and

attachments): (a) Clamshells and Draglines (over 3 yards), (b) Tower cranes; Licensed Water/Waste Water Treatment Operator; Loaders over 5 yds.; Certified Welder, Electrical Mechanic, Camp Maintenance Engineer, Mechanic (over 10,000 hours); Motor Patrol Grader, Dozer, Grade Tractor, Roto-mill/Profiler (finish: when finishing to final grade and/or to hubs, or for asphalt); Power Plants: 1000 k.w. and over; Quad; Screed; Shovels, Backhoes, Excavators with all attachments (over 3 yards), Sidebooms over 45 tons; Slip Form Paver, C.M.I. and similar types; Scrapers over 40 yards;

GROUP 2: Boiler-fireman; Cement Hog and Concrete Pump Operator; Conveyors (except as listed in group 1); Hoist on steel erection; Towermobiles and Air Tuggers; Horizontal/Directional Drill Locator;Licensed Grade Technician; Loaders, (i.e., Elevating Grader and Material Transfer Vehicle); Locomotives: rod and geared engines; Mixers; Screening, Washing Plant; Sideboom (cradling rock drill regardless of size); Skidder; Trencing Machine under 16 inches; Waste/ Waste Water Treatment Operator.

GROUP 3: ""A"" Frame Trucks, Deck Winches: single power drum; Bombardier (tack or tow rig); Boring Machine; Brooms-power; Bump Cutter; Compressor; Farm tractor; Forklift, industrial type; Gin Truck or Winch Truck with poles when used for hoisting; Grade Checker and Stake Hopper; Hoist, Air Tuggers, Elevators; Loaders: (a) Elevating-Athey, Barber Green and similar types (b) Forklifts or Lumber Carrier (on construction job site) (c) Forklifts with Tower (d) Overhead and Front-end, under 2 1/2 yds. Locomotives:Dinkey (air, steam, gas and electric) Speeders; Mechanics (light duty); Oil, Blower Distribution; Post Hole Diggers, mechanical; Pot Fireman (power agitated); Power Plant, Turbine Operator, under 200 k.w.; Pumps-water; Roller-other than Plantmix; Saws, concrete; Skid Steer with all attachments; Straightening Machine; Tow Tractor

GROUP 4: Rig Oiler/Crane Assistant Engineer;Parts and Equipment Coordinator; Swamper (on trenching machines or shovel type equipment); Spotter; Steam Cleaner; Drill Helper.

FOOTNOTE: Groups 1-4 receive 10% premium while performing tunnel or underground work. Rig Oiler/Crane Assistant Engineer shall be required on cranes over 85 tons or over 100 feet of boom.

---

* IRON0751-003 07/01/2022

	Rates	Fringes
IRONWORKER		
BENDER OPERATOR.....	$ 41.49	34.86
BRIDGE, STRUCTURAL, ORNAMENTAL, REINFORCING MACHINERY MOVER, RIGGER, SHEETER, STAGE RIGGER, BENDER OPERATOR.....	$ 41.49	34.86
FENCE, BARRIER INSTALLER....	$ 37.99	34.86
GUARDRAIL INSTALLERS.....	$ 38.99	34.86

GUARDRAIL LAYOUT MAN	$ 38.72	34.86
HELICOPTER, TOWER	$ 42.49	34.86

LABO0341-001 04/01/2023

	Rates	Fringes
LABORER (South of the 63rd Parallel & West of Longitude 138 Degrees)		
GROUP 1	$ 36.00	32.56
GROUP 2	$ 37.00	32.56
GROUP 3	$ 37.90	32.56
GROUP 3A	$ 41.78	32.56
GROUP 3B	$ 47.36	28.51
GROUP 4	$ 25.57	32.56
TUNNELS, SHAFTS, AND RAISES		
GROUP 1	$ 39.60	32.56
GROUP 2	$ 40.70	32.56
GROUP 3	$ 41.69	32.56
GROUP 3A	$ 45.96	32.56
GROUP 3B	$ 52.10	28.51

LABORERS CLASSIFICATIONS

GROUP 1: Asphalt Workers (shovelman, plant crew); Brush Cutters; Camp Maintenance Laborer; Carpenter Tenders; Choke Setters, Hook Tender, Rigger, Signalman; Concrete Laborer(curb and gutter, chute handler, grouting, curing, screeding); Crusher Plant Laborer; Demolition Laborer; Ditch Diggers; Dump Man; Environmental Laborer (asbestos (limited to nonmechanical systems), hazardous and toxic waste, oil spill); Fence Installer; Fire Watch Laborer; Flagman; Form Strippers; General Laborer; Guardrail Laborer, Bridge Rail Installers; Hydro-Seeder Nozzleman; Laborers (building); Landscape or Planter; Laying of Decorative Block (retaining walls, flowered decorative block 4 feet and below); Material Handlers; Pneumatic or Power Tools; Portable or Chemical Toilet Serviceman; Pump Man or Mixer Man; Railroad Track Laborer; Sandblast, Pot Tender; Saw Tenders; Scaffold Building and Erecting; Slurry Work; Stake Hopper; Steam Point or Water Jet Operator; Steam Cleaner Operator; Tank Cleaning; Utiliwalk, Utilidor Laborer and Conduit Installer; Watchman (construction projects); Window Cleaner

GROUP 2: Burning and Cutting Torch; Cement or Lime Dumper or Handler (sack or bulk); Choker Splicer; Chucktender (wagon, airtrack and hydraulic drills); Concrete Laborers (power buggy, concrete saws, pumpcrete nozzleman, vibratorman); Culvert Pipe Laborer; Cured in place Pipelayer; Environmental Laborer (marine work, oil spill skimmer operator, small boat operator); Foam Gun or Foam Machine Operator; Green Cutter (dam work); Gunnite Operator; Hod Carriers; Jackhammer or Pavement Breakers (more than 45 pounds);Laying of Decorative Block (retaining walls, flowered decorative block above 4 feet); Mason Tender and Mud Mixer (sewer work); Pilot Car; Plasterer, Bricklayer and Cement Finisher Tenders; Power Saw Operator; Railroad Switch Layout Laborer; Sandblaster; Sewer Caulkers; Sewer Plant Maintenance Man; Thermal Plastic Applicator; Timber Faller, chain saw operator, filer; Timberman

GROUP 3: Alarm Installer; Bit Grinder; Guardrail Machine Operator; High Rigger and tree topper; High Scaler; Multiplate; Slurry Seal Squeegee Man

GROUP 3A: Asphalt Raker, Asphalt Belly dump lay down; Drill Doctor (in the field); Drillers (including, but not limited to, wagon drills, air track drills; hydraulic drills); Powderman; Pioneer Drilling and Drilling Off Tugger (all type drills); Pipelayers

GROUP 3B: Grade checker (setting or transfering of grade marks, line and grade)

GROUP 4: Final Building Cleanup

TUNNELS, SHAFTS, AND RAISES CLASSIFICATIONS

GROUP 1: Brakeman; Muckers; Nippers; Topman and Bull Gang; Tunnel Track Laborer

GROUP 2: Burning and Cutting Torch; Concrete Laborers; Jackhammers; Nozzleman, Pumpcrete or Shotcrete.

GROUP 3: Miner; Retimberman

GROUP 3A: Asphalt Raker, Asphalt Belly dump lay down; Drill Doctor (in the field); Drillers (including, but not limited to, wagon drills, air track drills; hydraulic drills); Powderman; Pioneer Drilling and Drilling Off Tugger (all type drills); Pipelayers.

GROUP 3B: Grade checker (setting or transfering of grade marks, line and grade)

Tunnel shaft and raise rates only apply to workers regularly employed inside a tunnel portal or shaft collar.

LABO0942-001 04/01/2023

	Rates	Fringes
Laborers: North of the 63rd Parallel & East of Longitude 138 Degrees		
GROUP 1	$ 36.00	32.56
GROUP 2	$ 37.00	32.56
GROUP 3	$ 37.90	32.56
GROUP 3A	$ 41.78	32.56
GROUP 3B	$ 47.36	28.51
GROUP 4	$ 25.57	32.56
TUNNELS, SHAFTS, AND RAISES		
GROUP 1	$ 39.60	32.56
GROUP 2	$ 40.70	32.56
GROUP 3	$ 41.69	32.56
GROUP 3A	$ 45.96	32.56
GROUP 3B	$ 52.10	32.56

LABORERS CLASSIFICATIONS

GROUP 1: Asphalt Workers (shovelman, plant crew); Brush

Cutters; Camp Maintenance Laborer; Carpenter Tenders; Choke Setters, Hook Tender, Rigger, Signalman; Concrete Laborer(curb and gutter, chute handler, grouting, curing, screeding); Crusher Plant Laborer; Demolition Laborer; Ditch Diggers; Dump Man; Environmental Laborer (asbestos (limited to nonmechanical systems), hazardous and toxic waste, oil spill); Fence Installer; Fire Watch Laborer; Flagman; Form Strippers; General Laborer; Guardrail Laborer, Bridge Rail Installers; Hydro-Seeder Nozzleman; Laborers (building); Landscape or Planter; Laying of Decorative Block (retaining walls, flowered decorative block 4 feet and below); Material Handlers; Pneumatic or Power Tools; Portable or Chemical Toilet Serviceman; Pump Man or Mixer Man; Railroad Track Laborer; Sandblast, Pot Tender; Saw Tenders; Scaffold Building and Erecting; Slurry Work; Stake Hopper; Steam Point or Water Jet Operator; Steam Cleaner Operator; Tank Cleaning; Utiliwalk, Utilidor Laborer and Conduit Installer; Watchman (construction projects); Window Cleaner

GROUP 2: Burning and Cutting Torch; Cement or Lime Dumper or Handler (sack or bulk); Choker Splicer; Chucktender (wagon, airtrack and hydraulic drills); Concrete Laborers (power buggy, concrete saws, pumpcrete nozzleman, vibratorman); Culvert Pipe Laborer; Cured in place Pipelayer; Environmental Laborer (marine work, oil spill skimmer operator, small boat operator); Foam Gun or Foam Machine Operator; Green Cutter (dam work); Gunnite Operator; Hod Carriers; Jackhammer or Pavement Breakers (more than 45 pounds);Laying of Decorative Block (retaining walls, flowered decorative block above 4 feet); Mason Tender and Mud Mixer (sewer work); Pilot Car; Plasterer, Bricklayer and Cement Finisher Tenders; Power Saw Operator; Railroad Switch Layout Laborer; Sandblaster; Sewer Caulkers; Sewer Plant Maintenance Man; Thermal Plastic Applicator; Timber Faller, chain saw operator, filer; Timberman

GROUP 3: Alarm Installer; Bit Grinder; Guardrail Machine Operator; High Rigger and tree topper; High Scaler; Multiplate; Slurry Seal Squeegee Man

GROUP 3A: Asphalt Raker, Asphalt Belly dump lay down; Drill Doctor (in the field); Drillers (including, but not limited to, wagon drills, air track drills; hydraulic drills); Powderman; Pioneer Drilling and Drilling Off Tugger (all type drills); Pipelayers

GROUP 3B: Grade checker (setting or transfering of grade marks, line and grade)

GROUP 4: Final Building Cleanup

TUNNELS, SHAFTS, AND RAISES CLASSIFICATIONS

GROUP 1: Brakeman; Muckers; Nippers; Topman and Bull Gang; Tunnel Track Laborer

GROUP 2: Burning and Cutting Torch; Concrete Laborers; Jackhammers; Nozzleman, Pumpcrete or Shotcrete.

GROUP 3: Miner; Retimberman

GROUP 3A: Asphalt Raker, Asphalt Belly dump lay down; Drill Doctor (in the field); Drillers (including, but not limited to, wagon drills, air track drills; hydraulic drills); Powderman; Pioneer Drilling and Drilling Off Tugger (all type drills); Pipelayers.

GROUP 3B: Grade checker (setting or transfering of grade marks, line and grade)

Tunnel shaft and raise rates only apply to workers regularly employed inside a tunnel portal or shaft collar.

PAIN1959-001 07/01/2022

NORTH OF THE 63RD PARALLEL

	Rates	Fringes
PAINTER		
BRUSH/ROLLER PAINT OR WALL COVERER	$ 36.08	25.45
TAPING, TEXTURING, STRUCTURAL PAINTING, SANDBLASTING, POT TENDER, FINISH METAL, SPRAY, BUFFER OPERATOR, RADON MITIGATION, LEAD BASED PAINT ABATEMENT, HAZARDOUS MATERIAL HANDLER	$ 36.60	25.45

PAIN1959-002 12/01/2021

SOUTH OF THE 63RD PARALLEL

	Rates	Fringes
PAINTER		
General Painter	$ 32.64	25.95
Industrial Painter	$ 32.74	25.95
Taper / Paper & Vinyl Hanger	$ 32.64	25.95

PAIN1959-003 12/01/2021

NORTH OF THE 63RD PARALLEL

	Rates	Fringes
GLAZIER	$ 41.16	28.16

PAIN1959-004 07/01/2019

	Rates	Fringes
FLOOR LAYER: Carpet	$ 28.75	14.44

PAIN1959-006 12/01/2021

SOUTH OF THE 63RD PARALLEL

	Rates	Fringes

GLAZIER.....$ 41.37 27.25

PLUM0262-002 01/01/2023

East of the 141st Meridian

	Rates	Fringes
Plumber; Steamfitter.....	$ 41.50	27.62

PLUM0367-002 07/01/2021

South of the 63rd Parallel

	Rates	Fringes
Plumber; Steamfitter.....	$ 41.00	27.95

PLUM0375-002 07/01/2021

North of the 63rd Parallel

	Rates	Fringes
Plumber; Steamfitter.....	$ 42.91	31.25

PLUM0669-002 04/01/2023

	Rates	Fringes
SPRINKLER FITTER.....	$ 54.01	30.22

ROOF0189-006 04/01/2023

	Rates	Fringes
ROOFER.....	$ 47.62	18.53

SHEE0023-003 08/01/2022

South of the 63rd Parallel

	Rates	Fringes
SHEET METAL WORKER.....	$ 45.35	29.19

SHEE0023-004 07/01/2022

North of the 63rd Parallel

	Rates	Fringes
SHEET METAL WORKER.....	$ 50.83	29.03

TEAM0959-003 04/01/2023

	Rates	Fringes
TRUCK DRIVER		
GROUP 1.....	$ 46.84	24.33
GROUP 1A.....	$ 48.19	24.33

GROUP 2	$ 45.51	24.33
GROUP 3	$ 44.64	24.33
GROUP 4	$ 44.02	24.33
GROUP 5	$ 43.22	24.33

GROUP 1: Semi with Double Box Mixer; Dump Trucks (including rockbuggy and trucks with pups) over 40 yards up to and including 60 yards; Deltas, Commanders, Rollogans and similar equipment when pulling sleds, trailers or similar equipment; Boat Coxswain; Lowboys including attached trailers and jeeps, up to and including 12 axles; Ready-mix over 12 yards up to and including 15 yards); Water Wagon (250 Bbls and above); Tireman, Heavy Duty/Fueler

GROUP 1A: Dump Trucks (including Rockbuggy and Trucks with pups) over 60 yards up to and including 100 yards; Jeeps (driver under load)

GROUP 2: Turn-O-Wagon or DW-10 not self-loading; All Deltas, Commanders, Rollogans, and similar equipment; Mechanics; Dump Trucks (including Rockbuggy and Trucks with pups) over 20 yards up to and including 40 yards; Lowboys including attached trailers and jeeps up to and including 8 axles; Super vac truck/cacasco truck/heat stress truck; Ready-mix over 7 yards up to and including 12 yards; Partsman; Stringing Truck

GROUP 3: Dump Trucks (including Rockbuggy and Trucks with pups) over 10 yards up to and including 20 yards; batch trucks 8 yards and up; Oil distributor drivers; Oil Distributor Drivers; Trucks/Jeeps (push or pull); Traffic Control Technician

GROUP 4: Buggymobile; Semi or Truck and trailer; Dumpster; Tireman (light duty); Dump Trucks (including Rockbuggy and Truck with pups) up to and including 10 yards; Track Truck Equipment; Grease Truck; Flat Beds, dual rear axle; Hyster Operators (handling bulk aggregate); Lumber Carrier; Water Wagon, semi; Water Truck, dual axle; Gin Pole Truck, Winch Truck, Wrecker, Truck Mounted ""A"" Frame manufactured rating over 5 tons; Bull Lifts and Fork Lifts with Power Boom and Swing attachments, over 5 tons; Front End Loader with Forks; Bus Operator over 30 passengers; All Terrain Vehicles; Boom Truck/Knuckle Truck over 5 tons; Foam Distributor Truck/dual axle; Hydro-seeders, dual axle; Vacuum Trucks, Truck Vacuum Sweepers; Loadmaster (air and water); Air Cushion or similar type vehicle; Fire Truck/Ambulance Driver; Combination Truck-fuel and grease; Compactor (when pulled by rubber tired equipment); Rigger (air/water/oilfield); Ready Mix, up to and including 7 yards;

GROUP 5: Gravel Spreader Box Operator on Truck; Flat Beds, single rear axle; Boom Truck/Knuckle Truck up to and including 5 tons; Pickups (Pilot Cars and all light duty vehicles); Water Wagon (Below 250 Bbls); Gin Pole Truck, Winch Truck, Wrecker, Truck Mounted ""A"" Frame, manufactured rating 5 tons and under; Bull Lifts and Fork Lifts (fork lifts with power broom and swing attachments up to and including 5 tons); Buffer Truck; Tack Truck; Farm type Rubber Tired Tractor (when material handling or pulling wagons on a construction project); Foam Distributor, single

axle; Hydro-Seeders, single axle; Team Drivers (horses, mules and similar equipment); Fuel Handler (station/bulk attendant); Batch Truck, up to and including 7 yards; Gear/Supply Truck; Bus Operator, Up to 30 Passengers; Rigger/Swamper

---

WELDERS - Receive rate prescribed for craft performing operation to which welding is incidental.

==========

Note: Executive Order (EO) 13706, Establishing Paid Sick Leave for Federal Contractors applies to all contracts subject to the Davis-Bacon Act for which the contract is awarded (and any solicitation was issued) on or after January 1, 2017. If this contract is covered by the EO, the contractor must provide employees with 1 hour of paid sick leave for every 30 hours they work, up to 56 hours of paid sick leave each year. Employees must be permitted to use paid sick leave for their own illness, injury or other health-related needs, including preventive care; to assist a family member (or person who is like family to the employee) who is ill, injured, or has other health-related needs, including preventive care; or for reasons resulting from, or to assist a family member (or person who is like family to the employee) who is a victim of, domestic violence, sexual assault, or stalking. Additional information on contractor requirements and worker protections under the EO is available at https://www.dol.gov/agencies/whd/government-contracts.

Unlisted classifications needed for work not included within the scope of the classifications listed may be added after award only as provided in the labor standards contract clauses (29CFR 5.5 (a) (1) (ii)).

The body of each wage determination lists the classification and wage rates that have been found to be prevailing for the cited type(s) of construction in the area covered by the wage determination. The classifications are listed in alphabetical order of ""identifiers"" that indicate whether the particular rate is a union rate (current union negotiated rate for local), a survey rate (weighted average rate) or a union average rate (weighted union average rate).

Union Rate Identifiers

A four letter classification abbreviation identifier enclosed in dotted lines beginning with characters other than ""SU"" or ""UAVG"" denotes that the union classification and rate were prevailing for that classification in the survey. Example: PLUM0198-005 07/01/2014. PLUM is an abbreviation identifier of the union which prevailed in the survey for this classification, which in this example would be Plumbers. 0198 indicates the local union number or district council number where applicable, i.e., Plumbers Local 0198. The next number, 005 in the example, is an internal number used in processing

the wage determination. 07/01/2014 is the effective date of the most current negotiated rate, which in this example is July 1, 2014.

Union prevailing wage rates are updated to reflect all rate changes in the collective bargaining agreement (CBA) governing this classification and rate.

Survey Rate Identifiers

Classifications listed under the ""SU"" identifier indicate that no one rate prevailed for this classification in the survey and the published rate is derived by computing a weighted average rate based on all the rates reported in the survey for that classification. As this weighted average rate includes all rates reported in the survey, it may include both union and non-union rates. Example: SULA2012-007 5/13/2014. SU indicates the rates are survey rates based on a weighted average calculation of rates and are not majority rates. LA indicates the State of Louisiana. 2012 is the year of survey on which these classifications and rates are based. The next number, 007 in the example, is an internal number used in producing the wage determination. 5/13/2014 indicates the survey completion date for the classifications and rates under that identifier.

Survey wage rates are not updated and remain in effect until a new survey is conducted.

Union Average Rate Identifiers

Classification(s) listed under the UAVG identifier indicate that no single majority rate prevailed for those classifications; however, 100% of the data reported for the classifications was union data. EXAMPLE: UAVG-OH-0010 08/29/2014. UAVG indicates that the rate is a weighted union average rate. OH indicates the state. The next number, 0010 in the example, is an internal number used in producing the wage determination. 08/29/2014 indicates the survey completion date for the classifications and rates under that identifier.

A UAVG rate will be updated once a year, usually in January of each year, to reflect a weighted average of the current negotiated/CBA rate of the union locals from which the rate is based.

WAGE DETERMINATION APPEALS PROCESS

1.) Has there been an initial decision in the matter? This can be:

* an existing published wage determination
* a survey underlying a wage determination
* a Wage and Hour Division letter setting forth a position on a wage determination matter
* a conformance (additional classification and rate) ruling

On survey related matters, initial contact, including requests for summaries of surveys, should be with the Wage and Hour

National Office because National Office has responsibility for the Davis-Bacon survey program. If the response from this initial contact is not satisfactory, then the process described in 2.) and 3.) should be followed.

With regard to any other matter not yet ripe for the formal process described here, initial contact should be with the Branch of Construction Wage Determinations. Write to:

Branch of Construction Wage Determinations
Wage and Hour Division
U.S. Department of Labor
200 Constitution Avenue, N.W.
Washington, DC 20210

2.) If the answer to the question in 1.) is yes, then an interested party (those affected by the action) can request review and reconsideration from the Wage and Hour Administrator (See 29 CFR Part 1.8 and 29 CFR Part 7). Write to:

Wage and Hour Administrator
U.S. Department of Labor
200 Constitution Avenue, N.W.
Washington, DC 20210

The request should be accompanied by a full statement of the interested party's position and by any information (wage payment data, project description, area practice material, etc.) that the requestor considers relevant to the issue.

3.) If the decision of the Administrator is not favorable, an interested party may appeal directly to the Administrative Review Board (formerly the Wage Appeals Board). Write to:

Administrative Review Board
U.S. Department of Labor
200 Constitution Avenue, N.W.
Washington, DC 20210

4.) All decisions by the Administrative Review Board are final.

==========

END OF GENERAL DECISIO"

SECTION 01 00 00-SUMMARY OF WORK

PART 1 - SCOPE OF WORK

1.01 Project Information

A. Project Identification: City and Borough of Wrangell Water Treatment Plant

B. Owner: City and Borough of Wrangell

1. City's Representative: Amber Al-Haddad, P.O. Box 531, Wrangell, Alaska 99929

C. Engineer: DOWL, LLC

1. Project Engineer Representative: Chase Nelson, DOWL, 5015 Business Park, Suite 4000, Anchorage AK 99503. Phone Number: 907-562-2000.

1.02 General

The Project consists of modifications to the existing water treatment plant and construction of a new water treatment plant building. In general, modifications to the existing treatment plant include conversion of the slow sand filters into a chlorine contact chamber, upgrading the high service pumps, conversion of the roughing filters into a backwash equalization basin and installation of a waste line to the existing sanitary sewer system, demolition of an existing ozonation system, upgrades to the electrical and controls systems inside the existing controls building, and the installation of new on-site chlorine generation equipment in the existing controls building. The new water treatment plant building will house a pre-selected Multimedia and Dissolved Air Flotation Treatment System capable of treating 2.26 Million Gallons Per Day (MGD). The Contractor shall order, handle, unload, and install the DAF system from AWC. Various field piping connections are required to facilitate the installation of the new water treatment equipment located in the new building.

1.03 Contractor Use of Site and Premises

A. Restricted Use of Site: Contractor shall be provided access keys to the Wood Street gate, and keys to all existing treatment buildings. Contractor shall keep locked and secure all facilities during construction.

a. Driveways, walkways, and entrances to the buildings shall be kept clear and available to the City, City personnel and emergency vehicles at all times. Do not use these areas for parking or for storage of materials.

1.04 The Contractor shall communicate to the public any road closures, driveway closures or other traffic control impacts on the community.

PART 2 - PRE-CONSTRUCTION REQUIREMENTS

2.01 Photographs and videos will be taken showing details of existing conditions so that restoration is done properly after the project is complete.

2.02 Contractor shall attend a pre-construction kickoff meeting with the Owner and RPR.

PART 3 - EXTRA OR DISPUTED WORK REPORTS

3.01 If payment for work performed is to be based on time and materials, or if a claim is contemplated in which time and material reports would assist in settling the claim, the Contractor shall maintain adequate records on the Daily Report forms available from the

Engineer. The reported work shall have the Engineer's and/or Resident Project Representative's signature to indicate his concurrence prior to being submitted to the Engineer or Contract Administrator within 48 hours of the time the work was performed. Concurrence by the Resident Project Representative does not indicate agreement to or authorization of "extra work" or "extra payment" but rather indicates agreement that the work effort recorded during that time period was in fact done.

PART 4 - MATERIAL TESTING AND INSPECTION

4.01 Contractor's Obligation

A. The Contractor shall obtain and pay for all testing that may be necessary to qualify Contractor-furnished materials for use in the work. This shall include material quality tests, mix designs, equipment and plant calibration, and other similar tests required to qualify Contractor-furnished materials for compliance with the specifications. The Contractor shall submit test results to the Engineer sufficiently in advance of the work so that approval to proceed is received by the Contractor prior to using that material in the work.

B. Samples of material required for testing shall be furnished by the Contractor.

C. The Contractor is responsible for coordinating with the Resident Project Representative and requesting all testing, including field testing paid for by the Owner.

D. The Contractor shall pay for all failing field tests performed to monitor construction control of the materials used in the work.

E. Payment for failing field tests will be deducted from any amounts due or to become due to the Contractor.

F. Contractor to verify the Owner supplied items are not damage or deflective. Damage and deflective items shall not be used for this project.

4.02 Owner's Obligation

A. The Owner will be paying for a full-time Resident Project Representative during the construction.

PART 5 - WEATHER LIMITATIONS

The Contractor shall protect each increment of completed work against detrimental effects due to weather, by approved methods. Any increment of completed work that is damaged by freezing or rain, shall be reconditioned, reshaped, re-compacted, or replaced by the Contractor in conformance with the requirements of this specification without additional cost to the Owner.

PART 6 - NOTICE TO BE GIVEN

6.01 Contractor shall notify the Engineer's Resident Project Representative at least 72 hours prior to the following:

A. Disruptions in utility services.

B. Any Material or Quality Control Testing as indicated in the Specifications.

C. On-site coordination with property owners or tenants.

D. Needs for Traffic Control

6.02 LABOR STANDARDS, REPORTING, AND PREVAILING WAGE RATES DETERMINATIONS

The prevailing wage rates of the State of Alaska apply to this contract as do any requirements of the State of Alaska associated with the use of these State prevailing wages.

PART 7 - EXECUTION OF WORK

7.01 Survey Control

Benchmarks, monuments, and baselines shown on the Drawings, shall be used for horizontal and vertical control by the Contractor. Caution shall be used when working near these and other survey monuments so as not to disturb them.

7.02 Disturbing Existing Monuments and Property Corners

Should the Contractor's normal prosecution of work require that he disturb any property corners or survey monuments, he shall re-establish them after completion of the project and at no additional cost to the Owner. All referencing and re-establishment of property corners and survey monuments shall be performed by a Land Surveyor registered in the State of Alaska.

7.03 Construction Survey

All construction survey stakes will be placed by the Contractor, based on the reference points indicated in the Drawings.

PART 8 - AS-BUILTS

8.01 General

The Contractor shall provide the Owner as-built information on all construction. This information will include copies of the Contractor's field survey notes and a set of the Drawings red-lined with as-built information. Items to be as-built by the Contractor, include, but not are limited to, the water main alignments, culverts length and location, service line placements, service boxes, etc.

A. Control

Basis for horizontal control for as-built information shall be the system of stationing shown on the Drawings. All elevations shall be based on the datum used for design.

B. Survey Notes

All field survey notes shall include date, name of surveyor or foreman, and adequate description of TBM's when used. Sketches shall have north arrow and show relationship or ties to stationing control. All notes shall be reduced to show actual elevation at design datum.

END OF SECTION

SECTION 01 10 01 – CONSTRUCTION SEQUENCING PLAN

PART 1 - GENERAL

The following proposed construction sequencing plan is one method by which the new water treatment plant can be constructed while maintaining operability of the existing water treatment plant. Always having the existing water treatment plant fully operational during construction is a requirement of the project. At some point in the construction process, both water treatment plants will be fully operational, and the installation must allow the operators to easily switch between plants during commissioning and testing. The contractor may propose and execute an alternative sequence, pending Engineer, Owner, and Alaska Department of Environmental Conservation (DEC) approval.

PART 2 - PRE-CONSTRUCTION REQUIREMENTS

2.01 The Contractor shall establish and maintain survey benchmarks to ensure all elevations shown on the drawings can be maintained. Final grading elevations reference the project standard benchmark as shown on the survey drawings.

2.02 Thoroughly examine the construction site to facilitate planning the drilling and blasting required. Coordinate all blasting activities with Owner and Operators to minimize disruptions to the existing treatment plant operations.

2.03 A cellular tower operator also uses the entry road to the existing water treatment plant to access their equipment further up the road. Coordinate all road work to ensure access is available to other users located past the existing WTP. Road access shall also be made available to water department staff to access the two raw water reservoirs beyond the WTP.

PART 3 - CONSTRUCTION SEQUENCING

3.01 PHASE 1: Civil Site Preparation and New Yard Piping Tie-Ins.

A. Civil:

1. To prepare for construction of the new Water Treatment Plant (WTP) Building, the existing topography shall be cleared, grubbed, blasted, and graded per the plans and specifications. Access to the existing treatment plant shall be maintained at all times. Alternate access via the gate located at the northwest of the site can be utilized for this purpose if needed.
2. Note: significant rock blasting, crushing, and site grading work is required for this phase of the project. The contractor is encouraged to review site grading requirements with the Engineer to resolve questions prior to starting work. The site has been balanced as much as possible to minimize import/export of materials. On-site rock crushing may be required, and pipe bedding materials will need to be imported.

B. Process / Yard Piping:

1. During one or two scheduled shut-down(s) as required:
2. Tie Point 1 – The intent of tie-point 1 is to create a split in the raw water supply line such that raw water can be sent to either the existing or the new water treatment plants.
   a) The existing 12” DI Raw Water Supply pipeline shall be isolated and drained.
   b) Two new valves shall be installed to allow isolation of the existing and new water treatment plants as follows:
      1) One new 12” gate valve with valve box to isolate the existing WTP.

2) One new 12” gate valve with valve box to isolate the new WTP.

c) After the new block valves have been installed, the existing 12” DI Raw Water Supply pipeline shall be returned to service.

d) Construction on the new 12” HDPE DR 17 raw water supply pipeline can then commence on the Contractors’ schedule.

3. Tie Point 2 – The intent of tie-point 2 is to provide a new connection to supply potable water to the new WTP for filter backwash.

a) The new 12” HDPE Filter Backwash Supply pipeline connection point shall be made upstream of an existing 12” isolation valve located approximately 55 feet to the East of the existing fence. A new 12” yard valve with valve box shall be installed, closed, and protected with a blind flange until the new piping is installed. This is an active potable water line and procedures outlined in AWWA C651 for cutting into existing water mains shall be followed. Construction on the new 12” DR17 HDPE Filter Backwash Supply pipeline can occur on the Contractors schedule.

4. Tie Point 3 – The intent of tie-point 3 is to provide a new connection for the waste outlet to the sanitary sewer system at tie-point 6 next to Zimovia Highway.

a) The outlet flow structure can be installed in this phase or in parallel with the EQ basin work.

b) After ensuring the existing 12” Roughing Filter drain to ditch pipeline is empty and Roughing Filter drain gate valves are closed, the pipeline can be located by following it back from the gate valve near the ditch to the East and to tie-point 3.

c) After completion of the backwash EQ basin outlet flow control structure, the proposed 6” HDPE Filter Backwash Pipeline can be constructed. The new pipeline shall be routed west from the flow control structure and then down the road to tie-point 5 at the repurposed 10” asbestos cement water main. The balance of this pipeline down to the new wastewater manhole can then be completed.

d) Connection of controls inside the outlet flow control structure can occur during Phase 3; however, all piping and valves should be installed at this time to provide a drain point for the existing system until later phases are completed.

C. Electrical:

1. Protect existing electrical and communications cabling located near the existing roadway. This electrical main supplies users located further up the access road. Complete utility locates as required.

D. Status during Phase 1:

1. Source of potable water: Old Plant

2. Number of shutdowns to existing potable water production: 1 or 2

3.02 PHASE 2: Construction of The New Water Treatment Plant.

After civil site preparation has been completed and yard piping tie-ins have been constructed, construction on the New WTP building and treatment process shall commence. Contractor shall maintain access to the existing treatment plant building at all times. Coordinate work with Owner and Operators to ensure no interruption of service at the existing plant occurs during construction. Pay particular attention to site drainage and storm water pollution prevention planning.

A. Civil:

1. Continue site civil / drainage work. Ensure existing drain lines to the ditch located between the existing roadway and the existing treatment building are maintained and/or rerouted to provide uninterrupted use of these lines. Provide temporary parking and/or temporary building access as required.

B. Electrical:

1. Install temporary power drops as required for construction.

C. Status:

1. Source of potable water: Old Plant

2. Number of shutdowns to existing potable water production: 0

3.03 PHASE 3: Demolition of Existing Roughing Filters, Construction of Backwash Equalization Basins, and Installation of Pipe Gallery Expansion at Clearwell.

A. Civil:

1. Continue site civil / drainage work. Ensure existing drain lines to the ditch located between the existing roadway and the existing treatment building are maintained and/or rerouted to provide uninterrupted use of these lines. Provide temporary parking and/or temporary building access as required.

2. Construction trenching and grading will be required to the north of the roughing filters, between the existing slow sand filters and the control room / ozone contact basin, and around the front of the existing slow sand filters to accommodate piping installation. Finish grading to match site and ensure surface drainage is continuous.

B. Process / Mechanical:

1. Roughing Filter conversion to Backwash Equalization Basins:

a) The existing roughing filters shall be decommissioned and converted to Backwash Equalization Basins. To do so, the existing roughing filters must be placed in bypass mode and a temporary ozone venting system installed as follows:

1) Tent the existing flow splitter box with heavy plastic sheeting and install a small exhaust fan with minimum 4” diameter hose to the exterior of the building and a minimum of 20 feet from proposed work areas. The fan must be capable of moving a minimum of 10CFM. Follow all required safety protocols, including testing for the presence of ozone in work areas, as required by OSHA 1910 or other statutes as applicable.

2) Close the roughing filter influent valves and plug the end of line (valves do not provide tight seal when closed), close the slow sand filter bypass valve, and open the roughing filter bypass valve. This will direct flow into the roughing filter flow splitter box and out the four (4) 8” Slow Sand Filter Influent pipelines.

3) Close the existing Roughing Filter Backwash inlet valves.

4) Demo and cap the potable water line used for backwashing the slow sand filters. A shut-down will be required and AWWA C651 procedures utilized. A cap or blind flange shall be installed as close to the potable water header as possible.

b) Once the above items are complete, the existing roughing filter internals can be demolished, media removed, and partial concrete demolition completed per the drawings and specifications. The existing 12” DI roughing filter influent pipelines can be cut, grouted, and capped liquid tight. After the demolition of the piping is complete, all exposed pipe penetrations can be grouted and sealed liquid tight. After

concrete cuts are complete, follow details on drawings to protect exposed concrete and support steel.

c) Once all concrete work is complete, the installation of the jet mixing system can be completed and the new 18" backwash / waste inlet header installed.

2. Clearwell pipe gallery expansion and new High Service Pump Installation

a) Before commencing work in this area, install a tented area over the existing clearwell with heavy plastic sheeting to prevent contamination of potable water in the clearwell. Use care to protect this area during construction. This shall be maintained throughout the project while any work in the clearwell building is underway.

b) A temporary bypass pipe must be installed from the existing high service pumps in the pipe gallery to a connection point to the south to allow piping demolition in this area (see drawings X-110 & M-400). The temporary bypass pipe allows for demolition of existing piping and installation of an expanded pipe gallery that provides space for the new high service pumps.

c) Piping demolition and concrete work can progress per the drawings while continuing to use the existing high service pumps. The new high service pumps can be installed and only a small pipe section on either side of the new high service pumps will need to be connected during a shut-down. After completing the installation, disinfection, and testing of the new high service pumps, the existing pumps can be demolished.

d) The new filtered water piping can be completed from the new WTP, around the back of the Backwash EQ Basins, along the south side of the existing slow sand filters, and to the clearwell pipe gallery. The line should be completed to the clearwell and all three motor operated valves installed. The two motor operated valves that direct water to the future contact basins should have a temporary blind installed until the piping is completed to the new contact basins.

e) Additional piping demolition in this area can be completed on the Contractors schedule.

f) Install the new flow meter and associated potable water piping inside the existing control building. Follow AWWA C651 procedures to return this section of piping to service.

C. Electrical:

1. Complete electrical work as required for temporary power to the ventilation fan and permanent power and controls wiring for level instruments and the mixing pumps in the backwash equalization basins.

2. Complete electrical demolition and new electrical work as required in the pipe gallery and expanded pipe gallery areas. Install all conduits between the pipe gallery and future electrical room inside the existing control building.

3. Complete new electrical room and install conduits for wiring between the new building and existing control building. This work cannot be completed until the existing ozone generation equipment has been demolished.

D. Status:

1. Source of potable water: Old Plant and/or New Plant

2. Number of shutdowns to existing potable water production: 1 or 2

3.04 PHASE 4: Testing and Commissioning of the New WTP

A. After completion of the new WTP building, new filtration equipment, new backwash EQ basin, and backwash waste piping is completed, the contractor shall provide all equipment testing, process testing, functional testing, and commissioning of the new WTP Process for a period of 4 Weeks.

B. All filtered water shall be routed to waste until DEC Temporary Approval to Operate has been obtained. No water can be sent from the new WTP to the new chlorine contact tank or clearwell until this DEC approval has been received. All backwash and sludge shall be directed to the new backwash EQ basins and on to lift station 6.

C. All operational training associated with this phase shall occur prior to commissioning and all electronic O&M manuals shall be provided to the Owner. During this time the new WTP building and treatment process punch list shall be completed. If finished water does not meet water quality requirements, the commissioning period shall restart. See commissioning specifications for further details.

3.05 PHASE 5: Demolition of Existing Slow Sand Filters and Construction of Chlorine Contact Basins, Demolition of Existing Ozone System and Construction of New On-Site Hypochlorite Generation System, Construct New Electrical Room

A. Civil:

1. Continue site civil / drainage work. Provide temporary parking and/or temporary building access as required.

2. Construction trenching and grading will be required in the area around the existing ozone contact basin to prepare for demolition in this area. Finish grading around the new back-up generator pad (placed over old ozone contact basin) is required to match site and ensure surface drainage is continuous.

B. Process / Mechanical:

1. Following the commissioning and acceptance of the new treatment process, the existing Ozone System in the Control room shall be decommissioned to provide space for the new On-Site Hypochlorite Generation System (OSHG). The associated ozone contact basin shall be demolished down to the first waterstop joint (approximately elevation 258.3’). The new OSHG system shall be constructed, tested, and commissioned. Once commissioned, disinfection shall be switched over to the new hypochlorite metering pump system. Following the testing and acceptance of the disinfection metering system, the existing OSHG system and soda ash metering system shall be decommissioned.

2. A 3” conduit that will carry the new sodium hypochlorite supply tubing from the new Chlorine Generation Room (inside the existing Control Building) shall be routed to the new Water Treatment Plant.

3. The existing Slow Sand Filters shall be demolished and converted to Chlorine Contact Basins. The existing filtration cell numbers will become the new basin numbers to maintain consistency. The existing Slow Sand Filters shall be drained, and the media shall be removed. This step requires removal and off-site disposal of a significant amount of filter media. Existing 6’x6’ ships doors are located on the west side of each cell for this purpose. Sand from sand filters shall be transported by the Contractor to the lower reservoir parking area, or at a Borough specified location within two miles.

4. The existing influent headers and effluent collection manifolds shall be removed, and the existing overflow header shall be relocated. New 14” perforated PVC influent manifolds shall be installed in Cell 1 and Cell 4, and new 8” PVC perforated outlet header shall be installed in Cell 2 and Cell 3. The perforated outlet headers shall be tied into the existing Cell 2 and Cell 3 outlet / clearwell inlet pipelines (existing 8”). The existing concrete

walls separating Cell 1 / Cell 2, and Cell 3 / Cell 4 shall have a section removed per the demolition drawings to facilitate flow between cells. This section shall be flush with the existing floor. The Chlorine Contact Basin Effluent Isolation valves shall remain closed until the completion of this phase. After completion of the required modifications, procedures outlined in AWWA C652 shall be followed prior to placing the new contact basins into service.

5. A short shut-down will be required to facilitate final isolation of the existing clearwell once old influent piping from Cell 1 and 4 are removed. Similar procedures as outlined in AWWA C652 must be followed to complete this work.

C. Electrical:

1. Once the existing ozone equipment has been demolished, the new electrical room can be constructed. Complete electrical work as required for permanent power and controls wiring as indicated in the plans and specifications.

D. Status:

1. Source of Potable Water: New Plant
2. Number of Shutdowns to Existing Potable Water Production: 1

3.06 PHASE 6: Demolition of Existing Chlorine Generation and Soda Ash Equipment

A. Civil:

1. None

B. Electrical:

1. Demolish electrical wire and conduit as required to completely remove this equipment from service back to the control panel as shown on the drawings.

C. Status:

1. Source of Potable Water: New Plant
2. Number of Shutdowns to Existing Potable Water Production: 0

PART 4 - FINAL COMPLETION

4.01 See Specifications for Final Completion and Project Closeout Requirements.

END OF SECTION

SECTION 01 20 00 – PRICE AND PAYMENT PROCEDURES

PART 1 – GENERAL

1.01 SCOPE

A. The method of measurement and basis of payment is described in this section.

1.02 GENERAL

A. The total bid price for each item of the Contract shall cover all work shown on the Construction Drawings and required by the Specifications and other Contract Documents. All costs in connection with the Work, including furnishing all materials, equipment, supplies and appurtenances; providing all construction, equipment, and tools; and performing all necessary labor and supervision to fully complete the Work, shall be included in the unit and lump sum bid prices. No item required by the Contract Documents for the proper and successful completion of the Work will be paid for outside of or in addition to the prices submitted in the bid. All work not specifically set forth as a pay item in the Bid Form included but not limited to reclamation, sodding, topsoil, seed, reinstalling existing signs and fences, replacing construction caused damaged signs and driveways, shall be considered a subsidiary obligation of the Contractor and all costs in connection therewith shall be included in the bid prices. Bid prices will also apply to additional similar work that is not shown on the plans that the Engineer may require to be installed during the project.

B. All work completed under the Contract will be measured by the Engineer according to the United States Standard Measure. A station when used as a definition or term of measurement shall be 100 linear feet measured horizontally, unless otherwise specified.

C. The method of measurement and computations to be used in determination of quantities of material furnished and of work performed under the Contract will be those methods generally recognized as conforming to standard engineering practice.

D. Unless otherwise specified, longitudinal measurements for area computations will be made horizontally, and no deductions will be made for individual items having an area of nine square feet or less. Unless otherwise specified, transverse measurements for area computations will be the neat dimensions shown on the Drawings or ordered in writing by the Engineer.

E. All items which are measured by the linear foot, such as pipe culverts, sewers or water lines, will be measured parallel to the base or foundations upon which structures are placed, unless otherwise shown on the Drawings.

1.03 ESTIMATED QUANTITIES

A. All estimated quantities stipulated in the Bid Form or other Contract Documents are approximate and are to be used only (a) as a basis for estimating the probable cost of the Work and (b) for the purpose of comparing the bids submitted for the Work. The basis of payment for work and materials will be by lump sum or unit price as indicated. The Contractor shall supply a schedule of values for each lump sum item to be reviewed and approved by the Engineer.

B. The Contractor agrees to make no claim for damages, anticipated profits, or otherwise on account of any difference between the amounts of work actually performed and materials actually furnished and the estimated amounts herein.

C. If the Contractor desires to receive payment for materials in storage for any bid item, the Contractor shall provide a breakout of all materials and their actual costs for that bid item. The Contractor shall furnish the Engineer copies of the supplier's invoices relating to the breakout to verify all materials being requested for payment under that bid item. The Contractor shall furnish copies of the required invoices no later than 5 business days before the cut-off-date of each progress payment. Invoices received later than 5 business days before the cutoff date will not be included in that progress payment. Materials in storage will only be paid for major bid items and will not be paid for associated items such as nuts, bolts, glue, gaskets, tools, etc. Materials in storage are Contractor responsibility and Contractor must provide insurance to cover any loss, theft, damage, etc. Quantities to be utilized on the monthly pay request will be based on signed daily quantities.

D. The following applies to materials in storage; materials in storage will only be allowed on the first, three pay requests received from the Contractor unless otherwise agreed to by the Engineer. Materials in storage must be tied to an actual bid item, and quantities in storage must be removed from the storage quantity as work progresses. All materials in storage will be removed from the pay estimate no later than the sixth pay estimate, for each construction season. Any materials ordered and stored over the winter shall be secured and properly covered in accordance with the material manufactures recommendations and per the Engineer's directions.

E. Contractor shall develop a form on which to record the percent complete for all lump sum bid items and submit the form at the preconstruction meeting, to the Engineer for approval. At the end of each pay period the Engineer and Contractor must agree on bid schedule values and the percent completion actually installed. A copy signed by the Contractor must be distributed to the Resident Project Representative on a monthly basis 5 days before the monthly pay period ends. Payment for lump sum items shall be made in accordance with the agreed upon percent complete each progress payment.

1.04 METHOD OF MEASUREMENT AND BASIS OF PAYMENT

A. BASE BID SCHEDULE

101 – Mobilization and Demobilization (Lump Sum)
Payment will be made on a lump sum basis for all Contractor Mobilization and Demobilization efforts. Disposal of unsalvageable materials at a permitted location shall be incidental to Mobilization and Demobilization. Bonding and Insurance requirements shall be incidental to this Pay Item.

102 – Construction Survey and Record Drawings (Lump Sum)
Payment will be made on a lump sum basis for all work associated with project construction surveying, maintaining on-site construction record drawings, and submitting final record drawings. Preparation of all detailed record drawings in accordance with the specifications will also be paid under this item. Forty percent (40%) of this line item will be withheld until the Resident Project Representative approves record drawings.

103 – Storm Water Pollution Prevention Plan and Erosion and Pollution Control (Lump Sum)
Payment will be made on a lump sum basis for all Contractor Erosion, Sediment, and Pollution Control efforts including preparation of a project specific erosion and sediment control plan, and furnishing and installing erosion and sediment control measures, and maintaining the erosion and sediment control during the project.

104 – Furnishing Water Plant Treatment Process Equipment (Lump Sum)
Payment will be made on a lump sum basis in the amount of $3,442,889.70 for the design, fabrication, assemblage, and transport of the Treatment Process Equipment to Wrangell. This amount shall be paid to

AWC, Inc. in accordance with a pre-procurement process undertaken by the Borough. Detailed shop drawings and equipment specifications of procured equipment can be viewed in supplemental sections of the Bid Documents.

105 – Civil Site Work (Lump Sum)
Payment will be made on a lump sum basis for all site grading for the driveway, parking areas, New Water Treatment Plant, site concrete, and all yard piping outside of the building. All blasting and or mechanical excavation shall be included in the pay item.

106 – Construction of New Water Treatment Plant (Lump Sum)
Payment will be made on a lump sum basis for all Work required to complete the New Water Treatment Plant shown on the Drawings and specified herein. This Pay Item shall include the standby generator and all Work not specified in other pay items and all Work necessary to provide a final finished project capable of the performance specified for all components and systems of the project.

107 – Startup, Commissioning, Automation, Switchover, Project Operation and Maintenance Manuals (Lump Sum)
Payment will be made on a lump sum basis for Contractor to provide the equipment, personnel, and logistical support to perform all system Startup, Commissioning, Automation, and Switchover Work specified. This Work includes, but is not limited to:

1. Startup, Testing and Commissioning of all building systems as specified herein.
2. Startup, Testing and Commissioning of all water, wastewater and reject water treatment and handling systems as specified herein.
3. Switching the final operations of the project from the existing water treatment plant to the new water treatment, as directed and approved by the Owner's supervisory staff.
4. Preparation and submittal of project Operation and Maintenance Manuals.

108 – Furnish and Install Filter Backwash-to-Waste Line, Flow Control Valve, and Vault (Lump Sum)
Payment will be made on a lump sum basis for Contractor to furnish and install the filter backwash line from the point it leaves the Backwash equalization basin to the intersection manhole on the Zimovia Highway. This pay item shall include all work associated with the manholes, control vault, insertion of a 6" HDPE in the existing 10" asbestos cement main, and all other work necessary for the construction of the Filter Backwash-to Waste line.

109 – Conversion of Slow Sand Filter to Chlorine Contact Basins (Lump Sum)
Payment will be made on a lump sum basis for Contractor to convert the existing slow sand filter to chlorine contact basins. This pay item shall include all work associated with the high capacity pump relocation into a new concrete addition. Removal and stockpiling of sand in an owner selected location on site is also included in this pay item.

110 – Conversion of Roughing Filter to Backwash Equalization Basin (Lump Sum)
Payment will be made on a lump sum basis for Contractor to convert the existing roughing filters to the backwash equalization basin. Pay item shall cover all work inside the building envelope.

111 – Conversion of Existing Administration Building to Control Building (Lump Sum)
Payment will be made on a lump sum basis for Contractor to convert the existing administration building to the control building, including electrical work. Removal of chemical injection systems and ozone injection system shall be covered under this pay item.

END OF SECTION 01 20 00

SECTION 01 33 00 – SUBMITTAL PROCEDURES

PART 1 GENERAL

1.1 DESCRIPTION: The work of this section consists of submittal requirements before and during construction.

1.2 SCHEDULES: As soon as possible after Notice of Award and before beginning any work, submit Progress Schedule and Schedule of Values as a package. Engineer will review the Progress Schedule and the Schedule of Values for format and content.

A. Progress Schedule: Submit three copies of Progress Schedule (normally in bar chart form) showing estimated starting and completion dates for each part of the work. The first progress payment will not be issued until an acceptable progress schedule is submitted.

B. Schedule of Values: Submit a schedule of dollar values based on the Project Schedule including all major components and milestones for each phase. Break down into component parts each phase using a series of operations for which progress payments may be requested. The total cost of all items shall equal the contract sum. The Engineer may request data to verify accuracy of dollar values.

1.3 SHOP DRAWINGS, PRODUCT DATA, AND SAMPLES

A. General Procedures:

1. As specified in the individual sections, forward submittals to Engineer at least 30 days before need for approval. ENGINEER will establish an electronic submittal registry for this project through Newforma Info Exchange (https://infoexchange.newforma.com/). DOWL will provide training for use of the Exchange and supply a template submittal cover page for entry of submittal information.
2. Coordinate all submittals and review them for legibility, accuracy, completeness, and compliance with contract requirements. Forward submittals that are related to or affect one another as a package to facilitate coordinated review.
3. Submittals will not be accepted for review if identification or approval stamps are missing or are placed on the back of the submittal, an incorrect amount of submittals are submitted, the transmittal form is incorrectly filled out, submittals are not coordinated, or submittals do not show evidence of Contractor's approval.
4. Engineer reserves the right to require submittals in addition to those called for in individual sections.

B. Specific Procedures:

1. Shop Drawings: Identify each copy of shop drawings with contract drawing number in lower right corner.
2. Samples: Samples shall be large enough to illustrate clearly the functional characteristics and full range of color, texture, or pattern.
3. Manufacturers' Literature: Submit only pertinent pages; mark each copy of standard printed data to identify products referenced in specification section.

C. Engineer Approval:

1. Engineer will indicate approval or disapproval of each submittal and the reasons for disapproval.
2. After Engineer review, revise and resubmit as required. Identify changes made since previous submittal.
3. When Engineer has approved submittals, Contractor's copies will be returned. Any work done before approval shall be at Contractor's own risk. No payment shall be made for any work performed without an approved submittal.

1.4 APPROVED EQUALS

A. For each item proposed as an "approved equal," submit a separate request that is clearly marked as an “approved equal request” to the Engineer. With each request submit supporting data, including:

1. Drawings and samples as appropriate.
2. Comparison of the qualities of the proposed item with that specified.
3. Changes required in other elements of the work because of the substitution.
4. Name, address, and telephone number of vendor.
5. Manufacturer's literature regarding installation, operation, and maintenance, including schematics for electrical and hydraulic systems, lubrication requirements, and parts lists. Describe availability of maintenance service, and state source of replacement materials.

B. A request for approval constitutes a representation that Contractor:

1. Has investigated the proposed item and determined that it is equal or superior in all respects to that specified.
2. Will provide the same warranties for the proposed item as for the item specified.
3. Has determined that the proposed item is compatible with interfacing items.
4. Will coordinate the installation of an approved item and make all changes required in other elements of the work because of the substitution.
5. Waives all claims for additional expenses that may be incurred as a result of the substitution.

C. The Engineer has final determination whether or not an item is approved and considered equal.

1.5 MANUFACTURER'S INSTALLATION INSTRUCTIONS: When contract documents require compliance with manufacturer's printed instructions, provide one complete set of instructions for Engineer and keep another complete set of instructions at the project site until substantial completion.

PART 2: PRODUCTS: (NOT USED).

PART 3: EXECUTION: (NOT USED).

END OF SECTION

SECTION 01 45 00 - QUALITY REQUIREMENTS

PART 1 - GENERAL

1.1 SUMMARY

A. Section includes administrative and procedural requirements for quality assurance and quality control.

B. Testing and inspection services are required to verify compliance with requirements specified or indicated. These services do not relieve Contractor of responsibility for compliance with the Contract Document requirements.
   1. Specified tests, inspections, and related actions do not limit Contractor's other quality-assurance and quality-control procedures that facilitate compliance with the Contract Document requirements.
   2. Requirements for Contractor to provide quality-assurance and quality-control services required by Engineer, Owner, Commissioning Authority, or authorities having jurisdiction are not limited by provisions of this Section.

1.2 DEFINITIONS

A. Experienced: When used with an entity or individual, "experienced" unless otherwise further described means having successfully completed a minimum of five previous projects similar in nature, size, and extent to this Project; being familiar with special requirements indicated; and having complied with requirements of authorities having jurisdiction.

B. Field Quality-Control Tests and Inspections: Tests and inspections that are performed on-site for installation of the Work and for completed Work.

C. Installer/Applicator/Erector: Contractor or another entity engaged by Contractor as an employee, Subcontractor, or Sub-subcontractor, to perform a particular construction operation, including installation, erection, application, assembly, and similar operations.
   1. Use of trade-specific terminology in referring to a Work result does not require that certain construction activities specified apply exclusively to specific trade(s).

D. Preconstruction Testing: Tests and inspections performed specifically for Project before products and materials are incorporated into the Work, to verify performance or compliance with specified criteria. Unless otherwise indicated, copies of reports of tests or inspections performed for other than the Project do not meet this definition.

E. Product Tests: Tests and inspections that are performed by a nationally recognized testing laboratory (NRTL) according to 29 CFR 1910.7, by a testing agency accredited according to NIST's National Voluntary Laboratory Accreditation Program (NVLAP), or by a testing agency qualified to conduct product testing and acceptable to authorities having jurisdiction, to establish product performance and compliance with specified requirements.

F. Source Quality-Control Tests and Inspections: Tests and inspections that are performed at the source; for example, plant, mill, factory, or shop.

G. Testing Agency: An entity engaged to perform specific tests, inspections, or both. Testing laboratory shall have the same meaning as testing agency.

H. Quality-Assurance Services: Activities, actions, and procedures performed before and during execution of the Work to guard against defects and deficiencies and substantiate that proposed construction will comply with requirements.

I. Quality-Control Services: Tests, inspections, procedures, and related actions during and after execution of the Work to evaluate that actual products incorporated into the Work and completed construction comply with requirements. Contractor's quality-control services do not include contract administration activities performed by Engineer.

1.3 DELEGATED-DESIGN SERVICES

A. Performance and Design Criteria: Where professional design services or certifications by a design professional are specifically required of Contractor by the Contract Documents, provide products and systems complying with specific performance and design criteria indicated.
   1. If criteria indicated are not sufficient to perform services or certification required, submit a written request for additional information to Engineer.

B. Delegated-Design Services Statement: Submit a statement, signed and sealed by the responsible design professional, for each product and system specifically assigned to Contractor to be designed or certified by a design professional, indicating that the products and systems are in compliance with performance and design criteria indicated. Include list of codes, loads, and other factors used in performing these services.

1.4 CONFLICTING REQUIREMENTS

A. Conflicting Standards and Other Requirements: If compliance with two or more standards or requirements is specified and the standards or requirements establish different or conflicting requirements for minimum quantities or quality levels, inform the Engineer regarding the conflict and obtain clarification prior to proceeding with the Work. Refer conflicting requirements that are different, but apparently equal, to Engineer for clarification before proceeding.

B. Minimum Quantity or Quality Levels: The quantity or quality level shown or specified shall be the minimum provided or performed. The actual installation may comply exactly with the minimum quantity or quality specified, or it may exceed the minimum within reasonable limits. To comply with these requirements, indicated numeric values are minimum or maximum, as appropriate, for the context of requirements. Refer uncertainties to Engineer for a decision before proceeding.

1.5 ACTION SUBMITTALS

1.6 INFORMATIONAL SUBMITTALS

A. Contractor's Statement of Responsibility: When required by authorities having jurisdiction, submit copy of written statement of responsibility submitted to authorities having jurisdiction before starting work on the following systems:
   1. Seismic-force-resisting system, designated seismic system, or component listed in the Statement of Special Inspections.
   2. Main wind-force-resisting system or a wind-resisting component listed in the Statement of Special Inspections.

B. Testing Agency Qualifications: For testing agencies specified in "Quality Assurance" Article to demonstrate their capabilities and experience. Include proof of qualifications in the form of a recent report on the inspection of the testing agency by a recognized authority.

C. Permits, Licenses, and Certificates: For Owner's record, submit copies of permits, licenses, certifications, inspection reports, releases, jurisdictional settlements, notices, receipts for fee payments, judgments, correspondence, records, and similar documents established for compliance with standards and regulations bearing on performance of the Work.

1.7 REPORTS AND DOCUMENTS

A. Test and Inspection Reports: Prepare and submit certified written reports specified in other Sections. Include the following:
   1. Date of issue.
   2. Project title and number.
   3. Name, address, telephone number, and email address of testing agency.
   4. Dates and locations of samples and tests or inspections.
   5. Names of individuals making tests and inspections.
   6. Description of the Work and test and inspection method.
   7. Identification of product and Specification Section.
   8. Complete test or inspection data.
   9. Test and inspection results and an interpretation of test results.
   10. Record of temperature and weather conditions at time of sample taking and testing and inspection.
   11. Comments or professional opinion on whether tested or inspected Work complies with the Contract Document requirements.
   12. Name and signature of laboratory inspector.
   13. Recommendations on retesting and re-inspecting.

B. Manufacturer's Technical Representative's Field Reports: Prepare written information documenting manufacturer's technical representative's tests and inspections specified in other Sections. Include the following:
   1. Statement on condition of substrates and their acceptability for installation of product.
   2. Statement that products at Project site comply with requirements.

C. Summary of installation procedures being followed, whether they comply with requirements and, if not, what corrective action was taken.

D. Results of operational and other tests and a statement of whether observed performance complies with requirements.
   1. Other required items indicated in individual Specification Sections.

E. Factory-Authorized Service Representative's Reports: Prepare written information documenting manufacturer's factory-authorized service representative's tests and inspections specified in other Sections. Include the following:
   1. Statement that equipment complies with requirements.
   2. Results of operational and other tests and a statement of whether observed performance complies with requirements.
   3. Other required items indicated in individual Specification Sections.

1.8 QUALITY ASSURANCE

A. Qualifications paragraphs in this article establish the minimum qualification levels required; individual Specification Sections specify additional requirements.

B. Manufacturer Qualifications: A firm experienced in manufacturing products or systems similar to those indicated for this Project and with a record of successful in-service performance, as well as sufficient production capacity to produce required units. As applicable, procure products from manufacturers able to meet qualification requirements, warranty requirements, and technical or factory-authorized service representative requirements.

C. Fabricator Qualifications: A firm experienced in producing products similar to those indicated for this Project and with a record of successful in-service performance, as well as sufficient production capacity to produce required units.

D. Installer Qualifications: A firm or individual experienced in installing, erecting, applying, or assembling work similar in material, design, and extent to that indicated for this Project, whose work has resulted in construction with a record of successful in-service performance.

E. Professional Engineer Qualifications: A professional engineer who is legally qualified to practice in jurisdiction where Project is located and who is experienced in providing engineering services of the kind indicated. Engineering services are defined as those performed for installations of the system, assembly, or product that are similar in material, design, and extent to those indicated for this Project.

F. Specialists: Certain Specification Sections require that specific construction activities shall be performed by entities who are recognized experts in those operations. Specialists shall satisfy qualification requirements indicated and shall be engaged for the activities indicated.
   1. Requirements of authorities having jurisdiction shall supersede requirements for specialists.

G. Testing and Inspecting Agency Qualifications: An NRTL, an NVLAP, or an independent agency with the experience and capability to conduct testing and inspection indicated, as documented according to ASTM E329; and with additional qualifications specified in individual Sections; and, where required by authorities having jurisdiction, that is acceptable to authorities.

H. Manufacturer's Technical Representative Qualifications: An authorized representative of manufacturer who is trained and approved by manufacturer to observe and inspect installation of manufacturer's products that are similar in material, design, and extent to those indicated for this Project.

I. Preconstruction Testing: Where testing agency is indicated to perform preconstruction testing for compliance with specified requirements for performance and test methods, comply with the following:
   1. Contractor responsibilities include the following:
      a. Provide test specimens representative of proposed products and construction.
      b. Submit specimens in a timely manner with sufficient time for testing and analyzing results to prevent delaying the Work.
      c. When testing is complete, remove test specimens and test assemblies, do not reuse products on Project.

2. Testing Agency Responsibilities: Submit a certified written report of each test, inspection, and similar quality-assurance service to Engineer and Commissioning Authority, with copy to Contractor. Interpret tests and inspections and state in each report whether tested and inspected work complies with or deviates from the Contract Documents.

1.9 QUALITY CONTROL

A. Owner Responsibilities: Where quality-control services are indicated as Owner's responsibility, Owner will engage a qualified testing agency to perform these services.
   1. Owner will furnish Contractor with names, addresses, and telephone numbers of testing agencies engaged and a description of types of testing and inspection they are engaged to perform.
   2. Costs for retesting and re-inspecting construction that replaces or is necessitated by Work that failed to comply with the Contract Documents will be charged to Contractor.

B. Contractor Responsibilities: Tests and inspections not explicitly assigned to Owner are Contractor's responsibility. Perform additional quality-control activities, whether specified or not, to verify and document that the Work complies with requirements.
   1. Engage a qualified testing agency to perform quality-control services.
      a. Contractor shall not employ same entity engaged by Owner, unless agreed to in writing by Owner.
   2. Notify testing agencies at least 24 hours in advance of time when Work that requires testing or inspection will be performed.
   3. Where quality-control services are indicated as Contractor's responsibility, submit a certified written report, in duplicate, of each quality-control service.
   4. Testing and inspection requested by Contractor and not required by the Contract Documents are Contractor's responsibility.
   5. Submit additional copies of each written report directly to authorities having jurisdiction, when they so direct.

C. Retesting/Re-inspecting: Regardless of whether original tests or inspections were Contractor's responsibility, provide quality-control services, including retesting and re-inspecting, for construction that replaced Work that failed to comply with the Contract Documents.

D. Manufacturer's Field Services: Where indicated, engage a factory-authorized service representative to inspect field-assembled components and equipment installation, including service connections. Report results in writing as specified in Section 013300 "Submittal Procedures."

E. Manufacturer's Technical Services: Where indicated, engage a manufacturer's technical representative to observe and inspect the Work. Manufacturer's technical representative's services include participation in preinstallation conferences, examination of substrates and conditions, verification of materials, observation of Installer activities, inspection of completed portions of the Work, and submittal of written reports.

F. Contractor's Associated Requirements and Services: Cooperate with agencies and representatives performing required tests, inspections, and similar quality-control services, and provide reasonable auxiliary services as requested. Notify agency sufficiently in advance of operations to permit assignment of personnel. Provide the following:
   1. Access to the Work.

2. Incidental labor and facilities necessary to facilitate tests and inspections.
3. Adequate quantities of representative samples of materials that require testing and inspection. Assist agency in obtaining samples.
4. Facilities for storage and field curing of test samples.
5. Preliminary design mix proposed for use for material mixes that require control by testing agency.
6. Security and protection for samples and for testing and inspection equipment at Project site.

G. Coordination: Coordinate sequence of activities to accommodate required quality-assurance and quality-control services with a minimum of delay and to avoid necessity of removing and replacing construction to accommodate testing and inspection.
   1. Schedule times for tests, inspections, obtaining samples, and similar activities.

1.10 SPECIAL TESTS AND INSPECTIONS

A. Special Tests and Inspections: Owner will engage a qualified testing agency to conduct special tests and inspections required by authorities having jurisdiction as the responsibility of Owner and as follows:
   1. Verifying that manufacturer maintains detailed fabrication and quality-control procedures and reviewing the completeness and adequacy of those procedures to perform the Work.
   2. Notifying Engineer and Contractor promptly of irregularities and deficiencies observed in the Work during performance of its services.
   3. Submitting a certified written report of each test, inspection, and similar quality-control service to Engineer with copy to Contractor and to authorities having jurisdiction.
   4. Submitting a final report of special tests and inspections at Substantial Completion, which includes a list of unresolved deficiencies.
   5. Interpreting tests and inspections and stating in each report whether tested and inspected work complies with or deviates from the Contract Documents.
   6. Retesting and re-inspecting corrected Work.

PART 2 - PRODUCTS (Not Used)

PART 3 - EXECUTION

3.1 TEST AND INSPECTION LOG

A. Test and Inspection Log: Prepare a record of tests and inspections. Include the following:
   1. Date test or inspection was conducted.
   2. Description of the Work tested or inspected.
   3. Date test or inspection results were transmitted to Engineer.
   4. Identification of testing agency or special inspector conducting test or inspection.

B. Maintain log at Project site. Post changes and revisions as they occur. Provide access to test and inspection log for Engineer's reference during normal working hours.
   1. Submit log at Project closeout as part of Project Record Documents.

3.2 REPAIR AND PROTECTION

A. General: On completion of testing, inspection, sample taking, and similar services, repair damaged construction and restore substrates and finishes.

1. Provide materials and comply with installation requirements specified in other Specification Sections or matching existing substrates and finishes. Restore patched areas and extend restoration into adjoining areas with durable seams that are as invisible as possible. Comply with the Contract Document requirements for cutting and patching in Section 017300 "Execution."

B. Protect construction exposed by or for quality-control service activities.

C. Repair and protection are Contractor's responsibility, regardless of the assignment of responsibility for quality-control services.

END OF SECTION

SECTION 01 60 00 - PRODUCT REQUIREMENTS

PART 1 - GENERAL

1.1 SECTION INCLUDES

A. Products.

B. Product delivery requirements.

C. Product storage and handling requirements.

D. Product options.

E. Equipment electrical characteristics and components.

1.2 PRODUCTS

A. At minimum, comply with specified requirements and reference standards. Specified products define standard of quality, type, function, dimension, appearance, and performance required.

B. Furnish products of qualified manufacturers that are suitable for intended use. Furnish products of each type by single manufacturer unless specified otherwise. Confirm that manufacturer's production capacity can provide sufficient product, on time, to meet Project requirements.

C. Domestic Products: Except where specified otherwise, domestic products are required and interpreted to mean products mined, manufactured, fabricated, or produced in United States or its territories. BABAA requirements apply to this project.

D. Do not use materials and equipment removed from existing premises except as specifically permitted by Contract Documents. Return any reusable materials or equipment to the Owner after consulting with Owner. All remaining DEMO materials shall be disposed of per local regulations in a certified landfill or other certified facility.

E. Furnish interchangeable components from same manufacturer for components being replaced.

1.3 PRODUCT DELIVERY REQUIREMENTS

A. Comply with delivery requirements in Section 01 74 19 - Construction Waste Management and Disposal.

B. Transport and handle products according to manufacturer's instructions.

C. Promptly inspect shipments to ensure products comply with requirements, quantities are correct, and products are undamaged. Remove installation manuals, O&M manuals, or other documentation and store in a secure location to ensure all documents are available to Owner.

D. Provide equipment and personnel to handle products; use methods to prevent soiling, disfigurement, or damage.

1.4 PRODUCT STORAGE AND HANDLING REQUIREMENTS

A. Store and protect products according to manufacturer's instructions.

B. Store products with seals and labels intact and legible.

C. Store sensitive products in weathertight, climate-controlled enclosures in an environment suitable to product.

D. For exterior storage of fabricated products, place products on sloped supports aboveground.

E. Provide bonded off-Site storage and protection when Site does not permit on-Site storage or protection.

F. Cover products subject to deterioration with impervious sheet covering. Provide ventilation to prevent condensation and degradation of products.

G. Store loose granular materials on solid flat surfaces in well-drained area. Prevent mixing with foreign matter.

H. Provide equipment and personnel to store products; use methods to prevent soiling, disfigurement, or damage.

I. Arrange storage of products to permit access for inspection. Periodically inspect to verify products are undamaged and are maintained in acceptable condition.

1.5 PRODUCT OPTIONS

A. Products Specified by Reference Standards or by Description Only: Products complying with specified reference standards or description.

B. Products Specified by Naming One or More Manufacturers: Products of one of manufacturers named and complying with Specifications; no options or substitutions allowed.

C. Products Specified by Naming One or More Manufacturers with Provision for Substitutions: Submit Request for Substitution for any manufacturer not named, according to Section 012500 - Substitution Procedures.

PART 2 - PRODUCTS - Not Used

PART 3 - EXECUTION - Not Used

END OF SECTION

SECTION 01 74 19 - CONSTRUCTION WASTE MANAGEMENT AND DISPOSAL

PART 1 - GENERAL

1.1 SUMMARY

A. Section Includes:
   1. Construction waste management plan.

1.2 PLAN REQUIREMENTS

A. Develop and implement construction waste management plan as approved by the Engineer.

B. Intent:
   1. Divert construction, demolition, and land-clearing debris to landfill or other Borough approved location for disposal.

1.3 SUBMITTALS

A. Section 013300 - Submittal Procedures contains requirements for submittals.

B. Construction Waste Management Plan: Submit construction waste management plan describing methods and procedures for implementation and monitoring compliance including the following:
   1. Transportation company hauling construction waste to waste processing facilities.
   2. Recycling and adaptive reuse processing facilities and waste type each facility will accept.
   3. Construction waste materials anticipated for recycling and adaptive reuse.
   4. Stockpiling location for sand and gravel from existing filters.
   5. On-Site sorting and Site storage methods.

1.4 CONSTRUCTION WASTE MANAGEMENT PLAN

A. Implement construction waste management plan at start of construction.

B. Review construction waste management plan at preconstruction meeting and progress meetings specified in Section 013000 - Administrative Requirements.

C. Distribute approved construction waste management plan to Subcontractors and others affected by plan requirements.

D. Oversee plan implementation, instruct construction personnel for plan compliance, and document plan results.

PART 2 - PRODUCTS - Not Used

PART 3 - EXECUTION

3.1 CONSTRUCTION WASTE COLLECTION

A. Collect construction waste materials in marked bins or containers and arrange for transportation to recycling centers or adaptive salvage and reuse processing facilities.

B. Maintain recycling and adaptive reuse storage and collection area in orderly arrangement with materials separated to eliminate co-mingling of materials required to be delivered separately to waste processing facility.

C. Store construction waste materials to prevent environmental pollution, fire hazards, hazards to persons and property, and contamination of stored materials.

D. Cover construction waste materials subject to disintegration, evaporation, settling, or runoff to prevent polluting air, water, and soil.

3.2 CONSTRUCTION WASTE DISPOSAL

A. Dispose of construction waste not capable of being recycled or adaptively reused by delivery to landfill, incinerator, or other legal disposal facility.

~~A.~~B. Hazardous materials shall not be disposed of in the Wrangell Class III Landfill. Asbestos Containing Material (ACM) or other materials not accepted by the landfill shall be handled and disposed of in accordance with the requirements of Alaska Department of Environmental Conservation and the Environmental Protection Agency.

END OF SECTION

SECTION 01 75 00 – STARTUP OF SYSTEMS AND COMMISSIONING

PART 1 -- GENERAL

1.1 GENERAL

A. Satisfactory testing and startup of new and modified facilities are prerequisites to successful completion of the contract requirements and shall be completed within the Contract Times.

B. Conduct all testing, check-out, startup, and related requirements indicated in the Contract Documents and provide documentation of same to the ENGINEER prior to requesting Substantial Completion from the ENGINEER. Where manufacturer onsite inspections are required before startup, the manufacturer shall furnish a written statement that the installation and check-out are complete and proper and that the item(s) are ready for startup.

C. Startup of the treatment plant will require the combined expertise of the CONTRACTOR, subcontractors, Package Treatment Plant Equipment manufacturer, ENGINEER, Systems Integrator, and OWNER. The CONTRACTOR shall be responsible for coordinating all parties for a successful startup: the ENGINEER and OWNER will be available for technical and operational advice prior to and during startup. The CONTRACTOR shall be on-site for all start-up efforts.

D. The Systems Integrator has designated roles as specified in the 40 61 13 to 40 75 15 specification sections. The CONTRACTOR will be available to support the efforts of the filter automation start-up with the Systems Integrator.

E. The Package Treatment Plant Equipment manufacturer has designated roles as specified in the 46 07 13 and 46 21 10 Specification Sections. The CONTRACTOR will be available to support the efforts of the Package Treatment Plant Equipment Start-up, testing and training.

F. General requirements for startup activities are included in this Section. More specific requirements may also be included in other portions of the Contract Documents.

G. Temporary facilities may be necessary. If so, CONTRACTOR shall design, provide, operate, and later decommission them.

1.2 DEFINITIONS

A. Startup is defined as testing, demonstrations, and other activities as required to achieve Substantial Completion. Startup includes pre-commissioning and commissioning activities, manufacturer’s services, certifications of readiness for testing, and troubleshooting, checkout, and shakedown activities.

B. Pre-commissioning is the systematic demonstration through testing and extended operation that major equipment and auxiliary systems, including related components, sub-systems, and systems operate properly and consistent with their intended function.
   1. Pre-commissioning shall simulate shutdown conditions, failure conditions, power fail and restart, bypass conditions, and failure resets. Pre-commissioning will not be considered complete until successful results and documentation of tests and manufacturer’s certifications required by the Contract Documents are submitted and accepted by the

ENGINEER. Pre-commissioning of all portions of the WORK shall be successfully completed prior to starting Commissioning.

C. Commissioning is the verification that the complete WORK functions on an extended basis in full conformance with the Contract requirements.

1.3 SUBMITTALS

A. Schedule: The schedule for startup shall be submitted in addition to the CONTRACTOR's overall CPM Construction Schedule.

B. Startup and Commissioning Plan: Not less than 30 Days prior to startup, submit for review a detailed Startup and Commissioning Plan. The CONTRACTOR shall revise the Plan as necessary based on review comments. The Plan shall include:
   1. Schedules for manufacturers' equipment certifications
   2. Schedules for submitting final Technical Manuals
   3. Schedule for training the OWNER's personnel
   4. Description of temporary facilities and schedule for installation and decommissioning them
   5. List of OWNER and CONTRACTOR-furnished supplies
   6. Detailed schedule of operations to achieve successful pre-commissioning and commissioning.
   7. Checklists and data forms for each item of equipment
   8. Coordination with the OWNER's staff, Systems Integrator, and the NF Supplier's staff
   9. Designation of a representative of the CONTRACTOR who has the authority to act in matters relating to startup and has experience in testing and startup.
   10. Designation of the roles and responsibilities of any Subcontractors that may be involved in startup activities.
   11. Safety, startup, and testing procedures.
   12. Proposed inspection and certification forms and records.
   13. Interconnection of new to existing facilities
      a. Date and time frame of proposed shutdown or interconnection, including sequence of events and activities to be conducted.
      b. A detailed description of sequences and activities for the planned shutdown and interconnection.
      c. Staff, equipment, and materials that will be at the Site before commencing the shutdown.
      d. Other provisions so that interconnection, testing, and startup will be completed within the planned time.

   14. Hydrostatic testing of water-holding structures and pipelines and other potable (If applicable) water equipment. Schedule and plan shall indicate source of water, testing and disinfection sequence, disinfection procedures, and the disposal of the water following disinfection, if applicable.

C. System Outage Requests: Request for shutdown of existing systems as necessary to test or start up new facilities.

D. Records and Documentation
   1. Where required by the specifications, submit equipment installation certifications under those Sections.
   2. Records of startup as indicated below.

PART 2 -- PRODUCTS (NOT USED)

PART 3 -- EXECUTION

3.1 GENERAL

A. Supplies
   1. The CONTRACTOR shall furnish:
      a. Necessary materials not listed for the OWNER to furnish
      b. Power
         1) Temporary power provisions shall be provided by the Contractor
         2) Power and heating costs for operation of the treatment equipment and lighting, heating, ventilation of buildings will be responsibility of Contractor until substantial completion.

B. Startup Records: The CONTRACTOR shall maintain the following during testing and startup and submit originals to ENGINEER:
   1. Lubrication and service records for each mechanical and electrical equipment item.
   2. Hours of daily operation for each mechanical and electrical equipment item.
   3. Equipment alignment and vibration measurement records.
   4. Logs of electrical measurements and tests.
   5. Instrumentation calibration and testing logs.
   6. Testing and validation of inputs, outputs, logic functions, status indications, and alarms.
   7. Factory and field equipment settings.
   8. Log of problems encountered and remedial action taken.
   9. Other records, logs, and checklists as required by the Contract Documents.

3.2 MALFUNCTIONS

A. During the extended operational demonstrations, all components, subsystems, systems, and equipment must properly run continuously 24 hours per day at rates indicated by the ENGINEER throughout the test period. Unless indicated otherwise, if any item fails or malfunctions during the test, the item shall be repaired and the test restarted at time zero with no credit given for the operating time before the failure or malfunction. Malfunctions satisfying all three of the following conditions will allow the demonstration period to resume at the elapsed time when the malfunction started:
   1. Malfunction did not cause any interruption of the continuous operation of any other components, subsystems, systems, and equipment.
   2. Malfunction was corrected without causing or requiring any components, subsystems, systems, and equipment to cease operations.
   3. Malfunction was corrected within one hour of the time the malfunction was detected (the one hour period includes the time required to locate the cause of the malfunction, beginning upon CONTRACTOR’s notification from the ENGINEER that a malfunction has occurred and ending when the item is corrected and the system is successfully placed back into operation).

B. The CONTRACTOR shall arrange for manufacturer's representatives to visit the Site as often as necessary to correct malfunctions.

3.3 PREREQUISITES

A. Pre-commissioning and commissioning activities shall be scheduled according to CPM Construction Schedule protocols. The following shall be completed before pre-commissioning begins.
   1. All Technical Manual information required by the Contract Documents has been submitted.
   2. Safety equipment, emergency shower and eyewash units, fire extinguishers, gas detectors, protective guards and shields, emergency repair kits, safety chains, handrails, gratings, safety signs, and valve and piping identification required by the Contract Documents are provided. Devices and equipment shall be fully functional, adjusted, and tested.
   3. Electrical tests, balancing, and adjustments have been completed.
   4. The ENGINEER has approved the Startup Plan.
   5. Temporary facilities are functional, adjusted, and ready for use.
   6. Individual instrumentation loops (analog, status, alarm, and control) have been verified functionally.
   7. Individual interlocks between the field-mounted control devices and the motor control circuits, control circuits of variable-speed controllers, and packaged system controls have been verified.

3.4 PRE-COMMISSIONING

A. The Contractor shall complete a pre-commissioning to test all functionality, operation and alarms on equipment installed.

B. After individual equipment items and subsystems have been tested and certified as required by the Technical Specifications, tests of systems comprised of single or multiple equipment items with appurtenant equipment and instruments and controls shall be conducted. Items of equipment shall be tested as part of a system to the maximum extent possible.

C. The CONTRACTOR shall furnish the ENGINEER at least 10 Days written notice confirming the start of pre-commissioning. The OWNER's staff will observe pre-commissioning.

D. If any system malfunctions, the item or equipment shall be repaired and the test restarted at time zero with no credit given for the elapsed time before the malfunction.

E. The CONTRACTOR shall demonstrate the manual and automatic modes of operation to verify proper control sequences, proper operation of software logic and controllers, etc.

F. Systems testing activities shall follow the detailed procedures and checklists in the Testing and Startup Plan. Completion of systems shall be documented by a report.

G. The CONTRACTOR shall demonstrate utility, chemical feed, safety equipment, and other support systems before whole process systems.

3.5 COMMISSIONING

A. Testing periods shall not include holidays, based on the OWNER's calendar.

B. The CONTRACTOR shall start up the plant and operate it without malfunction for a continuous 14 Day, 24 hour/day period. The ENGINEER will determine the operational parameters. If any equipment item, subsystem, or system malfunctions, the item or equipment shall be repaired and the test restarted at time zero with no credit given for the elapsed time before the malfunction.

1. A total of 14 days (2 weeks) is allotted in the project schedule for the commissioning phase and accounted for in the time allowance to achieve substantial completion.

C. The CONTRACTOR shall furnish the ENGINEER at least 10 Days written notice confirming the start of commissioning. The OWNER's staff will observe commissioning.

D. Defects that appear shall be promptly corrected. Time lost for wiring corrections, control point settings, or other reasons that interrupt the test may, at the judgment of the ENGINEER, be cause for extending the demonstration an equal amount of time.

E. The CONTRACTOR shall furnish the services of manufacturers' representatives, if necessary, to correct equipment malfunctions and assist with the commissioning demonstration.

F. The OWNER will furnish plant operators during the startup period to comply with requirements for discharging water. Certified operators will be under the direct supervision of and be responsible to the OWNER but will operate the plant in accordance with the Startup and Commissioning Plan.

G. During the commissioning demonstration, the CONTRACTOR shall:
1. Lubricate and maintain equipment in accordance with the manufacturers' recommendations.
2. Perform other activities needed to maintain proper operation of the equipment and systems.

END OF SECTION

SECTION 01 77 00 - CLOSEOUT PROCEDURES

PART 1 - GENERAL

1.1 DESCRIPTION:

The following specification includes all work involved in final closeout of this Project. Included are items such as post construction inspection, acceptance of the Work, closeout records, cleaning, and project record drawings.

1.2 RELATED WORK

Contract General Conditions

1.3 SUBMITTALS

All required closeout submittals shall be reviewed by the ENGINEER prior to final payment. Items to be submitted are:

A. Guarantees and Bonds. Provide guarantees and bonds as required herein and as provided by manufacturers of all products and equipment.

B. Certification of Completion: Certifying completion of construction, compliance with the Contract Documents, and waiver of any claims.

C. Contractor's Affidavit of Release of Liens.

D. Final Waiver of Lien.

E. Consent for Surety to Final Payment:

F. Insurance Certificate: Certificate to indicate which insurance coverages required by Contract General Conditions that are to remain in effect after project is completed.

G. Contractor’s Notice of Public Works Completion from the State of Alaska Department of Labor, Division of Wage and Hour

PART 2 - PRODUCTS (NOT USED)

PART 3 - EXECUTION

3.1 CLEANING

Sweep paved surface, including all adjacent haul streets and other incidental areas, soiled during construction. All lawn or grassed areas shall be raked and cleaned to level and remove all rocks, stones or other debris from construction.

3.2 SUBSTANTIAL COMPLETION AND FINAL INSPECTION

Submit written certification that project, or designated portion of Project, is substantially complete and request, in writing, a final inspection. The ENGINEER, OWNER, and any representatives of funding agencies will make an inspection within 10 days of receipt of any request.

Should the ENGINEER determine that the Work is substantially complete, he will prepare a punch list of deficiencies that need to be corrected before final acceptance, and issue a Notice of Substantial Completion with the deficiencies noted.

Should the ENGINEER determine that the Work is not substantially complete, he will immediately notify the CONTRACTOR, in writing, stating reasons. After the CONTRACTOR completes the Work, he shall submit certification and request for final inspection.

3.3 ACCEPTANCE OF THE WORK

After all deficiencies have been corrected, a Letter of Final Acceptance will be issued. If only designated portions of the project have been inspected, a Letter of Partial Acceptance will be issued for that portion corrected.

Acceptance may be given prior to correction of deficiencies which do not preclude operation and use of the facility; however, final payment will be withheld until all deficiencies are corrected. Until receipt of the Letter of Final Acceptance, the CONTRACTOR shall be responsible for the Work of this Contract.

END OF SECTION

SECTION 02 01 00 – GEOTECHNICAL REPORT

PART 1 - GENERAL

1.1 SUMMARY

A. See attached geotechnical report.

PART 2 - PRODUCTS – NOT USED

PART 3 - EXECUTION – NOT USED

END OF SECTION 02 01 00

June 7, 2022

Ms. Amber Al-Haddad
Capital Facilities Direct
City and Borough of Wrangell
P.O. Box 531
Wrangell, AK 99929

Subject: **Wrangell Water Treatment Plant Design**
Geotechnical Investigation

Dear Ms. Al-Haddad:

This letter presents the geotechnical data obtained from the field exploration and laboratory testing, our analysis and interpretation of the data, recommended geotechnical design parameters for the foundation for the building expansion, and recommendations for associated construction earthwork and construction inspection and testing.

INTRODUCTION

The City and Borough of Wrangell (CBW) intends to upgrade and expand the Water Treatment Plant (WTP) increasing the capacity from 1.4 Million Gallons per Day (MGD) to 2.26 MGD. As part of the upgrades a new filtration building will be constructed to the south of the existing WTP control building and roughing filter building. The new structure will have a footprint of approximately 990 square feet. The filtration building will contain a wet well for booster pumps that will need to be around 12 feet below the floor grade. Construction of the structure will require excavation of the existing slopes to the south of the WTP and shifting Wood Street alignment to the west.

SCOPE OF WORK

DOWL submitted a proposal dated January 17, 2022, describing our planned geotechnical engineering services including a subsurface investigation consisting of conducting a test pit exploration, laboratory testing, engineering analysis, letter report preparation, and geotechnical engineering recommendations.

In brief, the scope of work included:

- Perform a site visit to assess the conditions and inspect the rock slope south of the Roughing Filter building
- Excavate up to four test pits
- Performing various laboratory soils testing
- Preparation of a report of findings and recommendations

Our proposal was accepted, and we received Notice-to-Proceed on February 21, 2022.

FIELD EXPLORATION AND LABORATORY TESTING

Field Exploration

The field exploration, conducted on April 11 and 12, 2022, consisted of visiting the site on April 11 to inspect the site and the slope to the south of the WTP, and excavating, sampling, and logging five test pits on April12. Test pits were located by measuring tape from existing features. The approximate test pit locations are shown on Figure A-2, in Attachment A.

The test pits were excavated using a CAT 4200DT backhoe equipped with an 18-inch bucket and five ripping teeth. The excavator is owned and operated by CBW Public Works Department. A DOWL engineering geologist supervised the excavation and logged the test pits. The graphic test pit logs are presented in Attachment B, Test Boring Logs and Descriptive Guide.

Soil samples recovered during drilling were visual-manually classified in the field in general accordance with ASTM D2488 and sealed in plastic bags to preserve their natural water content. The samples were transported to DOWL's Anchorage laboratory partner, Alaska Testlab, for further testing.

No environmental testing or monitoring was conducted as a part of this investigation.

Laboratory testing

Laboratory tests were performed on select samples to measure soil index properties. These properties provide a basis for estimating engineering properties. Soil testing included moisture content, grain size analysis, and Atterberg Limits. Limited lab testing was required due to the soils encountered. Soil samples will be stored until July 2022**,** after which time they will be discarded unless other arrangements are made.

Moisture Content. The natural moisture content of all recovered samples was determined in accordance with ASTM D2216; except, due to limited sample sizes, some tests may have been performed on samples smaller than the minimum test size required by the standard. The water contents are reported on the graphic test boring logs in Attachment B.

Particle Size Distribution Tests. One particle-size distribution test was performed in accordance with ASTM D6913. The results are presented in Attachment C.

Limited Mechanical Analysis. One limited mechanical analysis was performed to supplement visual manual classification in the field. This test is performed in general accordance with ASTM D1140 but measures the percentage of the sample that classifies as gravel, sand, and fines. The result of the test is shown in Attachment C.

Atterberg Limits. One Atterberg Limits test was performed in accordance with ASTM D4318, multipoint method A. The liquid limit, plastic limit, and plasticity index numbers obtained from the test are used to classify the soil fines as silts or clays. In addition, the limits can be used to estimate strength and settlement characteristics of soils. The results of the plasticity index tests are presented on the test pit logs in Attachment B.

SITE CONDITIONS

The soil descriptions and stratigraphy contained herein, and the classifications shown on the test pit logs are the geologist's and engineer's interpretation of the field logs and the results of the laboratory soil testing.

Refer to the Test Pit Log - Descriptive Guide in Appendix B immediately following the test boring logs for a more detailed presentation on sample sizes, sample quality, frost classifications, soil types, and the soil classification procedures.

Area Topography and Development

The filtration building is planned to be constructed to the south of the existing Roughing Filters and Control buildings. The area flat area to the south of Control building currently serves as a parking area. A chain link fence separates the WTP facilities from the parking area and adjacent street. A rock slope is present to the south and east of the parking flat area. An intact bedrock ridge is visible at the surface trending approximately north south in flat parking area.

Wood Street Extension is located to the west of the site. Electric and communication utilities are present within the street. Water lines are present to the north of the chain link fence. Figure 1 presents a photograph taken from the top of the rock slope viewing northwest with the location of the test pits (labeled as TP-"No.").

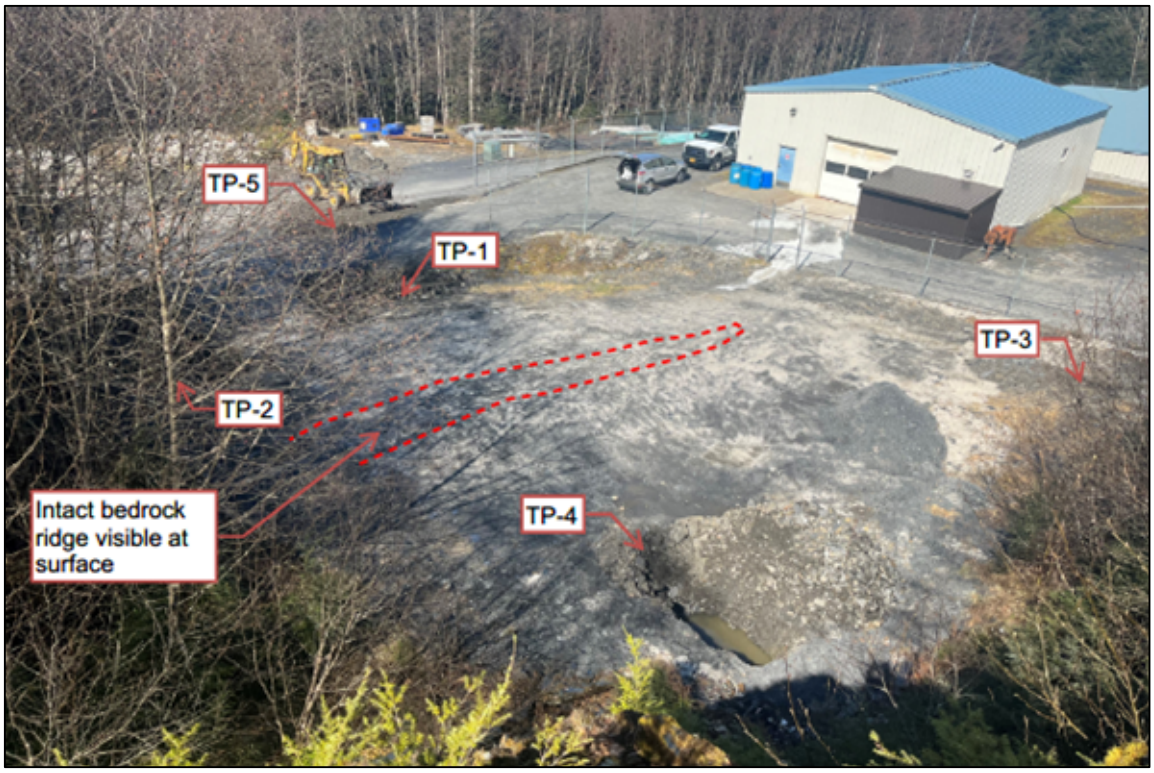

Figure 1: View northwest from top of rock slope

The rock slope to the south of the WTP is a construction slope created when rock was quarried for construction of the existing WTP, and the flat parking area is the base of rock excavation limits. The rock exposed in the slope is metasedimentary schist. The schist is gray, medium strong to strong (R3 to R4), slightly weathered to fresh, very fine to fine grained, and foliated. The rock mass fabric is tabular forming generally medium to very large blocks (8 cubic inches to greater than 6 cubic feet).

The primary discontinuity plane is the foliation. The foliation dip/dip direction is 45°/165°. Two other very low to low persistence (length less than 3 feet to 10 feet) discontinuity sets were measured at dip/dip orientations of 70°/310° and 85°/070°. Where the bedrock is undisturbed or unexcavated, overburden cover appears to be about a foot or less as the rock outcrops frequently along the undisturbed portions of the slopes to the east and south of the flat parking area.

Subsurface Conditions

The conditions observed in the test pits are consistent with the construction history of the location. The test pits within the flat parking area encountered shot rock to depth of refusal on more competent intact bedrock. The excavated shot rock contains material ranging in size from fines to boulders greater than 5 feet in width. The excavated material is generally tabular. One grain size analysis on a combined sample of 3-inch minus material collected from the excavations of Test Pit 1 and Test Pit 2 classifies the material as Poorly Graded Gravel with Silt

and Sand. However, cobbles and boulders compose between 50 to 90 percent of the excavated shot rock by volume.

Test Pit 5 was conducted in the ditch between the WTP gravel pad and Wood Street. This test pit encountered bedrock at a depth of 4 feet sloping to the west to a depth of 8 feet. Glacial till classifying as Sandy Silty Clay with Gravel was encountered along the western contact with the bedrock and may extend to the west beneath Wood Street.

Groundwater and groundwater seeps were encountered in three of the test borings ranging in depth of 3 to 8 feet below the ground surface. The groundwater in Test Pit 4 was encountered at a depth of 3 feet and may be ponded behind intact rock to the west.

ENGINEERING ANALYSIS & RECOMMENDATIONS

It is feasible to support the new structure on conventional spread footings. Rock excavation may be necessary depending on the location and elevation of the structure. The following sections discuss the projects design considerations, the observed conditions, our interpretation of the data, and foundation recommendations. These recommendations are based on engineering judgment, experience, and the data collected during the site exploration and soil laboratory tests. These recommendations are not the only design options available; there may be several acceptable alternatives. These recommendations are not intended to represent the only way, but rather to indicate one appropriate option based on the information available.

Foundations

Bearing Capacity and Settlement

The footings should be founded on a minimum of 9 inches of compacted structural fill over bedrock. The footings may be designed for a maximum allowable soil bearing pressure of 5000 pounds per square foot (psf). The minimum width of continuous strip footings should be 16 inches and the minimum width of isolated rectangular footings should be 18 inches. The allowable soil-bearing pressure may be increased by one-third for wind and seismic forces. Perimeter footings of warm buildings should be founded at least 24 inches below the adjacent exterior grade. Additionally, interior footings should be founded at least 12 inches below the lowest adjacent grade unless constrained by the floor slab. These recommendations assume the building will be continually heated during the life of the structure. Cold footings should bear on bedrock or NFS structural fill a minimum of 36 inches below adjacent exterior grade. Maximum total settlement and differential settlement are estimated to be less than 1-inch and 0.5-inch respectively.

Uplift Resistance. Uplift of shallow foundations due to wind and seismic events are resisted by the weight of the foundation and soil above the footing. Soil resistance in the shape of a truncated pyramid above the foundation should be included in design. The pyramid edges are defined by straight lines extending from the top of the footing on either side at a 2V:1H (vertical:horizontal) slope.

Floor Slab. The floor slab should be supported on a minimum of 9 inches of properly compacted structural fill. Additional fill details are presented in the structural fill section below. If

the floor covering or contents above the slab will be moisture sensitive, a vapor retarder or barrier should be placed directly beneath the floor slab using design guidelines presented in ACI 302.1R-15 (ACI 2015).

Seismic Design Criteria

Site characterization in accordance with ASCE 7-22 Site Class Definitions are based on the average properties in the top 100 feet of the soil column. It is assumed that the building will be founded on properly compacted structural fill less than 10 feet thick over bedrock. ASCE 7-22 dictates that Site Class A (Hard Rock) and Site Class B (Medium Hard Rock) can only be assigned based on measured shear wave velocity at the site. If shear wave velocity data are not available and the site condition is estimated to be a Site Class B or BC (Soft Rock) on the bases or site geology, consisting of competent rock with moderate fracturing and weathering, the site shale be classified as Site Class BC. The rock at the site was evaluated to be medium strong to strong (R3 to R3) and was observed to be lightly weathered to fresh. While limited rock is exposed at the site, the CBW rock quarry is located approximately 700 feet away and exposes approximately 100 vertical feet of the rock unit. The rock exposed in the quarry is not highly fractured, sheared, or faulted and composed of similar metasedimentary schist lithologies. It is not expected the rock would become softer or highly fractured at increasing depth at the subject site. Seismic Site Class BC is an appropriate classification.

Mapped acceleration parameters, site coefficients, and adjusted maximum considered earthquake spectral response acceleration parameters for this site have been determined using ASCE 7 Hazard Tool application which references the United States Geological Survey (USGS) Seismic Design Maps. The seismic design parameters based on ASCE 7-22, seismic Site Class BC, and an assumed Risk Category III are summarized in Table 1. The ASCE detailed report is attached in Attachment D.

Table 1: ASCE 7-22 Seismic Design Maps

S_S	0.24 g
S_{MS}	0.22 g
S_{DS}	0.14 g
S_1	0.23 g
S_{M1}	0.23 g
S_{D1}	0.15 g
Mapped MCE PGA_M	0.093 g

Seismic liquefaction, slope instability, total and differential settlement, lateral spreading, and loss of bearing capacity analyses are not required for a Site Class BC as all are unlikely to occur.

Earthwork

General Excavation. Overburden on the rock slopes consisting of vegetation and soils containing organics should be removed and are not suitable to be used as structural fill or road embankment. The existing shot rock in the flat parking area should be excavated down to competent bedrock rock and replaced with structural fill beneath the footings and slabs.

Rock Excavation. Rock excavation for the foundation footings, water utility lines, and wet well for the booster pumps is likely to be required. Some of the excavation may encounter fractured rock or shot rock from previous rock blasting, but intact rock should be expected. It is contractor's responsibility to determine the appropriate techniques for rock excavation for this application.

Rock Slopes and Rockfall. Rock excavation will be required for the existing slopes to the east and south of the planned structure. Based on characteristics observed in the existing rock slope, a finished slope angle of 1/2H:1V (horizontal:vertical) slope may be used provided that the final slope face is shot with controlled (e.g. presplit) blasting techniques which prevent overbreak and damage to the final slope surface. A minimum of 20 feet should be maintained between the toe of the slope and structures to serve as a rockfall catchment area. Rock slope mesh and/or barriers would further reduce rockfall potential or should be required if less rockfall catchment is desired. During rock excavation and after mucking, the final rock slope should be inspected by a geological engineer or engineering geologist to identify potentially unstable blocks which may require scaling or stabilization using rock dowels or rock bolts.

Temporary Cut Slopes. Temporary cut slopes for utility trenches and for foundation excavations in granular soils, fine-grained soils, and rock have been known to stand temporarily at very steep angles; however, they also have been known to fail suddenly, without warning, claiming lives. It is the responsibility of the contractor to determine appropriate temporary cut slopes or shoring for excavations and trenches for the site soils, and surface loading conditions. As a minimum, the contractor should be in full compliance with all federal, state, and local safety requirements for trenching and shoring.

Frozen Soils. Do not place fill, construct foundations, or slab-on-grade over frozen soil.

Structural Fill. Structural fill is defined as load-bearing fill placed under footings, building foundations, structural slabs, backfill of foundations, and below the pad's insulation. All structural fill should consist of non-frost susceptible (NFS) or possibly frost susceptible (PFS) gravel and contain no lumps, frozen material, organic matter, or other deleterious matter. Structural fill shall meet the following gradation requirements:

Sieve Size	Percent Finer
3”	100*
1-1/2”	70-100
3/4”	30-100
1/2”	25-100
No. 4	20-49
No. 40	0-25
No. 200	0-6
0.02mm	0-3

* The fill may contain up to 10 percent cobbles.

Other fill material, which does not meet this gradation requirement, may be acceptable for use. However, the gradation of such material should be evaluated by the project geotechnical engineer prior to its use.

Limits of Fill and Backfill. Structural fill and backfill should extend laterally from the edge of footings, slabs-on-grade, and pavements one-foot for each foot of fill beneath the footing, slab or pavement.

Utility Trench Bedding and Backfill. A suitable granular bedding material meeting the gradation requirements below or the manufacturer’s recommended gradation should be placed and compacted to a depth of at least six inches below utility lines. This bedding material should extend six inches above the top of pipe, and should be compacted to 95 percent of the maximum dry density as determined by modified Proctor, ASTM D1557. The remainder of the trench should be backfilled with structural fill. This material should be compacted in lifts not exceeding one foot in thickness to 95 percent of the maximum dry density as determined by modified Proctor, ASTM D1557.

Sieve Size	Percent Finer
1/2”	100
3/8”	80-100
No. 4	20-75
No. 8	12-60
No. 30	2-30
No. 200	0-6

Shot Rock Material Reuse. Excavated shot rock which does not meet the requirements for structural fill may be reused as embankment fill beneath the Wood Street realignment section or below other unpaved drive or parking areas. Maximum particle size shall be limited to 12 inches. Shot rock should be placed and compacted in lifts not exceeding 18 inches in loose thickness if a large vibratory compactor is used. Each rock fill layer should be spread uniformly and compacted with 5 passes of a 10+ ton vibratory roller or as approved by the engineer.

Structural Fill Placement. Structural fill should be placed and compacted in lifts not exceeding 12 inches in loose thickness if a large vibratory compactor is used, or not exceeding 6 inches in loose thickness if a hand-operated compactor is used. Each lift of structural fill should be compacted throughout its entire depth to a density of at least 95 percent of the maximum dry density as determined by modified Proctor, ASTM D1557. All excavations should be completely dewatered before placement of structural fill.

Fill Testing. Frequent, in-place density tests should be performed in each lift of fill to verify that the fill has been properly compacted prior to placing subsequent lifts. The number of tests performed in each lift should be commensurate with the size of the area worked by the contractor, the variability of the soil types used as fill, and the amount of time an inspector spends on site observing the work. At a minimum, we recommend the following inspection and testing program:

- Full-time inspection of excavation and backfill operations
- One in-place density test per 5,000 square feet, per lift, within the building footprint
- One in-place density test per 100 lineal feet at the bottom of continuous spread footings
- One in-place density test at the bottom of every other isolated rectangular spread footing
- One in-place density test per 100 lineal feet, per lift, of utility trench bedding and backfill

Dewatering and Drainage.
Based on the observed groundwater conditions, construction dewatering may be necessary on this site. It is essentially impossible to adequately place and compact structural fill if there is standing water in the excavation. Dewatering the excavations until they are properly backfilled is necessary.

Earth Pressures

Movement is needed to develop the full active or passive earth pressure states. The following sketch shows the general relationship between the earth pressure coefficients and wall movement.

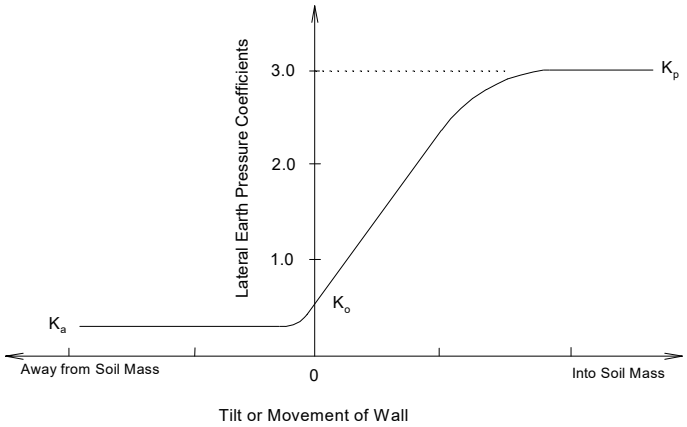

Walls with level, sand/gravel or rock backfill should be designed for the following equivalent fluid soil pressures, assumes a 36 degree friction angle and 135 pcf density:

Active Case: Cantilevered Walls

35 pcf - above the groundwater table
80 pcf - below the groundwater table
(0.002 H minimum wall deflection away from the backfill, where H - the height of the soil above the base of the wall)

At Rest Case: Basement Walls or Walls Restrained from Movement at the Top

60 pcf - above the groundwater table
90 pcf - below the groundwater table
(no wall deflection)

Passive Case: Walls Moving into the Soil, factored by 2

260 pcf - above the groundwater table
175 pcf - below the groundwater table
(.01 H minimum wall deflection toward the backfill)

Coefficient of friction between formed or precast concrete and structural fill = 0.4. The coefficient of friction for concrete cast on structural fill = 0.55.

Note: Drainage should always be provided behind retaining structures. A typical drainage system would consist of clean, free-draining gravel (protected by a geotextile) draining to a perforated subdrain and/or weep holes. The drainage system should be designed by a qualified engineer and reviewed by the project geotechnical engineer. If drainage is not provided, then the maximum possible hydrostatic pressure against the wall should be included in the structural design of the wall.

Seismic Earth Pressures. We recommend using the Mononobe-Okabe approach to determine the additional earth pressures due to earthquakes. For the assumed unit weight of the retained earth at this project (135 pcf) and the design peak horizontal ground acceleration (0.093g) was used for the horizontal coefficient, the additional horizontal force exerted on subgrade walls due to earthquakes can be determined from:

$$\Delta(P_a)_s = 3.8*H^2 \text{ (lb/ft)}$$

Observations

It is important to the performance of the planned antenna tower that any unsuitable soils are removed where specified and structural fill consists of proper materials and is adequately compacted. It is recommended that all excavation and backfill operations be observed by qualified inspection/testing personnel under the supervision of a geotechnical engineer. Frequent in-place density tests should be performed in each lift of the structural fill to verify that minimum fill densities are being attained. The inspection/testing personnel should be employed by the owner or owner's representative, not by the contractor, to avoid any inherent conflict of interest and to better ensure that the required level of quality assurance is achieved.

LIMITATIONS

DOWL based the conclusions and recommendations presented in this report, based on the assumption that site conditions are not substantially different than those exposed by the explorations. If during construction, subsurface conditions are different from those encountered in the explorations, advise DOWL at once to review those conditions and reconsider recommendations if necessary. The geotechnical recommendations provided herein are based on the premise that an adequate program of tests and observations will be conducted during construction in order to document compliance with DOWL's recommendations and to confirm conditions exposed during subgrade preparations. DOWL geotechnical personnel must review final designs to verify that recommendations provided herein have been properly implemented. If there is a substantial lapse of time between submission of this report and the start of work at the site, and especially if conditions have changed due to natural causes or construction operations at or near the site, contact DOWL to review this report and to evaluate the applicability of the conclusions and recommendations presented herein.

DOWL prepared this report for the CBW and their Consultants for use on this project. DOWL recommends you make this report available to prospective contractors for information and factual data only, but not as a warranty of subsurface conditions. DOWL prepared this report, including engineering analyses, recommendations, and figures specifically for the Wrangell Water Treatment Plant Design project. These recommendations are not applicable to other construction sites. Do not separate the figures from the text for independent use. DOWL performed these services consistent with the level of care and skill ordinarily exercised by members of the profession currently practicing in this area under similar time and budgetary constraints. No warranty is made or implied.

Any conclusions made by a construction contractor or bidder relating to construction means, methods, techniques, sequences, or costs based upon the information provided in this report are not the responsibility of DOWL.

Sincerely,
DOWL

for Paul E. Pribyl, CPG
Geologist

Sincerely,
DOWL

Jeremiah E. Holland, PE
Senior Geotechnical Engineer

STATE OF ALASKA
49TH
6-7-22
JEREMIAH ERIK HOLLAND
CE 12636
REGISTERED PROFESSIONAL ENGINEER

ATTACHMENT A

Vicinity and Test Pit Location Maps

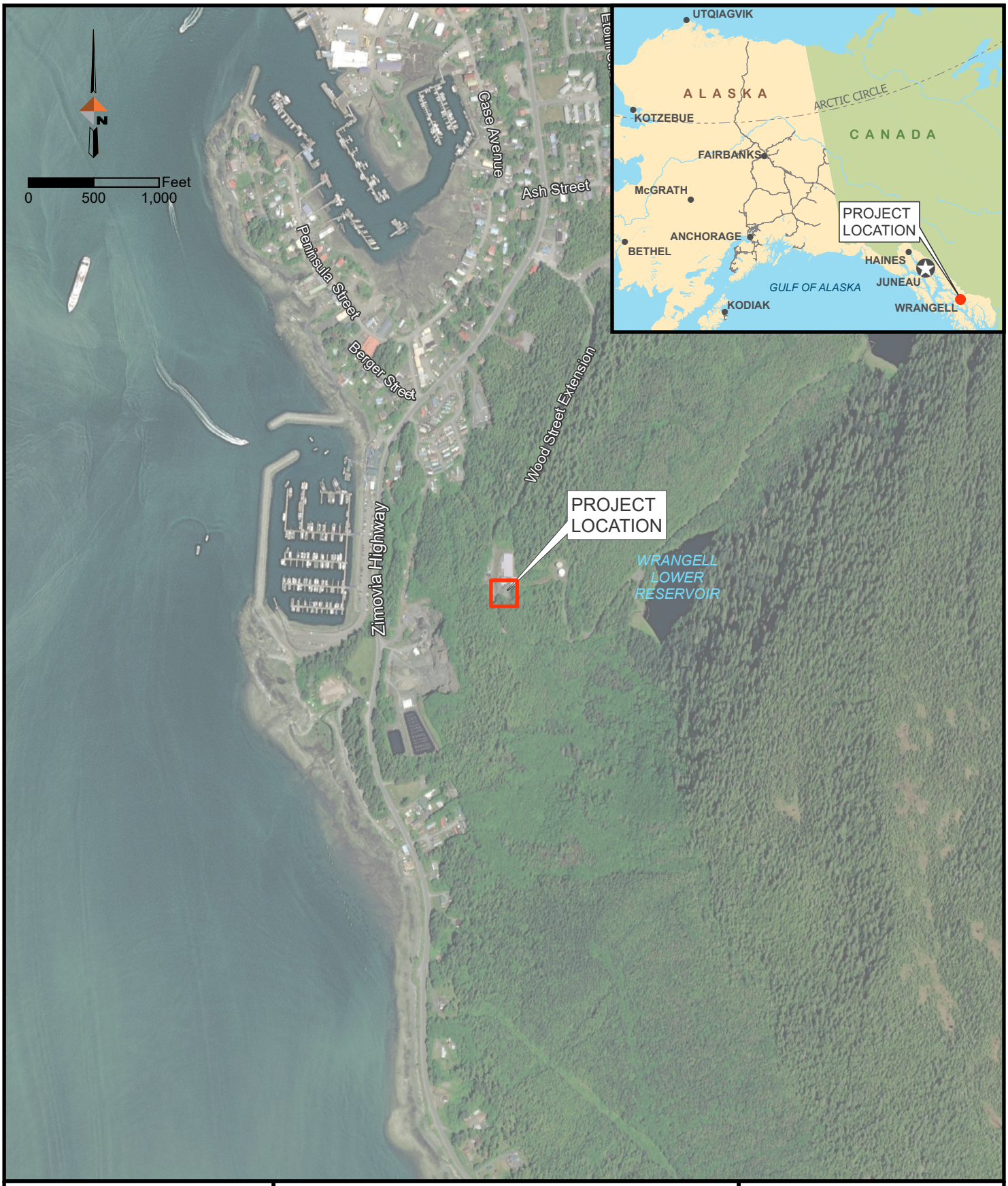

DOWL

Project Location & Vicinity

WRANGELL WATER TREATMENT PLANT

Anchorage, Alaska

PROJECT	1528.50206.01
DATE	May 18, 2022

FIGURE A-1

Service Layer Credits: World Imagery: Source: Esri, Maxar, Earthstar Geographics, and the GIS User Community
World Imagery: Maxar (Municipality of Anchorage)

DOWL

Test Pit Location

WRANGELL WATER TREATMENT PLANT

Anchorage, Alaska

PROJECT	1528.50206.01
DATE	May 18, 2022

FIGURE A-2

Service Layer Credits: World Imagery: Source: Esri, Maxar, Earthstar Geographics, and the GIS User Community (Municipality of Anchorage)

ATTACHMENT B

Test Pit Logs and Descriptive Guide

TEST PIT 1

LOCATION: SEE TEST PIT LOCATION MAP
ELEVATION:
SURFACE: Gravel

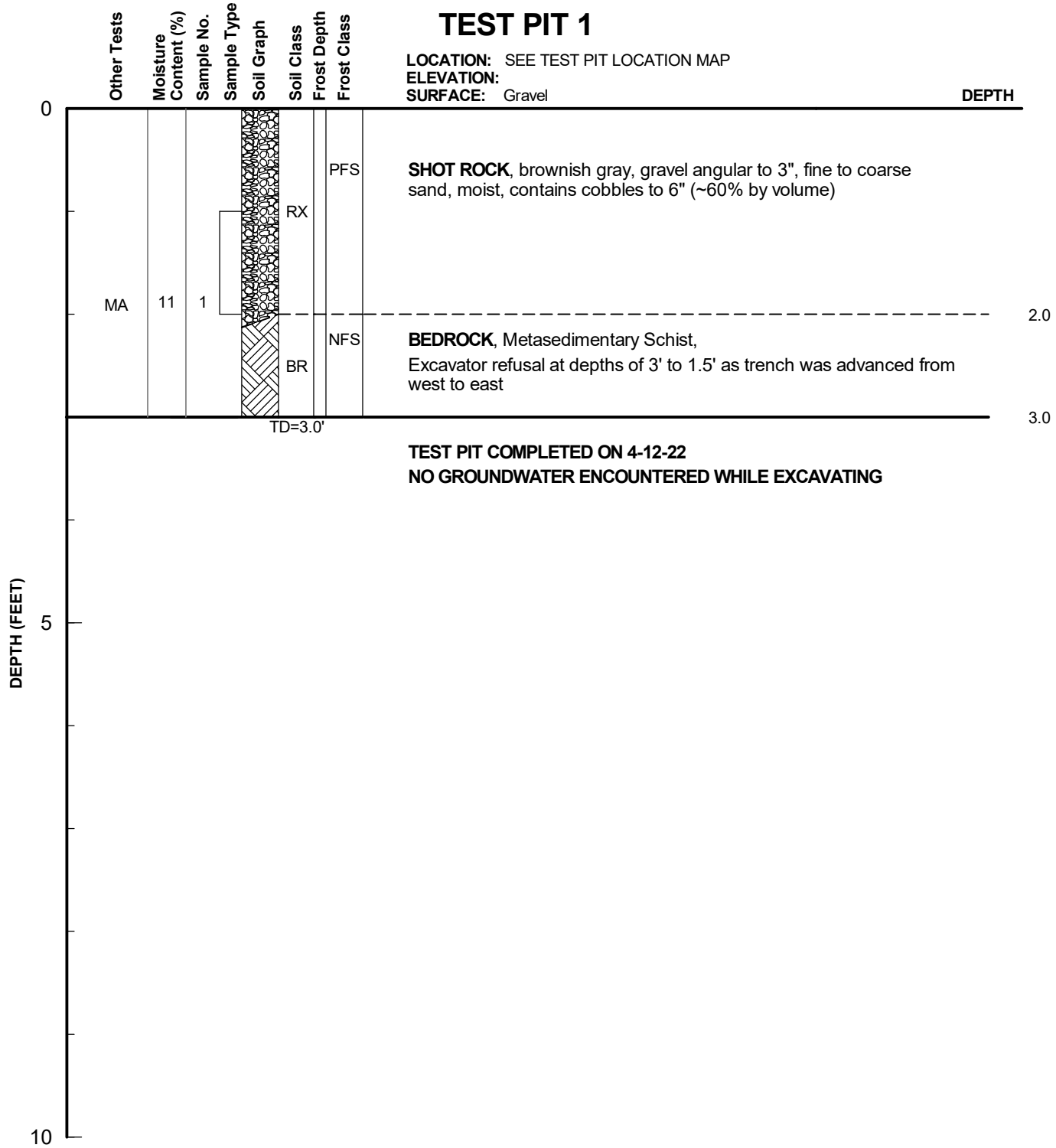

SHOT ROCK, brownish gray, gravel angular to 3", fine to coarse sand, moist, contains cobbles to 6" (~60% by volume)

BEDROCK, Metasedimentary Schist,
Excavator refusal at depths of 3' to 1.5' as trench was advanced from west to east

TEST PIT COMPLETED ON 4-12-22
NO GROUNDWATER ENCOUNTERED WHILE EXCAVATING

KEY
MA = Mechanical Analysis
TD = Total Depth
□ = Grab Sample
◪ = SPT Sample
▨ = Shelby Tube - pushed
⊟ = Direct Push Sample
⊠ = 2.5" I.D. Spoon Sample
340# weight, 30" fall

EXCAVATOR: CBW Public Works
EQUIPMENT: CAT 4100DT
OPERATOR: Jeff Rooney
METHOD: Backhoe

CLIENT: City of Wrangell
PROJECT: Water Treatment Plant Design
LOGGED BY: Paul Pribyl, CPG
TEST PIT COMPLETED: 4-12-22
W.O. 1528.50206.01

DOWL

LOG OF TEST PIT 1

FIGURE B-1

LOG OF EXPLORATION 50206.GPJ BLANK2.GDT 5/18/22

TEST PIT 2

LOCATION: SEE TEST PIT LOCATION MAP
ELEVATION:
SURFACE: Grass

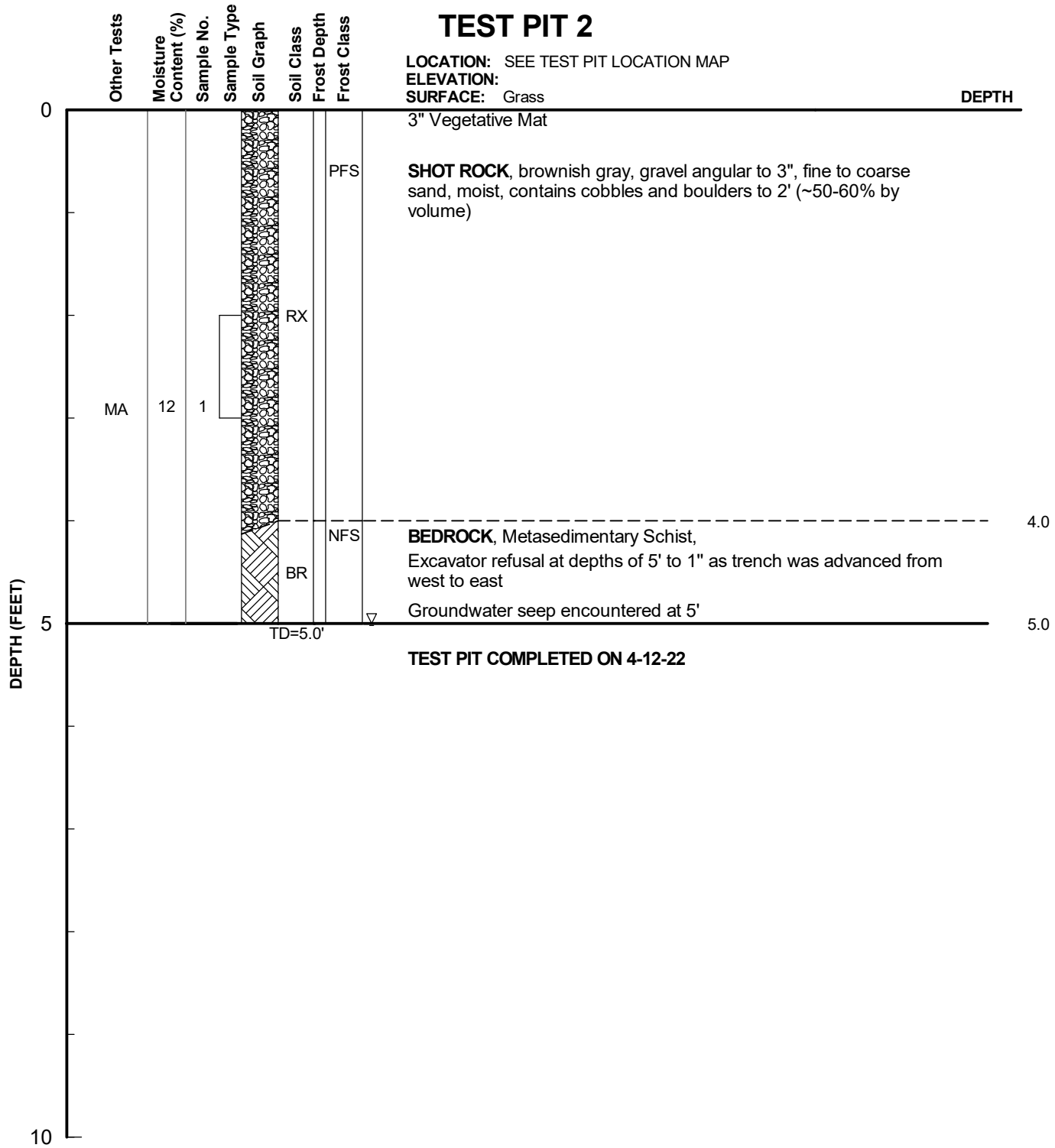

KEY
MA = Mechanical Analysis
TD = Total Depth
□ = Grab Sample
◪ = SPT Sample
▨ = Shelby Tube - pushed
⊟ = Direct Push Sample
⊠ = 2.5" I.D. Spoon Sample
340# weight, 30" fall

EXCAVATOR: CBW Public Works
EQUIPMENT: CAT 4100DT
OPERATOR: Jeff Rooney
METHOD: Backhoe

CLIENT: City of Wrangell
PROJECT: Water Treatment Plant Design
LOGGED BY: Paul Pribyl, CPG
TEST PIT COMPLETED: 4-12-22
W.O. 1528.50206.01

LOG OF EXPLORATION 50206.GPJ BLANK2.GDT 5/18/22

DOWL

LOG OF TEST PIT 2

FIGURE B-2

TEST PIT 3

LOCATION: SEE TEST PIT LOCATION MAP
ELEVATION:
SURFACE: Gravel

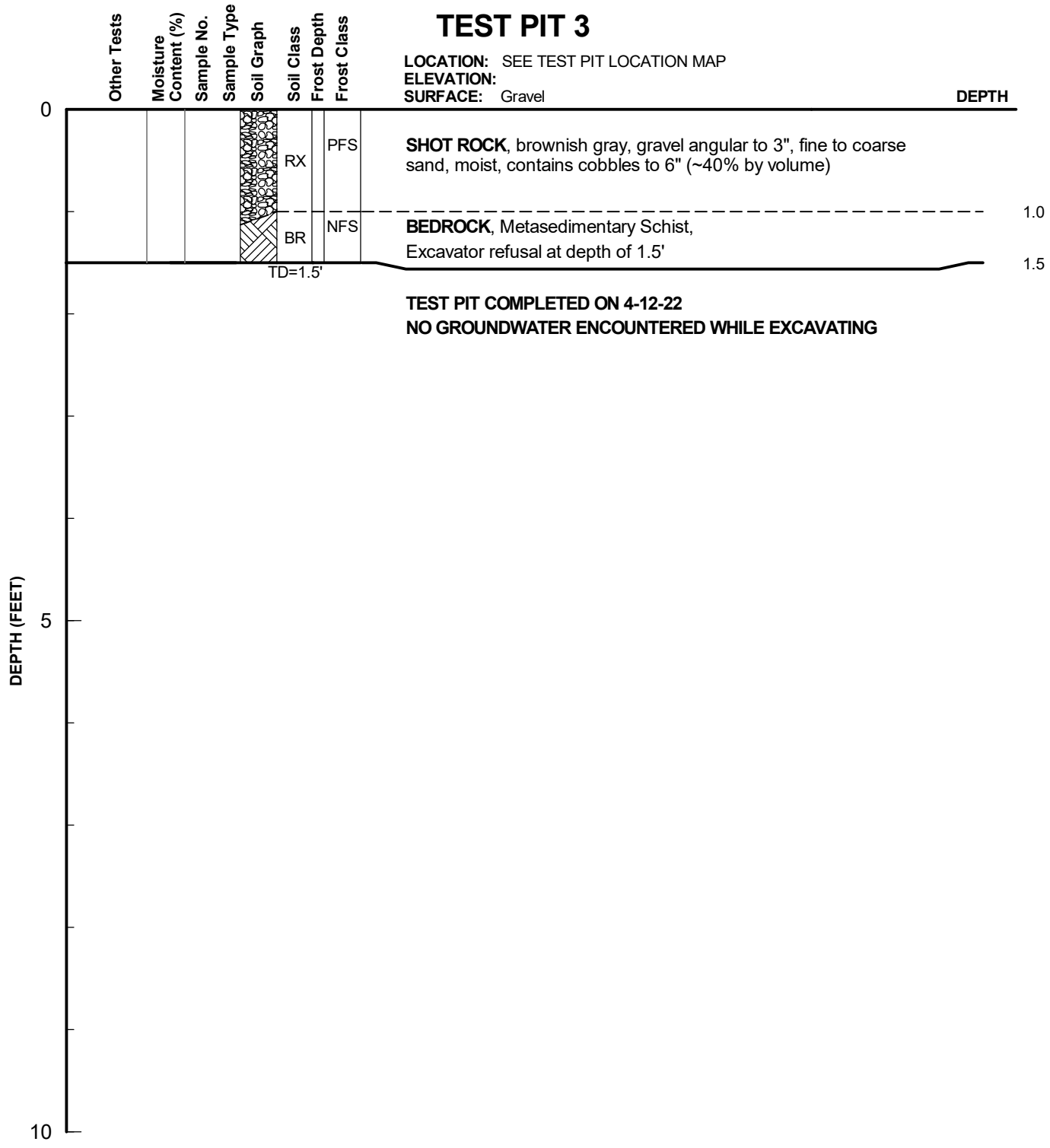

KEY
TD = Total Depth
□ = Grab Sample
◪ = SPT Sample
▨ = Shelby Tube - pushed
⊟ = Direct Push Sample
⊠ = 2.5" I.D. Spoon Sample
340# weight, 30" fall

EXCAVATOR: CBW Public Works
EQUIPMENT: CAT 4100DT
OPERATOR: Jeff Rooney
METHOD: Backhoe

CLIENT: City of Wrangell
PROJECT: Water Treatment Plant Design
LOGGED BY: Paul Pribyl, CPG
TEST PIT COMPLETED: 4-12-22
W.O. 1528.50206.01

DOWL

LOG OF TEST PIT 3

FIGURE B-3

LOG OF EXPLORATION 50206.GPJ BLANK2.GDT 5/18/22

TEST PIT 4

LOCATION: SEE TEST PIT LOCATION MAP
ELEVATION:
SURFACE: Gravel

Other Tests	Moisture Content (%)	Sample No.	Sample Type	Soil Graph	Soil Class	Frost Depth	Frost Class

DEPTH

0

PFS — **SHOT ROCK**, brownish gray, primarly tabulary cobbles to 8" (~90% by volume)

RX

Groundwater encountered at 3' while excavating; interpretted to be ponded by intact bedrock to the west

DEPTH (FEET)

5

5.0

NFS — **BEDROCK**, Metasedimentary Schist, Excavator refusal at depth of ~6'

BR

6.0

TD=6.0'

TEST PIT COMPLETED ON 4-12-22

10

KEY
TD = Total Depth
□ = Grab Sample
◪ = SPT Sample
▨ = Shelby Tube - pushed
⊟ = Direct Push Sample
⊠ = 2.5" I.D. Spoon Sample
340# weight, 30" fall

EXCAVATOR: CBW Public Works
EQUIPMENT: CAT 4100DT
OPERATOR: Jeff Rooney
METHOD: Backhoe

CLIENT: City of Wrangell
PROJECT: Water Treatment Plant Design
LOGGED BY: Paul Pribyl, CPG
TEST PIT COMPLETED: 4-12-22
W.O. 1528.50206.01

LOG OF EXPLORATION 50206.GPJ BLANK2.GDT 5/18/22

DOWL

LOG OF TEST PIT 4

FIGURE B-4

TEST PIT 5

LOCATION: SEE TEST PIT LOCATION MAP
ELEVATION:
SURFACE: Gravel Ditch

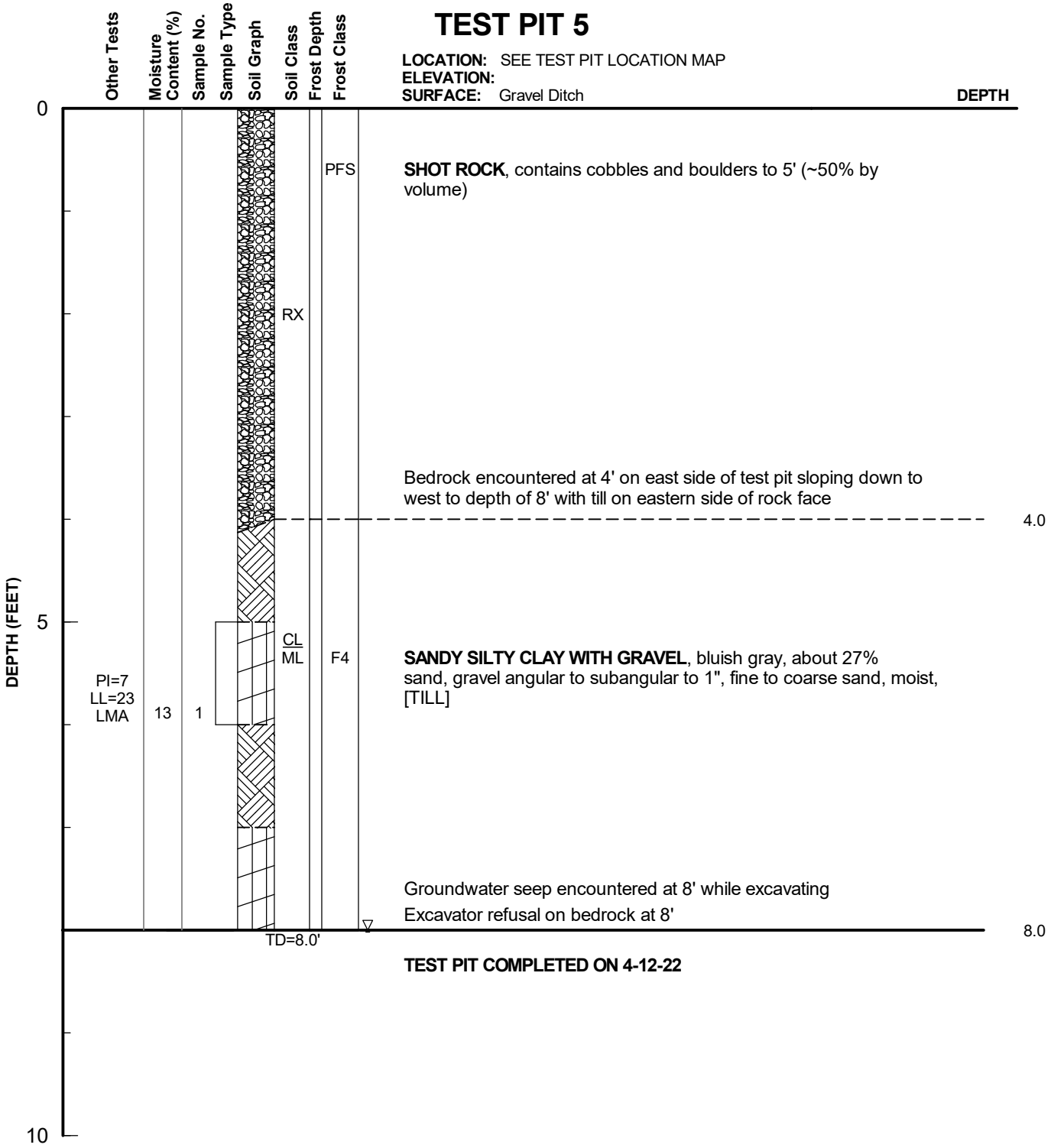

SHOT ROCK, contains cobbles and boulders to 5' (~50% by volume)

Bedrock encountered at 4' on east side of test pit sloping down to west to depth of 8' with till on eastern side of rock face

SANDY SILTY CLAY WITH GRAVEL, bluish gray, about 27% sand, gravel angular to subangular to 1", fine to coarse sand, moist, [TILL]

Groundwater seep encountered at 8' while excavating

Excavator refusal on bedrock at 8'

TEST PIT COMPLETED ON 4-12-22

KEY
PI = Plasticity Index
LL = Liquid Limit
LMA = Limited Mechanical Analysis
TD = Total Depth
□ = Grab Sample
◪ = SPT Sample
▨ = Shelby Tube - pushed
⊟ = Direct Push Sample
⊠ = 2.5" I.D. Spoon Sample
340# weight, 30" fall

EXCAVATOR: CBW Public Works
EQUIPMENT: CAT 4100DT
OPERATOR: Jeff Rooney
METHOD: Backhoe

CLIENT: City of Wrangell
PROJECT: Water Treatment Plant Design
LOGGED BY: Paul Pribyl, CPG
TEST PIT COMPLETED: 4-12-22
W.O. 1528.50206.01

DOWL

LOG OF TEST PIT 5

FIGURE B-5

LOG OF EXPLORATION 50206.GPJ BLANK2.GDT 5/18/22

TEST PIT LOG – DESCRIPTIVE GUIDE

Soil Descriptions – The soil classified visually in the field based on drill action, auger cuttings, and sample information. The recovered soil samples are classified visually again in the laboratory. The soil description on the on the pit log is based on an interpretation of the field and laboratory visual classifications, along with the results of the laboratory testing which may have been performed.

The **soil classification** is based on ASTM Designation D2487 "Standard Test method for Classification of Soils for Engineering Purposes" and ASTM D 2488 "Standard Practice for Description and Identification of Soils (Visual – Manual Procedure)". The soil frost classification is based on the system developed by the U.S. Army Corps of Engineers and is performed in accordance with the Departments of the Army and Air Force Publication TM 5-822-5 "Pavement Design for Roads, Streets, Walks, and Open Storage Areas". Outlines of these classification procedures are presented on the following pages.

The soil color is the subjective interpretation of the individual logging the test pit.

Plasticity Indices - The plasticity of the minus No. 40 fraction of the soil is described and the fine-grained soils are identified from manual tests using the following tables as a guide:

Soil Symbol	Dry Strength	Dilatancy	Toughness
ML	none to low	slow to rapid	low or thread cannot be formed
CL	medium to high	none to slow	medium
MH	low to medium	none to slow	low to medium
CH	high to very high	none	high

Plasticity Description	Criteria
Non Plastic	A 1/8" (3.2mm) thread cannot be rolled at any water content
Low	A thread can barely be rolled and the lump cannot be formed when drier than the plastic limit
Medium	The thread is easy to roll and not much time is required to reach the plastic limit. The thread cannot be rerolled after reaching the plastic limit. The lump crumbles when drier than the plastic limit.
High	It takes considerable time rolling and kneading to reach the plastic limit. The thread can be rerolled several times after reaching the plastic limit. The lump can be formed without crumbling when drier than the plastic limit.

Laboratory Atterberg Limits tests are usually performed on a few of the plastic soils and results are reported on the test pit log. These laboratory tests are performed in accordance with ASTM D4318 "Standard Test Method for Liquid Limit, Plastic Limit, and Plasticity Index of Soils."

Gravel Shape – The shape of the gravel particles is described based on this guide:

Angular: Particles have sharp edges and relatively plane sides with unpolished surfaces.
Subangular: Particles are similar to angular but have somewhat rounded edges.
Subrounded: Particles exhibit nearly plane sides but have well-rounded corners and edges.
Rounded: Particles have smoothly curved sides and no edges.

Material Size – The maximum nominal size of gravel and predominate percentage of sand particles are described using the following table:

Description	Gravel	Sand
Coarse	Passes 3” (75 mm) sieve, retained on ¾” (19 mm) sieve)	Passes No. 4 sieve, retained on No. 10 sieve
Medium	N/A	Passes No. 10 sieve, retained on No. 40 sieve
Fine	Passes ¾” (19 mm) sieve, retained on No. 4 sieve	Passes No. 40 sieve, retained on No. 200 sieve

Soil Moisture – The soils moisture is described as:

Dry:	Powdery, dusty, no visible moisture
Moist:	Enough moisture to affect the color of the soil; damp
Moist to Wet:	Water in pores but not dripping; capillary zone above water table
Wet:	Dripping wet, contains significant free water, or sampled below water table

Field Density Estimates – The subject estimate of the density of coarse-grained soils is based on the observed drill action and on drive sample data. The guide below is used with the Standard Penetration Test (SPT) for sands with minor amounts of fine gravel; however blow counts can be affected strongly by gravel content, thermal state, drilling procedures, condition of equipment, and performance of the test.

Standard Penetration Resistance N (blows/foot)	Relative Soil Density
0 - 4	Very loose
5 - 10	Loose
11 - 30	Medium dense
31 - 50	Dense
More than 50	Very Dense

An estimate of the consistency of fine-grained soils is based on the observed drill action and on drive sample data. The guide below is used:

Standard Penetration Resistance N (blows/foot)	Relative Soil Density
0 - 2	Very soft
3 - 4	Soft
5 - 8	Firm
9 - 15	Stiff
16 - 30	Very Stiff
More than 30	Hard

Soil Layer Boundaries – Generally, there is a gradual transition from one soil type to another in a natural soil deposit, and it is difficult to determine accurately the boundaries of the soil layers.

- A *solid diagonal line* between soil layers on the graphic pit log indicates the general region of transition from one soil layer to another.
- A *dashed diagonal line* indicates the soil boundary was detected only by a change in the recovered samples and the actual boundary may be anywhere between the indicated sample depths.
- A soil *horizontal line* between soil layers indicates a relatively distinct transition between soil types was observed in the recovered samples and/or by a distinct change in drill action

Sample Interval – The sample interval is shown graphically on the test pit log and generally is accurate to about 0.5-foot.

Frost Depth and Soil Temperatures – If frozen ground is encountered during drilling, the interval of frozen soil is shown graphically on the test pit log. Generally, the temperature of a few soil samples is measured and shown on the pit log. These sample temperatures only give a qualitative indication of in situ soil temperatures. The temperature of samples can be influenced significantly by ambient air temperature and friction during drilling and sampling. Greater confidence is given to temperatures obtained through thermistors installations.

Soil Moisture Content - Generally, laboratory soil moisture content tests are performed on all recovered samples. Only about 30 grams of minus No.4 material is typically used for the moisture content test, so results reported on the log may not reflect accurately the *in situ* moisture content of gravelly soils.

Soil Density/Unit Weight – The soil density shown on the test pit logs generally is determined by measuring the wet weight, moisture content, and physical dimensions of relatively undisturbed specimens.

Groundwater – The depth to groundwater observed during drilling is generally shown on the test pit log. Alternatively, depth to groundwater can be measured in a perforated PVC pipe installed in the pit to monitor groundwater level. Differences can occur between depth to groundwater during drilling and those measured after drilling due to the time needed to equalize the groundwater elevation during and after drilling.

Grab Samples – Grab samples are obtained from the auger flights. The sample depth and interval indicated on the test pit log should be considered a rough approximation. The grab samples may not be representative of in situ soils, particularly in layer soil deposits.

CLASSIFICATION OF SOILS FOR ENGINEERING PURPOSES
ASTM DESIGNATION: D2487

Based on the Unified Soil Classification System (USCS)

		Criteria for Assigning Group Symbols and Group Names Using Laboratory Tests [A]		USCS Soil Classification	
				Group Symbol	Group Name [B]
Coarse-Grained Soils	Gravels	Clean Gravels	$Cu \geq 4$ and $1 \geq Cc \leq 3$ [E]	GW	Well-graded gravel
		Less than 5% fines [C]	$Cu < 4$ and/or $1 \leq Cc \leq 3$ [E]	GP	Poorly graded gravel
	More than 50% of coarse fraction retained on #4 sieve	Gravel with Fines	Fines classify as ML or MH	GM	Silty gravel [F,G,H]
		More than 12% fines [C]	Fines classify as CL or CH	GC	Clayey gravel [F,G,H]
More than 50% retained on #200 sieve	Sands	Clean Sands	$Cu \geq 6$ and $1 \geq Cc \leq 3$ [E]	SW	Well-graded sand [I]
		Less than 5% fines [D]	Cu 6 4 and/or $1 \leq Cc \leq 3$ [E]	SP	Poorly graded sand [I]
	50% or more of coarse fraction passes #4 sieve	Sands with Fines	Fines classify as ML or MH	SM	Silty sand [G,H,I]
		More than 12% fines [D]	Fines classify as CL or CH	SC	Clayey sand [G,H,I]
Fine-Grained Soils	Silts and Clays	Inorganic	PI > 7 and plots on or above "A" line [J]	CL	Lean clay [K,L,M]
	Liquid limit less than 50		PI < 4 and plots on or above "A" line [J]	ML	Silt [K,L,M]
		Organic	Liquid limit - oven dried < 0.75	OL	Organic clay [K,L,M,N]
			Liquid limit - not dried	OL	Organic silt [K,L,M,O]
50% or more passes the #200 sieve	Silt and Clays	Inorganic	PI plots on or above "A" line	CH	Fat clay [K,L,M]
	Liquid limit 50 or more		PI plots below "A" line	MH	Elastic silt [K,L,M]
		Organic	Liquid limit - oven dried > 0.75	OH	Organic clay [K,L,M,P]
			Liquid limit - not dried	OH	Organic clay [K,L,M,Q]
High Organic Soils		Primarily organic matter	dark in color, and organic odor	PT	Peat

A Based on material passing the 3-in sieve

B If field sample contained cobbles or boulders, or both, add "with cobbles or boulders or both" to group name

C Gravels with 5 to 12% require dual symbols:
GW-GM well-graded gravel with silt
GW-GC well-graded gravel with clay
GP GM poorly-graded gravel with silt
GP-GC poorly graded gravel with clay

D Sands with 5 to 12% require dual symbols:
SW-SM well-graded sand with silt
SW-SC well-graded sand with clay
SP-SM poorly graded sand with silt
SP-SC poorly graded sand with clay

E $Cu=D_{60}/D_{10}$ $Cc = [(D_{30})^2/(D_{10}xD_{60})]$

F If fines classify as CL-ML, use dual symbol GC-GM, SC-SM

G If soil contains ≥ 15% sand, add "with sand to group name

H If fines are organic, add " with organic fines" to group name

I If soil contains ≥ 15% gravel, add "with gravel" to group name

J If Atterberg Limits plot in hatched area, soil is CL-ML, silty clay

K If soil contains 15 to 29% plus No. 200, add "with sand" or "with gravel", whichever is predominant.

L If soil contains ≥ 30% plus No. 200, predominantly sand, add "sandy" to group name.

M If soil contains ≥ 30% plus No. 200, predominantly gravel, add "gravelly" to group name.

N PI ≥ 4 or plots below "A" line

O PI< 4 or plots below "A" line

P PI plots on or above "A" line

Q PI plots below A line

DESCRIPTION OF FROZEN SOILS (Visual-Manual Procedure) ASTM Designation: D4083

Part I Description of Soil Phase	Classify Soil Phase by ASTM D2487 or D2488					
		Group Symbol	Subgroup			Field Identification
			Description	Symbol		
Part II Description of Frozen Soil	Segregated ice is not visible by eye	N	Poorly bonded or friable	Nf		Identify by visual examination to determine presence of excess ice, use procedures under Note 2 and hand magnifying lens as necessary. For soils not fully saturated, estimate degree of ice saturation; medium, low. Note presence of crystals or ice coatings around larger particles. (Note 1)
			No excess ice	Nb	Nbn	
			Well-bonded Excess ice	Nb	Nbe	
	Segregated ice is visible by eye (ice 1-inc or less in thickness)	V	Individual ice crystal or inclusions	Vx		For ice phase, record the following when applicable: Location, Structure, Orientation, Color, Thickness, Size, Length, Shape, Spacing, Hardness, Pattern of arrangement Estimate volume of visible segregated ice present as percentage of total sample volume. (Note 2)
			Ice coatings on particles	Vc		
			Random or irregularly oriented ice formations	Vr		
			Stratified or distinctly oriented ice formations	Vs		
			Uniformly distributed ice	Vu		
Part III Description of Substantial Ice	Ice (greater than 1-inh in thickness)	ICE	Ice with soil inclusions	ICE+Soil Type		Designate material as ICE (Note 3) and use descriptive terms as follows, usually one item from each group where applicable: HARDNESS: Hard, Soft (of mass, not individual crystals) STRUCTURE (Note 4): Clear, Cloudy, Porous, Candled, Granular, Stratified COLOR: Colorless, Gray, Blue ADMIXTURES: Contains few thin silt inclusions
			Ice without soil inclusions	ICE		

Note 1: Frozen soils in the N group may, on close examination, indicate presence of ice within the voids of the material by crystalline reflections or by a sheen on fractured or trimmed surfaces. The impression received by the unaided eye, however, is that none of the frozen water occupies space in excess of the original voids in the soils. The opposite is true of frozen soils in the V group

Note 2: When visual methods may be inadequate, a simple field test to aid evaluation of the volume of excess ice can be made by placing some frozen soil in a small jay, allowing it to melt, and observing the quantity of supernatant water as a percentage of total volume

Note 3: Where special forms of ice such as hoarfrost can be distinguished, more explicit description should be given

Note 4: Observer should be careful to avoid being misled by surface scratches or frost coating on the ice.

DEFINITIONS

1) Ice coatings on particles - discernible layers of ice found on or below larger soils particles in a frozen soil mass.
2) Ice Crystal - a very small individual ice particle visible in the face of a soil mass. Crystals may be present alone or in combination with other ice formations.
3) Clear Ice - ice that is transparent and contains only a moderate number of air bubbles.
4) Cloudy Ice - ice that is translucent or relatively opaque due to the content of air or other reasons, but which is essentially sound and impervious
5) Porous Ice - ice that contains numerous voids, usually interconnected and usually resulting from melting at air bubbles or along crystal interfaces from presence of salt or other materials in the water or from the freezing of saturated snow. Though porous, the mass retains its structural unity.
6) Candled Ice - ice that has rotted or otherwise formed into long columnar crystals, very loosely bonded together
7) Granular Ice - ice that is composed of coarse, more or less equidimensional crystals weakly bonded together
8) Ice Lenses - lenticular ice formations in soil occurring essentially parallel to each other, generally normal to the direction of heat loss, and commonly in repeated layers.
9) Ice Segregation - the growth of ice within soil in excess of the amount that may be produced by the in-place conversion of the original void moisture to ice. Ice segregation occurs most often as distinct lenses, layers, veins, and masses, commonly, but not always, oriented normal to the direction of heat loss.
10) Well-Bonded - a condition in which the soil particles are strongly held together by the ice so that the frozen soil possesses relatively high resistance to chipping or breaking.
11) Poorly-Bonded - a condition in which the soil particles are weakly held together by the ice so that the frozen soil has poor resistance to chipping and breaking.
12) Thaw Stable - the characteristics of frozen soils that, upon thawing, do not show loss of strength in comparison to normal, long-time thawed values nor produce detrimental settlement.

FROST DESIGN SOIL CLASSIFICATION[1]

Frost[2] Group	Kind of Soil	Percentage Finer than 0.02 mm by Weight	Typical Soil Types Under Unified Soil Classification
NFS[3]	(a) Gravels Crushed stone Crushed rock	0 to 1.5	GW and GP
	(b) Sands	0 to 3	SW and SP
PFS[4] (MOA NFS)	(a) Gravels Crushed stone Crushed rock	1.5 to 3	GW and GP
(MOA F2)	(b) Sands	3 to 10	SW and SP
S1 (MOA F1)	Gravelly soils	3 to 6	GW, GP, GW-GM, and GP-GM
S2 (MOA F2)	Sandy soils	3 to 6	SW, SP, SW-SM, and SP-SM
F1	Gravelly soils	6 to 10	GM, GW-GM, and GP-GM
F2	(a) Gravelly soils	10 to 20	GM, GW-GM, and GP-GM
	(b) Sands	6 to 15	SM, SW-SM, and SP-SM
F3	(a) Gravelly soils	Over 20	GM and GC
	(b) Sands, except very fine silty sands	Over 15	SM and SC
	(c) Clays, PI>12		CL and CH
F4	(a) All silts		ML and MH
	(b) Very fine silty sands	Over 15	SM
	(c) Clays, PI<12		CL and CL-ML
	(d) Varved clays and other fine-grained, banded sediments		CL and ML CL, ML, and SM CL, CH, and ML CL, CH, ML and SM

1 Departments of the Army and Air Force Publication TM 5-822-5/AFM 88-7, "Pavement Design for Roads, Streets, Walks, and Open Storage Areas", Table 18-2.

2 Corps of Engineers Frost groups directly correspond to the Municipality of Anchorage soil frost classification groups, except as noted.

3 Non Frost-Susceptible.

4 Possibly frost-susceptible, but requires laboratory test to determine frost design soil classification.

ATTACHMENT C

Laboratory Test Results

Alaska Testlab - Anchorage
4040 B Street, Suite 102
Anchorage, AK 99503
Phone: 907-205-1987
Fax: 907-782-4409
info@alaskatestlab.com

Material Test Report

Report No: ASM:22-0740
Issue No: 1

Client: DOWL, LLC
4041 B Street
Anchorage, AK, 99503

Project Code: 220509

CC: DOWL
Maria Kampsen

Project: Wrangell Water Treatment Plant

1128.50206.01

The results contained below pertain only to the items tested below. This report should not be reproduced, except in full, without the prior written approval of Alaska Testlab or the agency.

Reviewed By: Maria E Kampsen
Title: Senior Engineer
Date: 5/12/2022

Sample Details

Sample ID	22-0740-S01	22-0740-S02	22-0740-S03	22-0740-S04
Client Sample ID	TP-1 Sa1	TP-2 Sa1	Combined TP-1 & 2	TP-5 Sa1
Date Sampled				

Other Test Results

Description	Method	Results			Limits
Water Content (%)	ASTM D2216	11	12	13	
Date Tested		5/2/2022	5/2/2022	5/2/2022	
Tested By		Cindy Zickefoose	Cindy Zickefoose	Cindy Zickefoose	
Group Code	ASTM D2487		GP-GM		
Group Name			Poorly graded gravel with silt and sand		
Atterberg Limits Estimated			Yes		
Tested By			John Platt		
Method	ASTM D6913		A		
Preparation Method			Oven Dry		
Composite Sieving?			Yes		
Separating Sieve(s)			No. 4		
Cu	ASTM D2487		130.39		
Cc			0.67		
Liquid Limit	ASTM D4318			23	
Plastic Limit				16	
Plasticity Index				7	
Preparation Method				Air Dry	
Oversize Removed By				Dry Sieving over No. 40 sieve	
Liquid Limit Apparatus				Mechanical	
Grooving Tool				Plastic	
Rolling				Hand	
Tested By				Karen Jackson	
Date Tested				5/10/2022	
Percent Gravel	LMA (Internal Method)			23	
Percent Sand				28	
Percent Fines (Silt/Clay)				49	
Group Symbol				SC-SM	
Group Name				Silty, clayey sand with gravel	
Tested By				John Platt	

Comments

N/A

© 2000-2022 QESTLab by SpectraQEST.com

Alaska Testlab - Anchorage
4040 B Street, Suite 102
Anchorage, AK 99503
Phone: 907-205-1987
Fax: 907-782-4409
info@alaskatestlab.com

Material Test Report

Report No: MAT:22-0740-S03
Issue No: 1

The results contained below pertain only to the items tested below. This report should not be reproduced, except in full, without the prior written approval of Alaska Testlab or the agency.

Client: DOWL, LLC
4041 B Street
Anchorage, AK, 99503

Project Code: 220509

CC: DOWL
Maria Kampsen

Project: Wrangell Water Treatment Plant

1128.50206.01

Reviewed By: Maria E Kampsen
Title: Senior Engineer
Date: 5/12/2022

Sample Details

Sample ID	22-0740-S03
Client Sample ID	Combined TP-1 & 2
General Location	3" Minus only

Other Test Results

Description	Method	Result	Limits
Group Code	ASTM D2487	GP-GM	
Group Name	Poorly graded gravel with silt and sand		
Atterberg Limits Estimated		Yes	
Tested By		John Platt	
Date Tested		5/9/2022	
Method	ASTM D6913	A	
Preparation Method		Oven Dry	
Composite Sieving?		Yes	
Separating Sieve(s)		No. 4	
Cu	ASTM D2487	130.39	
Cc		0.67	
Date Tested		5/9/2022	

Particle Size Distribution

Method: ASTM D6913
Drying By: Oven
Date Tested: 5/9/2022
Tested By: John Platt

Sieve Size	% Passing	Limits
3in	100	
2in	96	
1½in	86	
1in	75	
¾in	69	
½in	60	
3/8in	56	
No.4	47.0	
No.10	39	
No.20	29	
No.40	22	
No.60	17	
No.100	13	
No.200	9	

Chart

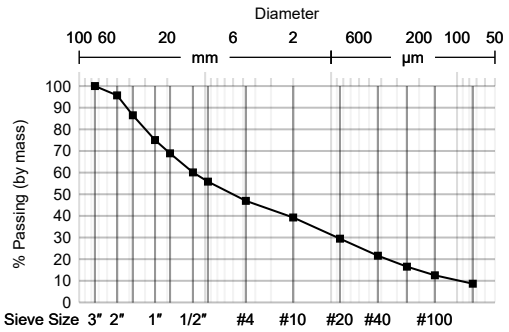

Comments

Soil Classification of Fines (-#200) in Sieve Analyses Assumed Unless Verified by Additional Testing
No Plasticity Index Test Performed

© 2000-2022 QESTLab by SpectraQEST.com

ATTACHMENT D

Seismic Design Criteria

ASCE 7 Hazards Report

Address:
No Address at This Location

Standard:	ASCE/SEI 7-22	**Elevation:**	255.7 ft (NAVD 88)
Risk Category:	III	**Latitude:**	56.455981
Soil Class:	BC	**Longitude:**	-132.37652

Seismic

Site Soil Class:

Results:

PGA_M :	0.093	T_L :	12
S_{MS} :	0.22	S_S :	0.24
S_{M1} :	0.23	S_1 :	0.23
S_{DS} :	0.14	S_{DC} :	
S_{D1} :	0.15	V_{S30} :	760

Multi-Period MCE_R Spectrum

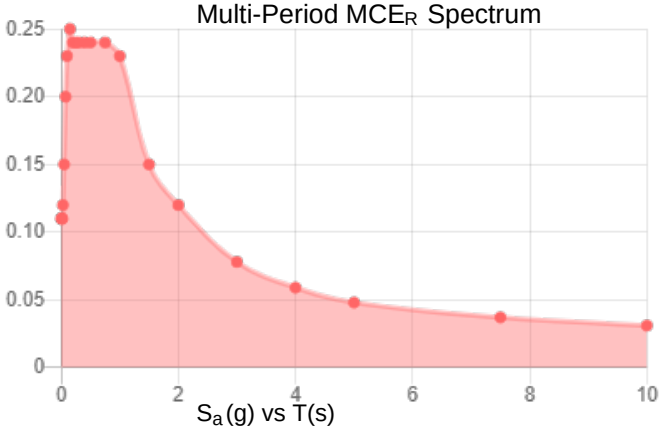

Multi-Period Design Spectrum

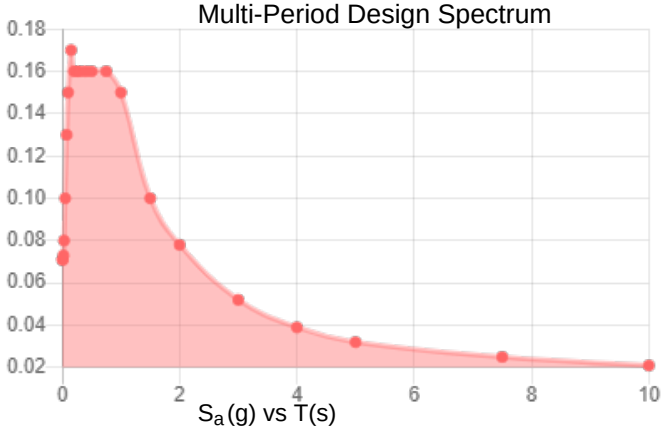

Two-Period MCE_R Spectrum

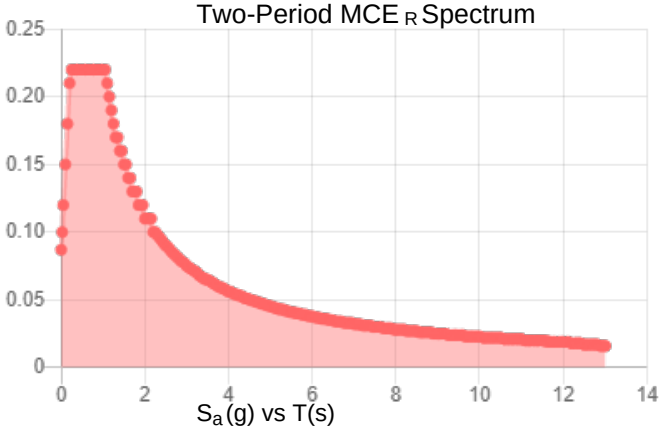

Two-Period Design Spectrum

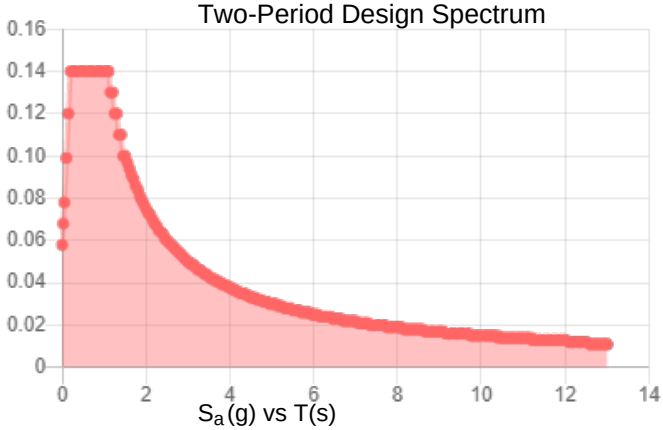

MCE_R Vertical Response Spectrum

Vertical ground motion data has not yet been made available by USGS.

Design Vertical Response Spectrum

Vertical ground motion data has not yet been made available by USGS.

Data Accessed: Thu May 19 2022

Date Source:
USGS Seismic Design Maps based on ASCE/SEI 7-22 and ASCE/SEI 7-22 Table 1.5-2. Additional data for site-specific ground motion procedures in accordance with ASCE/SEI 7-22 Ch. 21 are available from USGS.

The ASCE 7 Hazard Tool is provided for your convenience, for informational purposes only, and is provided "as is" and without warranties of any kind. The location data included herein has been obtained from information developed, produced, and maintained by third party providers; or has been extrapolated from maps incorporated in the ASCE 7 standard. While ASCE has made every effort to use data obtained from reliable sources or methodologies, ASCE does not make any representations or warranties as to the accuracy, completeness, reliability, currency, or quality of any data provided herein. Any third-party links provided by this Tool should not be construed as an endorsement, affiliation, relationship, or sponsorship of such third-party content by or from ASCE.

ASCE does not intend, nor should anyone interpret, the results provided by this Tool to replace the sound judgment of a competent professional, having knowledge and experience in the appropriate field(s) of practice, nor to substitute for the standard of care required of such professionals in interpreting and applying the contents of this Tool or the ASCE 7 standard.

In using this Tool, you expressly assume all risks associated with your use. Under no circumstances shall ASCE or its officers, directors, employees, members, affiliates, or agents be liable to you or any other person for any direct, indirect, special, incidental, or consequential damages arising from or related to your use of, or reliance on, the Tool or any information obtained therein. To the fullest extent permitted by law, you agree to release and hold harmless ASCE from any and all liability of any nature arising out of or resulting from any use of data provided by the ASCE 7 Hazard Tool.

SECTION 02 41 19 – SELECTIVE DEMOLITION

PART 1 - GENERAL

1.1 SUMMARY

A. This section covers the furnishing of materials, labor, and equipment required to partially or entirely remove and/or demolish those items identified on the Drawings; transport, salvage or dispose of said items; and restore any disturbed areas.

1.2 JOB CONDITIONS

A. Conditions of structures: The Owner assumes no responsibility for actual condition of structures to be salvaged or demolished. For the existing water treatment plant demolition, see architectural specifications.

B. Explosives: Use of explosives will not be permitted.

C. Traffic: Conduct demolition and removal operations to ensure minimum interference with streets, walks or other adjacent facilities being used. Issue Public Service Announcement on radio station for road closures.

D. Protection: Ensure safe passage of persons around area of demolition. Conduct operations to prevent injury to adjacent buildings, structures, and persons.

E. Damages: Promptly repair damages caused to adjacent structures by demolition operations at no cost to the Owner.

1.3 DEFINITIONS

A. Remove: Detach items from existing construction and dispose of them off-site unless indicated to be salvaged or reinstalled.

B. Remove and Salvage: Detach items from existing construction, in a manner to prevent damage, and deliver to Owner ready for reuse.

C. Remove and Reinstall: Detach items from existing construction, in a manner to prevent damage, prepare for reuse, and reinstall where indicated.

D. Existing to Remain: Leave existing items that are not to be removed and that are not otherwise indicated to be salvaged or reinstalled.

E. Dismantle: To remove by disassembling or detaching an item from a surface, using gentle methods and equipment to prevent damage to the item and surfaces; disposing of items unless indicated to be salvaged or reinstalled.

1.4 MATERIALS OWNERSHIP

A. Unless otherwise indicated, demolition waste becomes property of Contractor.

1.5 PREINSTALLATION MEETINGS

A. Predemolition Conference: Conduct conference at Project site.
   1. Inspect and discuss condition of construction to be selectively demolished.
   2. Review structural load limitations of existing structure.
   3. Review and finalize selective demolition schedule and verify availability of materials, demolition personnel, equipment, and facilities needed to make progress and avoid delays.
   4. Review requirements of work performed by other trades that rely on substrates exposed by selective demolition operations.
   5. Review areas where existing construction is to remain and requires protection.

1.6 INFORMATIONAL SUBMITTALS

A. Proposed Protection Measures: Submit report, including Drawings, that indicates the measures proposed for protecting individuals and property for environmental protection, for dust control and, for noise control. Indicate proposed locations and construction of barriers.

B. Schedule of Selective Demolition Activities: Indicate the following:
   1. Detailed sequence of selective demolition and removal work, with starting and ending dates for each activity. Ensure Owner's on-site operations are uninterrupted.
   2. Interruption of utility services. Indicate how long utility services will be interrupted.
   3. Coordination for shutoff, capping, and continuation of utility services.
   4. Coordination of Owner's continuing occupancy of portions of existing building and of Owner's partial occupancy of completed Work.

C. Predemolition Photographs or Video: Show existing conditions of adjoining construction, including finish surfaces that might be misconstrued as damage caused by demolition operations. Submit before Work begins.

1.7 FIELD CONDITIONS

A. Owner will occupy portions of building immediately adjacent to selective demolition area. Conduct selective demolition so Owner's operations will not be disrupted.

B. Conditions existing at time of inspection for bidding purpose will be maintained by Owner as far as practical.

C. Notify Owner of discrepancies between existing conditions and Drawings before proceeding with selective demolition.

D. Hazardous Materials: It is not expected that hazardous materials will be encountered in the Work.
   1. Hazardous materials will be removed by Owner before start of the Work.
   2. If suspected hazardous materials are encountered, do not disturb; immediately notify Architect and Owner. Hazardous materials will be removed by Owner under a separate contract.

E. Storage or sale of removed items or materials on-site is not permitted.

F. Utility Service: Maintain existing utilities indicated to remain in service and protect them against damage during selective demolition operations.

1. Maintain fire-protection facilities in service during selective demolition operations.

1.8 COORDINATION

A. Arrange selective demolition schedule so as not to interfere with Owner's operations.

PART 2 - PRODUCTS (NOT APPLICABLE)

2.1 PERFORMANCE REQUIREMENTS

A. Regulatory Requirements: Comply with governing EPA notification regulations before beginning selective demolition. Comply with hauling and disposal regulations of authorities having jurisdiction.

B. Standards: Comply with ASSE A10.6 and NFPA 241.

PART 3 - EXECUTION

3.1 EXAMINATION

A. Verify that utilities have been disconnected and capped before starting selective demolition operations.

B. Review Project Record Documents of existing construction or other existing condition and hazardous material information provided by Owner. Owner does not guarantee that existing conditions are same as those indicated in Project Record Documents.

C. Verify that hazardous materials have been remediated before proceeding with building demolition operations.

D. Survey of Existing Conditions: Record existing conditions by use of measured drawings or preconstruction photographs or video.

1. Inventory and record the condition of items to be removed and salvaged. Provide photographs or video of conditions that might be misconstrued as damage caused by salvage operations.
2. Before selective demolition or removal of existing building elements that will be reproduced or duplicated in final Work, make permanent record of measurements, materials, and construction details required to make exact reproduction.

3.2 UTILITY SERVICES AND MECHANICAL/ELECTRICAL SYSTEMS

A. Existing Services/Systems to Remain: Maintain services/systems indicated to remain and protect them against damage.

B. Existing Services/Systems to Be Removed, Relocated, or Abandoned: Locate, identify, disconnect, and seal or cap off utility services and mechanical/electrical systems serving areas to be selectively demolished.
1. Owner will arrange to shut off indicated services/systems when requested by Contractor.
2. Arrange to shut off utilities with utility companies.
3. If services/systems are required to be removed, relocated, or abandoned, provide temporary services/systems that bypass area of selective demolition and that maintain continuity of services/systems to other parts of building.

4. Disconnect, demolish, and remove fire-suppression systems, plumbing, and HVAC systems, equipment, and components indicated on Drawings to be removed.
    a. Piping to Be Removed: Remove portion of piping indicated to be removed and cap or plug remaining piping with same or compatible piping material.
    b. Piping to Be Abandoned in Place: Drain piping and cap or plug piping with same or compatible piping material and leave in place.
    c. Equipment to Be Removed: Disconnect and cap services and remove equipment.
    d. Equipment to Be Removed and Reinstalled: Disconnect and cap services and remove, clean, and store equipment; when appropriate, reinstall, reconnect, and make equipment operational.
    e. Equipment to Be Removed and Salvaged: Disconnect and cap services and remove equipment and deliver to Owner.
    f. Ducts to Be Removed: Remove portion of ducts indicated to be removed and plug remaining ducts with same or compatible ductwork material.
    g. Ducts to Be Abandoned in Place: Cap or plug ducts with same or compatible ductwork material and leave in place.

3.3 PROTECTION

A. Temporary Protection: Provide temporary barricades and other protection required to prevent injury to people and damage to adjacent buildings and facilities to remain.
    1. Provide protection to ensure safe passage of people around selective demolition area and to and from occupied portions of building.
    2. Provide temporary weather protection, during interval between selective demolition of existing construction on exterior surfaces and new construction, to prevent water leakage and damage to structure and interior areas.
    3. Protect walls, ceilings, floors, and other existing finish work that are to remain or that are exposed during selective demolition operations.
    4. Cover and protect furniture, furnishings, and equipment that have not been removed.
    5. Comply with requirements for temporary enclosures, dust control, heating, and cooling specified in Section 015000 "Temporary Facilities and Controls."

B. Temporary Shoring: Design, provide, and maintain shoring, bracing, and structural supports as required to preserve stability and prevent movement, settlement, or collapse of construction and finishes to remain, and to prevent unexpected or uncontrolled movement or collapse of construction being demolished.
    1. Strengthen or add new supports when required during progress of selective demolition.

C. Remove temporary barricades and protections where hazards no longer exist.

3.4 SITE SURFACE CONDITIONS

A. Examine the areas and conditions under which work of this section will be performed. Determine the location and extent of demolition required by the contract documents and verify the work required by a careful site examination. Some previous demolition or removal may have occurred since preparation of contract documents.

3.5 SELECTIVE DEMOLITION, GENERAL

A. General: Demolish and remove existing construction only to the extent required by new construction and as indicated. Use methods required to complete the Work within limitations of governing regulations and as follows:

1. Proceed with selective demolition systematically, from higher to lower level. Complete selective demolition operations above each floor or tier before disturbing supporting members on the next lower level.
2. Neatly cut openings and holes plumb, square, and true to dimensions required. Use cutting methods least likely to damage construction to remain or adjoining construction. Use hand tools or small power tools designed for sawing or grinding, not hammering and chopping. Temporarily cover openings to remain.
3. Cut or drill from the exposed or finished side into concealed surfaces to avoid marring existing finished surfaces.
4. Do not use cutting torches until work area is cleared of flammable materials. At concealed spaces, such as duct and pipe interiors, verify condition and contents of hidden space before starting flame-cutting operations. Maintain portable fire-suppression devices during flame-cutting operations.
5. Maintain fire watch during and for at least 2 hours after flame-cutting operations.
6. Maintain adequate ventilation when using cutting torches.
7. Remove decayed, vermin-infested, or otherwise dangerous or unsuitable materials and promptly dispose of off-site.
8. Remove structural framing members and lower to ground by method suitable to avoid free fall and to prevent ground impact or dust generation.
9. Locate selective demolition equipment and remove debris and materials so as not to impose excessive loads on supporting walls, floors, or framing.
10. Dispose of demolished items and materials promptly.

B. Site Access and Temporary Controls: Conduct selective demolition and debris-removal operations to ensure minimum interference with roads, streets, walks, walkways, and other adjacent occupied and used facilities.

C. Removed and Reinstalled Items:
1. Clean and repair items to functional condition adequate for intended reuse.
2. Pack or crate items after cleaning and repairing. Identify contents of containers.
3. Protect items from damage during transport and storage.
4. Reinstall items in locations indicated. Comply with installation requirements for new materials and equipment. Provide connections, supports, and miscellaneous materials necessary to make item functional for use indicated.

D. Existing Items to Remain: Protect construction indicated to remain against damage and soiling during selective demolition. When permitted by Architect, items may be removed to a suitable, protected storage location during selective demolition and cleaned and reinstalled in their original locations after selective demolition operations are complete.

3.6 SELECTIVE DEMOLITION PROCEDURES FOR SPECIFIC MATERIALS

A. Concrete: Demolish in small sections. Using power-driven saw, cut concrete to a depth of at least 3/4 inch (19 mm) at junctures with construction to remain. Dislodge concrete from reinforcement at perimeter of areas being demolished, cut reinforcement, and then remove remainder of concrete. Neatly trim openings to dimensions indicated.

B. Concrete: Demolish in sections. Cut concrete full depth at junctures with construction to remain and at regular intervals using power-driven saw, and then remove concrete between saw cuts.

C. Concrete Slabs-on-Grade: Saw-cut perimeter of area to be demolished, and then break up and remove.

3.7 DEMOLITION

A. Buried Structures:
   1. Manholes, other buried structures, and buried pipes identified on the Drawings, to be removed shall be carefully excavated, removed, and transported to the Contractor's salvage or disposal area.
   2. Excavations to remove buried structures and pipes shall be restored as described in Paragraph B below.
   3. Pipes not shown to be removed shall be abandoned in place and filled with slurry sand or bentonite slurry and securely plugged at ends.

B. Excavation Backfill: Completely fill below-grade areas and voids resulting from removal of structures.
   1. Backfill excavations with classified or unclassified material as appropriate for the location on-site.
   2. Thoroughly compact backfill material to 95 percent of maximum density.
   3. Fill shall be placed as described in Section 31 20 00, EARTH MOVING.

C. Miscellaneous Site Improvements: Miscellaneous site improvements such as signs, fences, bollards, parking bumpers, etc., shown to be removed on the Drawings, shall be removed, transported, and disposed of at Contactor's permitted disposal area.

3.8 DISPOSAL OF DEMOLISHED MATERIALS

A. Burning of removed materials will not be permitted on site.

B. Grubbing, organic soils, and unsuitable soil will be delivered to the City and Borough of Wrangell Monofil or a Contractor-designated permitted location. Contractor will be responsible for obtaining necessary permits for using Monofil.

C. All copper piping service lines removed will be delivered to an Owner specified site for Owner's use.

3.9 MEASUREMENT AND PAYMENT

A. All work included under this section is incidental and shall not be measured separately.

END OF SECTION

SECTION 03 20 00 – CONCRETE REINFORCING

PART 1 GENERAL

1.01 SECTION INCLUDES

A. Reinforcing steel for concrete equipment platform and masonry walls.
B. Supports and ties for reinforcement.

1.02 INFORMATIONAL SUBMITTALS

A. Quality assurance data:

1. Tests or certificates of compliance for each 25 tons (23000 kg) of each bar size of reinforcing steel supplied under each material specified.
2. Submit certificates and test reports to Special Inspector.

1.03 ACTION SUBMITTALS

A. Shop Drawings:

1. Chairs for slab reinforcing: Submit section detail cut through all slabs 12” (300 mm) thick or less showing all dimensions for form deck, reinforcing bars, chairs and specified concrete cover, all verifying proper chair size. Submit details for each different slab condition (slab thickness, form deck thickness, reinforcing bar sizes, and concrete cover). This applies to slabs-on-grade and formed slabs.
2. Elevations of CMU walls showing reinforcing bars for vertical cells and bond beams and horizontal reinforcing. Elevations shall show expansion joints, cell and coursing lines, wall openings and penetrations, and additional reinforcing at wall openings.
3. Shop Drawings will be reviewed by Owner's Representative for conformance to reinforcing bar material, size, and spacing only.

1.04 QUALITY ASSURANCE

A. Regulatory requirements:

1. Perform concrete reinforcement work in accordance with CRSI Manual of Standard Practice, and CRSI Placing Reinforcing Bars.
2. Conform to ACI 301 and 315.

PART 2 PRODUCTS

2.01 MATERIALS

A. Bars: ASTM A615/A615M, Grade 60 (420) deformed bars unless otherwise noted on the plans.

2.02 ACCESSORY MATERIALS

A. Tie wire: Minimum 16-gage (1.5 mm) annealed type or acceptable patented system.

B. Metal chairs, standees, bolsters, bar supports, spacers and braces: Sized and shaped for strength and support of reinforcement and construction loads during installation and placement of concrete.

2.03 FABRICATION

A. Fabricate in accordance with ACI 301, and 315, providing concrete cover specified on Drawings.
B. Locate reinforcing splices, not shown, at points of minimum stress. Indicate location of splices on Shop Drawings.

C. Weld reinforcing bars in accordance with AWS D1.4.CONCRETE REINFORCING 30588.01.00

D. Mechanical splices where used shall be staggered at least 40 bar diameters with not more than 50% of splices in 1 plane.

1. Mechanical splice may be used instead of lap splice and shall develop at least 125% of yield strength of bar in tension and shall develop ultimate strength of bar in compression.
2. Mechanical splices shall not be introduced at bottoms of walls, corners of walls, top bars over supports of beams, bottom bars midway between supports of beams or other locations of high stress in bar. Where splice locations are desired where not shown, Contractor shall specifically request Engineer's review of splice type and location prior to fabrication of reinforcement.

PART 3 EXECUTION

3.01 INSTALLATION

A. Remove scale, loose flaky rust, dirt, grease, curing compound, and other coatings which would impair bond.

B. Install slab reinforcing bars in correct position by use of preformed bolsters and spacers, except concrete blocks may be used to position bars in concrete placed on grade. Concrete blocks shall have compressive strength equal to that of surrounding concrete.

C. Space bars properly and tie securely in position before placing concrete. Wire tie ends shall face away from forms. Tack welding to keep reinforcing in place is not permitted.

D. Do not tack weld anchor bolts or other embeds to reinforcing bars.

E. Place safety caps on exposed ends of vertical bars that pose danger to life safety.

F. Install dowels in slabs at locations shown and at right angles to joint being doweled. Accurately position and align dowels parallel to finished concrete surface and rigidly support during concrete placement.

3.02 TOLERANCES

A. Spacing between adjacent bars and distance between layers of bars shall not vary from position shown on Drawings by more than tolerances specified in ACI 117.

B. Concrete cover: Minimum concrete cover of main reinforcing shall be as shown or specified. Allowable variation for minimum cover shall be as specified in ACI 117.

END OF SECTION

SECTION 03 30 00 – CAST-IN-PLACE CONCRETE

PART 1 - GENERAL

1.01 SUMMARY

A. Structural Concrete Elements: All work necessary to construct structural concrete elements, including construction of formwork, installation of reinforcement steel, and producing, delivering, testing, placing, curing, and protecting concrete.

1.02 REFERENCE STANDARDS

A. American Concrete Institute (ACI)

1. ACI 117 Specifications for Tolerances for Concrete Construction and Materials
2. ACI 212.3R Chemical Admixtures for Concrete
3. ACI 214 Guide to Evaluation of Strength Test Results of Concrete
4. ACI 301 Standard Specification for Structural Concrete
5. ACI 304R Guide for Measuring, Mixing, Transporting and Placing Concrete
6. ACI 305R Hot Weather Concreting
7. ACI 306.1 Cold Weather Concreting
8. ACI 308R Guide to Curing Concrete
9. ACI 309 Guide for Consolidation of Concrete
10. ACI 315 Details and Detailing of Concrete Reinforcement
11. ACI 318 Building Code Requirements for Structural Concrete and Commentary
12. ACI 347 Guide to Formwork for Concrete
13. ACI 504 Guide to Sealing Joints in Concrete Structures
14. ACI 546R Concrete Repair Guide

B. ASTM International (ASTM)

1. ASTM A 36 Standard Specification for Carbon Structural Steel
2. ASTM A 615 Standard Specification for Deformed and Plain Carbon-Steel Bars for Concrete Reinforcement
3. ASTM A 706 Standard Specification for Deformed and Plain Low-Alloy Steel Bars for Concrete Reinforcement
4. ASTM A 775 Standard Specification for Epoxy-Coated Steel Reinforcing Bars
5. ASTM C 31 Making and Curing Concrete Test Specimens in the Field
6. ASTM C 33 Concrete Aggregates
7. ASTM C 39 Compressive Strength of Cylindrical Concrete Specimens
8. ASTM C 41 Obtaining and Testing Drilled Cores and Sawed Beams of Concrete
9. ASTM C 94 Ready-Mixed Concrete
10. ASTM C 114 Chemical Analysis of Hydraulic Cement
11. ASTM C 136 Sieve analysis of Fine and Coarse Aggregates.
12. ASTM C 138 Density (Unit Weight), Yield, and Air Content (Gravimetric) of Concrete.
13. ASTM C 143 Slump of Hydraulic-Cement Concrete
14. ASTM C 150 Portland Cement
15. ASTM C 171 Sheet Materials for Curing Concrete.
16. ASTM C 172 Standard Practice for Sampling Freshly Mixed Concrete
17. ASTM C 231 Air Content of Freshly Mixed Concrete by the Pressure Method.
18. ASTM C 260 Air-entraining Admixtures for Concrete
19. ASTM C 295 Petrographic Examination of Aggregates for Concrete
20. ASTM C 309 Liquid Membrane-Forming Compounds for Curing Concrete.
21. ASTM C 494 Chemical Admixtures for Concrete

22. ASTM C 618 Coal Fly Ash and Raw or Calcined Natural Pozzolan for Use in Concrete
23. ASTM C 1017 Chemical Admixtures for Use in Producing Flowing Concrete.
24. ASTM C 1064 Temperature of Freshly Mixed Hydraulic Cement Concrete.
25. ASTM C 1074 Estimating Concrete Strength by the Maturity Method
26. ASTM C 1077 Standard Practice for Laboratories Testing Concrete and Concrete Aggregates for Use in Construction and Criteria for Laboratory Evaluation
27. ASTM C 1260 Potential Alkali Reactivity of Aggregates (Mortar-Bar Method)
28. ASTM C 1293 Determination of Length Change of Concrete Due to Alkali-Silica Reaction
29. ASTM C 1315 Liquid Membrane-Forming Compounds Having Special Properties for Curing and Sealing Concrete.
30. ASTM C 1567 Determining the Potential Alkali-silica Reactivity of Combinations of Cementitious Materials and Aggregate (Accelerated Mortar-Bar Method)
31. ASTM C 1602 Mixing Water Used in the Production of Hydraulic Cement Concrete.
32. ASTM D 1751 Preformed Expansion Joint Filler for Concrete Paving and Structural Construction (Non-extruding and Resilient Bituminous Types).
33. ASTM D 1752 Preformed Sponge Rubber Cork and recycled PVC Expansion Joint Fillers for Concrete Paving and Structural Construction
34. ASTM D 3665 Standard Practice for Random Sampling of Construction Materials

C. CRSI – Concrete Reinforcing Steel Institute
   1. CRSI Manual of Standard Practice

D. APA – The Engineered Wood Association (APA)
   1. APA PS 1 Structural Plywood

E. Western Wood Products Association (WWPA)
   1. WWPA G5 Western Lumber Grading Rules

1.03 SUBMITTALS

A. RSN 03 30 00-1, Mix Design(s) Data:
   1. Mix proportion/design sheet
   2. 28-day strength test data as allowed by ACI 301:
      a. Field test data within 12 months of the date of submittal
      b. Field or laboratory trial batches within 6 months of the date of submittal
   3. Cementitious materials certifications and test reports:
      a. Manufacturer's certification and mill test reports for each lot from which shipments are provided.
   4. Aggregate certification and test reports:
      a. Producer's physical property location and certification stating compliance with the specified material properties.
      b. Test reports (less than 6 months old) demonstrating compliance with the specified material properties, such as non-deleterious (alkali-silica-reactive (ASR)) aggregates and gradation.
   5. Manufacturer data sheets for admixtures to be incorporated into the mix.
   6. Re-submit mix design for change in material source or type.

B. RSN 03 30 00-2, Manufacturer data sheets for materials to be incorporated into the work, including, but not limited to:
   1. Curing materials

2. Bonding agents
3. Expansion joint material

C. RSN 03 30 00-3, Reinforcement Shop and Assembly Drawings
   1. Shop Drawings: Details shop fabrication requirements (e.g., length and bending requirements) for reinforcement at splices and joints and identifies reinforcement quantities.
   2. Assembly Drawings: Details how the reinforcement is to be installed

D. RSN 03 30 00-4, Reinforcement Certified Materials Test Report (CMTR) demonstrating compliance with the material properties for reinforcing steel.

E. RSN 03 30 00-5, Formwork Design and Assembly Drawings

F. RSN 03 30 00-6, Concrete Placement Drawings:
   1. Drawings for each individual concrete placement. An individual concrete placement is defined as a portion of concrete work placed in one continuous operation between specified lines or joints.
   2. Show locations, dimensions, blockouts, openings, recesses, waterstops, and finishes.
   3. Show details of items embedded in or associated with placement except reinforcing steel.
   4. Include a separate drawing showing placement sequence.
   5. List reference drawings from which details shown on placement drawing were obtained on each drawing.
   6. Reference related steel reinforcement drawings associated with placement on each drawing.

G. RSN 03 30 00-7, Concrete Placement Schedule:
   1. Written plan describing location, sequence, and the scheduled date for concrete placements.
   2. Complete, detailed concrete placement schedule showing the Contractor's plan for placement of individual features, units, and other elements of concrete work.

H. RSN 03 30 00-8, Concrete Placement Plan(s)
   1. Written plan(s) describing how each concrete placement will be executed. Include items such as, but not necessarily limited to:
      a. Anticipated haul times to the job-site including, if necessary, provisions to account for long hauls.
      b. Provisions to account for adverse environmental conditions (e.g., heat, cold, wind)
      c. Method of concrete placement (e.g., direct placement from delivery truck discharge chute, pump truck).
      d. Provisions to ensure adequate concrete placement and consolidation in areas of rebar congestion or limited accessibility of the concrete discharge, such as "bird mouths" in wall placements.
      e. Identify the method of curing and how the completed work will be protected against damage from environmental conditions and construction activities.

I. RSN 03 30 00-9, Cold Weather Placement Plan
   1. Submit detailed procedures for the production, transportation, placement, protection, curing, and temperature monitoring of concrete during cold weather. Include procedures to be implemented upon abrupt changes in weather conditions or equipment failures.

J. RSN 03 30 00-10, Hot Weather Placement Plan

1. Submit detailed procedures for the production, transportation, placement, protection, curing, and temperature monitoring of concrete during hot weather.
2. RSN 03 30 00-11, Certifications:
3. Batch Plant: National Ready Mixed Concrete Association (NRMCA) Certification of Production Facilities.
4. Concrete Materials Testing Laboratory: Accredited testing laboratory, including laboratory and field technicians, meeting the criteria of ASTM C 1077.

K. RSN 03 30 00-11, Certifications:
1. Batch Plant: National Ready Mixed Concrete Association (NRMCA) Certification of Production Facilities.
2. Concrete Materials Testing Laboratory: Accredited testing laboratory, including laboratory and field technicians, meeting the criteria of ASTM C 1077.

L. RSN 03 30 00-12, Concrete Batch Tickets
1. Provide concrete batch tickets from each concrete delivery truck at the time of delivery.

M. RSN 03 30 00-13, Protection Period Temperature Records
1. Submit temperature records documenting the temperature of the curing environment during the protection period.

1.04 DELIVERY, STORAGE, AND HANDLING

A. With each load of concrete to the job site, furnish batch ticket to the on-site Resident Project Representative. Batch tickets shall comply with the requirements of ASTM C 94.

B. Concrete Reinforcement Steel:
1. Store reinforcement of different sizes and shapes in separate piles or racks raised above the ground to avoid rusting.
2. Protect from contaminants such as grease, oil, and dirt.
3. Provide for identification after bundles are broken and tags removed.

PART 2 - PRODUCTS

2.01 CEMENTITIOUS MATERIALS

A. Portland Cement:
1. ASTM C 150, Type II or V, gray color. Meet equivalent alkalies requirements of ASTM C 150 - Table 2.

B. Pozzolan:
1. ASTM C 618, Class C or F. Test for effectiveness in controlling alkali-silica reaction (ASR) under supplementary optional physical requirements in Table 3 of ASTM C 618. Use low-alkali cement for test.

2.02 WATER

A. Potable water is acceptable without testing. Where non-potable water will be used (wholly or blended with potable water), the water shall comply with ASTM C 1602, including the optional requirements of Table 2.

2.03 AGGREGATES

A. Fine Aggregate: ASTM C 33, except allowable fines content (material passing No. 200 sieve) less than 3 percent.

B. Coarse Aggregate: ASTM C 33; nominal maximum size aggregate (NMSA) as identified in Table 03 30 00A – Mix Design Table.

C. Assure aggregates are not deleteriously ASR.
   1. Test coarse and fine aggregate in accordance with ASTM C 1260 for the potential for deleterious alkali-silica reaction.
      a. Expansion at 16 days does not exceed 0.10 percent - acceptable.
      b. For expansion at 16 days greater than 0.10 percent, but less than 0.20 percent, aggregates are acceptable if petrographic examination shows the expansion is not due to ASR.
      c. Where the above criteria are not satisfied, test specimens according to ASTM C 1567 using all components (e.g., coarse aggregate, fine aggregate, cementitious materials, and/or specific reactivity reducing chemicals) in the proportions proposed for the mixture design and retest.
         i. If expansion of the test specimens does not exceed 0.10 percent at 16 days from casting, the aggregates will be acceptable.
         ii. If expansion of the test specimens is greater than 0.10 percent at 16 days, the aggregates will not be acceptable unless adjustments to the mixture design are shown to effectively mitigate the expansion or testing in accordance with ASTM C 1293 indicates the aggregates will not experience deleterious expansion.
         iii. If expansion at 16 days is greater than 0.20 percent, the aggregates will not be acceptable unless adjustments to the mix design are shown to effectively mitigate the expansion in accordance with ASTM C 1567.
   2. Substitution of ASTM C 1293 test results for ASTM C 1260 test results is acceptable, but the average concrete prism expansion shall be less than 0.04 percent at one year.

2.04 ADMIXTURES

A. Admixtures are limited to those approved.

B. Do not use chemical admixtures, which contain more than 0.1 percent chloride, by weight.

C. Admixtures shall be compatible with each other as certified by the manufacturers or demonstrated through trial batches.

D. Air-Entraining Admixture shall comply with ASTM C 260.

E. Chemical admixtures shall comply with ASTM C 494, and plasticizing admixtures shall be tested in accordance with ASTM C 1017.

2.05 STEEL REINFORCEMENT

A. Reinforcing Bars:
   1. Plain Dowels: ASTM A 36.
   2. Deformed steel bars: Grade 60; ASTM A 615, ASTM A 706, or ASTM A 775.

B. Mechanical Splices and Terminations: Mechanical splices and terminations may be approved to increase assembly efficiency and increase the clear space around reinforcement steel. Use of such features must be specifically identified on the reinforcement assembly drawings and approved by the Engineer.

2.06 WATERSTOP

A. Hydrophilic waterstop shall be a preformed joint sealant that swells in the presence of water, such as Hydro-Flex Waterstop HF302, or approved equal.

B. Hydrophobic waterstop shall be a preformed joint sealant that does not swell in the presence of water, such as Synko-Flex Waterstop SF302, or approved equal.

2.07 CURING MATERIALS

A. Water: ASTM C 1602, including optional requirements of Table 2.

B. Curing Compound:
   1. Curing Compound: ASTM C 1315, type II (white pigmented).
   2. ASTM C 309, Type 1-D.

C. Sheet Materials: ASTM C 171.

2.08 BONDING AGENT:

A. Non-rewettable type for use in water retaining structures.

B. Available Product: Subject to compliance with requirements, products which may be incorporated into the work include, but are not limited to, the following:
   1. "Weld-Crete"; Larson Products
   2. "Everbond"; L&M Construction Chemicals
   3. "AKKRO 7T"; Euclid Chemical Co.
   4. Euco #452 Epoxy System; Euclid Chemical Co.
   5. "Daraweld C"; W.R. Grace
   6. "Acryl 10"; BASF

2.09 ACCESSORIES

A. Sponge Rubber Joint Filler:
   1. ASTM D 1752, Type I, except as specified.
   2. Test specimen compression load: 50 to 150 pounds per square inch.

B. Joint Filler Adhesive: Non-bituminous adhesive recommended by filler manufacturer.

2.10 CONCRETE MIX PROPORTIONS

A. The Contractor shall design concrete mixes.

B. Design mixes in accordance with Table 03 30 00A – Mix Table:

Table 03 30 00A – Mix Table

Mix No.	Feature	f'c (lb/in^2)	Max. w/cm[1]	NMSA[2] (inches)	Percent Pozzolan[3]	Slump (inches)	Air Content[4]	Notes
1	Typical Structural Concrete	4,000 @ 28 days	0.45	3/4	20 ± 5	4 (max)	5%, +/- 1.5%	5
2	Lean Concrete	3,000 @ 28 days	0.50	3/4	20 ± 5	6 (max)	5%, ±1.5%	6

[1]Maximum water/cementitious ratio. Cementitious to mean cement plus pozzolan.
[2]Nominal Maximum Size Aggregate
[3]Percent of cementitious content by weight
[4]Measured at point of placement
5 – For steel trowel finished interior slabs on grade, air content is not to exceed 3% at the point of discharge.
6 – Lean Concrete is not specifically required for the project but can be used as leveling medium or "mud slab" at the Contractor's option.

1. Slump: In accordance with ASTM C 143.
2. Air Entrainment: Percent air by volume of concrete as discharged at placement, in accordance with ASTM C 231.
3. Use set-retarding admixtures only as approved by the Engineer.

2.11 CONCRETE TEMPERATURE

A. Batch concrete as necessary to achieve placement temperatures between 50ºF and 90°F.

B. Use materials and/or procedures necessary to achieve required placement temperatures; including, but not limited to, the following:
   1. Replace all or a part of the mixing water with chilled water.
   2. Replace part of the mixing water with ice.
   3. Introduce liquid nitrogen into the concrete as it is batched.

C. When air temperature has fallen, or is expected to fall, below 40 degrees Fahrenheit, prepare ingredients and mix in accordance with ACI 306.1.

PART 3 - EXECUTION

3.01 FORMWORK

A. Design, construct, and remove formwork in accordance with ACI 347.

B. Tolerances: Tolerances are based on the finished concrete surfaces as described in ACI 117.

3.02 STEEL REINFORCEMENT

A. Clean reinforcement surfaces of heavy, flaky rust; loose mill scale; dirt; grease; and other foreign substances before placement.

B. Accurately place and secure in position so that reinforcement will not be displaced during concrete placement.

C. Field bending is not allowed, unless specifically approved by the Engineer.

D. Do not weld (or tack weld) reinforcing bars unless shown on drawings or specifically approved by the Engineer.

E. Place reinforcement with a clear distance of 1-inch, minimum, between surrounding reinforcement and anchor bolts, form ties, or other embedded metalwork, unless otherwise shown on drawings.

F. Place plain dowels parallel to each other and to concrete surface.

G. Tolerances: In accordance with ACI 117

3.03 CONCRETE

A. Hot Weather: In accordance with ACI 305R.

B. Cold Weather: In accordance with ACI 306.1.

C. BATCHING, MIXING, AND TRANSPORTING

1. Batch, mix, and transport concrete to site in accordance with ASTM C 94. The Contractor must allow the Resident Project Representative access to the batch plant to observe batching operations, sequence of batching, and to confirm batch component tolerances.
2. Chemical admixtures shall be incorporated into the mix in accordance with ACI 212.3R and the manufacture's recommendations.
3. For hauls longer than 1-1/2 hours, extended set control admixtures may be used as approved during the mix design approval process.

D. CONCRETE PLACEMENT

1. In accordance with ACI 304R.
2. In accordance with the approved Concrete Placement Plan.
3. Seven days (minimum) between adjacent placements, or as approved by the Engineer.
4. Clean and roughen surfaces of existing concrete to be covered with fresh concrete.
    a. Remove laitance, loose, or defective concrete, coatings, sand, curing compound, and other foreign material.
    b. Sandblast, steel shotblast, or high-pressure water jet surfaces, or use other methods approved by the Engineer, to create a surface profile equivalent to, or larger than, CSP 5 as defined in ICRI 310.2.
    c. Wash surface thoroughly.
5. Provide one day advance notification to the Resident Project Representative for each concrete placement.
6. Before placing concrete, verify that installation of formwork, reinforcement, and embedded items is complete and that required inspections have been performed; complete and sign the Concrete Placement Form (appended to this section). The Resident Project Representative will review the site conditions and, if no exceptions are identified, sign the form to authorize commencement of placement operations. Place concrete in presence of the Resident Project Representative.
7. On-site adjustments to the fresh concrete mixture shall be as allowed by ASTM C 94 and as approved by the Engineer and Resident Project Representative.

a. The concrete supplier may add additional air entraining admixture to achieve the desired air content, provided the slump and time restrictions have not been exceeded. Additional air entraining admixture shall be recorded on the batch ticket to the nearest ounce.
b. Upon arrival at the job site, the Contractor may execute a one-time water addition to the batched concrete if:
    i) Slump and time restrictions have not been exceeded
    ii) No concrete has been discharged,
    iii) The additional water will not result in a W/C ratio greater than the W/C ratio of the approved mix design, and
    iv) The volume of additional water shall be recorded on the batch ticket to the nearest gallon.
c. After the one on-site addition of air entraining admixture or water, the concrete shall be mixed for at least 30 revolutions of the mixer drum at mixing speed.
d. Contractor quality testing and quality assurance tests by the Resident Project Representative will be taken after the on-site adjustment and additional mixing.

8. Thoroughly moisten absorptive surfaces, such as earth and concrete, to be covered with concrete to reduce moisture loss from the fresh concrete into the substrate/adjoining surfaces.
9. Convey concrete from mixer to the place of final deposit rapidly by methods that prevent segregation or loss of ingredients and will ensure the required quality of concrete. Use conveying equipment, conveyors, hoppers, baffles, chutes, pumps that are sized and designed to prevent cold joints from occurring and prevent segregation in discharged concrete. Clean conveying equipment before each placement. Do not use aluminum pipes and chutes for placing or pumping concrete.
10. Do not use concrete which has started to set and cannot be properly placed.
11. Deposit concrete in forms in horizontal layers with proper consolidation into previous layers and in a manner to avoid inclined construction joints. Place each layer while preceding layer is still plastic, to avoid cold joints. For walls greater than six feet in height, concrete shall be placed using a tremmie inserted into the formwork to prevent a concrete free-fall discharge of more than five feet. For wall pours greater than 12 feet in height, the Contractor shall include specific placement methods and procedures in the Concrete Placement Plan submittal.
    a. Consolidate placed concrete with mechanical vibrating equipment. Use equipment and procedures for consolidating concrete recommended by ACI 309R.
    b. Do not use vibrators to transport concrete inside forms. Insert and withdraw vibrators vertically at uniformly spaced locations no farther than the visible effectiveness of the vibrator. Place vibrators to rapidly penetrate placed layer and at least six inches into preceding layer. Do not insert vibrators into lower layers of concrete that have begun to lose plasticity. At each insertion, limit duration of vibration to time necessary to consolidate concrete and complete embedment of reinforcement and other embedded items without causing mix constituents to segregate.
    c. Make construction joints only where located on Drawings unless otherwise approved by the Engineer and or the Resident Project Representative. Plan placements to continuously place concrete from one construction joint to another.
12. Deposit concrete for slabs in a continuous operation, within limits of construction joints, until placement of a panel or section is complete.

a. Consolidate concrete during placement operations such that concrete is thoroughly worked around reinforcement and other embedded items and into corners.

b. Vibrate concrete until concrete has been consolidated to maximum practical density, is free from pockets of coarse aggregate, and is thoroughly worked around reinforcement and other embedded items and closes snugly into corners and against surfaces of forms.

c. Maintain reinforcement in position on chairs during concrete placement.

d. Screed slab surfaces with a straightedge and strike off to correct elevations.

e. Slope surfaces uniformly to drains where required

f. Begin initial floating using bull floats or darbies to form a uniform and open-textured surface plane, free of humps or hollows, before excess moisture or bleed-water appears on the surface. Do not further disturb slab surfaces before starting finishing operations.

13. Protect concrete work from physical damage or reduced strength that could be caused by environmental conditions, such as cold, heat, and wind.

3.04 EMBEDDED ITEMS

A. At the time of concrete placement, embedded items shall be clean and free from mud, oil, and other coatings that may adversely affect bonding capacity. Aluminum embedments shall be coated with a bituminous material to prevent electrolytic action between the embedded item and reinforcing steel that results in concrete deterioration. Embedment items shall be accurately placed and securely fastened to the forms in such a manner that the placing of concrete shall not alter their alignment or location. Contact between embedded items and reinforcing steel or tendon ducts is not permitted.

3.05 JOINTS AND EDGES

A. Construction joints (Const. Jt.):
   1. Construction joints are joints which are purposely placed in concrete to facilitate construction, reduce initial shrinkage stresses and cracks, allow time for installation of embedded metalwork, or allow for subsequent placing of other concrete.
   2. Bond is required at construction joints regardless of whether or not reinforcement is continuous across joint.
   3. Locate construction joints where shown on drawings.
   4. Relocation, addition, or elimination of construction joints will be subject to approval by the Engineer.
   5. Clean, roughen, and surface dry surfaces of construction joints to be covered with fresh concrete.
   6. Do not use a mortar layer on construction joints.

B. Control Joints (CJ):
   1. Control joints are joints placed in concrete to provide for control of initial shrinkage stresses and cracks of monolithic units.
   2. Saw-cut control joints are to have a minimum depth of one-quarter the concrete thickness, but they must be kept shallow enough to avoid cutting into the reinforcing steel.
   3. Saw-cut joints are to be executed as soon as final set has been achieved and the saw cutting operation will not ravel or dislodge the coarse aggregate out of the slab.

a. In hot weather, final set is typically reached within 4 hours after the slab has been finished.
b. In cold weather, final set is typically reached within 12 hours after the slab has been finished.

C. Edges:
1. Chamfer edges of permanently exposed concrete, except slabs and top edges of curbs, with a 45-degree bevel 3/4-inch by 3/4-inch; unless otherwise shown of drawings.
2. Tooled Edges: Tool exposed edges of slabs and top edges of curbs to a radius of 1/4-inch.
3. Preformed joints consisting of plastic or metal strips not allowed.

3.06 FINISHING

A. Formed Surfaces:
1. Below Grade Surfaces: Smooth-form finish as defined in ACI 301
2. Exposed Surfaces: Smooth-rubbed finish as defined in ACI 301

B. Unformed Surfaces and Flatwork:
1. Below Grade Surfaces: Float finish as defined in ACI 301.
2. Water Conveying Surfaces: Float finish as defined in ACI 301.
3. Exposed Surfaces: Broom or belt finish as defined in ACI 301.
a. Treading surfaces: Broom/belt surfaces perpendicular to the typical direction of traffic.
b. Slope exterior surfaces, or interior surfaces identified on the drawings, for drainage:
i. Slope narrow surfaces, such as tops of walls, approximately 3/8-inch per foot of width, unless other slopes or level surface requirements are identified on the drawings.
ii. Slope broad surfaces, such as walks, platforms, and decks approximately ¼-inch per foot, unless other slopes or level surface requirements are identified on the drawings.

C. Finishing flatwork with steel trowels is not allowed except for interior slabs-on-grade.

3.07 TOLERANCES

A. Tolerances: In accordance with ACI 117.

B. Specified tolerances are consistent with modern construction practices and governed by effects that permissible variations may have upon a structure. Tolerances for individual components and activities are not cumulative; the completed construction must be functional and suitable for its intended use, including compatibility with the surrounding grades and structural elements and functionally interface with other project features, such as mechanical or electrical appurtenances.

C. Prevention of Repeated Failure to Meet Tolerances: When concrete placements result in hardened concrete which do not meet specified tolerances, submit to the Engineer an outline of preventive actions, such as modifications to forms, modified procedures, and/or modified finishing techniques to be implemented to avoid repeated failures.

3.08 CONCRETE PATCHING AND REPAIR

A. Repair concrete surfaces that are not within specified tolerances.

B. Minor surface defects: Repair minor surface defects in accordance with ACI 301.

C. Major surface defects: Surface defects penetrating deeper than (or equal to) the thickness of concrete over the reinforcement are considered major surface defects. For major surface defects, the Contractor shall propose a repair procedure in accordance with the guidelines presented in ACI 546R. The repair proposal shall be reviewed and approved by the Engineer.

D. Other defects: Where the finished product is outside the tolerances for alignment, plane, or grade, or cannot be used for its intended purpose, the Contractor shall propose a repair procedure to resolve the deficiency. The repair proposal shall be reviewed and approved by the Engineer.

E. Acceptance: The Resident Project Representative will inspect and provide final acceptance of repairs in collaboration and concurrence with the Engineer.

3.09 CURING

A. Cure concrete in accordance with ACI 308R.

B. Water Curing:
   1. Keep concrete surface wet for 7 days, minimum, from time concrete has attained sufficient set to prevent detrimental effects to surface.
   2. Cure methods:
      a. Water-saturated material.
      b. System of perforated pipes, mechanical sprinklers, or porous hose.
      c. Other methods that will keep surfaces wet.

C. Curing with Curing Compound:
   1. Apply in accordance with manufacture's application recommendations.
   2. Apply to concrete surface to provide a water-retaining film. As necessary, decrease application rate on rough surfaces to obtain a continuous film. Reapply as necessary to maintain a continuous, water-retaining film on surface for 28 days.

D. Sheet Materials Curing Method:
   1. Thoroughly moisten concrete surface by lightly spraying with water as soon as concrete has hardened sufficiently to prevent damage.
   2. Completely cover concrete surface with sheet material to provide an airtight, water-retaining film over entire surface.
   3. Lap edges of sheets to seal adjacent sheets.
   4. Place tightly against concrete surface at extreme edge of curing area.
   5. Secure film to withstand wind and prevent circulation of air inside curing film.

E. Form Curing: Concrete forms with documentation demonstrating that the form surface will limit the rate of moisture loss to less than 0.08 lb/ft^2 in 72 hours may be left in place for the duration of the cure period. Alternatively, forms lined with a sheet material complying with ASTM C 171 may also be left in place for the duration of the curing period.

3.10 PROTECTION

A. Protect concrete from damage until final acceptance by the Engineer.
   1. Do not load, remove forms or shoring, or backfill against concrete until concrete has gained sufficient strength to safely support its weight and imposed loads.
   2. Protect fresh concrete against erosion from rain, hail, sleet, or snow; contamination from foreign materials; and damage from foot traffic until the concrete has hardened.

3. Protect concrete from heavy foot traffic and other construction activities by covering with plywood or other suitable material.

B. Protect Concrete when Freezing Temperatures are Imminent:
   1. Maintain concrete at a temperature of 50 degrees Fahrenheit or greater for 72 hours, minimum, after placement. Vent heater and prevent concrete from drying where artificial heat is employed.
   2. When water curing, protect concrete from freezing during. After discontinuance of water curing, maintain at a temperature of 50 degrees Fahrenheit or greater for next 72 hours.
   3. Discontinue protection against cold weather such that the drop in temperature of the concrete will be gradual and will not exceed 5 degrees Fahrenheit per hour and 40 degrees Fahrenheit in 24 hours for thin sections, and 5 degrees Fahrenheit per hour and 20 degrees Fahrenheit in 24 hours for massive sections (smallest dimension greater than 36 inches).

3.11 FIELD QUALITY CONTROL

A. Testing Agency: The Contractor is responsible for field quality control testing. Contractor will use a qualified independent testing and inspecting agency to sample materials, perform tests, and submit test reports during concrete placement according to requirements specified herein.

B. Testing Services: Testing of composite samples of fresh concrete obtained according to ASTM C 172 shall be performed according to the following requirements:
   1. Minimum Testing Frequency:
      a. Obtain one composite sample from the first load each day for each concrete mix placed.
      b. After the first load, obtain one composite sample from each day's pour for each 50 yd^3 (or fraction thereof). Randomly select loads to be sampled in accordance with ASTM D 3665.
   2. Slump: ASTM C 143; one test at point of placement for each composite sample. Perform additional tests when concrete consistency appears to change.
   3. Air Content: ASTM C 231, pressure method; one test for each composite sample.
   4. Concrete Temperature: ASTM C 1064; one test hourly when air temperature is 40 deg F, or below, and when 80 deg F, or above, and one test for each composite sample.
   5. Unit Weight: ASTM C 138; one test for each composite sample.
   6. Test Specimens: ASTM C 31; cast a set of a minimum of 5 cylinder specimens for laboratory curing (4-in. x 8-in. cylinder test specimens) for each composite sample.
   7. Additional field cure cylinders may be taken at the Contractor's discretion or as directed by the Engineer or Resident Project Representative.
   8. Compressive-Strength Tests: ASTM C 39
      a. One test cylinder will be tested at 7 Days and 3 at 28 Days. The remaining cylinder(s) will be held to verify test results, if needed. The 7-Day cylinder will be used as an indication of normal strength gain and will not have associated acceptance criteria.

C. Test results shall be reported in writing to the Engineer, concrete producer, and Contractor within 48 hours of testing. Concrete testing reports shall contain placement identification name and number, date of placement, concrete delivery truck number, batch ticket number, name of concrete testing and inspecting agency, location of concrete batch in Work, design compressive strength at 28 days, concrete mix design identification name/number, strength result(s), including type of break.

D. Evaluation of strength test results and acceptance of concrete shall be in accordance with ACI 214 and ACI 301.

1. If any concrete fails to meet these requirements, immediate corrective action shall be taken to increase the compressive strength for subsequent batches of the type of concrete affected.
2. Concrete that fails to meet the ACI requirements and these Specifications is subject to removal and replacement at no additional cost to the Owner.

E. Additional Tests: Testing and inspecting agency shall make additional tests of concrete when test results indicate that slump, air entrainment, compressive strengths, or other specified requirements have not been met, or as directed by the Engineer.

END OF SECTION

SECTION 04 05 00 - COMMON WORK RESULTS FOR MASONRY

PART 1 GENERAL

1.01 SECTION INCLUDES

A. Masonry mortar.

B. Masonry grout.

C. Anchorages and reinforcements.

D. Masonry cavity wall drainage system.

E. Accessories.

1.02 RELATED REQUIREMENTS

A. Section 03 20 00 – Concrete Reinforcing: Reinforcing bars.

B. Section 04 22 00 – Concrete Unit Masonry.

1.03 INFORMATIONAL SUBMITTALS

A. Product Data: Anchorage system for field conditions not specified.

B. Quality assurance data:
   1. Certificates of compliance for reinforcing.
   2. Certified laboratory tests for compressive strength of mortar and grout mixes shall be submitted for review prior to commencement of masonry work, unless approved mix as specified is used.

C. Field test reports.

1.04 ACTION SUBMITTALS

A. Shop Drawings showing concrete masonry unit (CMU) wall elevations. Elevations shall be drawn to scale and show following:
   1. CMU joints, horizontal and vertical.
   2. Wall openings.
   3. Steel beams or joints bearing on wall.
   4. Vertical cell reinforcing bars and bar size. See Drawings.
   5. Locations of bond beams and bond beam reinforcing.
   6. Locations of horizontal joint reinforcing.

1.05 QUALITY ASSURANCE

A. Masonry construction and materials shall conform to requirements of "Specifications for Masonry Structures (ACI 530.1/ASCE 6/TMS 602)," published by ACI.

B. Testing laboratories:
   1. Special Inspector will retain services of qualified independent testing laboratory. Responsibilities of testing laboratory will include:
      a. Field sampling and testing of mortar and grout.
      b. Obtain, make samples, and trial batches of mortar and grout (if required) and perform laboratory and field testing specified.
      c. Special Inspection in accordance with IBC 1704.5 for portions of CMU construction identified on Drawings as requiring Special Inspection.
      d. Provide reports to Special Inspector giving information on inspections, materials, design mixes, testing performed and test results.
      e. Reports shall indicate whether materials meet specifications.
      f. Bind reports in one volume at end of Project and give 2 copies to Owner.
   2. Contractor shall retain services of qualified independent testing laboratory. Responsibilities of testing laboratory shall include:
      a. Field sampling and testing of mortar and grout.
      b. Obtain, make samples, and trial batches of mortar and grout (if required) and perform laboratory and field testing specified.
      c. Provide reports to Owner giving information on inspections, materials, design mixes, and testing performed and test results.
      d. Reports shall indicate whether materials meet specifications.
      e. Bind reports in one volume at end of Project and give 2 copies to Owner.

1.06 STORAGE

A. Cement and lime: Keep clean, dry, free of contact with ground and protect from weather damage.

B. Aggregate: Stockpile on clean, noncontaminating surface.

1.07 ENVIRONMENTAL REQUIREMENTS

A. At temperatures below 40°F (4°C), heat, but do not scorch, sand; heat mixing water to not over 160°F (71°C) and keep mortar and grout between 40°F (4°C) and 120°F (49°C). Maintain temperature of mortar and grout above freezing.

B. When mean daily air temperature is 40°F (4°C) or below, completed masonry shall be protected in accordance with Section 04 20 00.

PART 2 PRODUCTS

2.01 MATERIALS - GENERAL

A. Water: Potable, clean, free from deleterious amounts of oil, acid, alkali, and organic matter.

B. Do not use admixtures to lower freezing point.

C. Air content of mortar and grout shall not exceed 12%.

D. Use same brand of each different proprietary material throughout Project.

2.02 MORTAR

A. Proportions and strength: ASTM C270 “Proportion Specifications.” Proportions shall be as indicated in Table 1.

Table 1				
Mortar Type	Parts by Volume Portland Cement	Part by Volume Hydrated Lime	Aggregate Measured in a Damp Loose Condition	Compressive Strength, minimum (psi)
M	1	1/4	Not less than 2-1/4 and not more than 3 times sum of volumes of cements and limes used	2,500 (17.2 mPa)
S	1	Over 1/4 to 1/2		1,800 (12.4 mPa)
N	1	Over 1/2 to 1-1/4		750 (5.2 mPa)

B. Use portland cement-lime mortar. No masonry cement allowed.

C. Use no admixtures, salts, or anti-freeze compounds.

D. Use Type M for masonry work in contact with earth. Use Type S mortar for other unreinforced and reinforced masonry work. Use Type N mortar for brick and stone veneers.

E. Preblended mortar: Cementitious materials, aggregate, and admixtures shall be blended at factory under controlled conditions, and mix shall only require addition of water of job Site.

F. Mixing:
   1. Accurately measure mortar materials by volume.
   2. Mix sand, lime, and cement dry to uniform color using drum-type mixer.
   3. Add water to bring mortar to proper consistency for use.
   4. Mix for at least 3 minutes after adding water.
   5. Thoroughly clean mixer after discharging each batch.
   6. Use mortar within 2-1/2 hours after initial mixing and discard mortar not used within this time.
   7. Mortar may be retempered by adding water and remixing at any time within 2 hours after initial mixing.

G. Use same brand of each different proprietary material throughout Project.

H. Color: To be selected after award of Contract.

2.03 GROUT

A. Type: Fine or coarse, at Contractor’s option, complying with mix proportions and installation requirements of IBC.

B. Type: Fine.
   1. Conform to ASTM C476 (2,000 psi (14 mPa) minimum compressive strength).
   2. Trial mix:
      a. One part by volume of fresh, standard brand portland cement, Type I, ASTM C150.
      b. One tenth part by volume of lime putty. Lime shall be 92% hydrated lime, ASTM C207, Type S.
      c. 2-1/4 to 3 parts by volume of fine aggregate, ASTM C404.

C. Type: Coarse.
   1. Conform to ASTM C476 (2,000 psi (14 mPa) minimum compressive strength).
   2. Trial mix:
      a. One part by volume of fresh, standard brand portland cement, Type I, ASTM C150.
      b. One tenth part by volume of lime putty. Lime shall be 92% hydrated lime, ASTM C207, Type S.
      c. 2-1/4 to 3 parts by volume of fine aggregate, ASTM C404, plus 1 to 2 parts by volume of coarse aggregate, ASTM C404.

2.04 REINFORCEMENT

A. Manufacturers and products listed are for reference purposes. Equivalent products by other manufacturers are acceptable.

B. Reinforcing bars: Deformed, 60,000 psi (414 mPa) minimum yield strength conforming to ASTM A706 Grade 60.

2.05 ACCESSORIES

A. Control joints: Preformed rubber material; RS series by Hohmann and Barnard.

B. Joint filler: "Polyseal" precompressed self-expanding polyurethane foam impregnated sealant tape, adhesive on one side, sized to suit joint conditions, by Sandell Manufacturing Co., or equal.

C. Building paper: Asphalt-saturated felt.

D. Weep holes: “QV Quadro-Vent” by Hohmann and Barnard, or equal. Size to fit vertical brick joints.

PART 3 EXECUTION

3.01 MIXING MORTAR AND GROUT

A. Conform to ASTM C270 for mortar and ASTM C476 for grout, except as otherwise specified herein.

B. Accurately measure materials, using mechanical measuring device or other method that will consistently maintain specified proportions by volume.

C. Mix mortar and grout with a maximum amount of water consistent with satisfactory workability.

D. Mix in drum-type mixer for at least 3 minutes and not more than 5 minutes. Mortar or grout that has stiffened due to evaporation of water shall be retempered by adding water as frequently as needed to restore required consistency and shall be used and placed in final position within 2-1/2 hours after initial mixing. Empty drum completely before starting new batch.

3.02 REINFORCEMENT

A. Place reinforcing bars supported and secured against displacement. Maintain position within 1/2" (13 mm) of true dimension.

3.03 LINTELS AND BOND BEAMS

A. Construct masonry lintels and bond beams in accordance with details shown on Drawings. Maintain minimum 8" (200 mm) bearing on each side of opening.

B. Bond beams shall be continuous except where shown on Drawings. At control joints and expansion joints one side of reinforcing steel shall be installed in plastic conduit to allow for slippage.

C. Use reinforcing bars of one-piece lengths only.

D. Place and consolidate grout fill without disturbing reinforcing.

E. Allow lintels to reach 3,000 psi (20.7 mPa) compressive strength before removing temporary supports.

F. At bearing points, fill wall masonry cores with grout minimum 12" (300 mm) from opening.

3.04 CONTROL JOINTS

A. Install resilient control joint in continuous lengths. Heat or solvent weld butt and corner joints in accordance with manufacturer's instructions. See Drawings for details.

B. Seal exposed sides of control joints. Size depth of joint in accordance with Section 07 90 00 for sealant performance.

C. Where control joint intersects lintel bearing, provide bond breaker.

3.05 FIELD TESTING - MORTAR AND GROUT

A. During construction, perform 1 test of mortar for each 5,000 sq ft (465 m^2) of wall area. Test in accordance with ASTM C780.

B. During construction, perform 1 test of grout for each 5,000 sq ft (465 m^2) of grouted wall area. Test in accordance with ASTM C1019.

END OF SECTION

SECTION 04 22 00 – CONCRETE UNIT MASONRY

PART 1 GENERAL

1.01 SECTION INCLUDES

A. Concrete masonry units.
B. Mortar and grout.
C. Steel reinforcing bars.
D. Miscellaneous masonry accessories.

1.02 DEFINITIONS

A. CMU(s): Concrete masonry unit(s).
B. Reinforced masonry: Masonry containing reinforcing steel in grouted cells.

1.03 ACTION SUBMITTALS

A. Product Data: For each type of product indicated.
B. Shop Drawings: For following:

1. Reinforcing Steel: Detail bending and placement of unit masonry reinforcing bars. Comply with ACI 315, "Details and Detailing of Concrete Reinforcement."

1.04 INFORMATIONAL SUBMITTALS

A. Material Certificates: For each type and size of following:

1. Masonry units.

a. Include data on material properties and material test reports substantiating compliance with requirements.

2. Cementitious materials. Include brand, type, and name of manufacturer.
3. Grout mixes. Include description of type and proportions of ingredients.
4. Reinforcing bars.

B. Mix designs: For each type of mortar and grout. Include description of type and proportions of ingredients.

1. Include test reports for mortar mixes required to comply with property specification. Test according to ASTM C109/C109M for compressive strength, ASTM C1506 for water retention, and ASTM C91 for air content.
2. Include test reports, according to ASTM C1019, for grout mixes required to comply with compressive strength requirement.

C. Cold-weather and hot-weather procedures: Detailed description of methods, materials, and equipment to be used to comply with requirements.

1.05 QUALITY ASSURANCE

A. Testing agency qualifications: Qualified according to ASTM C1093 for testing indicated.
B. Source limitations for masonry units: Obtain exposed masonry units of a uniform texture and color, or a uniform blend within ranges accepted for these characteristics, from single source from single manufacturer for each product required.
C. Source limitations for mortar materials: Obtain mortar ingredients of a uniform quality, including color for exposed masonry, from single manufacturer for each cementitious component and from single source or producer for each aggregate.
D. Masonry standard: Comply with ACI 530.1/ASCE 6/TMS 602 unless modified by requirements in Contract Documents.
E. Preconstruction testing service: Owner will engage a qualified independent testing agency to perform preconstruction testing indicated below and as indicated. Retesting of materials that fail to comply with specified requirements shall be done at Contractor's expense.

    1. Mortar test (property specification): For each mix required, according to ASTM C109/C 109M for compressive strength, ASTM C1506 for water retention, and ASTM C91 for air content.
    2. Grout test (compressive strength): For each mix required, according to ASTM C1019.

1.06 DELIVERY, STORAGE, AND HANDLING

A. Store masonry units on elevated platforms in a dry location. If units are not stored in an enclosed location, cover tops and sides of stacks with waterproof sheeting, securely tied. If units become wet, do not install until they are dry.
B. Store cementitious materials on elevated platforms, under cover, and in a dry location. Do not use cementitious materials that have become damp.
C. Store aggregates where grading and other required characteristics can be maintained and contamination avoided.
D. Store masonry accessories, including metal items, to prevent corrosion and accumulation of dirt and oil.

1.07 PROJECT CONDITIONS

A. Protection of masonry: During construction, cover tops of walls, projections, and sills with waterproof sheeting at end of each day's work. Cover partially completed masonry when construction is not in progress.
B. Extend cover minimum of 24” (600 mm) down both sides of walls and hold cover securely in place.
C. Do not apply uniform floor or roof loads for at least 12 hours and concentrated loads for at least three days after building masonry walls or columns.
D. Stain prevention: Prevent grout, mortar, and soil from staining face of masonry to be left exposed or painted. Immediately remove grout, mortar, and soil that come in contact with such masonry.

    1. Protect base of walls from rain-splashed mud and from mortar splatter by spreading coverings on ground and over wall surface.
    2. Protect sills, ledges, and projections from mortar droppings.
    3. Protect surfaces of window and door frames, as well as similar products with painted and integral finishes, from mortar droppings.
    4. Turn scaffold boards near wall on edge at end of each day to prevent rain from splashing mortar and dirt onto completed masonry.

E. Cold-weather requirements

1. Do not use frozen materials or materials mixed or coated with ice or frost. Do not build on frozen substrates. Remove and replace unit masonry damaged by frost or by freezing conditions. Comply with cold-weather construction requirements contained in ACI 530.1/ASCE 6/TMS 602.
2. Cold-weather cleaning: Use liquid cleaning methods only when air temperature is 40 deg F and higher and will remain so until masonry has dried, but not less than 7 days after completing cleaning.

F. Hot-weather requirements: Comply with hot-weather construction requirements contained in ACI 530.1/ASCE 6/TMS 602.

PART 2 PRODUCTS

2.01 DEFECTIVE UNITS

A. Referenced masonry unit standards may allow a certain percentage of units to contain chips, cracks, or other defects exceeding limits stated in standard. Do not use units where such defects will be exposed in completed Work.

2.02 CONCRETE MASONRY UNITS

A. Shapes: Provide shapes indicated and as follows, with exposed surfaces matching exposed faces of adjacent units unless otherwise indicated.

1. Provide special shapes for lintels, corners, jambs, movement joints, headers, bonding, and other special conditions.
2. Provide square-edged units for outside corners unless otherwise indicated.

B. CMUs: ASTM C90.

1. Unit compressive strength: Provide units with minimum average net-area compressive strength of 2,150 psi.
2. Density classification: Normal weight unless otherwise indicated.
3. Size (width): Manufactured to dimensions 3/8” (10 mm) less than nominal dimensions.
4. Exposed faces: Provide color and texture matching range represented by Engineer's sample.

2.03 MASONRY LINTELS

A. Prefabricated or built-in-place masonry lintels made from bond beam CMUs with reinforcing bars placed as indicated and filled with coarse grout.
B. Cure precast lintels before handling and installing.
C. Temporarily support built-in-place lintels until cured.

2.04 MORTAR AND GROUT MATERIALS

A. Portland cement: ASTM C150, Type I or II, except Type III may be used for cold-weather construction. Provide natural color or white cement as required to produce mortar color indicated.

B. Hydrated lime: ASTM C207, Type S.
C. Aggregate for mortar: ASTM C144. For mortar that is exposed to view, use washed aggregate consisting of natural sand or crushed stone.
D. Aggregate for grout: ASTM C404.
E. Cold-weather admixture:

1. Nonchloride, noncorrosive, accelerating admixture complying with ASTM C494/C494M, Type C, and recommended by manufacturer for use in masonry mortar of composition indicated.
2. Manufacturers:
   a. The Euclid Chemical Company "Accelguard 80."
   b. Grace Construction Products, W. R. Grace & Co., Conn. "Morset."
   c. Sonneborn Products, BASF Aktiengesellschaft "Trimix-NCA."

F. Water: Potable.

2.05 REINFORCEMENT

A. Uncoated steel reinforcing bars: ASTM A615/A615M or ASTM A996/A996M, Grade 60.

2.06 MISCELLANEOUS MASONRY ACCESSORIES

A. Reinforcing bar positioners:
1. Wire units designed to fit into mortar bed joints spanning masonry unit cells and hold reinforcing bars in center of cells.
2. Units shall be formed from 0.148" (4 mm) steel wire, hot-dip galvanized after fabrication.
3. Provide units designed for number of bars indicated.
4. Manufacturer:
   a. Dayton Superior Corporation, Dur-O-Wal Division; D/A 810, D/A 812 or D/A 817.
   b. Heckmann Building Products Inc. No. 376 rebar positioner.
   c. Hohmann & Barnard, Inc.; #RB or #RB-twin rebar positioner.
   d. Wire-Bond "O-Ring" or "Double O-Ring" rebar positioner.

2.07 MORTAR AND GROUT MIXES

A. Do not use admixtures, including pigments, air-entraining agents, accelerators, retarders, water-repellent agents, antifreeze compounds, or other admixtures unless otherwise indicated.

1. Do not use calcium chloride in mortar or grout.
2. Use portland cement-lime mortar unless otherwise indicated.
3. Add cold-weather admixture (if used) at same rate for all mortar that will be exposed to view, regardless of weather conditions, to ensure that mortar color is consistent.

B. Mortar for unit masonry: Comply with ASTM C270. Provide following types of mortar for applications stated unless another type is indicated or needed to provide required compressive strength of masonry.

1. For reinforced masonry, use Type S.

C. Grout for unit masonry: Comply with ASTM C476.

1. Use grout of type indicated or, if not otherwise indicated, of type (fine or coarse) that will comply with Table 1.15.1 in ACI 530.1/ASCE 6/TMS 602 for dimensions of grout spaces and pour height.
2. Proportion grout in accordance with ASTM C476, Table 1 or paragraph 4.2.2 for specified 28-day compressive strength indicated, but not less than 2,000 psi (13,800 kPa).
3. Provide grout with a slump of 8 to 11" as measured according to ASTM C143/C143M.

PART 3 EXECUTION

3.01 EXAMINATION

A. Examine conditions, with Installer present, for compliance with requirements for installation tolerances and other conditions affecting performance of Work.

1. For record, prepare written report, endorsed by Installer, listing conditions detrimental to performance of work.
2. Verify that foundations are within tolerances specified.
3. Verify that reinforcing dowels are properly placed.

B. Proceed with installation only after unsatisfactory conditions have been corrected.

3.02 INSTALLATION, GENERAL

A. Use full-size units without cutting if possible. If cutting is required to provide a continuous pattern or to fit adjoining construction, cut units with motor-driven saws; provide clean, sharp, unchipped edges. Allow units to dry before laying unless wetting of units is specified. Install cut units with cut surfaces and, where possible, cut edges concealed.

3.03 TOLERANCES

A. Dimensions and locations of elements:

1. Dimensions in cross section or elevation: Do not vary by more than +1/2" (+13 mm) or -1/4" (-6 mm).
2. Location of elements in plan: Do not vary from that indicated by more than ±1/2" (±13 mm).
3. Location of elements in elevation: Do not vary from that indicated by more than ±1/4" (±6 mm) in story height or 1/2" (13 mm) total.

B. Lines and levels:

1. Bed joints and top surfaces of bearing walls: Do not vary from level by more than 1/4" in 10'
(6 mm in 3 m), or 1/2" (13 mm) maximum.
2. Conspicuous horizontal lines, such as lintels, and sills: Do not vary from level by more than 1/8" in 10' (3 mm in 3 m), 1/4" in 20' (6 mm in 6 m), or 1/2" (13 mm) maximum.
3. Vertical lines and surfaces: Do not vary from plumb by more than 1/4" in 10' (6 mm in 3 m), 3/8" in 20' (10 mm in 6 m), or 1/2" (13 mm) maximum.
4. Conspicuous vertical lines, such as external corners, door jambs, reveals, and expansion and control joints: Do not vary from plumb by more than 1/8" in 10' (3 mm in 3 m), 1/4" in 20' (6 mm in 6 m), or 1/2" (13 mm) maximum.

5. Lines and surfaces: Do not vary from straight by more than 1/4” in 10’ (6 mm in 3 m), 3/8” in 20’ (10 mm in 6 m), or 1/2” (13 mm) maximum.
6. Vertical alignment of exposed head joints: Do not vary from plumb by more than 1/4” in 10’ (6 mm in 3 m), or 1/2” (13 mm) maximum.

C. Joints:

1. For bed joints, do not vary from thickness indicated by more than ±1/8” (±3 mm), with maximum thickness limited to 1/2” (13 mm).
2. For exposed bed joints, do not vary from bed-joint thickness of adjacent courses by more than 1/8” (3 mm).
3. For exposed head joints, do not vary from thickness indicated by more than ±1/8” (±3 mm).

3.04 LAYING MASONRY WALLS

A. Lay out walls in advance for accurate spacing of surface bond patterns with uniform joint thicknesses and for accurate location of openings, movement-type joints, returns, and offsets. Avoid using less-than-half-size units, particularly at corners, jambs, and, where possible, at other locations.
B. Bond pattern for exposed masonry: Unless otherwise indicated, lay exposed masonry in running bond; do not use units with less than nominal 4” (100 mm) horizontal face dimensions at corners or jambs.
C. Stopping and resuming work: Stop work by racking back units in each course from those in course below; do not tooth. When resuming work, clean masonry surfaces that are to receive mortar before laying fresh masonry.
D. Built-in work: As construction progresses, build in items specified in this and other Sections. Fill in solidly with masonry around built-in items.
E. Where built-in items are to be embedded in cores of hollow masonry units, place a layer of metal lath, wire mesh, or plastic mesh in joint below and rod mortar or grout into core.
F. Fill cores in hollow CMUs with grout 24” (600 mm) under bearing plates, beams, lintels, posts, and similar items unless otherwise indicated.

3.05 MORTAR BEDDING AND JOINTING

A. Lay hollow CMUs as follows:

1. Face shells fully bedded in mortar and with head joints of depth equal to bed joints.
2. Webs fully bedded in mortar in grouted masonry.

B. Tool exposed joints slightly concave when thumbprint hard, using a jointer larger than joint thickness unless otherwise indicated.

3.06 EXPANSION JOINTS

A. Install expansion joint materials in unit masonry as indicated and as masonry progresses. Do not allow materials to span expansion joints without provision to allow for in-plane wall or partition movement.

3.07 LINTELS

A. Provide masonry lintels where shown and where openings of more than 24” (600 mm) are shown without structural steel or other supporting lintels.

3.08 REINFORCED UNIT MASONRY INSTALLATION

A. Temporary formwork and shores: Construct formwork and shores as needed to support reinforced masonry elements during construction.

1. Construct formwork to provide shape, line, and dimensions of completed masonry as indicated. Make forms sufficiently tight to prevent leakage of mortar and grout. Brace, tie, and support forms to maintain position and shape during construction and curing of reinforced masonry.
2. Do not remove forms and shores until reinforced masonry members have hardened sufficiently to carry their own weight and other loads that may be placed on them during construction.

B. Placing reinforcement: Comply with requirements in ACI 530.1/ASCE 6/TMS 602.
C. Grouting: Do not place grout until entire height of masonry to be grouted has attained enough strength to resist grout pressure.

1. Comply with requirements in ACI 530.1/ASCE 6/TMS 602 for cleanouts and for grout placement, including minimum grout space and maximum pour height.
2. Limit height of vertical grout pours to not more than 60”

3.09 FIELD QUALITY CONTROL

A. Testing and Inspecting: Owner will engage special inspectors to perform tests and inspections indicated and prepare reports. Allow inspectors access to scaffolding and work areas, as needed to perform tests and inspections. Retesting of materials that fail to meet specified requirements shall be done at Contractor's expense.

3.10 REPAIRING, POINTING, AND CLEANING

A. Remove and replace masonry units that are loose, chipped, broken, stained, or otherwise damaged or that do not match adjoining units. Install new units to match adjoining units; install in fresh mortar, pointed to eliminate evidence of replacement.
B. Pointing: During tooling of joints, enlarge voids and holes, except weep holes, and completely fill with mortar. Point up joints, including corners, openings, and adjacent construction, to provide a neat, uniform appearance. Prepare joints for sealant application, where indicated.
C. In-progress cleaning: Clean unit masonry as work progresses by dry brushing to remove mortar fins and smears before tooling joints.
D. Final cleaning: After mortar is thoroughly set and cured, clean exposed masonry as follows:

1. Remove large mortar particles by hand with wooden paddles and nonmetallic scrape hoes or chisels.
2. Test cleaning methods on sample wall panel; leave one-half of panel uncleansed for comparison purposes. Obtain Engineer's approval of sample cleaning before proceeding with cleaning of masonry.

3. Protect adjacent stone and nonmasonry surfaces from contact with cleaner by covering them with liquid strippable masking agent or polyethylene film and waterproof masking tape.
4. Wet wall surfaces with water before applying cleaners; remove cleaners promptly by rinsing surfaces thoroughly with clear water.
5. Clean concrete masonry by cleaning method indicated in NCMA TEK 8-2A applicable to type of stain on exposed surfaces.

3.11 MASONRY WASTE DISPOSAL

A. Remove excess clean masonry waste that cannot be used as fill, as described above, and other masonry waste, and legally dispose of off Owner's property.

END OF SECTION

SECTION 05 12 13 – PIPE AND TUBE RAILINGS

PART 1 - GENERAL

1.1 SUMMARY

A. Section Includes:
   1. Steel railings.

1.2 ACTION SUBMITTALS

A. Product Data:
   1. Non-shrink, non-metallic grout.
   2. Paint and finish products.

B. Shop Drawings: Include plans, elevations, sections, details, and attachments to other work.

C. Samples: For each type of exposed finish.

1.3 INFORMATIONAL SUBMITTALS

A. Welding certificates.

B. Product Test Reports: For tests on railings performed by a qualified testing agency, in accordance with ASTM E894 and ASTM E935.

1.4 QUALITY ASSURANCE

A. Welding Qualifications: Qualify procedures and personnel in accordance with the following:
   1. AWS D1.1/D1.1M, "Structural Welding Code - Steel."

PART 2 - PRODUCTS

2.1 METALS, GENERAL

A. Metal Surfaces, General: Provide materials with smooth surfaces, without seam marks, roller marks, rolled trade names, stains, discolorations, or blemishes.

B. Brackets, Flanges, and Anchors: Cast or formed metal of same type of material and finish as supported rails unless otherwise indicated.
   1. Provide type of bracket with predrilled hole for exposed bolt anchorage and that provides 1-1/2-inch (38-mm) clearance from inside face of handrail to finished wall surface.

2.2 STEEL RAILINGS

A. Tubing: ASTM A847.

B. Pipe: ASTM A53/A53M, Type F or Type S, Grade A, Standard Weight (Schedule 40), unless another grade and weight are required by structural loads.
   1. Provide galvanized finish for exterior installations and where indicated (if round pipe sections are used).

C. Plates, Shapes, and Bars: ASTM A36.

2.3 FASTENERS

A. Fastener Materials:
   1. Hot-Dip Galvanized Railing Components: Type 304 stainless steel or hot-dip zinc-coated steel fasteners complying with ASTM A153/A153M or ASTM F2329/F2329M for zinc coating.

B. Post-Installed Anchors: Fastener systems with working capacity greater than or equal to the design load, according to an evaluation report acceptable to authorities having jurisdiction, based on ICC-ES AC193.

2.4 MISCELLANEOUS MATERIALS

A. Welding Rods and Bare Electrodes: Select in accordance with AWS specifications for metal alloy welded.

B. Etching Cleaner for Galvanized Metal: Complying with MPI#25.

C. Galvanizing Repair Paint: High-zinc-dust-content paint, complying with SSPC-Paint 20 and compatible with paints specified to be used over it.

D. Non-shrink, Non-metallic Grout: Factory-packaged, non-staining, noncorrosive, nongaseous grout, complying with ASTM C1107/C1107M. Provide grout specifically recommended by manufacturer for interior and exterior applications.

2.5 FABRICATION

A. Cut, drill, and punch metals cleanly and accurately.
   1. Remove burrs and ease edges to a radius of approximately 1/32 inch (1 mm) unless otherwise indicated.
   2. Remove sharp or rough areas on exposed surfaces.

B. Form work true to line and level with accurate angles and surfaces.

C. Welded Connections: Cope components at connections to provide close fit, or use fittings designed for this purpose. Weld all around at connections, including at fittings.
   1. Use materials and methods that minimize distortion and develop strength and corrosion resistance of base metals.
   2. Obtain fusion without undercut or overlap.
   3. Remove flux immediately.
   4. At exposed connections, finish exposed welds to comply with NOMMA's "Voluntary Joint Finish Standards" for Finish #2 welds; good appearance, completely sanded joint, some undercutting and pinholes okay.

D. Bend members in jigs to produce uniform curvature for each configuration required. Maintain cross section of member throughout entire bend without buckling, twisting, cracking, or otherwise deforming exposed surfaces of components.

E. Close exposed ends of hollow railing members with prefabricated cap and end fittings of same metal and finish as railings.

F. Provide wall returns at ends of wall-mounted handrails unless otherwise indicated. Close ends of returns unless clearance between end of rail and wall is 1/4 inch (6 mm) or less.

G. Brackets, Flanges, Fittings, and Anchors: Provide wall brackets, flanges, miscellaneous fittings, and anchors to interconnect railing members to other work unless otherwise indicated.

2.6 STEEL AND IRON FINISHES

A. Galvanized Railings:
   1. Hot-dip galvanize steel railings, including hardware, after fabrication.
   2. Comply with ASTM A123/A123M for hot-dip galvanized railings.
   3. Comply with ASTM A153/A153M for hot-dip galvanized hardware.

B. For galvanized railings, provide hot-dip galvanized fittings, brackets, fasteners, sleeves, and other ferrous components.

C. Preparing Galvanized Railings for Shop Priming: After galvanizing, thoroughly clean railings of grease, dirt, oil, flux, and other foreign matter, and treat with etching cleaner.
   1. Comply with SSPC-SP 16.

PART 3 - EXECUTION

3.1 INSTALLATION, GENERAL

A. Perform cutting, drilling, and fitting required for installing railings.
   1. Fit exposed connections together to form tight, hairline joints.
   2. Install railings level, plumb, square, true to line; without distortion, warp, or rack.
   3. Set railings accurately in location, alignment, and elevation; measured from established lines and levels.
   4. Do not weld, cut, or abrade surfaces of railing components that are coated or finished after fabrication and that are intended for field connection by mechanical or other means without further cutting or fitting.
   5. Set posts plumb within a tolerance of 1/16 inch in 3 feet.
   6. Align rails so variations from level for horizontal members and variations from parallel with rake of steps and ramps for sloping members do not exceed 1/4 inch in 12 feet.

B. Control of Corrosion: Prevent galvanic action and other forms of corrosion by insulating metals and other materials from direct contact with incompatible materials.

3.2 ANCHORING POSTS

A. Anchor posts to concrete or masonry surfaces with a post-installed anchors through a base plate as detailed in the contract drawings. as required by conditions, connected to posts and to metal supporting members.

3.3 ATTACHING RAILINGS

A. Railings and pickets to be shop welded to posts.

3.4 CLEANING

A. Galvanized Surfaces: Clean field welds, bolted connections, and abraded areas, and repair galvanizing to comply with ASTM A780/A780M.

END OF SECTION

SECTION 05 50 00 – METAL FABRICATIONS

PART 1 GENERAL

1.01 SECTION INCLUDES

A. Other steel, iron, and metal items.

B. Steel Framing

C. Miscellaneous metal.

D. Welding materials.

E. Adhesive anchors.

F. Masonry anchors.

G. Mechanical Anchors

H. Welded studs.

I. Handrails, guards, and toe plates.

J. Self-closing gates.

K. Ladders.

L. Grating.

M. Stair treads.

N. Shop painting.

1.02 WORK BY OTHERS

A. Structural steel installation.

1.03 INFORMATIONAL SUBMITTALS

A. Product Data: List of manufactured materials proposed, identifying manufacturer and type.

B. Test Reports: ICC-ES evaluation reports for post-installed adhesive anchors, mechanical anchors, masonry anchors provided to verify conformance to specifications.

1.04 ACTION SUBMITTALS

A. Shop Drawings for other steel, iron or metal items as defined in AISC Code of Standard Practice.
   1. Indicate profiles, sizes, connection attachments, reinforcing, anchorage, size and type of fasteners, and accessories. Include erection drawings, elevations, and details where applicable.
   2. Indicate welded connections using standard AWS A2.0 welding symbols.
   3. Indicate net weld lengths.

1.05 QUALITY ASSURANCE

A. Perform welding in accordance with AWS D1.1 "Structural Welding Code" and AWS D1.2 "Structural Welding Code - Aluminum," as applicable.

B. Perform fabrication in accordance with AISC 303-10 “Code of Standard Practice for Steel Buildings and Bridges”.

C. Perform erection in accordance with AISC 303-10 “Code of Standard Practice for Steel Buildings and Bridges”.

1.06 DELIVERY, STORAGE, AND HANDLING

A. Adhere to product storage and handling requirements.

B. Accept metal fabrications on site in labeled shipments. Inspect for damage.

C. Protect metal fabrications from damage by exposure to weather.

PART 2 PRODUCTS

2.01 MATERIALS

A. Steel plates and shapes:
1. Steel Wide Flange: ASTM A992
2. Channels and angles: ASTM A36/A36M.
3. Round hollow structural sections: ASTM A500/A500M, Grade B.
4. Rectangular hollow structural sections: ASTM A500/A500M, Grade B.
5. Structural pipe: ASTM A53/A53M, Grade B.
6. Structural plates and bars: ASTM A36/A36M.

B. Galvanizing: ASTM A123/A123M.

C. Standard bolts: ASTM A307.

D. High-strength bolts: Heavy hex, structural type. ASTM A325; Type 1, hot-dipped galvanized.

E. Nuts:
1. ASTM A563 (ASTM A563M) Heavy hex type.
2. Finish: Hot-dipped galvanized.
3. Washers: ASTM F436 (ASTM F436M); Type 1, Furnish clipped or beveled washers where required.
4. Finish Hot dipped galvanized.

2.02 WELDING MATERIALS

A. Steel: AWS D1.1; type as required for materials being welded.

2.03 ADHESIVE ANCHORS

A. Threaded rods anchored in concrete with 2-component blend of resin and hardener. Filler material may be mixed with resin and hardener in accordance with manufacturer's directions.

B. Anchor rod system shall have ICC approval for use in cracked concrete and for seismic conditions and shall have passed mandatory creep tests requirements of AC 308.

C. Threaded rod type:
1. All-threaded.

2. Standard: ASTM A36/A36M, galvanized. Use unless indicated otherwise on Drawings.
3. High-strength: ASTM A193/A193M, Grade B7, galvanized.
4. Stainless steel: ASTM F593 (AISI 304).

D. Manufacturer: "HIT-HY 200", "HIT RE-500 V3" System" by Hilti; "SET-XP" by Simpson Strong Tie, or equal.

2.04 MASONRY ANCHORS

A. Solid-core masonry anchors (anchored in grout-filled or solid masonry):
1. Use unless masonry anchors are noted on Drawings as "Adhesive Hollow Masonry Anchors."
2. Type:
a. Adhesive anchor: "HIT-HY-70 Adhesive System" by Hilti, or equal.
1) Standard (use unless indicated otherwise on Drawings): ASTM A36/A36M, galvanized.
2) Stainless steel: ASTM F593 (AISI 304).
b. Mechanical expansion anchor: "Kwik Bolt 3" by Hilti, or equal.
1) Standard (use unless indicated otherwise on Drawings): Hot-dip galvanized steel.
2) Stainless steel.
3. Fill hollow core masonry cells with grout where anchors will be installed.

B. Adhesive hollow masonry anchors:
1. Manufacturer: "HIT-HY-70 Adhesive System" by Hilti with screen; or equal.
a. Standard rod (use unless indicated otherwise on Drawings): ASTM A36/A36M, galvanized.
b. Stainless steel rod: Threaded ASTM F593 (AISI 304)
2. Use for nonstructural anchoring of light weight equipment or where specifically identified for use on Drawings. Resulting anchor loads shall be less than manufacturer's allowable loads.

2.05 MECHANICAL ANCHORS

A. Expansion anchors in concrete:
1. Type:
a. Mechanical expansion anchor "Kwik Bolt TZ" by Hilti, or equal
b. Stainless steel

2.06 WELDED STUDS

A. Material: ASTM A108.

B. Automatically end weld in accordance with manufacturer's recommendations.

C. Manufacturer: "Nelson Fluxed Headed Anchor Studs," by Nelson Stud Welding Division, or equal.

2.07 STEEL HANDRAILS AND GUARDRAILS

A. Material: ASTM A53/A53M, Grade B or ASTM A501.

B. Use steel pipe for rails and uprights.

C. Connections: Weld and grind smooth.

D. Bend pipe at corners; do not miter pipe.

E. Provide removable rails where shown.

F. Conform to details shown on Drawings.

2.08 SELF-CLOSING GATES

A. Type: Prefabricated, stainless steel or galvanized steel gate with stainless steel spring to automatically close gate; 12" (300 mm) high (minimum) by required length.

B. Adjustable for proper fit-up, to accommodate typical construction tolerances of guardrail posts.

C. Gate or gate supports shall not extend into clear guardrail opening when gate is opened beyond 90º.

2.09 STEEL LADDERS

A. Conform to details shown on Drawings.

B. Provide self-closing gates with ladders unless specifically noted otherwise on Drawings.

C. Rung type:
   1. Steel, 4-row, 13-gage (2.3 mm) tread-grip (with end notching for fit-up with ladders utilizing pipe rail).
   2. Manufacturer: Morton Manufacturing Co., or equal.

D. Provide safety cages as shown on Drawings.

2.10 STEEL GRATING

A. Use welded rectangular grating conforming to standards of NAAMM.

B. Size of bearing bars: 1-1/4" x 3/16" (32 mm x 4.8 mm) at 1-3/16" (30 mm) oc, unless shown otherwise.

C. Cross bars: Rectangular cross-section, flush at top with bearing bars and spaced 4" (100 mm) oc.

D. Make sections removable; limit weight of each section to not more than 150 lb (68 kg).

E. Provide saddle clip fasteners for each removable section of floor bar grating supported on structural steel members.

F. Provide edge binding at exposed edges and as required to stiffen irregular sections. Provide openings shown. Provide joints at center of openings where possible to permit removal of grating around items passing through.

G. Grating, plates welded to grating, and grating saddle clips shall be galvanized.

H. Paint grating using manufacturer's standard factory prime coats except that bituminous base paints shall not be used.

2.11 STAIR GRATING TREADS

A. Steel:
   1. Prefabricated standard galvanized steel grating with galvanized checkered plate abrasive nosing; grating bar size: 1" x 3/16" (25 mm x 5 mm) unless indicated otherwise on Drawings.
   2. Provide abrasive nosing at head of each steel stairway at grating floor surface.
   3. Provide galvanized bolts for anchoring treads to stringers.

2.12 FACTORY FINISHING

A. Conform to requirements of Section 09 90 00.

PART 3 EXECUTION

3.01 ERECTION

A. Erect and anchor structural steel framing to concrete foundation elements as indicated on the drawings.

B. Anchor handrails, guardrails, ladders, and miscellaneous items securely to structural steel framing, concrete or masonry.

C. Fasten each section of grating to structural steel.

D. Bolt stair treads to stair stringers.

E. Field weld studs to members if required by state or local regulations. In absence of regulations, Contractor may exercise option as to attachment of studs in shop or field.

F. Install items plumb and level, accurately fitted, free from distortion or defects.

G. Make provisions for erection stresses. Install temporary bracing to maintain alignment, until permanent bracing and attachments are installed.

H. Field weld components where indicated on Drawings.

I. Perform field welding and inspect welds in accordance with AWS D1.1.

3.02 PREPARATION

A. Clean and strip primed steel and aluminum items to bare metal where site welding is required.

B. Supply setting templates for metal items required to be cast into concrete or embedded in masonry.

3.03 ADHESIVE ANCHORS AND ADHESIVE MASONRY ANCHORS

A. Install in strict accordance with manufacturer's written instructions.

B. Perform work using manufacturer's standard equipment including adhesive cartridges, dispensing guns, mixer tubes and extensions, brush, and air nozzle for compressed air

cleaning of holes. Contractor shall possess equipment at site prior to start of installation and workers shall demonstrate knowledge of procedure for installing anchors prior to installation.

C. Use hammer drill except where holes are within 6" (150 mm) of edge of concrete or masonry, core drill holes.

D. Inspect existing concrete and masonry at anchor locations for soundness. Report to Engineer cracked, deteriorated or weak concrete or masonry detected from drilling operation or from inspection.

3.04 MECHANICAL ANCHORS AND MECHANICAL MASONRY ANCHORS

A. Install in strict accordance with manufacturer’s written instructions.

B. Use manufacturer’s installation equipment.

3.05 SELF-CLOSING GATE

A. Fasten gate securely to guardrail according to manufacturer's recommendations.

B. Gate: Properly aligned and operable upon completion of installation.

3.06 FIELD PAINTING

A. Apply one field coat of primer to cleaned surfaces of bolts, new welds and abrasions to shop coat after erection.

B. Do not paint aluminum, stainless steel, or galvanized steel work.

C. After erection, repair hot-dip galvanized coatings in accordance with ASTM A780. This includes surfaces where shop-applied galvanized coatings have been damaged, removed, or omitted.

D. Field finish painting: As specified in Section 09 90 00.

END OF SECTION

SECTION 07 11 00 - DAMPPROOFING

PART 1 GENERAL

1.01 SECTION INCLUDES

A. Cold-applied asphalt bituminous dampproofing.

1.02 RELATED REQUIREMENTS

A. Section 07 21 00 – Thermal Insulation: Board insulation protective cover.

1.03 ENVIRONMENTAL REQUIREMENTS

A. Maintain ambient temperatures above 40°F (4°C) for 24 hours before and during application until membrane has cured.

PART 2 PRODUCTS

2.01 MANUFACTURERS

A. BASF.

B. Karnak Corporation.

C. W. R. Meadows, Inc.

D. Products referenced in this Section are manufactured by BAS, unless specified otherwise.

2.02 MATERIALS

A. “MasterSeal 610” non-fibered asphalt emulsion.

B. Primer: Type recommended by dampproofing manufacturer for substrate condition.

C. Locations:
1. Basement exterior wall surfaces below finish grade.
2. Wet wells.
3. Below floor / grade tunnels.
4. Vertical foundation surfaces.

PART 3 EXECUTION

3.01 EXAMINATION

A. Verify substrate surfaces are durable, free of frozen matter, loose particles, cracks, pits, rough projections, and foreign matter detrimental to adhesion or application of dampproofing system.

B. Verify items which penetrate surfaces to receive dampproofing are securely installed.

C. Do not apply dampproofing to damp, frozen, dirty, or dusty surfaces.

D. Beginning of application means acceptance of substrate.

3.02 PREPARATION

A. Protect adjacent surfaces not designated to receive dampproofing.

B. Clean and prepare surfaces to receive dampproofing in accordance with manufacturer's instructions.

C. Do not apply dampproofing to surfaces unacceptable to manufacturer or applicator.

3.03 APPLICATION

A. Fill cracks, crevices, and grooves making sure coating is continuous and free from breaks and pinholes.

B. Seal items projecting through dampproofing surface with mastic. Seal watertight.

C. Prime surfaces in accordance with manufacturer's instructions.

D. Apply cold bitumen by roller or spray application.

E. Apply bitumen in accordance with manufacturer's instructions.

F. Apply dampproofing coating at a continuous, uniform rate of 8 to 9 gallons per 100 square feet (30 to 34 liters per 9 square meters.).

G. Apply from 2" (50 mm) below finish grade elevation to top of footings.

3.04 PROTECTION

A. In event of rain, provide protection while application is in progress and until coating has set.

B. Do not backfill within 48 hours after application. When possible, backfill within a 7-day period.

C. Protect membrane from damage by adhering insulation board over dampproofing surface. Neatly fit protective insulation boards tight around pipe and other projections.

END OF SECTION

SECTION 07 21 00 – THERMAL INSULATION

PART 1 GENERAL

1.01 SECTION INCLUDES

A. Rigid board insulation.

B. Pre-Engineered Metal Building Insulation Liner System.

C. Mineral Wool Insulation.

D. Adhesive materials and accessories.

1.02 RELATED REQUIREMENTS

A. Section 13 34 19 - Metal Building Systems.

1.03 DELIVERY, STORAGE, AND HANDLING

A. Delivery: Deliver materials to site in original sealed wrapping bearing manufacturer's name and brand designation, specification number, type, grade, R-value, and class. Store and handle to protect from damage. Do not allow insulation materials to become wet, soiled, crushed, or covered with ice or snow. Comply with manufacturer's recommendations for handling, storing, and protecting of materials before and during installation.

B. Storage: Inspect materials delivered to the site for damage; unload and store out of weather in manufacturer's original packaging. Store only in dry locations, not subject to open flames or sparks, and easily accessible for inspection and handling.

1.04 DESIGN REQUIREMENTS

A. Insulating system shall have a continuous vapor barrier inside of building purlins, girts, and insulation to provide complete isolation from inside conditioned air.

1.05 SUBMITTALS

A. Submit under provisions of Section 01 33 00.

B. Manufacturer's data sheets on each product to be used, including:
   1. Preparation instructions and recommendations.
   2. Storage and handling requirements and recommendations.
   3. Installation instructions.

C. Shop Drawings: Indicate locations of connections and attachments, general details, anchorages and method of anchorage and installation.

D. Verification Samples: For each finish product specified, two samples, minimum size 6” (150 mm) square or long, representing actual products required for this project.

E. Manufacturer's Certificate: Certify products meet or exceed specified requirements.

1.06 QUALITY ASSURANCE

A. Manufacturer Qualifications: Company specializing in manufacturing product systems specified in this section with minimum five years documented experience.

B. Installer Qualifications: Company specializing in performing work of this section.

C. Insulation system components to include a ten-year limited material warranty.

1.07 PROJECT CONDITIONS

A. Maintain environmental conditions (temperature, humidity, and ventilation) within limits recommended by manufacturer for optimum results. Do not install products under environmental conditions outside manufacturer's absolute limits.

1.08 SAFETY PRECAUTIONS

A. Respirators: Provide installers with dust/mist respirators, training in their use, and protective clothing approved by National Institute for Occupational Safety and Health (NIOSH)/Mine Safety and Health Administration (MSHA) in accordance with 29 CFR 1910.134.

B. Other Safety Concerns: Consider other safety concerns and measures as outlined in ASTM C930.

PART 2 PRODUCTS

2.01 INSULATION MATERIALS

A. Rigid board insulation:
   1. Type: Extruded polystyrene meeting ASTM C578, Type IV.
   2. Minimum compressive strength: 24 psi (165 kPa), ASTM D1621.
   3. Water absorption by volume: 0.1% maximum, ASTM C272.
   4. Foam blowing agent shall provide at least 90% reduction in ozone depletion potential as compared with standard CFC blowing agents and shall be certified by foam manufacturer.
   5. R-value: 5.0°F-ft^2-h/Btu per inch, minimum, at 75°F (24°C) mean temperature, ASTM C518 and warranted by manufacturer to retain at least 90% of its published R-value for 15 years.
   6. Thickness: As indicated on Drawings.
   7. Use: Where shown on Drawings.

B. Pre-Engineered Metal Building Insulation Liner System
   1. System consists of Vapor Barrier Liner Fabric, Thermal Breaks, Straps, and other devices and components in a proprietary insulation system as follows:
   2. Vapor Barrier Liner Fabric: Woven, reinforced, high-density polyethylene yarns coated on both sides with a continuous white or colored polyethylene coatings, as follows:
      a. Product complies with ASTM C1136, Types I through Type VI.
      b. Perm rating: 0.02 for fabric and for seams in accordance with ASTM E96.
      c. Flame/Smoke Properties:
         1) 25/50 in accordance with ASTM E84.
         2) Self-extinguishes with field test using matches or butane lighter.

d. Ultraviolet radiation inhibitor to minimum UVMAX® rating of 8.
e. Size and seaming: Manufactured in large custom pieces by extrusion welding from roll goods and fabricated to substantially fit defined building area with minimum practicable job site sealing.
f. Provide with factory double, extrusion welded seams. Stapled seams or heat-melted seams are not acceptable due to degradation of fabric.
g. Factory-folded to allow for rapid installation.
h. Color: White.

3. Vapor Barrier Lap Sealant: Solvent-based, Simple Saver polyethylene fabric adhesive.
4. Vapor Barrier Tape: Double-sided sealant tape 3/4" (19 mm) wide by 1/32" (.79 mm) thick.
5. Vapor Barrier Patch Tape: Single-sided, adhesive backed sealant tape 3" (76 mm) wide made from same material as Syseal® type liner fabric.
6. Thermal Breaks:
   a. 1/8" (3 mm) thick by 3" (76 mm) wide white, closed-cell polyethylene foam with pre-applied adhesive film and peel-off backing.
   b. Polystyrene Snap-R snap-on thermal blocks.
7. Straps:
   a. 100 KSI minimum yield tempered, high-tensile-strength steel.
   b. Size: Not less than 0.020" (0.50 mm) thick by 1" (25 mm) by continuous length.
   c. Primed and painted to match specified finish color on the exposed side.
   d. Color: Custom Color.
   e. High-tensile-strength stainless steel.
   f. Woven polyester plastic. Color as selected.
8. Fasteners:
   a. For light gage steel: #12 by 3/4" (19 mm) plated Tek 2 type screws with sealing washer, painted to match specified color.
   b. For heavy gage steel: #12 by 1-1/2" (38 mm) plated Tek 4 type screws with sealing washer, painted to match specified color.
   c. For wood, concrete, other materials: As recommended by manufacturer.
9. Wall Insulation Hangers: Fast-R preformed rigid hangers, 32" (813 mm) long galvanized steel strips with barbed arrows every 8" (203 mm) along its length.

C. Mineral Wool Insulation
1. ASTM C553, Type I, blankets without membrane coverings; Class A, with a flame spread of 25 or less.
2. Thermal Resistance Value (R-VALUE): R-Value must be as indicated on drawings.
3. Recycled Materials:
   a. Provide insulation materials containing the following minimum percentage of recycled material content by weight:
      1) Provide data identifying percentage of recycled content for insulation materials.
4. Prohibited Materials: Do not provide asbestos-containing materials.
5. Reduced Volatile Organic Compounds (VOC) for Insulation Materials: Provide certification of indoor air quality for insulation materials.

2.02 ADHESIVE MATERIALS

A. Adhesive: Type recommended by insulation manufacturer for application.

2.03 BLOCKING

A. Wood, metal, unfaced mineral fiber blankets in accordance with ASTM C665, Type I, or other approved materials. Use only non-combustible materials meeting the requirements of ASTM E136 for blocking around chimneys and heat producing devices.

2.04 ACCESSORIES

A. Vapor and air barrier: Translucent polyethylene film for above grade application; 10-mil thick with reinforcing mesh.

B. Nails or staples: Steel wire; electroplated or galvanized; type and size to suit application.

C. Tape: Type and size to suit application.

D. Wire mesh: Galvanized steel, hexagonal wire mesh to suit application.

E. Protective covering: As recommended by manufacturer.

F. Insulation fasteners:
   1. Impale clip type galvanized steel.
   2. Adhere to or mechanically fasten to surface to receive rigid insulation.
   3. Length to suit insulation thickness.
   4. Capable of securely and rigidly fastening insulation in place.

PART 3 EXECUTION

3.01 EXISTING CONDITIONS

A. Before installing insulation, ensure that areas that will be in contact with the insulation are dry and free of projections which could cause voids or compressed insulation. If moisture or other conditions are found that do not allow the workmanlike installation of the insulation, do not proceed but notify Contracting Officer of such conditions.

3.02 PREPARATION

A. Verify substrate and adjacent materials are dry and ready to receive insulation and adhesives.

B. Verify substrate surface is flat, free of honeycomb and fins, irregularities and materials that will impede adhesive bond.

C. Verify insulation boards are unbroken and free of damage.

D. Verify mechanical and electrical services within walls have been installed and tested.

3.03 INSTALLATION

A. Foundation perimeters:
   1. Install boards on foundation perimeter with long dimension horizontal. Place boards in method to maximize contact bedding. Stagger joints. Butt edges and ends tight to adjacent board and to protrusions.

2. Extend boards over expansion joints, one side unbonded to foundation 6" (150 mm) either side of joint.
3. Immediately following installation of insulation boards, provide protective covering over insulation that will be exposed. Protection may be either with latex coating or reinforcing mesh and stucco as recommended by insulation board manufacturer.

B. Under concrete slabs:
1. Place insulation under slabs on grade after base for slab has been compacted.
2. Prevent insulation from being displaced or damaged while placing slab.

C. Pre-Engineered Metal Building Insulation Liner System Installation - General
1. Install pre-engineered building insulation system in accordance with manufacturer's installation instructions and the approved shop drawings.
2. Prepare surfaces using the methods recommended by the manufacturer for achieving the best result for the substrate under the project conditions.
3. Install in exterior spaces without gaps or voids. Do not compress insulation.
4. Trim insulation neatly to fit spaces. Insulate miscellaneous gaps and voids.
5. Fit insulation tight in spaces and tight to exterior side of the sealed liner fabric and around mechanical and electrical services within plane of insulation.

D. Mineral Wool Insulation Installation – General
1. Insulation: Install and handle insulation in accordance with manufacturer's instructions. Keep material dry and free of extraneous materials. Any materials that show visual evidence of biological growth due to presence of moisture must not be installed on the building project. Ensure personal protective clothing and respiratory equipment is used as required. Observe safe work practices.
2. Electrical Wiring: Do not install insulation in a manner that would sandwich electrical wiring between two layers of insulation.
3. Continuity of Insulation: Install blanket insulation to butt tightly against adjoining blankets and to studs, rafters, joists, headers, and any obstructions. Provide continuity and integrity of insulation at corners, wall to ceiling joints, and roof. Avoid creating thermal bridges.
4. Cold Climate Requirement: Place insulation to the outside of pipes.
5. Sizing of Blankets: Provide only full width blankets when insulating between structural framing. Size width of blankets for a snug fit where framing members are irregularly spaced.

E. Roof Insulation Installation
1. Straps:
   a. Cut straps to length and install in the pattern and spacings indicated on shop drawings.
   b. Tension straps to required value.
2. Vapor Barrier Fabric:
   a. Install vapor barrier fabric in large one-piece custom fabricated pieces to substantially fit defined building areas with minimum practicable job site sealing.
   b. Position pre-folded fabric on the strap platform along one eave purlin.
   c. Clamp the two bottom corners at the eave and centered on the bay.
   d. Pull the other end of the pleat-folded fabric across the building width on the strap platform, pausing only at the ridge to fasten the straps and fabric in position where plane of roof changes and to release temporary fasteners on the opposite ridge purlins.

e. Once positioned, install fasteners from the bottom side at each strap/purlins intersection.
f. Trim edges and seal along the rafters.
g. Seams must be completely sealed. Stapled seams not acceptable.

3. Insulation:
   a. Unpack, and shake to a thickness exceeding the specified thickness.
   b. Ensure that cavities are filled completely with insulation.
   c. Place on the vapor barrier liner fabric without voids or gaps.
   d. Place top layer of insulation over and perpendicular to the purlins without voids or gaps, as roof sheathing is applied.
   e. Place thermal block on top of purlins.
   f. Place insulation between purlins at the required thickness for the R-value specified.
4. Seal vapor barrier fabric to the wall fabric and elsewhere as required to provide a continuous vapor barrier.

F. Wall Insulation Installation
1. Insulation:
   a. Install thermal break to exterior surface of girts as wall sheathing is applied.
   b. Position and secure Fast-R hangers to girts on the inside face of the wall sheathing.
   c. Cut insulation to required lengths to fit vertically between girts.
   d. Fluff the insulation to the full-specified thickness.
   e. Neatly position in place and secure to Fast-R hangers.
   f. Ensure that cavities are filled completely with insulation.
2. Vapor Barrier Fabric:
   a. Install vapor barrier fabric in large one-piece custom fabricated pieces to substantially fit defined building areas with minimum practicable job site sealing.
   b. Apply the vapor barrier fabric by clamping it in position over eave strap and installing fasteners through the eave strap into each roof strap, permanently clamping the wall fabric between them.
   c. Once in position, draw the vapor barrier fabric down over the column flanges to the base angle and install vertical straps along each column and 5’ (1.5 m) on center, maximum, fastening to each girt to retain system permanently in place.
   d. Seams must be completely sealed. Stapled seams not acceptable.
3. Seal wall fabric to the roof fabric, to the base angle and up the columns to provide a continuous vapor barrier.

3.04 CLEANING

A. Clean dirt or exposed sealant from the exposed vapor barrier fabric.

B. Remove scraps and debris from the site.

3.05 PROTECTION

A. Protect system products until completion of installation.

B. Repair or replace damaged products before completion of insulation system installation.

END OF SECTION

SECTION 07 26 16 – BELOW-GRADE VAPOR RETARDER

PART 1 GENERAL

1.01 SECTION INCLUDES

A. Under-slab vapor barrier.

B. Seam tape, pipe boots, and mastic for installation under concrete slabs.

1.02 RELATED REQUIREMENTS

A. Section 03 30 00 – Cast-In-Place Concrete

B. Section 07 21 00 – Thermal Insulation

1.03 INFORMATIONAL SUBMITTALS

A. Product Data:
   1. Submit manufacturer's Product Data, installation instructions, use limitations and recommendations.
   2. Submit certification of data indicating Volatile Organic Compound (VOC) content of components of below-grade vapor retarder system.

B. Samples: Submit three 8.5” x 11” (216 mm x 275 mm) samples of specified vapor retarder.

1.04 QUALITY ASSURANCE

A. Installer: Firm which has at least 3 years of experience in work of type required by this Section.

B. Materials: For each type of material required for work of this Section, provide primary materials which are products of one manufacturer.

C. Manufacturer's representative: Contractor must arrange to have trained employee of manufacturer on Site periodically during membrane below-grade vapor retarder work to review installation procedures.

1.05 DELIVERY, STORAGE, AND HANDLING

A. Deliver materials to Site in manufacturer's original, sealed containers bearing original labels.

B. Store materials as recommended by manufacturer in enclosed area free from contact with soil and weather. Maintain materials at not less than 50°F (10°C) for at least 24 hours before use.

C. Handle materials in a manner to prevent damage. Remove damaged materials from Site and replace with new specified materials.

1.06 ENVIRONMENTAL REQUIREMENTS

A. Apply below-grade vapor retarder system in fair weather when air and surface temperatures are between 40°F (4°C) and 75°F (24°C).

1.07 WARRANTY

A. Sheet membrane below-grade vapor retarder: Provide written 20 year minimum, material warranty issued by membrane manufacturer upon completion of Work.

PART 2 PRODUCTS

2.01 MANUFACTURERS

A. Stego Industries, LLC., 216 Avenide Fabicante, Suite 101, San Clemente, CA 92672. Phone (877)464-7834. www.stegoindustries.com.

B. W.R. Meadows, P.O. Box 338, Hampshire,IL 60140-0338. Phone (800)342-5976. www.wrmeadows.com.

C. ISI Building Products, 401 Truck Haven Road, East Peoria, IL 61611. Phone (855)698-6562. www.viper2.com.

2.02 MATERIALS

A. Qualities:
   1. Permeance: Less than 0.006 perms per ASTM F1249.
   2. Permeance: Less than 0. 006 perms after conditioning when tested to ASTM E154 (ASTM E1745 Sections 7.1.2 - 7.1.15).
   3. Puncture Resistance not less than 3,000 grams per ASTM D1709, Method B.
   4. ASTM E1745 “Class A”.
   5. Minimum 15 MIL thick.

B. Vapor Barrier Membrane: Supply one of the following from a single source:
   1. STEGO WRAP 15 MIL – Stego Industries, LLC.
   2. PERMINATOR 15 MIL – W.R. Meadows
   3. VIPER VAPORCHECK II 15 MIL – ISI Building Products
   4. Or approved equal.

2.03 ACCESSORIES

A. Accessories manufactured by Stego Industries, LLC, unless noted otherwise.

B. Seam Tape: Permeance less than 0.1 perms per ASTM F1249 or E96.
   1. "STEGO TAPE " or approved equal.

C. Pipe Boot: Permeance less than 0.01 perms per ASTM F1249 or E96.
   1. “STEGO PRE-CUT PIPE BOOTS” or approved equal.

D. Vapor Proofing Mastic: Permeance less than 0.2 perms per ASTM E96.
   1. “STEGO MASTIC” or approved equal.

E. Perimeter Tape (Wet Application): For use to seal vapor barrier membrane to perimeter of slab while the concrete is place. Permeance less than 0.05 perms. Adhesion peel strength - 16 lb-ft/in. per ASTM D903. Sheer Adhesion Strength – 49 lb-ft/in.
   1. “STEGO CRETE CLAW TAPE 3”” or approved equal.

F. Perimeter Tape (Dry Application): For use to seal vapor barrier membrane to perimeter of slab after the concrete has cured. Permeance less than 0.05 perms.
   1. "STEGOTACK TAPE" or approved equal.

PART 3 EXECUTION

3.01 PREPARATION

A. Installer shall examine conditions of substrates and other conditions under which Work shall be performed and notify Contractor, in writing, of circumstances detrimental to proper completion of Work. Do not proceed with Work until unsatisfactory conditions are corrected.

3.02 INSTALLATION

A. Install under-slab insulation board per manufacturer's installation instructions.
   1. Stager seams by at least 40%.
   2. Tape seams per manufacturer's instructions.
   3. Install vertical insulation with mastic at slab edges prior to backfilling.

B. Install below-grade vapor retarder in accordance with ASTM E1643 and manufacturer's instructions.
   1. Unroll vapor retarder with the longest dimensions parallel with the direction of the concrete pour.
   2. Lap vapor retarder up sides of slab edge formwork and either apply "wet application" perimeter tape or secure to formwork for future installation of "dry application" perimeter tape.
   3. Overlap seams a minimum of 6" (150 mm) and seal with seam tape.
   4. Seal penetrations per manufacturer's instructions.
   5. Manufacturer's representative shall inspect the vapor retarder installation prior to pouring concrete slab.
   6. Patch damaged areas per manufacturer's instructions.

3.03 CLEANING AND PROTECTION

A. Protect completed membrane below-grade vapor retarder from subsequent construction activities as recommended by manufacturer.

END OF SECTION

SECTION 07 84 00 – FIRESTOPPING

PART 1 GENERAL

1.01 SECTION INCLUDES

A. Firestopping for penetrations through fire-resistance rated walls and partitions, including both empty openings and openings containing cables, cable trays, pipes, ducts, conduits, and other penetrating items.

B. Sealant joints in fire-resistance rated construction.

1.02 RELATED REQUIREMENTS

A. Section 07 90 00 – Joint Protection.

B. Section 09 21 16 – Gypsum Board Assemblies

1.03 INFORMATIONAL SUBMITTALS

A. Product Data:
   1. Manufacturer's Material Safety Data Sheet (MSDS) for each type of material to be installed.
   2. Certification by firestopping material manufacturer that products supplied comply with local regulations controlling use of Volatile Organic Compounds (VOCs) and are nontoxic to building occupants.

B. Test reports: Product test reports from, and based on test performed by, qualified testing and inspecting agency evidencing compliance of firestopping, with requirements based on comprehensive testing of current products.

C. Quality assurance data:
   1. Indicate type of materials, installation methods, and relationship to adjoining construction for each through-penetration firestop system, and each kind of construction condition penetrated and kind of penetrating item.
   2. Include firestop design designation of qualified testing and inspecting agency evidencing compliance with requirements for each condition.
   3. Submit documentation, including illustrations, from qualified testing and inspecting agency applicable to each through-penetration firestop configuration for construction and penetrating items.
   4. Qualification data for firms and persons as specified below to demonstrate capabilities and experience.

1.04 ACTION SUBMITTALS

A. Samples for selection and verification of color: Engineer reserves right to require sealant color samples for exposed areas.

1.05 QUALITY ASSURANCE

A. Qualifications: Installer shall be certified, licensed, or otherwise qualified by firestopping material manufacturer as having necessary experience, staff, and training to install manufacturer's products in accordance with specified requirements.

B. Regulatory requirements:
   1. Provide firestopping complying with following fire-test-response characteristics requirements:
      a. Firestopping tests shall be performed by qualified testing and inspecting agency such as Underwriter's Laboratory (UL) or another agency acceptable to Authority Having Jurisdiction (AHJ).
      b. Through-penetration firestop systems shall be identical to those tested in accordance with ASTM E814, under conditions where positive furnace pressure differential of at least 0.01" of water column is maintained at distance of 0.78" below fill materials surrounding penetrating item in test assembly.
      c. Through-penetration firestop system products shall bear classification markings of qualified testing and inspecting agency.
      d. Through-penetration firestop systems shall correspond to those indicated by reference to through-penetration firestop system designations listed by UL Fire Resistance Directory.
      e. Fire-resistive joint sealant systems are identical to those tested for fire-response characteristics in accordance with UL 2079, under conditions where positive furnace pressure differential is at least 0.01" of water column, as measured 0.78" from face exposed to furnace fire.
      f. Fire-resistance rating of joint sealants shall correspond to those indicated by reference to design designations listed by UL Fire Resistance Directory.
      g. Joint sealants, including backing materials, shall bear classification markings of qualified testing and inspecting agency.
   2. Provide firestopping products containing no detectable asbestos as determined by methods specified in 40 CFR Part 763, Subpart F, Appendix A, Section 1, "Polarized Light Microscopy".

C. Coordinate construction of openings and penetrating items to ensure designated through-penetration firestop systems are installed in accordance with specified requirements.

D. Owner and Engineer, or a designated representative, reserve right to review installed firestopping systems for compliance with specified requirements.

1.06 DELIVERY, STORAGE, AND HANDLING

A. Deliver materials undamaged in manufacturer's clearly labeled, unopened containers, identified with brand, type, and UL label where applicable.

B. Coordinate delivery of materials with scheduled installation date to allow minimum storage time at project site.

C. Store materials under cover and protect from weather and damage in compliance with manufacturer's requirements.

D. Comply with recommended procedure, precautions or remedies described in material safety data sheets as applicable.

E. Do not use damaged or expired materials.

1.07 ENVIRONMENTAL REQUIREMENTS

A. Do not apply materials when temperature of substrate material and ambient air is below 60°F (15°C).

B. Maintain minimum temperature before, during, and for 3 days after installation of materials.

C. Provide ventilation in areas to receive solvent cured materials. Ventilation rate shall be in accordance with manufacturer's instructions by either natural means, or where inadequate, by forced air circulation.

PART 2 PRODUCTS

2.01 PRODUCT TYPES

A. Products listed are examples to be used only if appropriate to required installation. Other products may be necessary depending on conditions encountered.

2.02 SYSTEM DESCRIPTION

A. Use appropriate firestop material and installation as necessary to meet required fire rating of penetrated, fire-rated wall or floor.

B. Provide firestopping components compatible with each other, substrates forming openings, and items, if any, penetrating firestopping under conditions of service and application, as demonstrated by firestopping manufacturer based on testing and field experience.

C. Provide components for each firestopping system needed to install fill materials and to comply with performance requirements specified herein. Use only components specified by firestopping manufacturer and approved by qualified testing and inspecting agency for designated fire-resistance rated system. Accessories include, but are not limited to, following:
   1. Semi-refractory fiber (mineral wool) insulation.
   2. Ceramic fiber.
   3. Sealants used in combination with other forming materials to prevent leakage of fill materials in liquid state.
   4. Fire-rated form board.
   5. Joint fillers for joint sealants.
   6. Temporary forming materials.
   7. Substrate primers.
   8. Collars.
   9. Steel sleeves.

D. For products requiring mixing prior to application, comply with firestopping manufacturer's instructions for accurate proportioning of materials, water (if required), type of mixing equipment, selection of mixer speeds, mixing containers, mixing time and other procedures needed to produce firestopping products of uniform quality with optimum performance characteristics for application indicated.

2.03 PERFORMANCE REQUIREMENTS

A. Provide firestopping systems produced and installed to resist spread of fire, according to requirements indicated, and passage of smoke and other gases.

B. Provide through-penetration firestop systems with ratings as determined by ASTM E814, where indicated and where systems protect penetrating items exposed to contact with adjacent materials in floor areas to be occupied.

C. Provide joint sealants with fire-resistance ratings indicated, as determined by UL 2079, but not less than that equaling or exceeding fire-resistance rating of construction assembly.

D. Provide firestopping products that do not deteriorate when exposed to view, traffic, moisture, and physical damage.
   1. For penetrations involving insulated piping, provide through-penetration firestop systems not requiring removal of insulation.
   2. For firestopping exposed to view, provide products with flame-spread values of less than 25 and smoke-developed values of less than 450, as determined by ASTM E84.
   3. For firestopping in areas used as air plenum, provide products with flame-spread values of less than 25 and smoke developed values of less than 50, as determined by ASTM E84.

2.04 SILICONE ELASTOMERIC SEALANT

A. Product options:
   1. GE Silicones "Pensil 300" joint sealant.
   2. RectorSeal Corporation "Metacaulk 835+."
   3. Nelson Firestop Products "CLK" firestop sealant.
   4. Tremco "FYRE-Sil."

2.05 FIRESTOPPING COMPOUND

A. Product options:
   1. Hilti "FS 635" trowelable firestop compound.
   2. Isolatek International "Cafco TPS."
   3. National Gypsum Company Gold Bond "Sta-Smooth FS 90" fire-shield compound.
   4. Nelson Firestop Products "CMP" firestop compound.
   5. RectorSeal Corporation "Metacaulk 950."
   6. Thermal Ceramics "FireMaster Putty.".
   7. United States Gypsum Company "FIRECODE" compound.

2.06 ACCESSORIES

A. Primer: Type recommended by firestopping manufacturer for specific substrate surfaces.

B. Dam material: Provide dam material, temporary or permanent, as recommended by firestopping manufacturer.

C. Provide forming materials, backer rods, and fire-resistant fillers as necessary.

D. Installation accessories: Clips, collars, fasteners, temporary stops or dams, and other devices required to position and retain materials in place.

PART 3 EXECUTION

3.01 EXAMINATION

A. Examine areas and conditions under which Work is to be performed and identify conditions detrimental to proper or timely completion. Do not proceed with installation until unsatisfactory conditions have been corrected.

3.02 PREPARATION

A. Clean openings and joints immediately prior to installing firestopping to comply with recommendations of firestopping manufacturer and following requirements:
   1. Remove foreign materials from surfaces of openings and joint substrates and from penetrating items that could interfere from adhesion of firestopping.
   2. Surfaces to which firestop materials will be applied shall be free of dirt, grease, oil, rest, laitance, release agents, water repellents, and any other substances that may affect proper adhesion.

B. Provide masking tape and temporary covering to prevent damage or discoloration of adjacent surfaces by firestopping materials. Remove tape as soon as possible without disturbing firestopping's seal with substrates.

C. Install backing or damming materials to arrest liquid material leakage.

3.03 INSTALLATION

A. Install firestop materials in accordance with manufacturer's instructions and published "Through-Penetration Firestop Systems" in UL Fire Resistance Directory.

B. Install material at walls or partition openings containing penetrating sleeves, piping, ductwork, conduit and other items, requiring firestopping.

C. Install forming or damming materials and other accessories of types required to support fill materials during application and in position needed to produce cross-sectional shapes and depths required to achieve fire ratings of designated through-penetration firestop systems. After installing fill materials, remove combustible forming materials and other accessories not indicated as permanent components of firestop systems.

D. Apply firestopping material in sufficient thickness to achieve rating equal to rating of wall or floor construction through which opening penetrates, to a uniform density and texture.

E. Completely fill voids and cavities formed by openings, forming materials, accessories and penetrating items. Apply materials to contact and adhere to substrates formed by openings and penetrating items.

F. Tool nonsag sealants immediately after sealant application and prior to time skinning or curing begins. Form smooth, uniform beads of configuration indicated or required to produce fire-resistance rating, as well as to eliminate air pockets, and to ensure contact and adhesion of sealants with sides of joint. Remove excess sealant from surfaces adjacent to joint.

G. Place sealant to completely seal junctions with adjacent dissimilar materials.

H. Remove dam material after firestopping material has cured.

I. Do not proceed to enclose firestopping with other construction until Owner, inspection agency, or representative has reviewed firestopping.

J. Where deficiencies are found, repair or replace firestopping to comply with requirements.

3.04 CLEANING

A. Clean surfaces adjacent to sealed openings and joints to be free of excess firestop materials and soiling as Work progresses.

3.05 PROTECTION

A. Protect firestopping during and after curing period from contact with contaminating substances or damage from construction operations or other causes until completion of construction. If damage or deterioration occurs, remove damaged or deteriorated firestopping immediately and install new materials to produce firestopping complying with specified requirements.

END OF SECTION

SECTION 07 90 00 – JOINT PROTECTION

PART 1 GENERAL

1.01 SECTION INCLUDES

A. Sealants.

B. Joint cleaner, primers and sealers.

C. Sealant joint backing materials and accessories.

1.02 RELATED REQUIREMENTS

A. Section 03 30 00 – Cast-in-Place Concrete: Sealants used in conjunction with concrete.

B. Section 04 20 00 – Concrete Unit Masonry.

C. Section 13 34 19 – Metal Building Systems

1.03 INFORMATIONAL SUBMITTALS

A. Product Data: Submit manufacturer's product data and installation instructions for each type of joint sealer and accessory material required.

B. Wall Joint Seals:
   1. Manufacturer’s certification that:
      a. Products are capable of withstanding temperature of 150 degrees F (65 degrees C) for 3 hours while compressed to minimum of movement capability dimension without evidence of bleeding of impregnation medium from material.
      b. Same material after heat stability test and after cooling to room temperature will self-expand to maximum of movement capability dimension within 24 hours at 68 degrees F (20 degrees C).

1.04 ACTION SUBMITTALS

A. Samples: Sealant colors.

B. Wall Joint Seals:
   1. Shop Drawings:
      a. Indicate joint locations, dimensions, and adjacent construction.
      b. Provide details for transitions in plane and direction for continuity of seal through watertight transitions from wall expansion joint to other interfacing expansion joint systems at adjacent construction.
   2. Product Data: Material description and application instructions.
   3. Samples:
      a. Minimum 2” x 2” inch joint seal samples showing available colors.
      b. Minimum 6” long samples of each joint seal.

1.05 QUALITY ASSURANCE

A. Interior sealants and sealant primers: Maximum volatile organic compound content in accordance with SCAQMD Rule 1168.

B. Provide each type of joint sealer required produced by one manufacturer.

C. Wall Joint Seals Manufacturer Qualifications:
   1. Minimum 10 years experience in production of specified materials.
   2. Certified to ISO 9001 and 14001.

D. Wall Joint Seals Installer Qualifications: Minimum 2 years experience in work of this Section.

1.06 DELIVERY, STORAGE AND HANDLING

A. Deliver materials in manufacturer's original, unopened, undamaged and labeled containers.

B. Store, handle and protect materials from damage or contamination from foreign materials in accordance with manufacturer's recommendations.

1.07 PROJECT CONDITIONS

A. Apply joint sealants as late as possible in construction, preceding application of painting and following cleaning operations.

B. Do not apply joint sealants during inclement weather conditions or when temperature is above or below manufacturer's limitations for installation.

1.08 WARRANTY

A. Contractor and joint sealant applicator shall jointly warranty elastomeric joint sealants work for 2 years from date of final acceptance.

B. Warranty shall include replacing joints which fail to perform as airtight; or fail in adhesion, cohesion, abrasion resistance, weather resistance, extrusion resistance, migration and stain resistance or general durability.

PART 2 PRODUCTS

2.01 MANUFACTURERS

A. BASF, Building Systems (MasterSeal Products).

B. Pecora Corp.

C. Tremco, Inc.

D. Dow Corning Corp.

E. General Electric Co., Silicone Products Div.

F. Sika Emseal.

G. Products referenced in this Section are manufactured by BASF Building Systems (MasterSeal Products), unless noted otherwise.

2.02 SEALANTS

A. Polyurethane, single-component:
   1. Type: “NP-1.”
   2. Color: Match adjacent surfaces.
   3. Use: Sealant work unless specified otherwise.

B. Acrylic latex:
   1. Type: “NP 520.”
   2. Single-component, nonstaining, nonbleeding complying with requirements of ASTM C834.
   3. Use: Nonmovement joints in interior construction.

2.03 JOINT CLEANER AND PRIMER

A. Provide type of cleaning compound recommended by sealant manufacturer for joint surface to be cleaned.

B. Joint primer: Type recommended by sealant manufacturer; compatible with sealant and sealant backing.

2.04 SEALANT BACKING MATERIAL

A. As recommended by sealant manufacturer; nonbonding to sealant and adjacent surfaces.

B. Nonstaining and fully compatible with sealant material.

C. Size: To fit joint width in compression, as recommended by backing manufacturer.

D. Where joint design or depth will not permit use of backer rod, provide adhesive backed polyethylene bond breaker tape.

2.05 WALL JOINT SEAL

A. Basis of Design: Emshield WRF2 by Sika Emseal.

B. Description: Silicone coated, ultraviolet resistant, dual-faced, fire-rated, watertight primary wall seal.

C. Form: Precompressed to less than design joint size, packaged in shrink-wrap packaging.

D. Fire protection rating: 2 hours, tested to UL 2079.

E. Movement capability: Plus and minus 50% (total 100%) of nominal material size.

F. R-value: 1.03 per inch depth at nominal joint size compression, tested to ASTM C518.

G. STC rating: 62 in STC 68 wall, tested to ASTM E90.

H. OITC rating: 52 in OITC 52 wall, tested to ASTM E90.

I. Air permeability: Maximum 0.02 liter per second per square meter, tested to ASTM E283 at 75 Pa.

J. Water penetration: No water penetration, tested to ASTM E331 at 5000 Pa test pressure.

K. Wind loading: No deflection, tested to ASTM E330 at 4954 Pa or 200 MPH wind.

L. VOC Emissions: CDPH-1.2-2017: Pass

M. Color: Match to adjacent material finish.

N. Adhesive: Epoxy type, furnished by joint seal manufacturer.

O. Silicone: Field applied corner bead at face of seal to substrate interface, furnished by joint seal manufacturer, in same material and color as used in factory coating.
   1. Abrasion Resistance: Less than 1% weight loss, tested to ASTM D4060
   2. Fuel Resistance: Pass, tested to ASTM C719/C1135

P. Intumescent Sealant: Field applied to face of joints, furnished by joint seal manufacturer.

Q. Location: As indicated on Drawings.

PART 3 EXECUTION

3.01 PREPARATION

A. Wall Joint Seals: Clean joints thoroughly; remove loose and foreign matter that could impair adhesion or performance.

3.02 INSTALLATION

A. Install joint sealer materials and accessories in strict accordance with manufacturer's installation instructions.

B. Install sealant backer rod, except where recommended to be omitted by sealant manufacturer for application indicated. Use rod diameter that will cause compression when installed.

C. Make joints watertight and airtight.

D. Apply sealer materials using handguns or pressure equipment with proper nozzle size. Apply joint sealants in uniform, continuous ribbons without gaps or air pockets, with complete “wetting” of joint bond surfaces on both sides. Fill sealant rabbet to slightly concave surface, slightly below adjoining surfaces. At horizontal joints between horizontal surface and vertical surface, fill joint to form slight cove, so joint will not trap moisture and dirt. Hand tool and finish all joints.

E. Apply bond breaker as required or as recommended by sealant manufacturer.

F. Install joint sealants within recommended temperature ranges and to depths indicated or when not indicated, as recommended by sealant manufacturer.

G. Protect adjacent surfaces from damage. Clean soiled surfaces immediately. Replace damaged material that cannot be properly cleaned with new materials.

H. Wall Joint Seals
   1. Install joint seal in accordance with manufacturer’s installation instructions and approved Shop Drawings.
   2. Remove joint seal from precompressed packaging, immediately insert into joint, and allow to expand.
   3. Use temporary retainers if required to maintain joint seals in position until expansion is complete.

3.03 SCHEDULE

A. Caulk nonmoving general interior joints with acrylic latex calk.
B. Install sealants at other locations shown, with sealant appropriate for application.

END OF SECTION

SECTION 08 11 13 – HOLLOW METAL DOORS AND FRAMES

PART 1 GENERAL

1.01 SECTION INCLUDES

A. Hollow metal doors and frames.

B. Frame anchors.

1.02 RELATED REQUIREMENTS

A. Section 04 05 00 – Common Work Results for Masonry.

B. Section 08 70 00 – Hardware.

C. Section 08 80 00 – Glazing.

D. Section 09 90 00 – Painting and Coating.

1.03 ACTION SUBMITTALS

A. Shop Drawings indicating door and frame elevations and sections, materials, gages and finishes, fabrication and erection details, locations of finish hardware by dimension and locations/details of openings and louvers.

1.04 QUALITY ASSURANCE

A. Qualifications: Hollow metal distributor shall be qualified by manufacturer of products to be furnished, and have in their regular employment, a knowledgeable person who will be available at reasonable times to consult with Engineer, Contractor, and Owner regarding matters affecting door and frame openings.

1.05 DELIVERY, STORAGE, AND HANDLING

A. Deliver doors and frames cardboard wrapped, crated, palletized or otherwise protected during transit and site storage.

B. Inspect doors and frames upon delivery for damage. Minor damages may be repaired provided refinished items are equal to new work and accepted by Engineer; otherwise, remove and replace damaged items.

C. Store doors and frames at site in dry secure place.
   1. Place units on minimum 4" (100 mm) high wood blocking.
   2. Avoid use of nonvented plastic or canvas shelters that could create humidity chamber.
   3. If cardboard wrapper on door becomes wet, remove carton immediately.
   4. Provide 1/4" (6 mm) spaces between stacked doors to promote air circulation.

PART 2 PRODUCTS

2.01 MANUFACTURERS

A. Amweld Building Products.

B. Ceco Door Products.

C. Curries Co.

D. Pioneer Industries.

E. Republic Doors and Frames.

F. Steelcraft.

2.02 HOLLOW METAL DOORS

A. Doors, full flush:Face sheet: Flush; smooth, weatherproof, cold-rolled stretcher leveled steel.
   2. Face sheet thickness:
      a. Interior doors: 18-gage (1.0 mm).
      b. Exterior doors: 16-gage (1.5 mm).
   3. Top and bottom edge: Flush; continuous steel closure channel, 16-gage (1.5 mm) minimum, welded to each face.
   4. Hardware reinforcement: Manufacturer's standard for hardware specified for each door.
   5. Lock and hinge rail edge: Seamless, welded, filled, and ground smooth full height; 14-gage (2.0 mm) minimum standard rails full height.
   6. Lock edge: Beveled.
   7. Cores:
      a. Interior doors: Manufacturer’s standard honeycomb core or solid slab of expanded polystyrene foam permanently bonded to each face skin, except where mineral core is required for fire-rated doors.
      b. Exterior doors: Solid slab of polyurethane foam permanently bonded to each face skin.
   8. Door thickness: 1-3/4" (45 mm).
   9. Size: As shown on Drawings.

B. Fabricate glass light frames in doors of not less than 18-gage (1.0 mm) galvanized steel.

C. Hardware for Class "A" labeled doors: Furnish butts in accordance with UL requirements.

D. Install butts on Class "A" labeled doors prior to delivery. Install in accordance with UL requirements.

2.03 DOOR FABRICATION

A. Fabricate all doors in accordance with ANSI/SDI A250.8, except where more stringent requirements are specified.

B. Fabricate fire-rated hollow metal doors of materials in accordance with UL requirements. Place UL labels where visible when in installed position. Refer to Drawings for class requirements. Comply with NFPA 80.

C. Exterior doors: Hot-dipped galvanized, zinc-coated commercial quality carbon steel, ASTM A924 with ASTM A653, A60 zinc coating, mill phosphatized. Also galvanize associated reinforcements, stops, and trim.

D. Reinforce and prepare doors to receive hardware.

E. Fill surface depressions with metallic paste filler and grind smooth uniform finish.

F. Touch up areas where galvanized coating has been removed due to sanding or handling.

G. Chemically treat surfaces and apply manufacturer's standard, baked-on prime coat.

2.04 HOLLOW METAL FRAMES

A. Types:
   1. Frames, except drywall partitions: Fully welded frames.
   2. Drywall partitions: Fully welded drywall frames.

B. Door bumpers: Manufacturer's standard resilient type; removable for replacement.

C. Frame profile and jamb depth: As indicated on Drawings.

2.05 FRAME FABRICATION

A. Fabricate frames from 16-gage (1.5 mm) steel.

B. Fabricate fire-rated hollow metal frames of materials in accordance with UL requirements. Place UL labels where visible when frames are installed in position. Refer to Drawings for class requirements. Comply with NFPA 80.

C. Exterior frames: Hot-dipped galvanized, zinc-coated commercial quality carbon steel, ASTM A924 with ASTM A653, A60 zinc coating, mill phosphatized. Associated stops, anchors, clips, reinforcement, and trim shall also be galvanized.

D. Accurately form and cut mitered corners of welded type frames. Weld on inside surfaces. Grind welded joints to smooth uniform finish.

E. Accurately form interlocking joints of knocked down frames to maintain alignment of parts when field assembled.

F. Accurately cope and securely weld butt joints of mullions and transoms of glazed lights, and interior screens. Grind welded joints to smooth uniform finish.

G. Reinforce frames wider than 4' (1200 mm) with 12-gage (2.6 mm) formed steel channels weld in place, flush with top of frames.

H. Reinforce, provide cutouts, and prepare frames to receive hardware and electronic devices.

I. Place minimum of 3 single bumpers on single door frames. Space equally along strike jambs.

J. Place minimum of 2 single bumpers on double door frames. Place on frame heads.

K. Fill surface depressions of hollow metal frames with metallic paste filler and grind to smooth finish.

L. Touch up areas where galvanized coating has been removed due to sanding or handling.

M. Chemically treat surfaces and apply manufacturer's standard baked on prime coat.

N. Coat inside of exterior frames with corrosion-inhibiting bituminous material.

2.06 FRAME ANCHORS

A. Wall anchors for frame attachment to masonry construction:
   1. Anchors built into exterior or masonry: Galvanized.

2. Masonry anchors: Adjustable, flat, corrugated or perforated “T” shaped anchors with leg not less than 2" (50 mm) wide by 10" (250 mm) long or masonry “wire” type not less than 3/16" (5 mm) diameter.

B. Wall anchors for attachment to drywall partitions:
   1. Manufacturer's adjustable type compression anchors where knocked down frames are indicated.
   2. Use steel or wood stud anchors sized to accommodate frame jamb depth and face dimension on welded frames.

C. In-place masonry or concrete:
   1. 3/8" (10 mm) countersunk flat head stove bolt and expansion shields.
   2. Space 6" (150 mm) from top and bottom of frame and at 24" (600 mm) on center maximum between.
   3. Weld pipe spacers or other type of spacers in accordance with manufacturer's standard design in back of frame soffit to protect frame profile during tightening of bolts and anchors.

D. For attachment to structural steel:
   1. Non-rated frame: Continuously weld frame to steel member, each side all around.
   2. Fire-rated frame:
      a. Mechanically fasten frame to steel member.
      b. Frame: “Punched and dimples” at 4 equal spaces on jambs and 1 centered on header, mechanically attached.
      c. Joint between frame and steel member: Continuously seal each side with rated sealant.

E. Provide frame jamb anchors; 1 each jamb per 30" (750 mm) of frame height or fraction thereof.

F. Floor anchors, angle clip type:
   1. 16-gage (1.5 mm) minimum.
   2. To receive 2 fasteners per jamb.
   3. Welded to bottom of each jamb.

G. Head struts: For frames not anchored to masonry or concrete construction, provide ceiling struts spot welded to jambs each side extending to building structure.

PART 3 EXECUTION

3.01 INSTALLATION

A. Install doors and frames in accordance with SDI 100 and with NFPA 80 for fire-rated doors, except as amended in this Section.

B. Coordinate installation of glass and glazing in doors.

C. Jambs of frames set against masonry: Fill frames solid with grout.

D. Frames set in metal stud walls, spot grout frames at strike jamb anchors.

END OF SECTION

SECTION 08 30 00 SPECIALTY DOORS AND FRAMES

PART 1 GENERAL

1.01 SECTION INCLUDES

A. Rolling service doors.

B. Fire-rated service doors.

C. Electric operators.

1.02 RELATED REQUIREMENTS

A. Section 09 90 00 - Painting and Coating.

B. Section 13 34 19 - Metal Building Systems.

C. Section 26 05 05 – Electric Motors.

1.03 ACTION SUBMITTALS

A. Shop Drawings indicating pertinent dimensioning, general construction, component connections and details, anchorage methods, hardware location, and installation details.

1.04 CLOSETOUT SUBMITTALS

A. Operation and maintenance data for motor and transmission, shaft and gearing, lubrication frequency, control adjustments, and spare part sources.

PART 2 PRODUCTS

2.01 MANUFACTURERS

A. Cookson Co.

B. Cornell Iron Works, Inc.

C. North American Rolling Door.

D. Overhead Door Corp.

E. Raynor Garage Doors.

F. Materials referenced in this Section are manufactured by Overhead Door Corp., unless noted otherwise.

2.02 ROLLING SERVICE DOORS

A. Series 625 “Stormtite” insulated service door, with bottom weatherseal, exterior guide, and internal hood seals for exterior use:
   1. Curtain slat: Type F-265I, 20-gage (0.90 mm), minimum, galvanized steel.
   2. Back cover slat: 24-gage (0.60 mm) galvanized steel.
   3. Insulation: Fully foamed in place between slats.
   4. Operation: Chain-hoist or motor-operated as indicated on Drawings.
   5. Size and location: See Door Schedule on Drawings.

B. Components:
   1. Endlocks: Attached to each end of alternate slats to prevent lateral movement.
   2. Bottom bar: 2 galvanized steel angles bolted back-to-back to reinforce curtain in guides complete with vinyl bottom weatherseal.
   3. Guides: Manufacturer's standard roll-formed galvanized steel shapes and wall angle, or structural steel angles to suit door and opening size, completely weatherstripped both sides for exterior doors.
   4. Brackets: Galvanized steel designed to support counterbalance, curtain, and hood assembly.
   5. Hood: 24-gage (0.60 mm), minimum, galvanized steel with intermediate supports where required.
   6. Counterbalance: Helical torsion housed in steel tube or pipe barrel, adjustable by means of an adjusting tension wheel. System shall be capable of producing sufficient torque to assure easy operation of curtain from any position.
   7. Locks: Provide cylinder locks for manually operated service doors. Doors shall be master keyed.
   8. Finish:
      a. Curtain slats and hood: Galvanized with rust-inhibitive roll coating process baked on prime coat.
      b. Finish coat: 0.6 mils (0.1524 mm) thick baked-on polyester (powder coat). Select color from manufacturer’s full line of colors.
      c. Guides, bottom bars, brackets: Galvanized.

2.03 FIRE-RATED SERVICE DOORS

A. Series 635 Insulated rolling fire door:
   1. Curtain slat: Type F-265 flat slat, 22-gage (0.75 mm), minimum, galvanized steel.
   2. Back cover slat: 24-gage (0.60 mm) galvanized steel.
   3. Insulation: Mineral wool filling internal space between slats.
   4. Operation: Motor-operated.
   5. Size and location: See Door Schedule on Drawings.

B. Components:
   1. Endlocks: Attached to each end of alternate slats to prevent lateral movement.
   2. Bottom bar: 2 galvanized steel angles, 1-1/2" x 1-1/2" x 1/8" (38 mm x 38 mm x 3 mm) minimum to reinforce curtain.
   3. Guides: Manufacturer's standard roll-formed galvanized steel shapes or structural steel angles to suit opening size and mounting.
   4. Brackets: Steel plate to support barrel counterbalance and hood.
   5. Hood: 24-gage (0.60 mm), minimum, galvanized steel with intermediate supports where required.

6. Counterbalance: Helical torsion springs housed in steel tube or pipe barrel adjustable by means of an adjusting tension wheel. System must be capable of producing sufficient torque to assure easy operation of curtain from any position.
7. Automatic closure: Thermally controlled by means of fusible links to 65°F (18°C). Locate fusible links in accordance with manufacturer's instructions and NFPA 80. Operation mechanism will be disengaged during automatic closing. Automatic closing will have rate of descent controlled by governor.
8. Smoke seals: Brush type.
9. Finish:
    a. Curtain slats and hood: Galvanized with rust-inhibitive roll coating process baked on prime coat.
    b. Finish coat: 0.6 mils (0.1524 mm) thick baked-on polyester (powder coat). Select color from manufacturer’s standard color chart.
    c. Guides, bottom bars, brackets: Galvanized.

2.04 ELECTRIC OPERATOR

A. UL-approved in accordance with UL 325.

B. Mounting: Side.

C. Electrical requirements: 230 volt, single-phase, 60 Hz supply to electric motor of size as required by door manufacturer for size of door specified.

D. Adjustable clutch, double-shoe brake system actuated by independent full line voltage solenoid controlled by motor starter.

E. Limit switch: Fully enclosed, positive gear driven.

F. Motor: See Section 26 05 05 for motor requirements.

G. Starter: Fully enclosed, magnetic, across-the-line reversing.

H. Control station:
1. 3-button (Open-Close-Stop) continuous hold type control for each operator.
2. 24-volt circuit.
3. Surface-mounted.
4. Provide control station for each door.
5. Include key-operated switch located inside door jamb.

I. Safety edge:
1. Location: At bottom edge of doors, full width.
2. Type: Pneumatic.
3. Wire to reverse door upon striking object.
4. Neoprene covered to provide weatherseal.

PART 3 EXECUTION

3.01 INSPECTION

A. Verify that wall openings are ready to receive work and opening dimensions and tolerances are within limits.

B. Beginning of installation means acceptance of existing surfaces.

3.02 PREPARATION

A. Prepare opening to permit correct installation of door unit.

3.03 INSTALLATION

A. Install overhead coiling doors, with electric operators and controls, in accordance with manufacturer's instructions.

B. Fit, align, and adjust door assemblies' level and plumb; provide smooth operation.

C. Coordinate installation of electrical service. Provide electric wiring from disconnect to door operator and from control station to door operator.

3.04 ADJUSTING AND CLEANING

A. Adjust door assembly.

B. Clean doors and frames.

C. Remove labels and visible markings.

END OF SECTION

SECTION 08 36 13 – SECTIONAL OVERHEAD DOORS

PART 1 GENERAL

1.01 SECTION INCLUDES

A. Sectional overhead doors.

B. Electric operators.

1.02 RELATED REQUIREMENTS

A. Section 09 90 00 – Painting and Coating.

B. Section 13 34 19 – Metal Building Systems.

C. Section 26 05 05 – Electric Motors.

1.03 ACTION SUBMITTALS

A. Shop Drawings indicating opening dimensions and tolerances, component construction, connections and details, anchorage methods and spacing, hardware and locations, and installation details.

1.04 CLOSEOUT SUBMITTALS

A. Operation and maintenance data for motor and transmission, shaft and gearing, lubrication frequency, control adjustments, and spare part sources.

1.05 DELIVERY, HANDLING, AND STORAGE

A. Deliver doors in manufacturer's packaging complete with installation instructions.

B. Store doors in a dry, protected location.

PART 2 PRODUCTS

2.01 MANUFACTURERS

A. Clopay Building Products.

B. Overhead Door Corp.

C. Raynor Garage Doors.

D. Wayne Dalton Corp.

E. Materials referenced in this Section are manufactured by Overhead Door Corp., unless noted otherwise.

2.02 DOORS

A. Type: Series 418, 16-gage (1.5 mm) flush door with foamed-in-place insulation.
   1. Door panels: Roll-formed galvanized steel construction with steel backup cover, manufacturer's standard gage.
   2. Finish: 2 coats of white polyester baked-on enamel outside and inside.

B. Tracks: 2" (50 mm) wedge-type, galvanized steel. Full vertical lift profile; mounted to steel angle brackets.

C. Hardware: Hinges and adjustable roller holders of galvanized steel; full floating hardened steel ball bearing rollers; located at every sill and rail meeting point.

D. Locks: Interior mounted slide lock.

E. Weatherstripping: Manufacturer's standard.

F. Lift mechanism: Torsion spring on cross head shaft, with braided steel lift cables. Springs shall have 50,000 life cycles for heavy-duty counterbalancing.

G. Operation: Electric motor operation with chain hoist back-up.

H. Accessories:
   1. Vision panels: 4 Thermal vision panels at eye level per door. Size: 2'-0" (600 mm) width x 1'-0" (300 mm) height.
   2. Pass door.
   3. Safety bottom feature with sensing edge.
   4. Jamb seals.
   5. Automatic opening.
   6. Reinforcing struts.
   7. Bottom strips.
   8. High usage package.

2.03 ELECTRIC OPERATORS

A. Type: Model L+.

B. Electric Motor Operation: Provide UL listed electric operator, size and type as recommended by manufacturer to move door in either direction at not less than 2/3 foot (200mm) per second nor more than 1 foot per second. Operator shall meet UL324/2010 requirements for continuous monitoring of safety devices.

C. Motor requirements: 230 volt, 60 Hz., 3-phase, constant duty, instant reversing with automatic reset thermal overload. NEMA Type 4 UL-approved. See Section 26 05 66 for additional requirements.

D. Mounting: Side on cross head shaft.

E. Adjustable safety friction clutch.

F. Brake system actuated by independent voltage, solenoid controlled by motor starter.

G. Limit switch: Enclosed gear driven.

H. Enclosed magnetic across-the-line reversing starter, mounting brackets and hardware.

I. Reduction: Heavy-duty, worm-gear with additional reduction by chain and sprockets.

J. Control station:
   1. 3-button (Open-Close-Stop) momentary type control for each electric operator.
   2. 24-volt circuit.
   3. Mounting: Surface.

4. Include key-operated switch located inside door jamb.

K. Safety edge:
   1. Location: At bottom edge of door panel, full width.
   2. Type: Pneumatic, wired to stop door upon striking object
   3. Neoprene covered to provide weatherseal.

L. Provide auxiliary chain hoist for emergency operation.

PART 3 EXECUTION

3.01 INSPECTION

A. Verify wall openings are ready to receive work and opening dimensions and tolerances are within limits.

B. Beginning of installation means acceptance of existing surfaces.

3.02 PREPARATION

A. Prepare opening to permit correct installation of door unit and air and vapor barrier seal.

3.03 INSTALLATION

A. Install door unit assembly in accordance with manufacturer's recommendations.

B. Use anchorage devices appropriate to type of construction to securely fasten assembly to wall construction and building framing without distortion or stress.

C. Securely brace door tracks suspended from structure. Secure tracks to structural members only.

D. Fit and align door assembly including hardware, level and plumb, to provide smooth operation.

E. Coordinate installation of electrical service. Provide electric wiring from disconnect to door operator and from control station to door operator.

F. Install perimeter trim and closures.

3.04 ADJUSTING AND CLEANING

A. Adjust door assembly.

B. Clean doors, frames and glass.

C. Remove labels and visible markings.

END OF SECTION

SECTION 08 51 13 – ALUMINUM WINDOWS

PART 1 GENERAL

1.01 SECTION INCLUDES

A. Extruded aluminum windows.

1.02 RELATED REQUIREMENTS

A. Section 07 90 00 – Joint Protection.

B. Section 08 80 00 – Glazing.

C. Section 13 34 19 – Metal Building Systems

1.03 ACTION SUBMITTALS

A. Shop drawings including wall opening and component dimensions; wall opening tolerances required; anchorage and fasteners; affected related work; and installation requirements.

B. Samples of aluminum finishes.

1.04 DELIVERY, STORAGE, AND HANDLING

A. Provide wrapping or strippable coating to protect prefinished aluminum surfaces.

1.05 WARRANTY

A. Provide manufacturer's standard warranty.

B. Warranty: Cover complete window system for failure to meet specified requirements.

PART 2 PRODUCTS

2.01 MANUFACTURERS

A. EFCO Corporation 500 Series.

B. Kawneer Company, Inc., Sealair 8225T Series.

C. Wausau Metals Corporation 2250-T Series.

2.02 SYSTEM DESCRIPTION

A. Windows with fixed sash.

B. Glazing: Exterior.

2.03 PERFORMANCE REQUIREMENTS

A. Window components to provide for expansion and contraction caused by cycling temperature range of 170°F (94°C).

B. Design and size members to withstand dead loads and live loads caused by pressure and suction of wind as calculated in accordance with code.

C. Limit mullion deflection to 1/200, or flexure limit of glass with full recovery of glazing materials, whichever is less.

D. Drain water entering joints, condensation occurring in glazing channels, or migrating moisture occurring within system, to exterior.

E. Limit air infiltration through assembly to 0.06 cu ft/min/sq ft (0.311/sec/m^2) of assembly surface area, measured at a reference differential pressure across assembly as measured in accordance with ASTM E283.

2.04 MATERIALS

A. Extruded aluminum: ASTM B221; alloy suitable for anodized finish.

2.05 FABRICATED COMPONENTS

A. Frames: Nominal 2-1/4" (56 mm) deep minimum profile, of 0.125" (3 mm) thick section; thermally broken with interior portion of frame insulated from exterior portion, flush glass stops of snap-on type.

B. Fasteners: Stainless steel.

C. Window washing anchors.

2.06 FABRICATION

A. Fabricate windows allowing for minimum clearances and shim spacing around perimeter of assembly, yet enabling installation.

B. Rigidly fit and weld joints and corners. Accurately fit and secure corners tight. Make corner joints flush, hairline, and weatherproof. Seal corner joints with sealant.

C. Provide drainage holes to direct moisture to exterior.

D. Prepare components to receive anchor devices. Fabricate anchorage items.

E. Prepare components with internal reinforcement for window washing anchors*.

F. Provide internal reinforcement in mullions with stainless steel members to maintain rigidity.

2.07 FINISHES

A. Exterior exposed aluminum surfaces: Painted – Color as selected by Owner from manufacturers full line of colors.

B. Interior exposed aluminum surfaces: Painted – Color as selected by Owner from manufacturers full line of colors.

C. Apply 1 coat of bituminous paint to concealed aluminum surfaces in contact with cementitious or dissimilar materials.

PART 3 EXECUTION

3.01 INSPECTION

A. Verify wall openings and adjoining air and vapor seal materials are ready to receive work of this section.

B. Beginning of installation means acceptance of existing conditions.

3.02 INSTALLATION

A. Install window frames and hardware in accordance with manufacturer's instructions.

B. Use anchorage devices to securely attach frame to structure.

C. Align window frame plumb and level, free of warp or twist. Maintain dimensional tolerances, aligning with adjacent work.

D. Pack fibrous insulation in shim spaces at perimeter to maintain continuity of thermal barrier.

E. Adjust operable hardware for smooth operation and tight fit of sash.

F. Provide aluminum screens at vented windows.

3.03 CLEANING

A. Remove protective material from prefinished aluminum surfaces.

B. Wash down exposed surfaces using solution of mild detergent in warm water, applied with soft, clean wiping cloths. Take care to remove dirt from corners. Wipe surfaces clean.

C. Remove excess sealant by moderate use of mineral spirits or other solvent acceptable to sealant manufacturer.

END OF SECTION

SECTION 08 70 00 – HARDWARE

PART 1 GENERAL

1.01 SECTION INCLUDES

A. Hardware for interior and exterior doors.

B. Thresholds and weatherstripping.

1.02 RELATED REQUIREMENTS

A. Section 08 11 13 – Hollow Metal Doors and Frames.

1.03 INFORMATIONAL SUBMITTALS

A. Quality assurance data:
   1. Hardware supplier shall supply templates to door and frame manufacturer to enable proper and accurate sizing and locations of cut outs for hardware.
   2. “Hardware Schedule” listing hardware required for each door indicating style and finish.
   3. Keying schedule resulting from coordination between Owner and hardware supplier.
   4. Upon completion of project, submit “As Built” hardware schedule to Owner.

1.04 ACTION SUBMITTALS

A. Shop Drawings: Indicate locations and mounting heights of each type of hardware.

1.05 QUALITY ASSURANCE

A. Furnish UL-listed hardware for fire-rated doors openings in conformance to requirements for class of opening scheduled.

B. Hardware shall conform to Americans with Disabilities Act (ADA) requirements.

1.06 KEYING

A. Door locks: Keyed to Match Owner's existing keying scheme.

B. Prepare detailed keying schedule in consultation with Owner and Architect.

C. Use construction master key system for locks and cylinders.

D. Supply 2 change keys for each lock. Supply 2 keys for each keyed group. Provide 3 master keys.

E. Send change keys with locks to project site. Ship master keys and control keys via registered mail to Owner.

1.07 DELIVERY, STORAGE, AND HANDLING

A. Deliver hardware to project site in manufacturer's original labeled containers.

B. Securely store hardware items in clean, dry place.

PART 2 PRODUCTS

2.01 MANUFACTURERS

A. Butts:
   1. Bommer Industries, Inc. (BOM)
   2. Hager Hinge Co. (HAG)
   3. McKinney. (McK)
   4. Stanley Hardware. (ST)
B. Locksets:
   1. Best Access Systems. (BST)
   2. Kaba Ilco Corp (KI)
   3. Sargent Mfg. Co. (SAR)
   4. Schlage Lock Co. (SCH)
   5. Yale Security Inc. (YAL)
   6. Simplex Access Control Corp. (SIM)
C. Closers:
   1. LCN Closers. (LCN)
   2. Norton. (NOR)
   3. Rixson-Firemark. (RIX)
   4. Sargent Mfg. Co. (SAR)
D. Exit devices:
   1. Sargent Mfg. Co. (SAR)
   2. Von Duprin, Inc. (VON)
   3. Yale Security Inc. (YAL)
E. Auxiliary hardware:
   1. Hager Hinge Co. (HAG)
   2. Hiawatha, Inc. (HIA)
   3. Ives. (IVE)
F. Cylinders:
   1. Match hardware manufacturer.
   2. Best Access Systems.
G. Thresholds, weatherstripping, and seals:
   1. National Guard Products, Inc. (NGP)
   2. Pemco Mfg. Co. (PEM)
   3. Reese Enterprises, Inc. (RES)
   4. Zero International, Inc. (ZER)
H. Power-assist door operator:
   1. Nabco Entrances, Inc. (NE)
   2. Norton (NOR)
   3. Horton (HOR)

2.02 HARDWARE

A. Provide items as listed in “Hardware Schedule” at end of this Section, complete to function as designed.

B. Butt hinges:
   1. Quantity:
      a. Two hinges per leaf through 60" (1500 mm) in height.
      b. Three hinges per leaf through 90" (2250 mm) in height.

c. One additional hinge per leaf for each additional 30" (750 mm) in height, or fraction thereof.
d. Four hinges for Dutch doors.

2. Size:
a. 4" x 4" (100 mm x 100 mm) for 1-3/8" (35 mm) thick doors.
b. 4-1/2" x 4-1/2" (113 mm x 113 mm) for 1-3/4" (45 mm) thick doors, to 36" (900 mm) wide.
c. 5" x 4-1/2" (125 mm x 113 mm) for 1-3/4" (45 mm) thick doors, over 36" to 48" (900 mm to 1200 mm) wide.
d. 6" x 4-1/2" (150 mm x 113 mm) for 1-3/4" (45 mm) thick doors, over 48" (1200 mm) wide.
e. 5" x 5" (125 mm x 125 mm) for 2-1/4" (56 mm) thick doors, to 42" (1050 mm) wide.

3. Provide nonremovable pins on exterior out-swinging doors and at other locations specified in Hardware Schedule.

C. Lockset design:Following lockset designs are manufactured by Schlage, and are identified for reference purposes only.
2. Mortise locksets: "06" squared return lever, with escutcheon plate.
3. Cylinder locksets: "Rhodes" squared return lever.
4. Furnish knurled lever handles on doors to stairs other than exit stairs, loading platforms, stages, boiler rooms, and any other hazardous locations.
5. Provide removable core system for keyed locks.

D. Closers:
1. Furnish drop plates and mounting brackets as necessary for door and jamb conditions.
2. Mount closers on room side of corridor doors, stair side of stairway doors, and interior side of exterior doors, unless noted otherwise.
3. Furnish through bolts on closers mounted on mineral core doors.
4. Closers on exterior doors shall have cold weather fluid, and shall be of type that controls closing of door with built-in door stop effective at point selected at installation. Door stop shall be cushioned by shock absorbing heavy-duty spring action effective at pivot.
5. Provide parallel arm closers where possible.

E. Wall stops:
1. Provide wall stops at doors that open against walls.
2. Provide convex type insert, except where operating mechanisms on the hardware striking the wall stop requires a concave insert.

F. Fire and smoke seals: Provide appropriate head, jamb, and sill protections as required by applicable codes for fire-rated doors as shown in opening schedule on Drawings. Provide smoke gaskets at 20-minute labeled doors.

G. Weatherstripping: Provide seals for head, jambs, and sill as shown on Hardware Schedule.

2.03 FINISHES

A. Hardware and accessories: Unless specified otherwise, US32D, satin stainless steel.
B. Kickplates: US32D, satin stainless steel.
C. Closers: Manufacturer's standard brushed aluminum covers.
D. Weatherstripping: Clear anodized aluminum, unless noted otherwise.
E. Thresholds: Mill aluminum, unless noted otherwise.

PART 3 EXECUTION

3.01 INSTALLATION

A. Install hardware in accordance with manufacturer's recommendations, using proper templates.

B. Install hardware at mounting heights recommended by BHMA.

C. Fit mortised items, then removed and stored in original containers until painting and finishing has been completed, then properly reinstall in permanent place.

D. Upon completion, check and adjust all hardware for proper operation. Submit installation instructions, templates, adjusting tools and keys to Owner.

E. Mount weatherstripping prior to installation of closers or other hardware. Make allowance for mounting closer where weatherstripping is designed to accept arm of closer or overhead stop.

3.02 INSPECTION

A. Upon completion of installation, inspect and test for function and performance, and adjust to optimum working condition.

B. Clean hardware to restore original finish.

3.03 HARDWARE SCHEDULE

A. Quantities listed in Hardware Schedule are for each door opening occurrence.

Item	Quantity	Manufacturer	Model
HW-1: Exterior Single Entrance Doors			
Butts	--	ST	FBB199
Exit Device	1	VON	9975-#6 (Mortise Lever)
Lockset	1	SCH	L9453 (Entrance) (Mortise)
Closer	1	LCN	4111 Spring Cush
Head/Jamb Seals	1 set	ZER	328AA
Sill Sweep	1	ZER	328AA
Rain Drip*	1	ZER	Series 148, Part 142
Threshold	1	ZER	545A

Item	Quantity	Manufacturer	Model
HW-2: Exterior Active/Inactive Double Doors			
Butts	--	ST	FBB199
Lockset	1	SCH	L9453 (Entrance) (Active leaf)
Dummy trim	1	SCH	L0172 (Inactive leaf)
Closer	2	LCN	4111 Spring Cush w/ Hold Open (Active leaf)
Flush Bolts	1 set	IVE	FB458 (Inactive leaf)
Head/Jamb Seals	1 set	ZER	328A
Sill Sweep	1	ZER	328A
Astragal	1	ZER	Series 87M (Interior face)
Rain Drip*	1	ZER	Series 148, Part 142
Threshold	1	ZER	655A

HW-3: Interior Active/Inactive Double Doors			
Butts	---	ST	FBB179
Lockset	1	SCH	ND80PD (Storeroom)
Dummy trim	1	SCH	L0172 (Inactive leaf)
Closer	1	LCN	4111 Spring Cush w/ Holder (Active leaf)
Flush Bolts	1 set	IVE	FB458 (Inactive leaf)
HW-4: Storeroom Doors			
Butts	---	ST	F179
Lockset	1	SCH	ND80PP (Storeroom)
Wall Stop	1	IVE	WS402CCV/CVX, where applicable
Floor Stop	1	IVE	FB436

* Add rain drip only if other door protection is not provided.

END OF SECTION

SECTION 08 80 00 GLAZING

PART 1 GENERAL

1.01 SECTION INCLUDES

A. Glass types.
B. Glazing materials and accessories.

1.02 RELATED REQUIREMENTS

A. Section 07 90 00 – Joint Protection.
B. Section 08 11 13 – Hollow Metal Doors and Frames.
C. Section 08 51 13 – Aluminum Windows.

1.03 INFORMATIONAL SUBMITTALS

A. Product Data.

1.04 ACTION SUBMITTALS

A. Samples of glazing and components.

PART 2 PRODUCTS

2.01 MANUFACTURERS

A. Guardian Industries.

B. Interpane Glas Insustrie AG.

C. Pilkington – A Division of Nippon Sheet Glass Co., Ltd.

D. Vitro Architectural Glass.

E. Viracon, Inc.

F. Cardinal Glass Industries, Inc.

G. GE Structured Products.

H. Materials referenced in this Section are manufactured by Vitro Architectural glass, unless noted otherwise.

2.02 GLASS TYPES

A. Type 1:
1. Clear, insulating double-glazed unit, with Sungate 400 Low-E coating.
2. Quality: q^3 glazing select.
3. Thickness: 1" (25 mm), consisting of 2 lites of 1/4" (6 mm) thick glass with 1/2" (13 mm) sealed air space.
4. Use: Exterior window glazing.

B. Type 2:
   1. Tinted, Low-E glass, insulating double-glazed unit, with tempered **Clear** exterior lite and tempered clear interior lite, with Sungate *400* Low-E coating.
   2. Quality: q^3 glazing select.
   3. Thickness: 1" (25 mm), consisting of 2 lites of 1/4" (6 mm) thick glass with 1/2" (13 mm) sealed air space.
   4. Use: Exterior Doors

2.03 GLAZING MATERIALS

A. Glazing compound: Modified oil type, nonhardening, knife grade consistency; white color.
B. Butyl sealant: Single-component; Shore A durometer hardness of 10-20; black color; nonskinning.
C. Silicone sealant: Single-component, solvent curing; capable of water immersion without loss of properties; nonbleeding; nonstaining; color: white.
D. Extruded neoprene or EPDM gaskets.
E. Confirm compatibility of glazing sealants with glass manufacturer.

2.04 GLAZING ACCESSORIES

A. Material and size as recommended by glazing and frame manufacturers.
B. Spacer shims: Material and size as recommended by glazing and frame manufacturers.
C. Glazing tape: Preformed butyl-compound with integral resilient tube spacing device; coiled on release paper; black color.
D. Glazing clips: Manufacturer's standard type.

PART 3 EXECUTION

3.01 INSPECTION

A. Verify surfaces of glazing channels or recesses are clean, free of obstructions, and ready for Work.
B. Beginning of installation means acceptance of substrate.

3.02 PREPARATION

A. Clean contact surfaces with solvent and wipe dry.
B. Seal porous glazing channels or recesses.
C. Prime surfaces scheduled to receive sealant, if recommended by sealant manufacturer.

3.03 INSTALLATION

A. Comply with CPSC 16 CFR C1, FGMA Glazing Manual and SIGMA standards.
B. Install glass in frames in accordance with manufacturer's recommendations.
C. Completed installation shall be weathertight and secure, withstanding normal temperature changes, wind loads and live loads, without failure, including glass breakage and component failure.
D. Do no outside glazing in damp or dusty weather or when temperature is below 40°F (4°C).
E. Protect glass from breakage. At large panels, use cross streamers of tape attached to frames but held off glass surface.

3.04 CLEANING

A. Remove nonpermanent labels, wash, and polish both faces of glass. Comply with glass product manufacturer's recommendations for final cleaning.
B. Remove and replace any damaged or defective glass.

END OF SECTION

SECTION 08 91 00 - LOUVERS

PART 1 GENERAL

1.01 SECTION INCLUDES

A. Stationary louvers.

B. Operable louvers.

1.02 RELATED REQUIREMENTS

A. Section 07 90 00 - Joint Protection

B. Section 13 34 19 - Metal Building Systems

1.03 ACTION SUBMITTALS

A. Shop Drawings indicating, in large scale, profile of frame and installation details, relation to adjacent construction, flashing, blade configuration, connections to duct work, construction materials, finishes, bird screens, free-air, pressure drop, and water penetration.

B. Samples:
   1. Indicate, in large scale, profile of frame and installation details, relation to adjacent construction, flashing, blade configuration, connections to duct work, construction materials, finishes, bird screens, free-air, pressure drop, and water penetration.
   2. Color specified, minimum size 3" x 6" (75 mm x 150 mm).

1.04 QUALITY ASSURANCE

A. Stationary louver performance: Rate in accordance with AMCA 500, latest edition.

B. Operable louver performance: Rate in accordance with AMCA 511, latest edition.

PART 2 PRODUCTS

2.01 ACCEPTABLE MANUFACTURERS

A. Air Balance, Inc.

B. American Warming and Ventilating.

C. CESCO Products.

D. Construction Specialties, Inc.

E. Greenheck.

F. Ruskin Company.

G. Materials referenced in this Section are manufactured by Ruskin Company, unless noted otherwise. Equivalent products from other manufacturers are acceptable.

2.02 STATIONARY LOUVERS

A. Designation: LVR.
B. Size: As scheduled on Drawings.

C. Type: 6” (150 mm) stationary louver with 45° blade angle and hidden mullions.

D. Material: Extruded aluminum with minimum 0.125” (3 mm) frame and 0.090” (2.3 mm) blade thickness.

E. Provide intermediate structural supports required to withstand wind load of 20 lb/sq ft (98 kg/sq m).

F. Finish: Kynar; color to match adjacent construction material.

G. Performance: As scheduled on Drawings for maximum face velocity and maximum static pressure drop.

H. Water penetration: 0.01 oz/sq ft (0.3 ml/sq m) maximum at 680 fpm.

I. Manufacturer: Ruskin Company Model ELF6811S.

PART 3 EXECUTION

3.01 PREPARATION

A. Take site dimensions affecting Work.

B. Ensure openings affecting this Work are properly prepared and that flashings are correctly located to divert moisture to exterior.

3.02 INSTALLATION

A. Install louvers in openings properly aligned and level.

B. Secure louver rigidly with fasteners of noncorrosive metals to suit materials being encountered.

C. Coordinate installation method with mechanical work.

D. Set and tie in to flashings to ensure diversion of moisture to exterior.

E. Install bird screens fixed to interior.

F. Blank off unused portions of louvers with 1-1/4" (31 mm) thick polyisocyanurate insulated panel by Mapes Industries, or equal.

G. Louver sizes too large for shipping shall be built by Contractor from factory-assembled louver sections to provide overall sizes required.

3.03 FINISH

A. Apply finishes in accordance with manufacturer's instructions.

B. Exterior: Kynar finish or as required to match adjacent construction material.

C. Interior: Galvanized steel or as required to match ductwork.

D. Edges: Either factory-enclosed with like materials or field-enclosed with galvanized sheet metal to match panel.

3.04 PROTECTION

A. Protect louvers and finishes from damage during delivery and installation.

B. Protect adjacent surfaces, finishes, and materials from damage during installation of louvers.

END OF SECTION

SECTION 09 21 16 – GYPSUM BOARD ASSEMBLIES

PART 1 GENERAL

1.01 SECTION INCLUDES

A. Gypsum board.

B. Fasteners and accessories.

C. Joint materials.

D. Finish materials.

1.02 RELATED REQUIREMENTS

A. Section 07 21 00 – Thermal Insulation.

B. Section 07 90 00 – Joint Protection.

C. Section 09 22 16.13 – Nonstructural Metal Stud Framing.

D. Section 09 90 00 – Painting and Coating.

E. Section 13 34 19 – Metal Building Systems.

1.03 DELIVERY, STORAGE, AND HANDLING

A. Deliver manufactured materials in their original packages and containers bearing name of manufacturer and brand.

B. Store in protected area according to manufacturer's recommendations.

C. Do not store materials on damp or wet surfaces. Remove from premises and replace damaged materials.

D. Store gypsum board flat. Do not deliver to building in which application is to be made until windows are in and glazed, and exterior doors are hung.

1.04 ENVIRONMENTAL REQUIREMENTS

A. In cold weather and during gypsum board joint finishing, maintain temperatures in building within range of 55°F to 70°F (13°C to 21°C). Provide adequate ventilation to carry off excess moisture.

PART 2 PRODUCTS

2.01 MANUFACTURERS

A. CertainTeed Corp.

B. Georgia-Pacific Corp.

C. Gold Bond Building Products, National Gypsum Co.

D. USG Corporation.

E. Materials referenced in this Section are manufactured by USG Corporation, unless noted otherwise.

2.02 GYPSUM BOARD

A. Gypsum drywall panels: “Sheetrock” gypsum panels, with tapered edges on face side ASTM C1396; 5/8” (16 mm) thick.

B. Fire-rated gypsum panels: Comply with ASTM C1396 for Type X gypsum board. ”Sheetrock FireCode” gypsum panels, with tapered edges; 1/2” (13 mm) thick.

2.03 FASTENERS

A. Screw type: Self-drilling, self-tapping, bugle head, for use with power-driven tool.

B. Drywall-to-sheet metal; drywall-to-wood; drywall-to-drywall; or cementitious board to wood or steel framing: As recommended by wallboard manufacturer.

C. Length and spacing: As recommended by wallboard manufacturer.

2.04 ACCESSORIES

A. Provide accessories necessary for complete installation. Plastic trim accessories not acceptable.

B. Corner beads: Galvanized steel, Dur-A-Bead No. 103, or equal.

C. Control joints: Galvanized steel control joint No. 093, or equal.

D. Casing beads: Galvanized steel, Metal Trim No. 200-A, or equal.

E. Galvanized steel resilient furring channels 8-gage (4 mm) hanger wire 16-gage (1.5 mm) tie wire and miscellaneous trim required for complete installation.

2.05 JOINT MATERIALS

A. Adhesives and joint compound materials shall be as recommended by manufacturer of gypsum board for type best suited to prevailing partition or wall materials and conditions.

B. Joint reinforcement tapes and joint compounds shall be capable of producing finished joints between gypsum wallboard panels that are free of cracks and form smooth, unobtrusive surfaces suitable for painting.

C. Materials shall be moisture-resistant and not affected by humidity after final hardening.

2.06 FINISH MATERIALS

A. Prime coat, wall or ceiling: “Sheetrock First Coat” flat latex base coat paint with high solids content, or equal.

B. Aggregated non asbestos powder for ceiling application: Imperial “QT Spray Texture Finish” with Latex additive.

C. Aggregate or unaggregated powder for interior walls: “Spray Texture Finish.”

D. Unaggregated powder for light-to-medium-light textures: “Multi-purpose Texture Finish.”

E. Latex type for interior surfaces: “Quik and Easy Ready-to-Use Wall and Ceiling Texture.”

F. Powder, spray-applied, to interior surfaces: “Texture XII Drywall Surface.”

PART 3 EXECUTION

3.01 INSTALLATION - GENERAL

A. Install materials as recommended by manufacturer of gypsum board, and in accordance with ASTM C840.

B. Verify metal studs, furring, and miscellaneous framing accessories are properly installed and ready to receive gypsum wallboard.

C. Verify insulations and vapor barriers are in place.

D. Complete installation shall be plumb and true, without waves or buckles, and rigid with members fastened securely together.

E. Use approved UL construction system for fire-rated walls and ceiling.

3.02 CONTROL JOINTS

A. Installation in wall and ceiling membranes shall include breaking gypsum boards behind control joint.

B. In ceiling construction, framing shall be broken, and in partitions, use separate studs on each side of control joints.

C. Position joints to intersect light fixtures, air diffusers, door openings and other areas of stress concentration.

D. Isolate gypsum construction with control joints when:
   1. Partitions or ceilings of dissimilar construction meet and remain in same plane.
   2. Wings of “L”-, “U”-, and “T”- shaped ceiling areas are joined.
   3. Expansion or control joints occur in base wall construction and/or building structure.

E. Use in face of gypsum partitions and ceilings when size of surface exceeds following control joint spacings:
   1. Partitions: 30’ (10 m) maximum in either direction.

2. Interior ceilings (with perimeter relief): 50’ (16.5 m) maximum in either direction.
3. Interior ceilings (without perimeter relief): 30’ (10 m) maximum in either direction.
4. Exterior ceilings: 30’ (10 m) maximum in either direction.

F. Ceiling-height door frames may be used as vertical control joints for partitions. Door frames of lesser height may only be used as control joints if standard control joints extend to ceiling from both corners of top of door frame.

G. In ceilings, locate to intersect column penetrations.

3.03 GYPSUM BOARD INSTALLATION

A. Where possible, install single sheets full distance across space, perpendicular, to minimize end joints. Long edges of board shall be at right angles to framing members.

B. Abutting ends or edge joints shall occur over surface of framing member; fit neatly and accurately into corner conditions.

C. Locate and install control joints.

D. Secure to supports and along abutting ends with screws of type and spacing recommended by manufacturer and as specified.

E. Fasteners shall be not less than 3/8” (10 mm) from edges or ends.

F. Stagger joints between layers at multiple-layer installation.

G. Insert sound insulation full width between studs and extend above finish ceilings as shown on Drawings. Friction fit between wall studs.

H. Set gypsum board at base of partitions in acoustical sealant to seal joint at floor. Set exterior gypsum board in bed of acoustical sealant, continuous at floor. Calk at top of partitions at structure above with acoustical sealant. Apply 1/4” (6 mm) minimum round single bead on each side of partition and around cut-outs. Acoustical sealant shall be Sheetrock Brand Acoustical Sealant meeting ASTM C919 and ASTM C834.

I. After trim has been applied, and prior to decoration, correct surface damage and defects as required to leave work smooth and without blemish.

J. Apply gypsum board to suspended ceilings with long dimension at right angle to furring channels. Fasten board to channels with approved fasteners.

K. Gypsum board shall be continuously protected from weather and damage by dampness or any other means.

L. Exterior sheathing limitations: Follow manufacturer’s requirements for storage and installation.

M. Existing gypsum board partitions or ceilings being patched and/or altered shall be accomplished using studs and drywall of thickness required to match existing adjacent material. Entire surface of existing altered or patched partitions or ceilings shall be repaired and prepared to receive paint finish.

3.04 CEMENT BOARD INSTALLATION

A. Stagger panel joints and fasten to framing with fasteners and spacing as recommended by manufacturer.

B. Joint treatment: Prefill joints with tile-setting mortar or adhesive and then immediately embed tape and level joints.

3.05 ACCESSORIES INSTALLATION

A. Fasten corner beads, control joints and other accessories securely in place and build around them with 3 coats of feathered-out joint compound and sand smooth.

B. Reinforcement: Use reinforcement tape around openings to reduce stresses on drywall at these points; cover with feathered-out joint compound and sand smooth.

3.06 JOINT FINISH APPLICATION - WALL AND CEILINGS

A. Finishing: In accordance with GA-214, as follows.

B. Level 1:
   1. Joints and interior angles must have tape embedded in joint compound. Surface must be free of excess joint compound. Tool marks and ridges are acceptable.
   2. Location: Concealed drywall surfaces not exposed to view.

C. Level 4:
   1. Joints and interior angles must have tape embedded in joint compound and 3 separate coats of joint compound applied over joints, angles, fastener heads, and accessories. Joint compound must be smooth and free of tool marks and ridges.
   2. Texture finish: Apply according to manufacturer's recommendations.
      a. Surface priming: "Sheetrock First Coat."
      b. Walls: Light to medium texture: "Multi-purpose Texture Finish."
      c. Location: Exposed gypsum board surfaces.

END OF SECTION

SECTION 09 22 16-13 – NONSTRUCTURAL METAL STUD FRAMING

PART 1 GENERAL

1.01 SECTION INCLUDES

A. Metal stud framing system for nonload-bearing interior partitions.

1.02 RELATED REQUIREMENTS

A. Section 07 21 00 - Thermal Insulation: Building thermal and acoustical insulation.

B. Section 09 21 16- Gypsum Board Assemblies.

C. Section 13 34 19 – Metal Building Systems

PART 2 PRODUCTS

2.01 MATERIALS

A. Framing system components: ASTM C645.

B. Studs for interior partitions: Nonload-bearing rolled steel, galvanized, channel shaped, 3-5/8" (92 mm) wide, 25-gage (0.50 mm) thick, punched for utility access.

C. Runners: Same material and finish as studs, bent leg retainer notched to receive studs with provision for crimp locking to stud.

D. Fasteners: GA 203.

PART 3 EXECUTION

3.01 ERECTION

A. Installation shall be in strict conformance to manufacturer's instructions.

B. Secure top and bottom runners at 24" (600 mm) oc. Align to configuration required.

C. Install studs vertically at 16” oc and not more than 2" (50 mm) from abutting construction, each side of openings, and at corners.

D. Provide extended leg ceiling runners when nonload-bearing studs extend full height to underside of structure. Maintain clearance under structural building members to avoid deflection transfer to nonload-bearing studs.

E. Fit runners under and above openings; secure intermediate studs at spacing of wall studs.

F. Brace stud framing and make rigid.

G. Stud bridging:
   1. 0' to 10' (3 m) height: 1 row at center span.
   2. Higher than 10' to 15' (3 m to 4.5 m) height: 2 rows at 1/3 span.

3. Higher than 15' to 20' (4.5 m to 6 m) height: 3 rows at 1/4 span.
4. Higher than 20' to 25' (6 m to 7.5 m) height: 4 rows at 1/5 span.

H. Provide double stud at each gypsum board control joint.

I. Resilient channels: Position at right angles to steel studs, space at 24" (600 mm) o.c. and attach to flanges. Install with mounting flange down except at floor. Locate channels 2" (50 mm) from floor and within 6" (150 mm) of ceiling. Splice channels directly over metal studs.

J. Coordinate erection of studs with installation of service utilities. Align stud web openings.

K. Coordinate installation of bucks, anchors, blocking, electrical, and mechanical work to be placed in or behind stud framing.

L. Coordinate erection of stud system with requirements of door and window frame supports or attachments.

M. Place 1 bead of acoustical sealant, ASTM C919 and ASTM C834, between runner and substrate to achieve acoustic seal.

N. Stud splicing not permissible.

O. Provide additional blocking, brackets, steel channel supports, for securing and supporting wall-mounted fixtures, such as plumbing fixtures, toilet partitions, wall cabinets, miscellaneous hardware.

END OF SECTION

SECTION 09 90 00 – PAINTING AND COATING

PART 1 GENERAL

1.01 SECTION INCLUDES

A. On-site surface preparation and painting.

1.02 RELATED REQUIREMENTS

A. Section 05 50 00 – Metal Fabrications: Shop priming on miscellaneous metals.

B. Section 09 21 16 – Gypsum Board Assemblies

1.03 INFORMATIONAL SUBMITTALS

A. Product Data:
   1. Schedule of products proposed for each system.
   2. Product data sheets, if other than products specified in schedule.

1.04 ACTION SUBMITTALS

A. Samples: Duplicate 6" x 8" (150 mm x 200 mm) samples of paint and stain colors when requested by Engineer. When possible, apply finishes on identical type materials to which they will be applied on job. Identify each sample as to finish type, formula, color name and number, and gloss.

1.05 MAINTENANCE MATERIALS

A. Extra stock: Leave on premises, where directed by Engineer, usable partial cans of paint. Containers shall be tightly sealed and clearly labeled for identification.

1.06 HEALTH AND SAFETY REQUIREMENTS

A. Work shall comply with applicable federal, state, and local laws and regulations including analyses of potential impact of painting operations on painting personnel and on others involved in and adjacent to work zone.

B. Worker exposures: Exposure of workers to chemical substances shall not exceed limits as established by American Conference of Governmental Industrial Hygienists: Threshold Limit Values for Chemical Substances and Physical Agents and Biological Exposure Indices, ACGIH-02 or as required by a more stringent applicable regulation.

C. Toxic compounds: Toxic compounds having ineffective physiological properties, such as odor or irritation levels, shall not be used unless approved by Owner.

D. Training: Workers having access to affected work area shall be informed of contents of manufacturer's current printed product description, Material Safety Data Sheets (MSDS) and technical data sheets for each coating system and shall be informed of potential health and safety hazard and protective controls associated with materials used on Project. Affected work area is one that may receive mists and odors from painting operations. Workers involved in preparation, painting and clean-up shall be trained in safe handling and

application, and exposure limit, for each material which worker will use in Project. Personnel having a need to use respirators and masks shall be instructed in use and maintenance of such equipment.

E. Provide paints for interior use that contain no mercurial mildewcide or insecticide. Provide paint containing not more than 0.06% lead.

F. Provide documentation stating that paints proposed for use meet Volatile Organic Compound (VOC) regulations of local air pollution control districts having jurisdiction over geographical area in which Project is located.

1.07 DELIVERY, STORAGE, AND HANDLING

A. Deliver paint materials in sealed original labeled containers, bearing manufacturer's name, type of paint, brand name, color designation and instructions for mixing and/or reducing. Paint containers shall have batch dates printed on the cans or labels. Also, no paint or coating will be allowed for application if batch date has surpassed expiration.

B. Provide adequate storage facilities. Store paint materials at minimum ambient temperature of 45°F (7°C) in well ventilated area.

C. Take precautionary measures to prevent fire hazards and spontaneous combustion.

PART 2 PRODUCTS

2.01 MANUFACTURERS

A. Benjamin Moore & Co.

B. PPG Industries, Inc.

C. Diamond Vogel

D. Sherwin-Williams Co.

E. Materials and colors referenced in this Section are as manufactured by Sherwin Williams Co., unless noted otherwise.

2.02 MATERIALS

A. Paint accessory materials: Linseed oil, shellac, turpentine, and other materials not specifically indicated herein but required to achieve finishes specified of high quality and approved manufacturer.

B. Paints: Ready-mixed, except field catalyzed coatings. Pigments fully ground maintaining soft paste consistency, capable of readily and uniformly dispersing to complete homogeneous mixture.

C. Paints to have good flowing and brushing properties and be capable of drying or curing free of streaks or sags.

D. Dry mil thickness of paint shall comply with manufacturer's recommendations for materials specified for prevailing substrates and Project conditions.

E. Paints containing lead in excess of 0.06% by weight of total nonvolatile content (calculated as lead metal) shall not be used.

F. Paints containing zinc chromate or strontium chromate pigments shall not be used.

G. VOC content: Paints shall comply with applicable state and local laws enacted to ensure compliance with Federal Clean Air Standards and shall conform to restrictions of local air pollution control authority.

PART 3 EXECUTION

3.01 INSPECTION

A. Thoroughly examine surfaces scheduled to be painted prior to commencement of Work. Report in writing to Engineer, any condition that may potentially affect proper application. Do not commence until such defects have been corrected.

B. Correct defects and deficiencies in surfaces that may adversely affect work of this Section.

3.02 PROTECTION

A. Adequately protect other surfaces from paint and damage. Repair damage as a result of inadequate or unsuitable protection.

B. Furnish sufficient drop cloths, shields, and protective equipment to prevent spray or droppings from fouling surfaces not being painted and surfaces within storage and preparation area.

C. Place cotton waste, cloths, and material that may constitute a fire hazard in closed metal containers and remove daily from site.

D. Remove electrical plates, surface hardware, fittings, and fastenings, prior to painting operations. These items are to be carefully stored, cleaned, and replaced on completion of work in each area. Do not use solvent to clean hardware that may remove permanent lacquer finish.

3.03 PREPARATION

A. Remove mildew, by scrubbing with solution of tri-sodium phosphate and bleach. Rinse with clean water and allow surface to dry completely.

B. Aluminum surfaces: Remove surface contamination by steam, high-pressure water, or solvent washing. Apply etching primer or acid etch. Apply paint immediately if acid etching.

C. Asphalt, creosote, or bituminous surfaces: Remove dirt, oil, grease, and sand if necessary to provide adhesion key. Apply compatible sealer or primer.

D. New concrete floors: Remove contamination, acid etch, and rinse with clear water per International Concrete Repair Institutes surface prep standards. Ensure required acid-alkali balance is achieved. Allow surface to thoroughly dry.

E. Copper surfaces requiring paint finish: Remove contamination by steam, high-pressure water, or solvent washing. Apply vinyl etch primer or acid etch. Apply paint immediately if acid etching.

F. Copper surfaces required to be oxidized: Remove contamination. Apply oxidizing solution of copper acetate and ammonium chloride in acetic acid. Rub on repeatedly for correct effect. Once attained, rinse surfaces well with clear water and allow to dry.

G. Gypsum board surfaces: Remove contamination and repair defects, if any.

H. Galvanized surfaces: Remove surface contamination and oils and wash with solvent. Apply coat of etching type primer. Prepare large, galvanized steel members in accordance with SSPC-SP-16.

I. Zinc coated surfaces: Remove surface contamination and oils and prepare for priming in accordance with metal manufacturer's recommendations.

J. Concrete and concrete masonry:
   1. Remove dirt, loose mortar, scale, powder, and other foreign matter. Remove oil and grease with solution of trisodium phosphate, rinse well and allow surface to thoroughly dry.
   2. Remove stains caused by weathering of corroding metals with solution of sodium metasilicate after being thoroughly wetted with water. Allow surface to thoroughly dry.

K. Plaster surfaces: Fill hairline cracks, small holes, and imperfections with patching plaster. Smooth off to match adjacent surfaces. Wash and neutralize high alkali surfaces where they occur.

L. Iron and steel surfaces:
   1. Cleaning methods: Conform to applicable requirements of SSPC and NACE:
      a. Solvent cleaning: SSPC-SP1.
      b. Power tool cleaning: SSPC-SP3.
      c. Commercial blast cleaning: SSPC-SP6 or NACE 3.
      d. Power tool cleaning to bare metal: SSPC-SP11.
      e. Near white blast cleaning: SSPC-SP10 or NACE 2.
      f. White metal blast cleaning: SSPC-SP5 or NACE 1.
   2. Blast cleaning requirements: Non submerged shall be SSPC-SP6 or SSPC-11 for areas where abrasive blast is prohibited.
   3. Cleaning for other field painting: SSPC-SP3.
   4. Removal of materials such as grease and oil: SSPC-SP1. Apply treatment of phosphoric acid solution, ensuring weld joints, bolts and nuts are similarly cleaned. Prime surfaces to indicate defects, if any. Paint after defects have been remedied.
   5. Surface irregularities from blasting shall be approximately 25% of total paint system dry mil thickness.
   6. Sand and scrape shop primed steel surfaces to remove loose primer and rust. Feather out edges to make touch-up patches inconspicuous. Clean surfaces with solvent. Prime bare steel surfaces.

M. Ductile Iron
   1. Cleaning methods: conform to applicable requirements of NAPF 500-03:
      a. Solvent cleaning: NAPF 500-03-01.
      b. Hand tool cleaning: NAPF 500-03-02.
      c. Power tool cleaning: NAPF 500-03-03.
      d. Abrasive blast cleaning for ductile iron pipe: NAPF 500-03-04.
      e. Abrasive blast cleaning for cast ductile iron fittings: NAPF 500-03-05.

N. Prepare surfaces to be finished in conformance to recommendations of finish manufacturer.

3.04 ENVIRONMENTAL REQUIREMENTS

A. Ensure surface temperatures and surrounding air temperature is above 45°F (7°C) before applying finishes. Minimum application temperatures for latex paints are 45°F (7°C) for interior work and 50°F (10°C) for exterior work. Minimum application temperature for varnish finish is 65°F (18°C).

B. Do no exterior painting while surfaces are damp or during rainy or frosty weather.

C. Do no exterior spray painting while wind velocity is above 13 mph (20 km/h).

D. Provide adequate continuous ventilation and sufficient heating facilities to maintain temperatures above 45°F (7°C) for 24 hours before, during and 48 hours after application of finishes.

E. Provide adequate lighting on surfaces to be finished.

3.05 APPLICATION

A. Apply each coat at proper consistency. Materials shall be evenly spread and applied smoothly without runs or sags, by skilled workers. Do painting under conditions suitable to production of high-quality work. Follow manufacturer's directions on container label.

B. Each coat of paint shall be slightly darker than preceding coat unless otherwise approved by Engineer.

C. Sand lightly between coats to achieve smooth finish on wood or metal surfaces.

D. Do not apply finishes on surfaces that are not sufficiently dry.

E. Allow each coat of finish to dry before following coat is applied, unless directed otherwise by manufacturer.

F. Prime top and bottom edges of metal doors when they are to be painted.

G. Previously finished existing surfaces: Where scheduled to be finished, finish same as designated for new surfaces, except initial (prime) coat may be deleted. Spot-prime damaged or defective existing finish as required to provide uniform finished surface.

H. Where interior or exterior wood or metal are primed in mill or shop, material shall be that specified for such surfaces and shall be used in accordance with manufacturer's directions for first or prime coat. In such case, no prime coat will be required on job, except for touch-up.

3.06 MECHANICAL AND ELECTRICAL EQUIPMENT

A. Refer to mechanical and electrical sections with respect to painting and finishing requirements of non-prefinished equipment, pipes, conduits, and ductwork.

B. Remove grilles, covers, and access panels for mechanical and electrical systems from location and paint separately.

C. Finish paint primed equipment to color selected.

D. In finished areas of building, prime and paint insulated and bare pipes, conduits, boxes, insulated and bare ducts, hangers, brackets, collars and supports, except where items are plated or covered with prefinished coating. Color and texture to match adjacent surfaces unless otherwise directed.

E. Replace identification markings on mechanical or electrical equipment when painted over or spattered.

F. Paint interior surfaces of air ducts, convector, and baseboard heating cabinets that are visible through grilles and louvers with 1 coat of flat black paint, to limit of sight line. Paint dampers exposed immediately behind louvers, grilles, convector, and baseboard cabinets to match face panels.

G. Paint both sides and edges of plywood backboards for electrical equipment before installing backboards and mounting equipment on them.

H. Color code equipment, piping, conduit, and exposed ductwork in accordance with requirements indicated. Color banding and identification (flow arrows, naming, numbering, etc.)

3.07 CLEANING

A. As work proceeds and upon completion, promptly remove paint where spilled, splashed, or spattered.

B. During progress of work, keep premises free from any unnecessary accumulation of tools, equipment, surplus materials, and debris.

C. Upon completion of work, leave premises neat and clean.

3.08 SURFACES EXCLUDED FROM PAINTING

A. Surfaces not requiring painting:
   1. Surfaces above suspended ceilings.
   2. Surfaces concealed inside mechanical and electrical chases.

B. Surfaces on which painting is prohibited:
   1. Sprinkler heads.
   2. Fire detection elements.
   3. Anodized aluminum surfaces.
   4. Glass and mirror surfaces.

5. Chrome and stainless steel hardware items.
6. Plumbing fixtures.
7. Electrical fixtures or wiring devices.
8. Floor finishes, unless specified otherwise.
9. Wall base materials.
10. Fire extinguisher cabinets.
11. Door and window hardware items.
12. Factory finished items, unless specified otherwise.

3.09 PAINT SYSTEMS SCHEDULE

A. System A: Metals, exterior.
   1. Primer, on ferrous metals, galvanized metal, and aluminum: Pro Industrial "Pro-Cryl" Universal Primer, B66-310 Series.Primer, on zinc-rich shop-primed surfaces: Compatible zinc-rich primer as furnished for materials requiring touch-up.
   3. Finish coats: 2 coats "Sher-Cryl" HPA High Performance Acrylic, B66-350 Series.

B. System B: Gypsum board surfaces, interior.
   1. Primer, on gypsum board: "ProMar" 200 Interior Latex Primer Zero VOC B28W02600.
   2. Finish coats: 2 coats "ProMar" 200 Interior Latex Eg-Shel, Zero VOC B30W12651 Series.

C. System C: Metals, interior.
   1. Primer and touch-up on shop-primed surfaces, on ferrous metals, galvanized metal, and aluminum: Pro-Industrial "Pro-Cryl" Universal Primer, B66-310 Series.
   2. Finish coats: 2 coats "ProMar" 200 Interior Alkyd Semi-Gloss, B34W08251 Series.

D. System D: Concrete and concrete masonry, interior.
   1. Filler, on CMU only: "PrepRite" Block Filler, B25W00025.
   2. Primer, on concrete only: "Loxon" Concrete & Masonry Primer LX02W0050.
   3. Finish coats: 2 coats "ProMar" 200 Interior Latex Eg-Shel, Zero VOC B30W12651 Series.
   4. Finish coats: 2 coats Waterbased Industrial Enamel (Low VOC), Gloss, B53-300 Series.
   5. Finish coats: 2 coats "ProMar" 200 Interior Alkyd Eg-Shel, B33 Series.

E. System E: Concrete floors, interior.
   1. Finish coats: 2 coats "Armorseal Tread-Plex" Water-Based Floor Coating, B90 Series.

3.10 COLOR

A. Colors will be selected after award of Contract from manufacturer's standard colors by Owner.

3.11 PAINT SCHEDULE

A. Colors will be selected after award of Contract from manufacturer's standard colors by Owner.

Item Description	System
Structural and miscellaneous steel	A
Hollow metal doors and frames	A
Galvanized and aluminum	A
Gypsum Board	B
Structural and miscellaneous steel	C
Hollow metal doors and frames	C
Galvanized and aluminum	C
Concrete and masonry	D
Concrete floor	E

END OF SECTION

SECTION 10 28 24 – CHEMICAL SAFETY EQUIPMENT

PART 1 - GENERAL

1.1 BASIS

A. The equipment outlined in this document is required for the new room where the NF skid is located in the water treatment plant. All equipment is required on site prior to start-up activities.

1.2 SECTION REQUIREMENTS

A. Submittals: Product Data adequate to demonstrate compliance with any and all specifications outlined in this document and referenced specifications.

PART 2 - PRODUCTS

2.1 COMBINATION SAFETY SHOWER AND EMERGENCY EYEWASH

A. Manufacturers (pre-approved, engineering approved equals accepted):

1. Bradley Model S19-310PVC, Bradley Corp., P.O. Box 309, Menomonee Falls, WI 53052-0309, 800-272-3539, 262-251-6000, bradleycorp.com
2. Econ Model 01060021, Econ Safety Products, 6825 W. Sam Houston Pkwy. N, Houston, TX 77041, (713) 466-1449, 800-283-6266, enconsafety.com

B. Basis-of-Design Product: Provide a combination drench shower and eye wash:

1. Materials: Stainless Steel, yellow painted steel, or PVC
2. Height: 39-inches
3. Eye wash nozzle covers: Nylon “Flip Top” Dust Covers
4. Eye wash activates by flag handle or foot pedal, safety shower activates by pull handle
5. Standards: ANSI Z358.1-2009

2.2 SAFETY EQUIPMENT:

A. The following safety equipment is required:

1. 1 pair of shoulder length, neoprene gloves
2. 1 rubber apron
3. 1 Full face shield, 8 inch minimum.
4. 1 Wall mounted fire extinguisher UL size 3-A:40-B:C

2.3 TEMPERED WATER VALVE:

A. Manufacturers (pre-approved, engineering approved equals accepted):

1. Bradley Model TMV25 S59-2025, Bradley Corp., P.O. Box 309, Menomonee Falls, WI 53052-0309, 800-272-3539, 262-251-6000, bradleycorp.com

B. Basis of Design: Provide a thermostatic control valve sized to match the flow requirements of the provided combination emergency safety shower and eyewash station.

1. Set tempered water outlet temperature to 95°F.
2. Standards: ANSI Z358.1-2009 and NSF rated for potable water use
3. Lead free brass body
4. Integral thermometer on tempered water outlet

2.4 WARNING SIGNS:

A. One Required:

1. Minimum dimensions: 10 inches x 14 inches
2. Material: 1/4 inch thick polyethylene.
3. Letter Color: Red and black on a white background
4. Sign Information: DANGER WEAR PROTECTIVE SAFETY EQUIPMENT WHEN HANDLING CHEMICALS

PART 3 - EXECUTION

3.1 INSTALLATION

A. Install new safety shower / eye wash as shown on the drawings, new tempered water control valve, and new tempered water line from valve to BOTH new and existing safety shower eye/wash per manufacturers recommendations and instructions.

B. Install using fasteners appropriate to substrate indicated and recommended by unit manufacturer. Install units level, plumb, and firmly anchored in locations and at heights indicated.

C. Adjust for unencumbered, smooth operation and verify that mechanisms function properly. Replace damaged or defective items. Remove temporary labels and protective coatings.

END OF SECTION

SECTION 10 44 00 – FIRE PROTECTION SPECIALTIES

PART 1 GENERAL

1.01 SECTION INCLUDES

A. Fire extinguishers.

B. Fire extinguisher cabinets.

C. Accessories.

1.02 QUALITY ASSURANCE

A. Provide portable fire extinguishers, cabinets, and accessories by a single company.

B. Regulatory requirements
   1. Provide new, portable fire extinguishers that are UL-listed and bear UL “Listing Mark” for type, rating, and classification of extinguisher indicated.
   2. Conform to NFPA 10 requirements for portable fire extinguishers.
   3. Conform to Americans with Disabilities Act on maximum cabinet projection in corridors.

1.03 DELIVERY, STORAGE AND HANDLING

A. Package, handle, deliver and store products in a manner that will avoid damage.

PART 2 PRODUCTS

2.01 ACCEPTABLE MANUFACTURERS

A. J. L. Industries.

B. Larsen's Manufacturing Co.

C. Potter-Roemer.

D. Materials referenced in this Section are manufactured by J. L. Industries, unless noted otherwise. Equivalent products from other manufacturers are acceptable.

2.02 FIRE EXTINGUISHERS

A. Model: “Cosmic 5E” multi-purpose dry chemical.

B. Shell: Enameled steel.

C. Quantity: As indicated on Drawings.

2.03 ACCESSORIES

A. Brackets: Provide steel mounting bracket recommended by manufacturer for each extinguisher type.

B. Fire blanket and cabinet:
   1. Type: Royal 2FB.
   2. Quantity: As indicated on Drawings.

PART 3 EXECUTION

3.01 INSTALLATION

A. Install in accordance with manufacturer's recommendations.

B. Prepare recessed in walls for fire extinguisher cabinets as required by type and size of cabinet and style of trim.

C. Securely fasten mounting brackets and fire extinguisher cabinets to structure, square and plumb.

D. Install mounting brackets so top of extinguisher will be no more than 4'-6" (1350 mm) above floor.

E. Check extinguishers for proper charge operation. Units must be in proper operating condition at completion of installation.

END OF SECTION

SECTION 13 34 19 – METAL BUILDING SYSTEMS

PART 1 GENERAL

1.01 SECTION INCLUDES

A. Design, furnish, and erect pre-engineered shop-fabricated metal building frame; metal wall and sloped roof system including gutters and downspouts, roof-mounted equipment curbs, and exterior doors, windows, overhead doors, and louvers, with trim and accessories.

1.02 RELATED REQUIREMENTS

A. Section 07 21 00 - Thermal Insulation

B. Section 08 11 13 - Hollow Metal Doors and Frames

C. Section 08 30 00 - Specialty Doors and Frames

D. Section 08 36 13 - Sectional Overhead Doors

E. Section 08 51 13 - Aluminum Windows

1.03 ATTACHMENTS

A. Floor Plan – A-101

B. Roof Plan – A-121

C. Elevations – A-201 and A-202

1.04 INFORMATIONAL SUBMITTALS

A. Shop Drawings and Product Data:
   1. Shop painting, finishing, colors, profiles, sizes, spacing, and locations of primary and secondary structural framing members, connections, attachments, gutters, downspouts, service and man doors, windows, roof ventilators, insulation, and openings.
   2. Foundation footprint, anchor bolt locations, and details.
   3. Welded connections using standard AWS welding symbols. Indicate net weld lengths.
   4. Location, magnitude and direction of column loads. Dead load, live load, wind load and seismic load shall be listed separately and direction of applied force to foundation clearly indicated for each loading. Indicate designed stress and deflection analysis. Submit prior to start of preparation of foundation detailed shop drawings.
   5. Framing anchor bolt settings, sizes, and locations from datum. Indicate wall and roof system dimensions, panel layout, general construction details, anchorages and methods of anchorage, and methods of installation.

B. Submit Contractor’s and manufacturer's warrantees as outlined below with Bid.

C. Prepare Shop Drawings and calculations with a written certification and seal of a Professional Engineer licensed in the State of Alaska. Certification shall verify building system design and metal roof system design (including panels, clips, and support system components) meet indicated loading requirements and codes of authorities having jurisdiction. Certification

shall reference specific dead loads, live loads, snow loads, wind loads/speeds, tributary area load reductions (if applicable), concentrated loads, collateral loads, seismic loads, end use categories, governing code bodies including year, and load applications.

D. In addition to mill certifications of structural steel, manufacturer shall provide, upon request, evidence of compliance with specifications through testing independent of manufacturer's suppliers. Quality assurance testing shall include structural bolts, nuts, screw fasteners, mastics, and metal coatings (primers, metallic coated products, and painted coil products).

1.05 QUALITY ASSURANCE

A. Perform work in accordance with AISC S335 - Specification for Structural Steel Buildings Allowable Stress Design and Plastic Design and MBMA Low Rise Building Systems Manual.

1.06 QUALITY ASSURANCE

A. Qualifications:
   1. Manufacturer: Company specializing in manufacturing products specified in this section with minimum 5 years documented experience.
   2. Erector: Company specializing in performing Work of this section with minimum 5 years documented experience. Approved by manufacturer.

B. Design structural components, develop Shop Drawings, and perform shop and Site work under direct supervision of Professional Engineer experienced in design of this Work and licensed in the State of Alaska.

1.07 WARRANTY

A. Furnish manufacturer's 10-year weathertight written warranty. Warranty shall be signed by metal roofing system manufacturer and metal roofing system contractor.

B. Furnish manufacturer's 10-year film and color life written warranty for factory-finished metal coating systems against cracking, crazing, chipping, peeling, chalking, or fading. Warranty shall be signed by building system or roof manufacturer and state coating contains 70% Kynar 500 / Hylar 5000 resin.

C. Contractor shall furnish signed 1-year material and workmanship written warranty.

PART 2 PRODUCTS

2.01 MANUFACTURERS

A. American Buildings.

B. Butler Manufacturing Co.

C. Ceco Building Systems.

D. Chief Industries, Inc.

E. Steelox Systems, Inc.

F. Varco-Pruden Corp.

G. Owner approved Manufacturer.

H. Materials referenced in this Section are manufactured by Butler Manufacturing Company, unless noted otherwise. Equivalent products from other manufacturers are acceptable with prior approval of Engineer.

2.02 DESIGN CRITERIA

A. Basic design criteria, rationally applied to structure and its components specified herein, shall conform to applicable sections relating to design requirements and allowable stresses of following publications:
   1. AISC "Specification for the Design, Fabrication, and Erection of Structural Steel for Buildings."
   2. AISI "Specification for the Design of Cold-Formed Steel Structural Members."
   3. AWS "Structural Welding Code."
   4. MBMA "Low Rise Building Systems Manual."

B. Material standards:
   1. Structural steel members: ASTM A572/A572M, Grade 50 or as recommended by manufacturer of pre-engineered building.
   2. Structural tubing: ASTM A500, Grade B.
   3. Bolts, nuts, and washers: ASTM A325, galvanized to ASTM A153/A153M.
   4. Plate or bar stock: ASTM A529/A529M.
   5. Galvanizing: ASTM A123/A123M.
   6. Stainless steel: AISI Type 304.
   7. Welding materials: AWS D1.1; type required for materials being welded.
   8. Primer: SSPC Paint 20, Red Oxide.
   9. Grout: ASTM C1107, nonshrink type, premixed compound consisting of nonmetallic aggregate, cement, water reducing and plasticizing agents, capable of developing minimum compressive strength of 2400 (17 mPa) in 2 days and 7,000 (48 mPa) psi in 28 days.

C. Design loads shall include live load, wind load, seismic load, and dead load of structure and accessories:
   1. Dead load: Weight of structural frame and other materials of building system.
   2. Collateral loads: 15 lb/ft^2 (0.48 kPa) shall be applied to entire structure to account for weight of additional permanent materials other than building system, such as sprinklers, mechanical systems, electrical systems, hung partitions, and ceilings. Allowance does not include weight of hung equipment weighing 50 lb (22 kg) or more.
   3. Mechanical loads: Equipment loads of 50 lb (22 kg) or more shall be as shown on the Drawings and structure (frame, purlins, girts) shall be strengthened as required.
   4. Roof live loads: 20 psf (1 kPa) applied in accordance with MBMA-01 and International Building Code.
   5. Roof snow loads: Develop using ground snow load of 60 lb/ft^2 (2.9 kPa). Compute and apply roof snow load in accordance with International Building Code using an importance factor of 1.1.
   6. Wind loads: Compute and apply wind pressures in accordance with International Building Code using a basic wind speed of 147 mph (236 kph) (3 second gust) and Exposure D.

7. Seismic loads: Compute for seismic response acceleration $S_s = 0.249$ and $S_1 = 0.255$, Use Risk Category III, Site Class C, and importance factor 1.25 in accordance with International Building Code.
8. Primary and secondary members and covering shall be designed for applicable loads and combinations of these loads as set forth in MBMA "Low Rise Building Systems Manual."
9. Design building to withstand anticipated construction loads.

D. Roof construction shall carry UL construction (uplift) rating of not less than Class 90.

E. Locate end wall columns and girts to clear door, window, and louver openings shown on Drawings.

F. Building shall be provided with additional steel framing around roof and wall openings, and roof curbs adequate for design loads.

2.03 DEFLECTION CRITERIA

A. Lateral drift of building rigid frames shall not exceed height/200 under wind loads using a 10 year mean recurrence interval wind velocity.

B. Lateral deflections of rigid building frames shall be compatible with siding and roofing systems furnished.

C. Design metal panel support systems to withstand imposed loads with a maximum vertical deflection of span/180.

D. Building columns, girts and purlins providing lateral support for metal panels shall have maximum lateral deflections under wind loads no greater than span/180 using a 10 year mean recurrence interval wind velocity.

2.04 COMPONENTS

A. Building arrangement and size: As indicated on Drawings.

B. Primary framing:
1. Type: Rigid frame design, with solid-web frame consisting of tapered or uniform depth beams rigidly connected to vertical pin-based columns with "Z" shaped purlins.
2. End wall wind columns and portal bracing where indicated on Drawings.
3. Building shall have rigid frames in end walls.

C. Secondary framing: Purlins, girts, eave struts, flange bracing, wind bracing, head, jamb, roof opening framing, sill supports, clips, and other items.

D. Wall and roof system: Preformed metal panels of vertical profile, with sub girt framing/anchorage assembly, accessory components, and reinforced draped roof insulation and wall insulation. Liner Panel where indicated in Drawings. See Drawings for specific building requirements.

E. Roof pitch and slope: 1:12.

F. Structural steel, girts, bracing, purlins, and miscellaneous framing required for roof and wall openings.

G. Flashings, rake and eave trim, fastenings, closure strips, girt trim, and base trim.

H. Gutters and downspouts.

I. Flashing vent stack through roof and other required roof penetrations.

J. Doors and frames.

K. Windows and frames.

L. Louvers.

2.05 EXTERIOR COVERING MATERIAL

A. Wall panels: Butlerib II Wall System with 12 oc ribs/36" (900 mm) wide panels, 24-gage (0.6 mm).

B. Roof panels: Butlerib II Roof System with 12" oc ribs/36" (900 mm) wide panels, 24-gage (0.6 mm) standard 36" (900 mm) width.

C. Material:
1. Wall panels: G90 zinc-coated cold roll sheet steel, minimum Grade 33 conforming to ASTM A653.
2. Roof panels: G90 zinc-coated cold roll sheet steel, minimum Grade 33 conforming to ASTM A653.

D. Finish:
1. Wall panels: Butlerib II Wall System: Butler-Cote 500, fluoropolymer containing 70% Kynar or Hylar 5000 resin.
2. Roof panels: Butlerib II Roof System: Butler-Cote 500, fluoropolymer containing 70% Kynar or Hylar 5000 resin.

E. Roof openings:
1. Openings 12" (300 mm) or smaller: May be flashed and sealed to roof panel, providing complete structural support and weathertightness is maintained.
2. Openings larger than 12" (300 mm) round or square:
   a. Frame with welded metal base, fabricate from 0.07" (2 mm) minimum thick aluminum.
   b. Support base and its appurtenances by roof purlins and/or header framing, if required.
   c. Base shall have minimum projection of 6" (150 mm) above weather surface of roof and configuration of flanges shall match roof panel.
   d. Seal flange-to-panel joint with nonhardening sealant and fastened in such manner to provide complete support and weathertightness.

F. Covering panels: Full height of walls as shown.

G. Exposed exterior bolts and fasteners: Stainless steel; use neoprene washers for fastenings for covering sheets.

H. Provide base zee flashing, eave trim, eave trim supports, cap flashing, closures, gutters, fascia, downspouts, and other exposed trim. Same finish as wall and roof panels.

2.06 INSULATION

A. See Section 07 21 00 Thermal Insulation.

2.07 METAL LINER PANEL WALLS

A. Manufacturer's standard ribbed interior pane: Butler-Cote 500, fluoropolymer containing 70% Kynar or Hylar 5000 resin.

B. Size:
1. Width: As required to clip to exterior panel.
2. Height: As indicated in Drawings.

C. Provide base trim at floor line.

2.08 ACCESSORIES

A. Trim: Provide trim, flashings, closures, and framing materials as required for finishing walls, roof, and openings. Finish shall match wall and roof panels.

B. Prefabricated curbs:
1. Fabricate from 14-gage (2.0 mm) minimum galvanized sheet steel, welded construction, with extended flange for mounting and constructed to keep top of curb level. Chemically clean galvanized surfaces and paint curb 1 coat of rust-inhibitive primer.
2. Insulation: Rigid-type, 1-1/2" (38 mm) thick installed with protective metal cover.
3. Type and size: To suit mechanical requirements.
4. Finish shall match roof panels.
5. Curb flashing.

C. Gutters and downspouts:
1. Manufacturer's standard roof gutters drop box outlet, downspout straps, and downspouts complete with supports and fastenings.
2. Finish: Match building panels.
3. Minimum gutter size 3.5” x 3.5” (90 mm x 90 mm) and minimum downspout size 1.75” x 2.25” (45 mm x 58 mm) or minimum area of 2.29 in^2 per SMACNA’s Architectural Sheet Metal Manual, 7th Edition. Size system to adequately carry rainwater in accordance with local codes regarding anticipated maximum rainfall.

D. Pipe flashing:
1. Construct of ethylene propylene diene monomer (EPDM) rubber.
2. Bond ductile aluminum reinforcing ring to rubber flange on base of flashing unit.
3. Design flashing to allow for movement where required.

E. Exterior swing doors: See Section 08 11 13 Hollow Metal Doors and Frames.

F. Windows: See Section 08 51 13 Aluminum Windows.

G. Gravity roof ventilator: Standard ventilator complete package.

H. Provide drip lips at door heads of swing doors.

I. Louvers:
   1. Manufacturer's standard fixed louver.
   2. Provide framing required to support louver.
   3. Provide insect screen for each louver.
   4. Finish: To match building panels.

J. Provide weatherproof roof curbs and metal flashings at roof penetrations.

2.09 PAINTING

A. Structural steel and other framing members: 1 shop coat "10-99 Tnemec Primer", or equal; apply 1 field coat of same primer to field bolts and serious abrasions to shop coat of primer after erection; 2.4 mdft (610 microns dft) minimum.

B. Metal wall and roof panels and accessories: As specified herein before.

C. Furnish four 1-pint (568 cm^3) cans of touch-up paint for each color selected.

2.10 COLORS

A. Exterior wall and roof panel color: Selected from manufacturer's full range of “Kynar 500” colors.

PART 3 EXECUTION

3.01 INSTALLATION

A. Verify foundations are installed correctly.

B. Verify anchor bolts are installed as indicated on anchor bolt Shop Drawings.

C. Erect pre-engineered building in accordance with manufacturer’s instructions, Drawings, and other erection documents.

D. Provide temporary bracing, shoring, blocking, bridging, and securing of components as required during erection process.

END OF SECTION

1) James K. Wood
2) Thomas Deibert
3) Matthew Palan
4) Katie A Fuchs

SECTION 20 05 13 – COMMON WORK RESULTS FOR FACILITY SYSTEMS PIPING

PART 1 GENERAL

1.01 SECTION INCLUDES

A. Pipe materials.

B. Fittings, unions, flanges, and couplings.

C. Welding fittings.

D. Piping identification.

E. Pipe coating and wrapping.

F. Tie rods.

G. Pipe joining methods.

H. Cleaning and protection.

I. Leakage tests.

J. Thrust restraints.

K. Piping schedules.

1.02 DEFINITIONS

A. Pipe Class Specifications define pipe materials, dimensional standards, and wall thickness. Also defined are other components of piping system, including fittings, joints, flanges, and connection methods as applicable. Maximum allowable working pressure and associated temperature are provided for reference. Some Pipe Class Specifications also include notes and comments that provide additional direction on use, limitations, and installation of piping system.

1.03 INFORMATIONAL SUBMITTALS

A. Quality assurance data:
   1. Certificates of compliance with standards specified for pipe, fittings, accessories, and specialties.
   2. Welding procedure specifications and welding operator performance qualifications in accordance with ASME “Boiler and Pressure Vessel Code”, Section IX, upon request.

1.04 QUALITY ASSURANCE

A. Regulatory requirements:
   1. Piping construction criteria shall conform to requirements of ASME B31 as applicable. Work shall also comply with applicable state and local codes.

2. Piping connected to pressure parts under jurisdiction of ASME "Boiler and Pressure Vessel Code": In accordance with ASME "Boiler and Pressure Vessel Code" and state and local codes.
3. Piping not covered by ASME "Boiler and Pressure Vessel Code": In accordance with ASME B31 "Code for Pressure Piping" and state and local codes.
4. Comply with applicable requirements of state and local plumbing codes including but not limited to NSF 61 requirements for potable water piping and fittings.

B. Certifications: New materials and equipment shall bear manufacturer's name, model number, or other identification marking.

C. Pipe spools shall contain piece identification mark on each end of spool.

D. Piping material shall be new. Materials showing signs of scaling or rust will be rejected.

E. All grooved couplings, fittings, valves, and specialties shall be the products of a single manufacturer. Grooving tools shall be of the same manufacturer as the grooved components.
1. All castings used for couplings housings, fittings, or valve and specialty bodies shall be date stamped for quality assurance and traceability.

F. Welding requirements:
1. Qualification of welding procedures to be used and welding operators shall be in accordance with ASME "Boiler and Pressure Vessel Code," Section IX.
2. Welding materials and procedures for piping shall conform to ASME B31 and applicable state and local regulations.
3. Employ certified welders in accordance with ASME "Boiler and Pressure Vessel Code," Section IX, and AWS D1.1.
4. Welding inspection personnel shall be qualified in accordance with AWS QC1.
5. Maintain records in accordance with requirements of ASME B31.

1.05 DELIVERY, STORAGE, AND HANDLING

A. Weld end larger than 2" (50 mm): Fit pipe with protective end caps. Seal with waterproof tape.

B. Female opening 2" (50 mm) and smaller: Install plastic insert and seal with waterproof tape.

C. Nonflanged nipples 2" (50 mm) and smaller: Fit pipe with plastic cap and seal with waterproof tape.

D. Flanged opening: Bolt 1/2" (13 mm) waterproof disk with 1/8" (3 mm) rubber gasket. Use at least half available holes.

PART 2 PRODUCTS

2.01 DESIGN REQUIREMENTS

A. Pipe, fittings, valves, and accessory material shown on Drawings and as necessary for complete piping system with connections to equipment. Provide drains required to drain low points in piping and vents required to vent high points in piping. Provide piping for testing, startup, cleaning, and operation of system.

B. Provide pipe, fittings, valves, and accessory material necessary for following piping not shown on Drawings:
   1. Vents and drains for equipment to which piping connections are made or which are installed under this Contract. Provide piping to drains from equipment including, but not limited to, level alarms, meter bodies, transmitters, steam trap blow connections.
   2. Piping, not shown on Drawings, but required for proper operation of piping system and equipment, including drain valves required to drain all low points in piping and vent valves required to vent all high points in piping for testing, start-up, and operation.
   3. Metering instruments and regulating apparatus, including pressure gages, thermometers, controllers, traps, and other appurtenances as required for satisfactory operation of piping system and proper functioning of such instruments and controls.
   4. Flanges, unions, bolting material, gaskets, reducing fittings, bushings, and adapters required to connect piping to equipment, valves, in line specialties, etc.
   5. Temporary piping and accessories required for placing equipment and piping into initial service including, but not limited to, cleaning and hydrostatic testing. Arrangement of piping and supports shall be submitted to Owner for review.
   6. Blind flanges, caps, or plugs of appropriate class to close unused openings in equipment or piping provided by others.
   7. Flanges as required for connection to equipment by others.

C. Piping arrangement: Fire protection, plumbing and HVAC piping are generally schematically routed. Contractor shall vary location of piping and ducts to suit actual conditions, provide for access and clearances, and provide for thermal expansion. Field-fabricate and erect to provide workable arrangement with convenient access to valves and specialty items. Piping arrangement shall allow for thermal expansion and clearance after insulation is installed.
   1. Route piping parallel to building lines, except for slope.
   2. Protection of electrical equipment: Avoid locating pipe, joints, specialties, valves, etc. over electrical equipment to meet requirements of Article 110 of NEC. Provide drip pans over electrical equipment as approved by Owner where routing of piping over electrical equipment is unavoidable.
   3. For equipment, valves, etc. with connections less than line size, locate reducers at equipment or valves to minimize length of reduced diameter piping.
   4. Contractor shall note on record drawings modifications made to piping systems.

D. Provide pipe, fittings, accessories, and appurtenances required by each Pipe Class Specification.

E. Maintain a minimum of 3” (75 mm) clearance between pipes. For insulated piping, clearance shall be from outside surface of insulation.

2.02 PIPE MATERIALS

A. Pipe materials, pressure class, schedule, and type of joints shall conform to Pipe Class Specifications referenced in Pipe Schedule.

B. If pipe wall thickness specified is not available, use next heavier wall thickness.

C. Comply with ASME B31 and, where applicable, ASME “Boiler and Pressure Vessel Code.”

2.03 FITTINGS - GENERAL

A. Material, wall thickness, and pressure class: As specified in article "Pipe Materials," unless otherwise noted.

B. Use long radius fittings, except where noted on Drawings to use short radius fittings.

C. Provide dielectric unions or flanges at connections between ferrous and nonferrous piping or equipment.

D. For soil and waste piping, use 45° Y fittings and long sweep quarter, eighth or sixteenth bends.

2.04 UNIONS, FLANGES, AND COUPLINGS

A. Pressure class, material, and facing: As specified in article "Pipe Materials."

B. Where union, flanges, and couplings are not specified in Pipe Class Specification, provide as follows:
   1. Pipe size 2" (50 mm) and smaller: Malleable iron unions for threaded ferrous piping; cast bronze or wrought copper unions for copper piping with soldered or brazed joints. For nonmetallic piping provide unions of same material as pipe.
   2. Pipe size 2-1/2" (64 mm) and larger: Forged steel weld neck or slip-on flanges for ferrous piping; bronze flanges for copper piping. For non-metallic piping, provide flanges of same material as pipe. Provide 1/8" (3 mm) thick preformed synthetic fiber gaskets, Garlock "Blue-Gard 3000," or equal.
   3. Grooved end pipe: Two ductile iron housing clamps to engage and secure grooved pipe ends, designed to permit angular deflection, contraction, and expansion where required; C-shape FlushSeal ®, or Center-Leg composition sealing gasket, steel bolts, nuts, and washers; use galvanized couplings for galvanized pipe.

2.05 WELDING FITTINGS

A. Material and wall thickness: As specified in article "Pipe Materials."

B. Use welding tees for socket-welded piping and for field-fabricated branch tees in butt-welded piping.

C. Nozzle-welded branches or "Weldolets" and "Threadolets" will be permitted instead of butt welding tees for shop-fabricated steel piping provided that such nozzles are fabricated in accordance with ASME B31. Use tees for branches in non-steel piping.

D. Mitering of pipe to form elbows, notching straight pipe to form tees, and similar construction will not be acceptable for pressure piping except where specifically permitted in Pipe Class Specifications.

2.06 PIPE SLEEVES

A. Provide sleeves for piping passing through building structure, except where otherwise shown on Drawings.

B. Through footings: Service weight cast iron.

C. Other locations below grade: Cast iron or standard weight wrought iron pipe.

D. Above grade: Steel pipe, sheet steel not lighter than 16 U.S. Standard Gauge, or fiberglass with 1/4" (6 mm) minimum wall thickness; or thermoplastic construction, Pipeline Seal and Insulator, Inc. Link-Seal "Century-Line," or equal.

E. Size:
1. Foundations and footings: 4" (100 mm) larger than carrier pipe plus insulation where piping system is to be insulated.
2. Walls and floors: 2" (50 mm) larger than carrier pipe plus insulation where piping system is to be insulated.
3. Floors: Extend 4" (100 mm) above floor.

2.07 PIPE SLEEVE SEALS

A. General purpose:
1. Construction:
a. Pressure plate: Reinforced nylon polymer.
b. Bolts and nuts: Galvanized steel.
c. Sealing element: EPDM.
2. Temperature limits: -40°F to 250°F.
3. Manufacturer: Pipeline Seal and Insulator/Thunderline “Link-Seal” Model C.

B. High temperature/fire rated:
1. Construction:
a. Pressure plate: Galvanized steel.
b. Bolts and nuts: Galvanized steel.
c. Sealing element: Silicone.
2. Temperature limits: -67°F to 400°F.
3. 1-hour fire rated.
4. Manufacturer: Pipeline Seal and Insulator/Thunderline “Link-Seal” Model T.

C. Hydrocarbon services:
1. Construction:
a. Pressure plate: Reinforced nylon polymer.
b. Bolts and nuts: Galvanized steel.
c. Sealing element: Nitrile.
2. Temperature limits: -40°F to 210°F.
3. Manufacturer: Pipeline Seal and Insulator/Thunderline “Link-Seal” Model O.

2.08 PIPE MARKERS

A. Type: Snap-on with arrows.
1. Lettering:
a. Size: Use 1-1/4" high letters for pipes with outer covering 2-1/2" diameter or larger; use 3/4" high letters for pipes with outer covering smaller than 2-1/2".
b. Lettering subject to review.
2. Banding:
a. Snap on or nylon wire ties.

b. Color code: ASME Standard A13.1.

3. Manufacturer: Seton “Setmark,” or equal.

B. Type: Self-sticking markers indicating contents of pipe.

1. Lettering:
   a. Size: Use 1-1/4" high letters for pipes with outer covering 2-1/2" diameter or larger; use 3/4" high letters for pipes with outer covering smaller than 2-1/2".
   b. Lettering subject to review.
2. Banding:
   a. Type: Self-sticking tape, 2" wide; with direction flow arrows.
   b. Color code: ASME Standard A13.1.
3. Manufacturer: Craftmark “Duramark System,” or equal.

2.09 PIPE COATING AND WRAPPING

A. Furnish direct-buried, black steel pipe with factory-applied coal tar enamel and bituminous pipe wrap. Joints shall be hand wrapped with half-wrap felt over coal tar enamel base coat. Install piping with passive cathodic protection.

2.10 TIE RODS

A. Install to restrain movement of pressure piping when required.

B. Steel plate and rods: ASTM A36.

C. Steel bolts: ASTM A325.

PART 3 EXECUTION

3.01 INSTALLATION - GENERAL

A. Install piping as shown on Drawings, as specified, and in accordance with manufacturer’s recommendations. Hot and cold potable water piping and sanitary and storm drainage systems shall comply with state and local plumbing codes.

B. Modify pipe routing as required to clear building structure, openings, lights, ducts, and work of other trades.

C. Route piping parallel to building lines except for slope.

D. Provide sufficient unions and flanges to permit removal of equipment.

E. Spacing of piping shall be adequate to permit servicing valves and specialties and replacing sections of pipe.

F. Install piping above suspended ceiling areas to allow for suspended ceiling panel removal.

G. Slope pipe to permit complete draining. Install drain valves at low points.

H. Provide nuts, bolts, gaskets, and washers for complete and proper installation.

I. Warning tape shall be installed over each underground pipe. For underground non-metallic pipes, provide trace wire.

J. Furnish direct buried steel piping with renewable cathodic protection when indicated.

K. Install Double wall HDPE corrugated drain pipe, PVC perforated drain pipe, and ABS perforated drain pipe in accordance with ASTM D2321 and manufacturer's recommendations.

3.02 PROVISIONS FOR PIPE EXPANSION

A. Provide bends, offsets, or loops in piping not detailed on Drawings as required to permit pipe expansion due to temperature change and equipment movement.

B. Provide sufficient flexibility in copper piping to eliminate stress transmission to fixtures.

C. See Section 20 05 29 for additional pipe expansion and support requirements.

3.03 PIPE JOINING METHODS

A. Comply with Pipe Class Specifications listed under article "Pipe Materials" and with requirements of ASME B31, unless otherwise indicated.

B. Threaded joints:
1. Clean-cut threads, ream pipe ends, and remove burrs.
2. Apply suitable lubricating, noncorrosive, flexible pipe joint compound to male threads only.

C. Flanged joints:
1. Clean mating surfaces of flanges.
2. Install gasket and tighten bolts evenly.

D. Solder joints:
1. Cut tube square, ream end, and remove burrs.
2. Clean tube end and fitting socket to bright metal.
3. Apply flux to both surfaces, preheat, and feed solder until joint space is filled.
4. Wipe off excess solder, leaving small fillet, remove excess flux.

E. Press mechanical joints:
1. Press mechanical connections shall be made in accordance with manufacturer's recommendations.
2. Cut tube square, ram end, and remove burrs.
3. Tubing shall be fully inserted into fitting and marked at shoulder.
4. Fitting alignment shall be checked against mark to ensure tubing is fully inserted into fittings.
5. Joints shall be pressed using tool approved by manufacturer.

F. Weld joints:
1. Cut pipe square and prepare pipe ends for welding as required by ASME B31.
2. Workmanship shall conform to details and requirements of ASME B31.

G. Brazed joints:
   1. Cut tube square and prepare for brazing as required by ASME B31.
   2. Workmanship shall conform to details and requirements of ASME B31.
   3. Qualifications of brazing procedures and brazing operators shall be in accordance with ASME "Boiler and Pressure Vessel Code," Section IX, Part C.

H. Mechanical grooved joints:
   1. Pipe grooving shall be in accordance with manufacturer's recommendations.
   2. Ream each piece of pipe prior to erection. Inspect each piece of pipe and fittings before installing.
   3. Coat pipe ends with lubricant to facilitate installation. Entire coupling installation shall be done in accordance with manufacturer's recommendations.
   4. The gasket style and elastomeric material (grade) shall be verified as suitable for the intended service. Gaskets shall be molded and produced by the grooved coupling manufacturer.
   5. The grooved coupling manufacturer's factory trained field representative shall provide on-site training for contractor's field personnel in the proper use of grooving tools, application of groove, and installation of grooved piping products.
   6. The factory trained representative shall periodically visit the jobsite to ensure best practices in grooved product installation are being followed. Contractor shall remove and replace any improperly installed products.

I. Bell, leaded, and plain-end joints:
   1. Gasketed joints: Lubricate ends, install gasket, and use winch or jack to pull pipe together.
   2. Calk joint:
      a. Calk with oakum to 1" (25 mm) from end of bell.
      b. Fill with 1 continuous pour of lead, 1" (25 mm) minimum depth.
      c. Calk sufficiently to form a tight seal.

J. Cast iron soil pipe to clay tile:
   1. Cast iron pipe shall enter bell of clay tile or fitting.
   2. Wrap joint with 4" (100 mm) wide strip of asphalt-impregnated or fiberglass cloth.
   3. Cast joint in block of concrete 24" (600 mm) long and 6" (150 mm) minimum cover; reinforce with wire mesh in concrete completely around joint.

K. Ductile iron bell and spigot to carbon steel:
   1. Roll ASTM A36 steel plate and weld to carbon steel pipe.
   2. Plate thickness shall be as necessary to have outside diameter of steel pipe match outside diameter of ductile iron pipe.
   3. Weld locking ring to steel pipe.
   4. Contractor, at its option, may use oversized gaskets and weld only locking ring to steel pipe.

L. Threaded pipe to cast iron pipe: Spigot connector.

M. Other joints and joining methods: In accordance with Pipe Schedule and Pipe Class Specifications.

3.04 LEAKAGE TESTS

A. Notify Engineer and Owner of intent to test piping at least 1 week prior to test. Test in presence of Engineer and Owner, unless notified otherwise.

B. Refrigeration piping:
   1. Joints and connections shall be examined for apparent faults before testing.
   2. Test at not less than lower of design pressure or setting of pressure relief device protecting system.
   3. Test medium shall be nitrogen gas or refrigerant of type to be used in equipment. Use halide leak detector to locate small leaks.

C. Vents and gravity drainage piping: Test in accordance with local plumbing code.

D. Other piping: Test hydrostatically in accordance with ASME B31.

E. Provide pumps, compressors, meters, gages, piping, fittings, accessories, and labor required to conduct tests.

F. Isolate equipment that may be damaged by test pressure.

G. Refit joints indicating leakage and replace defective pipe, fittings, and accessories.

3.05 CLEANING AND PROTECTION

A. Remove foreign material from pipes before erection.

B. Close ends of partially erected systems.

C. Remove temporary preservative coatings from valves and accessories.

D. Flush or otherwise clean systems after erection.

E. Prior to conducting final performance test, Contractor shall verify that strainers are clean.

F. Contractor shall be responsible for malfunctioning of pumps, valves, controls, or other equipment due to presence of foreign material. Clean, repair or replace malfunctioning equipment at no cost to Owner.

G. Disinfect potable water piping as required by health authority having jurisdiction.

H. Thoroughly flush lines after disinfection until extremities indicate same chlorine residual as supply water.

3.06 PIPE IDENTIFICATION

A. Provide pipe markers on new piping exposed in equipment rooms, accessible pipe shafts, unfinished basement areas, unfinished storage rooms, janitor's closets, tunnels, and other areas where directed.

B. Install markers on both horizontal and vertical section of pipe at points where pipes pass through walls, floor, or ceiling, and at each valve. In tunnels, markers shall be no greater than 20' (6 m) apart, or 1 marker minimum for sections less than 20' (6 m).

3.07 THRUST RESTRAINTS

A. Required for unrestrained buried pressure piping at change of direction.

B. Install thrust blocks or approved restraints in accordance with requires of NFPA 24.

3.08 PIPE SCHEDULE

Service	Pipe Description	Piping Class Specification [1]	Design Temp. (°F)	Operating Temp. (°F)	Design Pressure (psig)	Operating Pressure (psig)	Test Pressure (psig)	Testing Method [2]
Potable Water Upstream of Backflow Preventer	AWWA C151 Cement-lined Ductile Iron	ADI1	60	45	125	60	188	Hydrostatic
Potable Water:			60	45	125	60	188	Hydrostatic
2" and smaller								
	ASTM B88 Hard-Drawn Copper	ACU1						
	ASTM F876 PEX	APE5						
	ASTM D 2846 CPVC	APV3						
Potable Water (Buried Interior and Exterior):			60	45	125	60	188	Hydrostatic
2-1/2" and smaller								
	ASTM B88 Soft Annealed Copper	ACU2						
	ASTM F876 PEX	APE5						
Refrigerant liquid and gas (except ammonia)								
1/2" and smaller:	ASTM B280 ACR Soft-Annealed Copper	(ACU3)						See paragraph this section
4-1/8" and smaller:	ASTM B280 ACR Hard-Drawn Copper	(ACU3)						
Refrigerant Vents	ASTM A53 Gr. B Steel	ACS2						
Relief Vents	ASTM A53 Gr. B Steel	ACS2						

Service	Pipe Description	Piping Class Specification [1]	Design Temp. (°F)	Operating Temp. (°F)	Design Pressure (psig)	Operating Pressure (psig)	Test Pressure (psig)	Testing Method [2]
Drain Piping Including Sanitary Drains, Sewers, Vents, Stacks, Storm Drains, Plenum Drains, and Coil Condensate Drains:								
2" and smaller:								
	ASTM B306 Hard-Drawn Copper	ACU4						
	ASTM A53 Gr. B Galvanized Steel	AGS3						
	ASTM A888 No-Hub Cast Iron	ACI2						
	ASTM D2665 DWV PVC (Do not use PVC above suspended ceiling or in air plenums)	APV1						
2-1/2" and larger								
	ASTM A888 No-Hub Cast Iron	ACI2						
	ASTM A53 Gr. B Galvanized Steel	AGS3						
	ASTM B88 Hard Drawn copper	ACU4						
	ASTM D2665 DWV PVC (Do not use PVC above suspended ceiling or in air plenums)	APV1						

Service	Pipe Description	Piping Class Specification [1]	Design Temp. (°F)	Operating Temp. (°F)	Design Pressure (psig)	Operating Pressure (psig)	Test Pressure (psig)	Testing Method [2]
Sewer and Drain Piping Including Sanitary Drains, Sewers, Vents, Stacks, Roof Drains, Plenum Drains, and Coil Condensate Drains (Buried Interior/Exterior):								
2" and smaller								
	ASTM B306 Hard-Drawn Copper	ACU4						
	ASTM D2665 DWV PVC	APV1						
2-1/2" and larger								
	ASTM A74 Cast Iron, or	ACI1						
	ASTM B306 Hard Drawn Copper	ACU4						
	ASTM D2665 DWV PVC	APV1						

Notes:
[1] Where multiple Pipe Class Specifications are specified, selection of material is at Contractor's option.
[2] Testing in accordance with ASME B31 unless noted otherwise.

END OF SECTION

Stanley Consultants INC.

PIPE CLASS SPECIFICATION - ACI1

PIPE	MATERIAL	ASTM A74 CAST IRON	
	SIZE	2" THRU 15"	
	THICKNESS (1)	SV	
JOINT	TYPE (2)	HUB AND SPIGOT CAULKED	HUB AND PLAIN END COMPRESSION TYPE
	MATERIAL	ASTM B29 LEAD AND OAKUM, OILED	ASTM C564 NEOPRENE GASKET
FITTINGS	MATERIAL	ASTM A74 CAST IRON	ASTM A74 CAST IRON
	MINIMUM WALL (1)	SV	SV

GENERAL NOTES & COMMENTS:

1. AS APPROVED BY STATE AND LOCAL PLUMBING CODES.
2. PUSH-ON COMPRESSION TYPE JOINTS SHALL ONLY BE USED WHEN PERMITTED BY STATE AND LOCAL CODES.

NO.	REVISION	DATE	DESIGN	CHECK	APVD	
						DWV
						CAST IRON SOIL PIPE
						NO.
0	REVISION 0	14-Dec-04	AAM	AGP	MAE	**ACI1**

M-1776

Stanley Consultants INC.

PIPE CLASS SPECIFICATION - ACI2

PIPE	MATERIAL	ASTM A888 CAST IRON
	SIZE	1-1/2" THRU 15"
	THICKNESS	ASTM A888
JOINT	TYPE	ASTM C1277 HUBLESS SHIELDED COUPLING
	GASKET	ASTM C564 NEOPRENE ELASTOMERIC
	COMPRESSION CLAMP	300 SERIES STAINLESS STEEL
FITTI	MATERIAL	ASTM A888 CAST IRON
	MINIMUM WALL	ASTM A888

GENERAL NOTES & COMMENTS:

1. HUBLESS CONSTRUCTION SHALL BE USED ONLY WHEN PERMITTED BY STATE AND LOCAL CODES.
2. THIS SPECIFICATION IS FOR ABOVE GROUND DRAINAGE SERVICE ONLY.

NO.	REVISION	DATE	DESIGN	CHECK	APVD	
						DWV
						CAST IRON SOIL PIPE
1	REVISED NOTE 2	5-Jan-05	AAM	AGP	MAE	NO.
0	REVISION 0	14-Dec-04	AAM	AGP	MAE	**ACI2**

M-1778

Stanley Consultants INC.

PIPE CLASS SPECIFICATION - ACS2

MAWP	TEMP, °F	100	200	300	400	500	600	650	700	750	775
	PRESS, PSIG	200	200	200	200	170	140	125	110	95	87

PIPE	MATERIAL, ASTM	1/2" - 26"	A53 GR B TYPE E OR S
		28" - 48"	API5L GR B TYPE E OR S
	NOMINAL PIPE SIZES AND SCHEDULE	1/2" - 2"	XS
		2-1/2" - 38"	STD
		40" - 48"	XS

JOINT	TYPE	THREADED	SOCKET WELD	BUTT WELD	FLANGED
	USE FOR PIPE SIZES	1/2" - 2"	1/2" - 2"	2-1/2" - 48"	NONE
FITTINGS	MATERIAL, ASTM	A105	A105	A234 WPB	
	PRESS CL, ASME B16.11	2000	3000		
	MINIMUM WALL THICKNESS			MATCH PIPE	
	WELDING END			ASME B16.25	
	UNIONS	GROUND JOINT	GROUND JOINT	NONE	

FLANGES	MATERIAL, ASTM	A105 OR A516 GR 70
	PRESS CL, ASME B16.5, B16.47A	150
	FACING	1/16" RF SERRATED
	GASKETS ASME B16.20 ASME B16.21	WITH WELD NECK FLANGES: 304 SS SPIRAL WOUND FLEXITALLIC FLEXICARB STYLE CG OR EQUAL, UNLESS SPECIFIED OTHERWISE. WITH SLIP-ON FLANGES: 1/16" SYNTHETIC FIBER WITH NBR BINDER, KLINGER C-4400 OR EQUAL, UNLESS SPECIFIED OTHERWISE.
	BOLTS & NUTS	A193 GR B7 STUD BOLTS & A194 GR 2H HEAVY HEX NUTS

GENERAL NOTES & COMMENTS:

1. BACKING RINGS NOT PERMITTED.
2. BUTT WELD END PREPARATIONS
   A. NOMINAL PIPE WALL THICKNESSES 0.375" AND LESS: CONFORM TO ASME B16.25, FIGURE 2, DETAIL (A).
   B. NOMINAL PIPE WALL THICKNESS GREATER THAN 0.375": CONFORM TO ASME B16.25, FIGURE 2, DETAIL (A), OR FIGURE 5 OR 6 AS APPLICABLE.
3. FURNISH FLAT FACED FLANGES AND USE FULL-FACED GASKETS WHERE REQUIRED FOR CONNECTION TO CAST IRON FLANGES.
4. 300°F AND BELOW: FLANGES SHALL BE WELD NECK OR SLIP-ON.
   ABOVE 300°F: FLANGES SHALL BE WELD NECK.
5. BUTT WELD FITTINGS MAY BE WPB SEAMLESS OR WPBW WELDED.
6. ALL THREADED PIPE SHALL BE SEAMLESS (TYPE S).

NO.	REVISION	DATE	DESIGN	CHECK	APVD
2	SCHEDULE CHANGES	1-Oct-08	DDB	MSW	MAE
1	REV. GASKET & NOTES 2, 4	5-Jan-05	JSM	JC	MAE
0	REVISION 0	9-Dec-04	JSM	JC	MAE

ASME CLASS 150
TYPE E OR S CARBON STEEL
NO.
ACS2

M-1801

Stanley Consultants INC.

PIPE CLASS SPECIFICATION - ACU1

MAWP	TEMP, °F	100	150	200	250						
	PRESS, PSIG	150	150	135	125						

TUBING	MATERIAL	ASTM B88 HARD DRAWN COPPER	
	TUBING SIZE AND WALL THICKNESS	THRU 6"	TYPE K
		8"	TYPE L

JOINTS	TYPE	SOLDERED, FLANGED WHERE REQUIRED
	SOLDER	ASTM B32 GRADE Sb5 (95-5 TIN ANTIMONY)

FITTINGS	TYPE	ASME B16.18 CAST COPPER ALLOY
		ASME B16.22 WROUGHT COPPER AND COPPER ALLOY
	CONNECTIONS TO FERROUS PIPING OR EQUIPMENT	DIELECTRIC UNIONS OR FLANGES

GENERAL NOTES & COMMENTS:

1. THIS PIPE CLASS SPECIFICATION SHALL NOT BE USED FOR STEAM OR CONDENSATE, OR FOR FLAMMABLE OR TOXIC LIQUIDS OR GASSES. USE FOR COMPRESSED AIR SHALL BE LIMITED TO 3" NOMINAL SIZE AND LESS.
2. SOLDER SHALL BE "LEAD-FREE" (LESS THAN OR EQUAL TO 0.2% LEAD).

NO.	REVISION	DATE	DESIGN	CHECK	APVD	
						ASME CLASS 125
						HARD DRAWN COPPER
1	ADDED NOTE 2	26-May-06	TJL	MRF	MAE	NO.
0	REVISION 0	14-Dec-04	AAM	AGP	MAE	**ACU1**

M-1725

Stanley Consultants INC.

PIPE CLASS SPECIFICATION - ACU2

MAWP	TEMP, °F	100	150	200							
	PRESS, PSIG	150	150	135							

TUBING	MATERIAL	ASTM B88 SOFT ANNEALED COPPER	
	TUBING SIZE AND WALL THICKNESS	THRU 2-1/2"	TYPE K

JOINT	TYPE	FLARED TUBE
FITTINGS	MATERIAL	ASTM B62 ALLOY C83600
	TYPE	ASME B16.26 CAST COPPER ALLOY WITH FLARED NUT FOR EACH TUBE END
	CONNECTIONS TO FERROUS PIPING OR EQUIPMENT	DIELECTRIC UNIONS

GENERAL NOTES & COMMENTS:

						ASME CLASS 125
						SOFT ANNEALED COPPER
						NO.
0	REVISION 0	14-Dec-04	AAM	AGP	MAE	**ACU2**
NO.	REVISION	DATE	DESIGN	CHECK	APVD	

M-1726

Stanley Consultants INC.

PIPE CLASS SPECIFICATION - ACU3

MAWP	TEMP, °F	100	150	200	250						
	PRESS, PSIG	285	250	235	235						

TUBING	MATERIAL	ASTM B88 HARD DRAWN COPPER	
	TUBING SIZE AND WALL THICKNESS	THRU 4"	TYPE K

JOINT	TYPE	SOLDERED, FLANGED WHERE REQUIRED
	SOLDER	AWS A5.8 BCuP SILVER BRAZE
FITTINGS	MATERIAL	UNS C10200, C12000, C12200 OR C23000
	TYPE	ASME B16.22 WROUGHT COPPER AND COPPER ALLOY
FLANGES	MATERIAL	ASTM A105 WITH WROUGHT COPPER SOLDER JOINT TUBE ADAPTER
	PRESSURE CLASS	ASME B16.5 150
	FACING	1/16" RF SERRATED
	GASKET (1)	1/16" COMPRESSED NON-ASBESTOS
	BOLTS & NUTS	A307 GRADE B STUD BOLTS & A194 GRADE 2H HEX NUTS

GENERAL NOTES & COMMENTS:

1. MATERIAL SHALL BE SUITABLE FOR REFRIGERATION SERVICE.
2. THIS PIPE CLASS SPECIFICATION SHALL NOT BE USED FOR AMMONIA REFRIGERATION SYSTEMS.

						ASME CLASS 150
						HARD DRAWN COPPER
						NO.
0	REVISION 0	14-Dec-04	AAM	AGP	MAE	**ACU3**
NO.	REVISION	DATE	DESIGN	CHECK	APVD	

M-1910

Stanley Consultants INC.

PIPE CLASS SPECIFICATION - ACU4

TUBI	MATERIAL	ASTM B306 COPPER	
	TUBING SIZE AND WALL THICKNESS	1-1/4" THRU 6"	STD
JOIN	TYPE	SOLDERED	
	SOLDER	ASTM B32 GRADE Sb5, (95-5 TIN ANTIMONY)	
FITTI	TYPE	ASME B16.23 CAST COPPER SOLDER JOINT DRAINAGE	
	MATERIAL	ASTM B62 ALLOY C83600	

GENERAL NOTES & COMMENTS:

1. FOR ABOVE GROUND USE ONLY.

NO.	REVISION	DATE	DESIGN	CHECK	APVD	
						DWV
						COPPER DRAINAGE TUBE
						NO.
0	REVISION 0	14-Dec-04	AAM	AGP	MAE	**ACU4**

M-1772

Stanley Consultants INC.

PIPE CLASS SPECIFICATION - AGS3

MAWP	TEMP, °F	180									
	PRESS, PSIG	ATM									

PIPE	MATERIAL, ASTM	A53 GR B TYPE E OR S GALVANIZED CARBON STEEL	
	NOMINAL PIPE SIZES AND SCHEDULE	1-1/4" - 2"	XS
		2-1/2" - 6"	STD

JOINT	TYPE	THREADED
	USE FOR PIPE SIZES	1-1/4" - 6"

FTGS	MATERIAL, ASTM	A126
	TYPE	CAST IRON DRAINAGE FITTINGS WITH COMPOSITION COATING
	UNIONS	NONE

GENERAL NOTES & COMMENTS:

1. THIS SPECIFICATION IS FOR ABOVE GROUND DRAINAGE SERVICE ONLY.

						DWV
						GALV. CARB. STL.
						NO.
0	REVISION 0	9-Dec-04	JSM	JC	MAE	**AGS3**
NO.	REVISION	DATE	DESIGN	CHECK	APVD	

M-1770

Stanley Consultants INC.

PIPE CLASS SPECIFICATION - APE5

MAWP	TEMP, °F	73	140	180							
	PRESS, PSIG	150	110	100							

TUBING	MATERIAL	ASTM F876 CROSSLINKED POLYETHYLENE (PEX), HDB = 1250PSI (73°F)
	MATERIAL DESIGNATION CODE	PEX 5306, 5206, 5106, 5006
	TUBING	ASTM F876 AND F877
	NOMINAL PIPE SIZE AND SDR	3/8" - 2" 9

	TYPE	INSERT	COMP. SLEEVE	COMP. RING	MECHANICAL	COLD FLARING	PUSH-FIT
FITTINGS	STANDARD	F1807,F2159, F2834	F1865, F2080	F1960	F1961	F877	F2854
	USE FOR SIZES	3/8" - 2"	3/8" - 2"	3/8" - 2"	3/8" - 3/4"	3/8" - 2"	1/2" - 1 1/4"

GENERAL NOTES & COMMENTS:

1. INSTALL IN ACCORDANCE WITH MANUFACTURER'S RECOMMENDATIONS AND FITTINGS AND PPI STANDARDS.
2. MAXIMUM TEMPERATURE FOR CONTINUOUS HOT WATER CIRCULATION 140 °F TO MAINTAIN CHLORINE RESISTANCE.
3. MAXIMUM SIZE FOR RADIANT HEATING WATER 2".
4. PROVIDE SWEAT ADAPTERS FOR CONNECTION TO COPPER TUBING.
5. INSULATION NOT REQUIRED UNLESS SPECIFIED OTHERWISE.
6. PROVIDE MANUFACTURER'S STANDARD PIPING MANIFOLD WHERE NOTED ON DRAWINGS.
7. INSTALL IN ACCORDANCE WITH LOCAL PLUMBING CODE FOR DOMESTIC WATER SYSTEMS. FITTINGS SHALL BE SELECTED TO COMPLY WITH LOCAL PLUMBING CODE.
8. MATERIALS IN CONTACT WITH POTABLE WATER SHALL BE CERTIFIED IN ACCORDANCE WITH NSF/ANSI STANDARD 14 - PLASTIC PIPING SYSTEM COMPONENTS, NSF/ANSI STANDARD 61 - DRINKING WATER SYSTEM COMPONENTS - HEALTH EFFECTS, AND ANSI/AWWA C904.
9. TUBING INSTALLED IN CEILING CAVITY PLENUM SHALL BE PERMITTED PER NFPA 90A IF IT EXHIBITS A FLAME SPREAD INDEX OF 25 OR LESS AND A SMOKE DEVELOPMENT INDEX OF 50 OR LESS WHEN TESTED IN ACCORDANCE WITH ASTM E84. CHECK MANUFACTURER'S LIMITATIONS.
10. INDOOR INSTALLATION ONLY. PREVENT FROM OVEREXPOSURE TO SUNLIGHT (UV LIGHT).
11. FOR RADIANT HEAT APPLICATIONS CONTAINING OXIDATIVE OR FERROUS PARTS, UTILIZE TUBING WITH AN OXYGEN DIFFUSER BARRIER. (NOT ALLOWED FOR POTABLE WATER).
12. ELECTROFUSION FITTINGS SHALL BE LIMITED TO 140 °F MAXIMUM USAGE TEMPERATURE PER ASTM F1055.

						150 PSIG AT 73°F
						PEX TUBING
1	GENERAL	31-Mar-17	JJO	JC	MAE	NO.
0	REVISION 0	28-Apr-06	AGP	JJB	MAE	**APE5**
NO.	REVISION	DATE	DESIGN	CHECK	APVD	

M-1761

Stanley Consultants INC.

PIPE CLASS SPECIFICATION - APV1

PIPE	MATERIAL	ASTM D1784 POLY (VINYL CHLORIDE), PVC DWV	
	CELL CLASS	12454	
	PIPE	ASTM D2665	
	NOMINAL PIPE SIZE	1 1/4" - 24" SCHEDULE 40	
JOINTS & FITTINGS	TYPE	SOCKET	FABRICATED
	STANDARD	F2135, D2665, D3311	F1866
	USE FOR SIZES	1 1/4" - 24"	4" - 24"
	JOINTS	SOLVENT WELD TYPE WITH SOLVENT CEMENT.	
	SOLVENT	ASTM D2564	

GENERAL NOTES & COMMENTS:

1. INSTALL IN ACCORDANCE WITH MANUFACTURER'S RECOMMENDATIONS.
2. INSTALL IN ACCORDANCE WITH LOCAL PLUMBING CODE.
3. PIPING INSTALLED IN CEILING PLENUM SHALL BE PERMITTED PER NFPA 90A, IF IT EXHIBITS A FLAME SPREAD INDEX OF 25 OR LESS AND A SMOKE DEVELOPMENT INDEX OF 50 OR LESS WHEN TESTED IN ACCORDANCE WITH ASTM E84.
4. CONNECT TO TRAPS USING THREADED TRAP ADAPTERS.
5. FOR CONNECTIONS TO SCREW-TYPE CLOSET FLANGES, INSTALL SCREW-TYPE CLOSET FLANGES IN THE DRAINAGE SYSTEM BY MEANS OF A THREADED CONNECTION.
6. FOR CONNECTIONS TO CAULK-TYPE CLOSET FLANGES, SEE TRANSITIONS TO BELL-AND-SPIGOT PIPE.
7. FOR CONNECTIONS TO NONPLASTIC PIPE, USE FITTINGS AND ADAPTERS DESIGNED FOR THE SPECIFIC TRANSITION INTENDED.
8. FOR TRANSITIONS TO BELL-AND-SPIGOT PIPE, USE MECHANICAL COMPRESSION JOINTS OR CAULKED JOINTS. PACK CAULK JOINT WITH OAKUM OR HEMP AND FILL WITH MOLTEN LEAD.
9. FOR USE IN NON-PRESSURE APPLICATIONS WHERE THE OPERATING TEMPERATURE WILL NOT EXCEED 140 °F.
10. USE FOR DRAINAGE AND VENTING OF SEWAGE AND CERTAIN OTHER LIQUID WASTES. NOT FOR VENTING OF COMBUSTION GASES.
11. PIPE AND FITTING SHALL BE CERTIFIED TO THE NSF/ANSI 14 - PLASTIC PIPING SYSTEM COMPONENTS AND RELATED MATERIALS AND NSF/ANSI DMV.

NO.	REVISION	DATE	DESIGN	CHECK	APVD	
						DWV
2	GENERAL	31-Mar-17	JJO	JC	MAE	PVC PIPE
1	FORMAT & GENERAL	28-Apr-06	AGP	JJB	MAE	NO.
0	REVISION 0	14-Dec-04	AAM	AGP	MAE	**APV1**

M-1779

Stanley Consultants INC.

PIPE CLASS SPECIFICATION - APV3

MAWP	TEMP, °F	73	180								
	PRESS, PSIG	150	100								

PIPE	MATERIAL	ASTM D1784, CPVC 4120, HDB = 4000 PSI (73°F)	
	CELL CLASS	23447	
	PIPE	ASTM D2846	
	NOMINAL PIPE SIZE AND SDR	CTS 1/2" - 2"	11
JOINTS & FITTINGS	TYPE	SOCKET	FABRICATED
	STANDARD	D2846	F1970
	USE FOR SIZES	1/2" - 2"	1/2" - 2"
	JOINTS	SOLVENT WELD TYPE WITH SOLVENT CEMENT. FLANGE CONNECTIONS NOT ALLOWED.	
	SOLVENT	ASTM F493	

GENERAL NOTES & COMMENTS:

1. INSTALL IN ACCORDANCE WITH MANUFACTURER'S RECOMMENDATIONS.
2. INSULATION NOT REQUIRED UNLESS SPECIFIED OTHERWISE.
3. INSTALL IN ACCORDANCE WITH LOCAL PLUMBING CODE.
4. PIPING INSTALLED IN CEILING CAVITY PLENUMS SHALL BE PERMITTED PER NFPA 90A IF IT EXHIBITS A FLAME SPREAD INDEX OF 25 OR LESS AND A SMOKE DEVELOPMENT INDEX OF 50 OR LESS WHEN TESTED IN ACCORDANCE WITH ASTM E84.
5. FOR POTABLE WATER SERVICE, MATERIALS IN CONTACT WITH WATER SHALL BE CERTIFIED IN ACCORDANCE WITH ANSI/NSF STANDARD 14 - PLASTIC PIPING SYSTEM COMPONENTS AND ANSI/NSF STANDARD 61 - DRINKING WATER SYSTEM COMPONENTS - HEALTH EFFECTS.
6. USE FOR NONFLAMMABLE AND NONTOXIC LIQUID SERVICE ONLY. NOT FOR COMPRESSED AIR OR GAS SERVICE.
7. MAWPS LISTED ABOVE ARE FOR NON-SHOCK, NON-CYCLING SERVICE.

NO.	REVISION	DATE	DESIGN	CHECK	APVD	
						150 PSIG AT 73°F
						CPVC PIPE
1	GENERAL	31-Mar-17	JJO	JC	MAE	NO.
0	REVISION 0	28-Apr-06	AGP	JJB	MAE	**APV3**

M-1761

SECTION 20 05 19 – METERS AND GAGES FOR FACILITY SERVICES SYSTEMS

PART 1 GENERAL

1.01 SECTION INCLUDES

A. Meters including: Nutating disc meters.

B. Pressure gages and tank gages.

1.02 INFORMATIONAL SUBMITTALS

A. Product Data, include:
   1. Materials of construction.
   2. Pressure limits.
   3. Basis of operation.
   4. Schedules of equipment furnished.

PART 2 PRODUCTS

2.01 NUTATING DISC METERS

A. Casing: Bronze.

B. Disc: Reinforced synthetic polymer.

C. Working pressure: 150 psig.

D. Maximum temperature: 149ºF.

E. Connections: 1-1/2", ANSI 2-bolt flanges or threaded.

F. Service and size: Domestic Water 1-1/2”

G. Manufacturer: Neptune Measurement Company "Type T-10," or equal.

2.02 PRESSURE GAGES

A. Accuracy: ANSI B40.1, Grade B, 2% of span at midpoint of scale.

B. Size: 2-1/2" dial.

C. Connections: 1/4" NPT male thread.

D. Movement: Bourdon tube assembly with recalibration screw.

E. Scale:

Service	Range	Units
Potable water	0-100	psi

F. Manufacturer: Marsh Instrument Company Standard Model gage, or equal.

PART 3 EXECUTION

3.01 NUTATING DISC METERS

A. Mount in common discharge piping of condensate pumps served.

B. Furnish line-sized bypass pipe with globe valve for maintenance of meter without necessitating system shutdown.

C. Arrange piping to provide flooded meter at all times.

3.02 PRESSURE GAGE

A. Install gages in a loop around device measured so that a single gage may be used to measure both upstream and downstream pressure. Install pressure snubbers on both sides of gage to provide total isolation.

B. Install pressure gages across strainers at chilled water and potable water service entrances, and strainers 2-1/2" or greater in size.

C. Install pressure gages across pumps in potable water, heating water, chilled water, fuel oil, and gasoline service.

D. Install pressure gages across following pieces of equipment:
   1. Heat recovery chiller cooler bundle.
   2. Heat recovery chiller condenser bundle.
   3. Converter.

E. Install pressure gages on each side of steam pressure reducing station.

F. Install gages where specifically indicated on piping details.

END OF SECTION

SECTION 20 05 23 – GENERAL DUTY VALVES AND ACCESSORIES

PART 1 GENERAL

1.01 SECTION INCLUDES

A. Valves shown on Drawings, mechanical standards, mechanical details, and valve schedule.

B. Valves not shown on Drawings including:
   1. Vent and drain valves for equipment installed under this Contract.
   2. Piping high-point vents and low-point drains.
   3. Connections to metering instruments and controls including pressure gages, transmitters, controllers, traps, and appurtenances required for proper functioning of instruments and controls.
   4. Temporary valves and accessories required for placing equipment into initial service.
   5. Valves inherent to operation or protection of equipment installed under this Contract.
   6. Plumbing isolation valves for each restroom group.

C. Accessories.

1.02 ACTION SUBMITTALS

A. Shop Drawings:
   1. Certified drawings for each type and size of valve. As a minimum, Drawings shall contain:
      a. Valve tag numbers (if shown on drawings).
      b. Materials of construction.
      c. Valve end-to-end and envelope dimensions with operators.
      d. Valve weight including operator if applicable.
      e. Weld end preparation details.
      f. Operator information.
      g. Special features such as vacuum service, locking device, limit switches, etc.
      h. Design conditions.
   2. Wiring diagrams for field installation of components.

1.03 CLOSEOUT SUBMITTALS

A. Operation and maintenance data.

1.04 QUALITY ASSURANCE

A. Valves shall be of same manufacturer for each class of piping and insofar as practicable for entire Project.

B. Design and construct Steel and iron valves in accordance with ASME B16.10 and ASME B16.34.

C. Valves in potable water service shall comply with applicable requirements of state and local plumbing codes including, but not limited to, NSF 61 requirements.

1.05 DELIVERY, STORAGE, AND HANDLING

A. Preparation for shipment:
   1. Protect internal parts against rust and corrosion.
   2. Protect threads, flange faces, grooved ends, and weld ends.
   3. Set angle, gate, and globe valves closed to prevent rattling.
   4. Set ball and plug valves open to minimize exposure of functional surfaces.
   5. Set butterfly valves closed or slightly open.
   6. Block check valves in either closed or open position.

B. Storage precautions:
   1. Maintain valve end protection.
   2. Store valves indoors and maintain at higher than ambient dew-point temperature. If outdoor storage is necessary, store valves off ground in watertight enclosures.
   3. Use sling to handle large valves; rig sling to avoid damage to exposed parts. Do not use handwheels or stems as lifting or rigging points.

PART 2 PRODUCTS

2.01 MANUFACTURERS

A. Provide specified manufacturer when indicated in Valve Schedule. Substitutions not allowed.

2.02 DESIGN CRITERIA

A. Valve schedule contains requirements for valves. Following valves are specified elsewhere:
   1. Plumbing stop valves at fixtures are specified in Section 22 40 00.

B. Pressure class ratings shown in valve schedule are anticipated pressure classes only. Lower intermediate pressure class or special pressure class valves are acceptable provided their ratings meet or exceed design pressure and design temperature of system as specified in Valve Schedule.

C. Verify that valves meet or exceed design pressure and design temperature specified in Valve Schedule.

D. Provide high-point vent valves and low-point drain valves not shown on Drawings. Conform to following table unless indicated otherwise on Drawings. Automatic vents and manual vents as specified in section.

Service	Pipe Size	Vent/Drain Size
Vents	1/2” and smaller	Line size
Vents	3/4” and larger	3/4”
Drains	1/2” and smaller	Line size
Drains	3/4” to 2”	3/4”
Drains	2-1/2” to 4”	1”
Drains	6’’ to 10”	1-1/2”
Drains	12” and larger	2”

E. Valve body materials shall be equivalent to piping material, unless noted otherwise.

Piping Material	Valve Body Material
Carbon steel	ASTM A105, ASTM A216 Grade WCB or ASTM A216 Grade WCC
1-1/4 chromium-molybdenum	ASTM A182 Grade F11
2-1/4 chromium-molybdenum	ASTM A182 Grade F22 or ASTM A217 Grade WC9
9 chromium-molybdenum	ASTM A182 Grade F9 or ASTM A217 Grade C12
Stainless steel Type 304 or 304L	ASTM A182 Grade F304 or F304L or ASTM A351 Grade CF3 or Grade CF8
Stainless steel Type 316 or 316L	ASTM A182 Grade F316 or F316L. Grade CF3M or Grade CF8M
Copper ASTM B88 Type K	Bronze ASTM B584-C84400, or equivalent
CPVC F441	CPVC ASTM D1784 Cell Classification 23447
PVC ASTM D1785	PCV ASTM D1784 Cell Classification 12454
Ductile iron	ASTM A126 B cast iron, ASTM A395 or ASTM A536 ductile iron

F. Valve end preparations:
   1. Butt weld ends:
      a. Nominal pipe wall thickness 0.375" (10 mm) and less: ASME B16.25, Figure 2, Detail (a).
      b. Nominal pipe wall thickness greater than 0.375" (10 mm): ASME B16.25, Figure 5 or 6.
   2. Socket weld ends: ASME B16.11.
   3. Threaded joints: ASME B16.3 or ASME B16.11 as applicable.
   4. Grooved ends: AWWA C606.
   5. Solder joints: ASME B16.18.
   6. Flanged ends: ASME B16.1, ASME B16.5, ASME B16.47 or AWWA C207, as applicable.

G. Valve ends: In accordance with Data Sheets unless noted otherwise.

H. Valves shall be suitable for operator mounting (handwheel, bevel gear, motor operator, air actuator) with valve in any position without external support.

I. Check valves shall be suitable for operation in horizontal and vertical flow up piping arrangements.

2.03 WATER PRESSURE REDUCING VALVES

A. Service: Hydronic system automatic fill valves, potable water pressure reducing valves.

B. Type: Pressure reducing, self-contained.

C. Size: As shown on drawing.

D. Body: Bronze or iron construction.

E. Connections: Soldered, threaded, or flanged. Coordinate with Pipe Class Specification.

F. Maximum working pressure: 200 psig (1380 kPa).

G. Adjustable reduced pressure range: 25 to 75 psig (175 to 515 kPa).

H. Maximum temperature: 180°F (80°C).

I. NSF certified for potable water service.

J. Manufacturer: Victaulic/Bermad, Watts, Wilkins, or equal.

2.04 CHECK VALVES - SILENT

A. Body:
   1. Material: ASTM B26 or A536 ductile iron or cast steel.
   2. Valve style:
      a. 10” (250 mm) and smaller: Wafer.
      b. 12” (300 mm) and larger: Globe.

B. Plug or disc: ASTM B584 bronze, stainless steel, or elastomer coated ductile iron.

C. Torsion spring: Stainless steel.

D. Seat: ASTM B584 bronze, replaceable, welded in-nickel or elastomer (grade to suit service).

E. Pressure class: 150.

F. Maximum working temperature: 230°F (110°C).

G. Manufacturer: Victaulic Series 716, Cla-Val Series 580 (Wafer Style), Series 581 (Globe Style); Gulf Valve “Wafer Check”; Crane “Duo-Chek II”; or Metraflex.

2.05 GAGE COCKS

A. Service: Pressure gage isolation for low pressure air applications.

B. Size and connection: 1/4" (8 mm), threaded.

C. Body and plug material: Brass.

D. Cock: T-handle.

E. Maximum working pressure: 100 psig (690 kPa g).

F. Maximum working temperature: 100°F (260°C).

G. Manufacturer: Trerice Model 865-1, Ashcroft, or Wika.

2.06 VALVE IDENTIFICATION

A. Valve shall be given unique tag numbers. Coordinate valve numbering system with Owner.

B. Each valve shall have stamped stainless steel tag bearing valve tag number securely fastened to valve with 20-gage (0.9 mm) stainless steel wire.

C. When multiple, identical small-bore valves (less than 2-1/2” [64 mm]) are shipped in bulk, tags may be field installed. Other tags shall be factory installed.

2.07 ACCESSORIES

A. Hand wheels and levers:
   1. Provide unless noted otherwise. Levers shall be multiposition with positive locking device.
   2. Valves installed in areas inaccessible to platforms shall be provided with chain wheels. Provide chain wheel operators for manual valves with hand wheel operators in horizontal plane located more than 6’-6” (2 m) above floor, unless noted otherwise. Provide sufficient chain to bring operation down to 6’-6” (2 m) above floor.
   3. Hand wheels shall not exceed 24” (600 mm) diameter unless noted otherwise.
   4. Provide insulated handles for ball valves used in chilled water service. Nibco Nib-Seal or equal.

2.08 RELIEF VALVES

A. Service: Water.
   1. Size and connection:
      a. Inlet: 3/4" (19 mm), threaded. Verify for given design conditions.
      b. Outlet: 1” (25 mm), threaded. Verify for given design conditions.
   2. Body: Carbon steel.
   3. Packed lever.
   4. Set pressure: As shown on Drawings.
   5. Design conditions:
      a. Inlet pressure: 30 psig (205 kPa g).
      b. Outlet pressure: 0 psig (0 kPa g).
      c. Temperature range: 0-250°F (0-121°C).
   6. Manufacturer: Consolidated 19000 Series, Anderson Greenwood, or equal.

2.09 SOURCE QUALITY CONTROL

A. Hydrostatic tests:
   1. Subject valve to hydrostatic shell and seat leakage tests in accordance with MSS SP-61 for isolation valves, ASME B16.34 for isolation valves, and FCI 70-2 for control valves.
   2. Maximum seat leakage during closure tests shall not exceed following ml/h per inch (25 mm) of nominal valve size:
      a. Gates and globe: 10.
      b. Check valves: 40.

PART 3 EXECUTION

3.01 INSTALLATION

A. Install valves in accordance with manufacturer’s recommendations

B. Install valves with stems horizontal or in upright position unless shown otherwise on Drawings.

C. Install globe valves with flow direction from below to above seat.

D. Tighten valve glands as work is erected and add additional gland packing if required. Retighten glands after valves are placed in operation and brought up to operating pressure and temperature.

E. Replace valve gland packing of valves installed by this Contract which is determined to be in unsatisfactory condition.

3.02 FIELD QUALITY CONTROL

A. Hydrostatic tests: Valve shall be suitable for field hydrostatic pressure tests in closed position of 1.5 times design pressure of system.

B. Radiographic examination: Perform as required by code. Special class and intermediate class valves shall be radiographically tested in accordance with ASME B16.34.

3.03 VALVE SCHEDULE

VALVE SCHEDULE		
SERVICE	VALVE TYPE	DATA SHEET
Potable Water Upstream of Backflow Preventer		
3" and smaller	Ball or Gate	DS-4
4" thru 20"	Resilient Seat Butterfly	DS-3 DS-2
Potable Water		
3" and smaller	Ball or Gate	DS-4
4" thru 20"	Resilient Seat Butterfly	DS-3
Potable Water (Buried Interior and Exterior)		
2-1/2" and smaller	Ball or Gate	DS-4
3" and larger	AWWA Butterfly	DS-3
Chemical Treatment		
2" and smaller	PVC or CPVC Ball	Paragraph this section
2-1/2" and larger	PVC or CPVC Butterfly	Paragraph this section
HVAC and Plumbing Pump Discharge		
Check valves all sizes	Silent Check Valves	Paragraph this section

BALL VALVES – STEEL			DATA SHEET - DS-2	
Service		Steam service with design temp greater than 300°F (149°C)	Oil and Natural Gas	Water, Steam, Gas, or Air service with design temp less than 300°F (149°C)
Pressure Class		600 and above	300 and below	300 and below
MATERIALS	Body	Equivalent to pipe	Equivalent to pipe	Equivalent to pipe
	Ball:		Stainless steel	Stainless steel
	Class 1500 and below	410SS coated or A182-410 / Ram31		
	Class 2500 and above	Inconel 718 or A182-410/Ram31		
	Stems Class 1500 and below Class 2500 and above	 A276 Gr. 431 Nitrided or A638 Gr. 660/H.F. 431SS or A638 Gr. 660/H.F.	Stainless steel	Stainless steel
	Seats: Class 1500 and below Class 2500 and above	 410SS coated or A182-F22 CL3/H.F. Inconel 718 or A182-F22 CL3/H.F.	Nylon with seat ring and emergency gasket	PTFE or RPTFE
	Seat Ring		Equivalent to pipe	Equivalent to pipe
	Seals: Body Stem		 TFE TFE with emergency backup seal	 PTFE or RPTFE PTFE or RPTFE
CONSTRUCTION	Valve Style	Unibody	3-piece	Design Pressure less than or equal to 150 psig- 2 piece unless noted otherwise; Above 150 psig- 3 piece
	Design		Fire tested in accordance with API-607.	
	Bore Size	Full	Full	Full
	Valve end type	Welded	2” and less- Threaded 2.5” and larger- Flanged	2” and less- Threaded 2.5” and larger- Flanged
Manufacturer		Mogas, Valvtechnologies, or Conval	Neles-Jamesbury "Fire-Tite," Velan Marpac, Valvtechnologies	Neles-Jamesbury Corp., Lunkenheimer, Apollo, Velan

BUTTERFLY VALVES				DATA SHEET - DS-3		
Type		Resilient Seat		AWWA	High Performance	
Service		Water 250°F (121°C) and lower and air 200°F (93°C) and lower		Water 250°F (121°C) and lower	Water above 250°F (121°C) and steam	
Size		2" through 12" (50 mm – 300 mm)	14" through 20" (350 mm – 500 mm)	Exposed - 24" (600 mm) and larger, Direct Buried – all sizes	All sizes	
Pressure rating		200 psi bi-directional minimum disc, 250 psi body	150 psi bi-directional minimum disc, 200 psi body	AWWA C504 Class 150	ASME CL 150 & 300	ASME CL 600 & 900
MATERIALS	Body	Ductile Iron		Ductile Iron for Class 250, Cast Iron for Class 150	Equivalent to pipe (carbon steel or stainless steel)	
	Disc	Aluminized Bronze for water service, Ductile Iron for air service		Ductile Iron	Stainless steel as required for service	
	Shaft	416 Stainless Steel		304 Stainless steel	Stainless steel	
	Soft Seat	EPDM for water service, BUNA for air service		EPDM or BUNA	Synthetic rubber, metal, or fire safe as required for service	
	Hard Seat			316 Stainless steel	Stellite Gr. 21 Weld Overlay	
	Shaft Seal	Manufacturer's standard		Chevron V-type packing or bronze packing gland with TFE impregnated Teflon packing	Teflon or graphite packing as required for service	
	Coating	Not required for ductile iron body, manufacturer's standard acceptable		Manufacturer's standard		
CONSTRUCTION	Body	Extended neck Lugged unless noted otherwise		Provide mechanical joints for ductile iron piping systems and flanged joints otherwise	Lugged - Double offset unless noted otherwise	Lugged – Triple offset unless noted otherwise
	Shaft and Disc Connection	Shaft keyed to disk – pinned connection not allowed	Shaft keyed to disc preferred – stainless steel taper pins acceptable	Stainless steel taper pins	Stainless steel taper pins	

BUTTERFLY VALVES		DATA SHEET - DS-3	
Position indicator	Required	Required	Required
Hydrostatic and seat leakage	Factory test at 110% pressure rating	AWWA C504	FCI 70-2 or API 598
Manufacturer	Nibco Bray Keystone Series 60 Xomox Series 7500 Demco	Direct buried: Dezurik BAW Henry Pratt Mueller Val-Matic Exposed: Rodney Hunt Streamseal, Dezurik BAW, Henry Pratt, Val-Matic	Keystone K-LOK (ASME CL 150 & 300) Flowseal (ASME CL 150, 300, & 600) Vanessa Series 30,000 (ASME CL 150, 300, 600, & 900)

BRONZE AND IRON VALVES		DATA SHEET - DS-4		
		Gate, Globe, and Checks		Ball
Size		2” (50 mm) and Less	2-1/2” (65 mm) and Larger	4" (100 mm) and Less
Pressure class		150 psig (1035 k Pa g)at 220°F (104°C)	125 psig at 220°F (104°C)	125 psig (860 k Pa g)
MATERIALS	Body	Bronze	ASTM A126 Class B Cast Iron	Bronze
	Ball	n/a	n/a	Bronze
	Gate valve wedge	Bronze	Cast iron with bronze face rings	n/a
	Globe valve disc	TFE	Renewable Bronze	n/a
	Check valve disc	Bronze	Ductile Iron	n/a
	Stems	Silicon Brass	ASTM B16 Brass	Bronze
	Seats and Seals	Steam service- TFE Water, oil, gas- Buna-N	Bronze, ASTM B61	RPTFE
	Internals	Bronze	Renewable Bronze	
CONSTRUCTION	Stem	Inside screw with rising stem	Outside screw and yoke with Rising Stem	Blowout proof
	Packing	Aramid fibers with graphite	Aramid fibers with graphite	PTFE
	Bore Size	Full	Full	Full
	Ball valve body	n/a	n/a	2 piece
	Valve end type	Threaded, unless noted otherwise	Flanged, unless noted otherwise	Pipe Material Copper Steel / End Type Solder Threaded
Manufacturer		Nibco, Watts, Crane	Nibco, Watts, Crane	Nibco, Watts, Apollo

END OF SECTION

SECTION 20 05 29 – SUPPORTS AND ANCHORS FOR FACILITY SERVICES PIPING AND EQUIPMENT

PART 1 GENERAL

1.01 SECTION INCLUDES

A. Design of pipe support systems, equipment support systems and supplementary support steel.

B. Fabrication and installation of:
   1. Pipe and equipment supports.
   2. Supplementary support steel.

1.02 DEFINITIONS

A. Pipe or equipment support system: Collection of supports used to restrain movement and provide support to an entire piping system or equipment.

B. Pipe or equipment support system design includes, but not limited to the following:
   1. Determination of support locations, types of support, support reactions and displacements of pipe and/or equipment at support locations.
   2. Verification that pipe support system meets requirements of article “Pipe Support System Design.”

C. Pipe or equipment supports: Hangers, guides, rollers, slide supports, springs, anchors, struts, snubbers, or any other devices used to restrain movement or provide support to pipe or equipment.

D. Design categories of pipe supports are defined as follows. Following definitions are in addition to definitions of information and materials defined by MSS SP-58.
   1. Completely engineered supports:
      a. Supports where the specific component size is established by the individual support design.
      b. Details of each support shall be prepared containing all information specified in MSS SP-58, article "Pipe Hanger Assembly Drawings."
   2. Semi-engineered supports:
      a. Supports that are designed from similar support configurations from which a specific manufacturer component size can be established and applied to a group of (or like) supports.
      b. Loading and movement design criteria shall encompass most stringent conditions of group. Bill of Material for each support need not be established.
      c. Supports may be field fabricated from stock materials.
   3. Random supports: Supports which require no engineering and may be field-fabricated from stock materials.
   4. Pre-engineered: Manufacturer’s published pipe support components.

E. Supplementary support steel: All steel necessary to support pipe and equipment in addition to existing structure or new structure installed for this project. Existing or new structure is typically structural steel, reinforced concrete or concrete masonry units. Hereinafter, existing or new steel is referred to as “existing steel".
   1. Supplementary support steel includes, but is not limited to, the following:

a. Steel beams, posts, hangers, diagonal braces, plates, cut shapes, epoxy grouted anchor rods, studs and other similar types of construction, as required for support of pipe and equipment.
b. Localized stiffening of existing steel or supplementary support steel at pipe and equipment support connections.

2. Supplementary support steel shall include steel extending down to concrete floor slab where supporting pipe or equipment from above is prohibited by Engineer.
3. Supplementary support steel does not include standard pipe support hardware.

1.03 PIPE AND PIPE SUPPORT DESIGN RESPONSIBILITIES

Design Responsibility Schedule	
Design Temperature	less than 200°F
Pipe Size	2" diameter and smaller
Pipe Support System Design	Contractor
Pipe Support Design Category and Design Responsibility	Random Supports, by Contractor
Supplementary Support Steel Design (except as noted below)	Contractor
Design of Localized Stiffening of Existing and Supplementary Support Steel	Contractor

1.04 ACTION SUBMITTALS

A. Shop Drawings: Supports for equipment noted in article “Quality Assurance”.

B. Quality assurance data:
1. Published pre-engineered standard pipe support components utilized on project. Include allowable loads.
2. Pre-engineered standard support certifications as defined in article "Pipe Support Design."

1.05 QUALITY ASSURANCE

A. Pipe hangers and supports, fabrication, and installation practices shall be in accordance with MSS SP-58.

B. Following shall be performed by or under direction of professional engineer licensed in State of Alaska and retained by Contractor. Submittals shall be signed and sealed by such engineer:
1. Design of major equipment supports including:
a. Dedicated Outside Air Supply (DOAS-1).
b. Unit Heater (UH).
2. Design of attachment of support to existing structure or supplementary support steel where attachment details and allowable loads are not included in published pre-engineered standard support data by manufacturer (e.g., weld requirements, bolts, anchor rods, expansion anchors, etc.)
3. Design of supplementary support steel designed by Contractor.
4. Design of localized stiffening of existing steel and supplementary support steel.

5. Support design shall be incorporated with metal building shop drawings and calculations. Refer to Section 13 34 19.

C. Contractor's professional engineer's seal is not required for design of support where published pre-engineered standard supports with published ratings, loads, and movements are used. Pre-engineered standard supports (including all components) shall be certified by Contractor as acceptable for intended use on this project. See article "Pipe Support Design" for certification requirements.

1.06 EXISTING CONDITIONS

A. Drawings of existing structure are available.

B. For existing structures, conduct necessary field measurements to determine or confirm structure dimensions, steel member locations and sizes, as applicable.

PART 2 PRODUCTS

2.01 ACCEPTABLE MANUFACTURERS

A. Anvil International.

B. Bergen Power.

C. Binder.

D. Carpenter & Paterson.

E. Cooper B-Line.

F. Lisega.

G. Piping Technology & Products.

H. Or equal.

2.02 PIPE SUPPORT SYSTEM DESIGN

A. Where possible, pipe support locations shall be located to prevent individual structural members from being excessively loaded to point that global stiffening of member is required.

B. Pipe support selection and application: Using pipe support spacing shown in MSS SP-58 Table 4 and Table A1, International Mechanical Code with following additional requirements:
   1. Additional supports are required at concentrated loads between supports such as flanges, valves, specialties, etc.
   2. Support spacing values in MSS SP-58 Table 4 shall be reduced by 25% when pipe changes horizontal direction between supports.

C. Provide seismic restraint of piping in accordance with SMACNA Seismic Restraint Manual and International Building Code. Seismic hazard level for building shall be D. Refer to MSS SP-127 for pipe support seismic design, selection, and application.

D. Incorporate seismic limit ties, guides, and stops to resist lateral loads.

E. Locate supports for pipe connected to equipment to limit equipment reactions to allowable reactions specified by equipment manufacturer.

F. Supports for pipe that terminate at existing pipe connections shall accommodate thermal movement and loads imposed by existing pipe.

2.03 PIPE SUPPORT DESIGN

A. Design all supports unless support components are sized on Drawings.

B. Conform to MSS SP-58.

C. Contractor shall design to accommodate hydrostatic testing of pipe when applicable.

D. Where pre-engineered standard supports are used, Contractor's design requirements shall include:
   1. Obtaining manufacturer's certification that manufacturer's support design conforms to above referenced standards.
   2. Verification that loads for particular support application(s) do not exceed manufacturer's specified allowable support loads.
   3. Where applicable, verification that pipe movement at support does not exceed manufacturers allowable.

E. Include type, size and length of welds and type, size, and number of bolts required for attachment of pipe support to support structure.

F. Where pipe routing is shown on Drawings, conduct necessary field measurements or analysis of Drawings if field measurements are not feasible as required to verify clearance and constructability of supports prior to support design and fabrication. Cost for redesign of supports and field modifications of new construction due to lack of field measurements or analysis of Drawings shall be borne by Contractor.

G. Supports inducing torsion in existing structural members are not permitted except where shown on Drawings.

H. Where supports connect to structural steel members and cause localized bending of member flanges or webs, stiffen member as necessary to limit localized bending stress to less than 3 ksi. Design of stiffeners and welds shall be by Contractor.

2.04 EQUIPMENT SUPPORT DESIGN

A. Design equipment support system, supports, and associated supplementary support steel.

B. Base equipment support design upon following parameters:
   1. Support loads.
   2. Equipment movements at supports.
   3. Equipment manufacturer's requirements.

C. Equipment support selection and application: MSS SP-58.

D. Equipment support design: MSS SP-58.

E. Where equipment supports are designed by entity other than equipment supplier, obtain equipment supplier's approval of support system.

F. Support design should account for possible occasional loading observed during operation.

2.05 PIPE AND EQUIPMENT SUPPORTS

A. Materials and manufacture: MSS SP-58 and ASME B31.9.

B. Supports and accessory items shall have manufacturer's standard shop-applied primer and standard finish coat, unless specified otherwise.

C. Provide insulation protection shields of sufficient size and gage to prevent crushing of insulation at supports.

D. Supports for pipe designed to receive anti-sweat insulation shall be sized to allow vapor barrier and insulation to be continuous through support. Provide insulation shields sized to prevent insulation damage at each support.

E. Beam clamps: For pipe sizes 6” and less, and/or piping loads under 600 lbs: Acceptable.

F. Neither chains nor straps shall be used as permanent pipe supports.

G. Pipe support component in contact with pipe shall be compatible with pipe material so that neither have a deteriorating action on each other. For piping under 150°F (66°C) a neoprene liner may be used to isolate piping from clamp-on pipe support component.

H. Stainless steel pipe in contact with carbon steel pipe support component shall be wrapped with a neoprene liner to prevent dielectric corrosion.

2.06 SUPPLEMENTARY SUPPORT STEEL

A. Shapes: ASTM A6.

B. Material: ASTM A36 or A572, Grade 50.

C. Design of supplementary support steel shall be in accordance with AISC "Specification for Structural Steel Buildings - Allowable Stress Design".

D. Supplementary support steel that induces torsion in support member is not permitted, except where shown on Drawings.

E. Design supplementary support steel as necessary to prevent excessive loads in existing steel members due to pipe support loads. Supplementary support steel is subject to review by Engineer.

F. Furnish supplementary support steel with loose clip angles for attachment to structure. Bolt connections to existing columns or other existing steel insofar as practicable. Where connections are common connections with existing steel, new bolts, washers, and nuts shall be supplied under this contract.

G. Supplementary support steel shall conform to requirements of Section 05 50 00 and 09 90 00.

H. Welding to beam flanges permitted only where welds are parallel to and directly opposite webs. Submit other welding details to Engineer for review.

I. Welding: AWS D1.1.

PART 3 EXECUTION

3.01 PIPING SUPPORTS

A. Fabrication and installation: MSS SP-58.

B. Pipe supports for piping systems requiring continuous vapor barriers:
1. Refer to Sections 20 07 00 and 40 07 00 for list of systems with continuous vapor barrier requirements.
2. Use factory assembled, pre-insulated supports when available.
3. Refer to article “Pipe and Equipment Support” for pipe designed with anti-sweat insulation.

3.02 EQUIPMENT SUPPORTS

A. Fabrication and installation: MSS SP-58.

B. Arrange supports to provide clear access to equipment and to maintain clear aisle and access ways. Arrangement of equipment supports shall be subject to review by Engineer.

C. Provide necessary anchor bolts, expansion anchors and anchor rods for mounting equipment to concrete. See Section 05 50 00 for requirements.

3.03 ADJUSTMENTS

A. After hydrostatic testing of pipe, adjust supports to appropriate cold settings.

B. Adjust supports to accommodate movements through entire range of operation. Monitor movements during startup and make final adjustments to assure proper support from cold to maximum temperature excursion specified in Pipe Code Schedule.

C. Ensure support hangs within 4° of vertical under all conditions. Adjust supports as required by design drawing.

D. Modify or replace supports or hangers that cannot be properly adjusted for full range of conditions.

E. Adjust supports as necessary to limit reaction to rotating equipment.

3.04 SUPPORT INSPECTION

A. Pipe hangers and supports, fabrication, and installation practices: MSS SP-58.

B. Inspection after installation and prior to hydrostatic testing:

1. Each hanger assembly shall be verified against hanger drawing to assure that components have been installed and are in proper position, including temporary hangers and supports that are required for hydrostatic testing.
2. Check threaded components of each hanger for proper thread engagement.
3. Locking nuts on threaded components, cotter pins, temporary locking devices (travel stops) and other locking means furnished with spring units shall be properly engaged.

C. Inspection at operating conditions: Inspect piping systems in their entirety to verify that no interference exists between pipe and/or pipe insulation and building structure or equipment.

END OF SECTION

1) Chad M. Finn
2) Timothy Schmitt

SECTION 20 05 48 – VIBRATION AND SEISMIC CONTROLS FOR FACILITY SERVICES SYSTEMS

PART 1 GENERAL

1.01 SECTION INCLUDES

A. Inertia bases.

B. Vibration isolators.

1.02 QUALITY ASSURANCE

A. ASHRAE 1980 Systems Handbook, Chapter 35, Table 27.

1.03 INFORMATIONAL SUBMITTALS

A. Product Data:
   1. Schedule of isolator materials.
   2. Isolator heights, both free and operating.
   3. Dimensions.
   4. Deflections.
   5. Isolation efficiency at lowest operating speed.

PART 2 PRODUCTS

2.01 PERFORMANCE REQUIREMENTS

A. Select isolation devices for minimum 95% isolation efficiency or based on minimum static deflection criteria.

B. Centrifugal blowers:
   1. Suspended: Use Type 5-7 hangers with deflection from blower minimum deflection guide.
   2. Floor-mounted: Use Type 3-D mount with deflection from blower minimum deflection guide.

C. Cabinet fans :
   1. Suspended: Use Type 5-7 supports with deflection from blower minimum deflection guide.
   2. Floor-mounted: Use Type 2-7 for 0.35" deflection, Type 3-7 for 0.75" deflections and Type 3-B-7 for deflections over 0.75".

2.02 BASE TYPE E

A. Base: Curb-mounted, extruded aluminum channel.

B. Isolators: 1" deflection spring isolators.

C. Seal: Neoprene.

D. Manufacturer: Mason Industries, Inc. Type CMAB, or equal.

2.03 TYPE 1 ISOLATOR MOUNTS

A. Type: Pad.

B. Base: Steel.

C. Pad: Molded neoprene.

D. Manufacturer: Mason Industries, Inc. Type WM, or equal.

2.04 TYPE 2 ISOLATOR MOUNTS

A. Type: Double deflection neoprene.

B. Attachments: Cast in metal inserts.

C. Minimum static deflection: 0.35".

D. Pad: Rib-molded neoprene.

E. Manufacturer: Mason Industries, Inc. Type ND, or equal.

2.05 TYPE 3 MOUNTS

A. Type: Spring-mounted.

B. Attachments: Leveling bolt; free-standing, laterally stable.

C. Housing: None.

D. Pad: 1/2" rib-molded neoprene.

E. Manufacturer: Mason Industries, Inc. Type SLF, or equal.

2.06 TYPE 4 MOUNTS

A. Type: Spring-mounted, restrained.

B. Attachments: Leveling bolt; free-standing laterally stable.

C. Housing: Vertical limit stop.

D. Pad: 1/2" rib-molded neoprene.

E. Manufacturer: Mason Industries, Inc. Type SLR, or equal.

2.07 TYPE 5 HANGERS

A. Type: Neoprene and spring in series.

B. Deflection: 0.30".

C. Manufacturer: Mason Industries, Inc. Type 30 N, or equal.

2.08 TYPE 6 HANGERS

A. Type: Neoprene and spring in series.

B. Deflection: Precompressed to 0.30".

C. Manufacturer: Mason Industries, Inc. Type PC30N, or equal.

2.09 TYPE 7 THRUST RESTRAINTS

A. Type: Neoprene and spring in series.

B. Deflection: Precompressed to 0.30", field-adjustable, 2" rated.

C. Thrust restraint: 900 lb per pair.

D. Attachments: Furnish with rods and angle brackets.

E. Manufacturer: Mason Industries, Inc. Type WBI, or equal.

2.10 FLEXIBLE PIPING CONNECTIONS

A. Service: Water and pumped condensate 2-1/2" and larger.
   1. Connections: Flanged or threaded.
   2. Restraining bolts: Rubber isolated.
   3. Provide control cable assemblies for units mounted on spring or neoprene mountings.
   4. Bellows: Nylon-reinforced neoprene, twin sphere.
   5. Hose, 2" and smaller: Seamless, corrugated bronze flexible bronze with braided cover. Mason Industries, Inc. BSSRF, BSMN, or equal.
   6. Manufacturer: Mason Industries, Inc. Type MFT, or equal.

B. Service: Steam, condensate, and compressed air.
   1. Connections: 2-1/2" and larger, flanged; 2" and smaller, screwed.
   2. Hose:
      a. 2-1/2" and larger: Seamless, corrugated flexible, stainless steel with braided cover.
      b. 2" and smaller: Seamless, corrugated bronze flexible bronze with braided cover.
   3. Manufacturer: Mason Industries, Inc. BSSRF, BSMN, or equal.

C. Service: Refrigerant.
   1. Hose: Seamless, corrugated, flexible bronze with braided cover.
   2. Connections: Sweat end.
   3. Manufacturer: Mason Industries, Inc. BBF, or equal.

PART 3 EXECUTION

3.01 INSTALLATION

A. Install vibration isolators for motor driven equipment 1 horsepower or larger.

B. Provide spring isolators on pipe hangers for first 4 points of support from isolated equipment for pipe 1" in diameter or larger with Type 5 Hangers.

C. Coordinate selection of isolation device with equipment and isolator manufacturer.

D. Provide flexible pipe connectors at suction and discharge of pump. Pipe connections shall be 12" long for pipes less than 6" in diameter; 18" for pipes 6" or larger in diameter.

END OF SECTION

SECTION 20 07 00 – MECHANICAL INSULATION

PART 1 GENERAL

1.01 SECTION INCLUDES

A. Insulating and jacketing, including, but not limited to:
   1. Air ducts not supplied with factory- or shop-applied liner.
   2. Piping systems.
   3. Equipment insulation not otherwise insulated by equipment manufacturer.

1.02 ACTION SUBMITTALS

A. Product Data:
   1. Schedule for insulating materials, including adhesives, fastening methods, fitting materials, etc. and intended use.
   2. Catalog sheets indicating conformance to ASTM Standards, density, thermal characteristics, jacket, surface burning characteristics, water vapor permeability.
   3. Submit manufacturers published literature indicating proper installation procedures.
   4. MSDS and additional safety procedures required for installation.
   5. Provide warranty information on materials
   6. Provide VOC content information for all adhesive and sealants to be applied inside building.

1.03 QUALITY ASSURANCE

A. Regulatory requirements:
   1. Insulation shall meet requirements of ASHRAE 90.1.
   2. Products shall conform to NFPA 90A and 90B with special regard to fire hazard classification requirements of NFPA 255, including vapor barriers and adhesives.
   3. Products shall possess flame spread rating of not over 25 without evidence of continued progressive combustion and a smoke developed rating no higher than 50 except as allowed by International Mechanical Code.
   4. Insulation materials used in contact with austenitic stainless steel shall meet requirements of ASTM C795.
   5. Materials shall be asbestos-free, fire-retardant, moisture-resistant, mildew-resistant and vermin proof.
   6. Adhesives, sealants, mastics and other coatings: Compatible to mechanical surfaces, insulations, and jackets to which applied in both wet and dry state. Suitable for temperature of systems to which applied.

1.04 DELIVERY, STORAGE, AND HANDLING

A. Deliver material to job site in original unbroken factory packaging, labeled with manufacturer's density and thickness.

B. Store insulation materials in clean dry indoor or covered location without direct contact with ground. Do not open packaging until ready to install insulation and close packaging when packaging is not empty. Handle insulation materials so as not to damage and dispose of packaging in accordance with site requirements. Insulation removed from packaging shall not be left uninstalled and exposed to elements.

C. Protect insulation during storage and in erected state from damage. Remove and replace all damaged insulation and jacketing.

1.05 PROJECT CONDITIONS

A. Environmental requirements: Perform Work at ambient and equipment temperatures as recommended by adhesive manufacturer.

PART 2 PRODUCTS

2.01 PIPE INSULATION SYSTEMS

A. Mineral fiber:
   1. Insulation:
      a. Type: ASTM C547, Type I.
      b. Temperature rating: -20 to 850°F (-29ºC to 454ºC).
      c. Density: 3 to 6 lb/cu ft.
      d. Conductivity: Not more than 0.24 Btu-in/hr-sq ft-ºF at mean temperature of 75ºF (24ºC).
   2. All-service vapor retarder jacket (ASJ) with self-sealing lap:
      a. Factory applied to insulation.
      b. Finish: White vinyl or white Kraft suitable for painting.
      c. Bench puncture resistance: 50 units minimum, test method ASTM D781.
      d. Permeance: 0.02 perms, maximum, test method ASTM E96, Proc. A.
      e. Jacket temperature rating: -20 to 150°F (-29ºC to 65.5ºC).
   3. Accessories: Adhesives, sealants, mastics and other coatings compatible with insulation system as recommended by insulation manufacturer.

B. Elastomeric:
   1. Insulation:
      a. Type: ASTM C534, Type I, Grade 1.
      b. Size: Up to 1" (25 mm) thick.
      c. Temperature rating: -40 to 180°F (-40ºC to 82ºC).
      d. Flame spread rating: No more than 25 tested by ASTM E84.
      e. Smoke developed rating: No more than 50 tested by ASTM E84.
      f. Conductivity: Not more than 0.28 Btu-in/hr-sq ft-ºF at mean temperature of 75ºF (24ºC).
      g. Permeance: Not more than 0.10 perms per inch, test method ASTM E96, Proc. A.
      h. Water absorption by volume: Not more than 0.20%.
   2. Accessories: Adhesives and sealants compatible with insulation system as recommended by insulation manufacturer.

C. Cellular glass:
   1. Insulation:
      a. Type: ASTM C552, Type II.
      b. Temperature rating: -400ºF to 800°F (205ºC to 427ºC).
      c. Density: 6.1 to 8.6 lb/cu ft.
      d. Conductivity: ASTM C552.
      e. Permeance: 0.00 perms, maximum, test method ASTM E96, Proc. A.
   2. Accessories: Adhesives, sealants, mastics or coatings as recommended by insulation manufacturer.

2.02 DUCT AND EQUIPMENT INSULATION SYSTEMS

A. Mineral fiber board:
   1. Insulation:
      a. Type: ASTM C612.
      b. Density: 3.0 lb/cu ft.
      c. Temperature rating: 0ºF to 450°F (-17ºC to 232ºC).
      d. Conductivity: Not more than 0.24 Btu-in/hr-sq ft-ºF at mean temperature of 75ºF (24ºC).
   2. All-service vapor retarder jacket (ASJ):
      a. Factory applied to insulation.
      b. Finish: White vinyl or white Kraft suitable for painting.
      c. Bench puncture resistance: 50 units minimum, test method ASTM D781.
      d. Permeance: 0.02 perms, maximum, test method ASTM E96, Proc. A.
      e. Jacket temperature rating: -20ºF to 150ºF (-29ºC to 65.5ºC).
      f. Joints and seams: 6" (150 mm) wide glass cloth, 2 coats mastic.
   3. Reinforced aluminum foil jacket (FRK):
      a. Factory applied to insulation.
      b. Finish: foil.
      c. Bench puncture resistance: 25 units minimum, test method ASTM D781.
      d. Permeance: 0.02 perms, maximum, test method ASTM E96, Proc. A.
      e. Jacket temperature rating: -20 to 150°F (-29ºC to 65.5ºC).
      f. Joints and Seams: 3” (75 mm) wide tape.
   4. Accessories: Adhesives and sealants compatible with insulation system as recommended by insulation manufacturer.

B. Mineral fiber blanket:
   1. Insulation:
      a. Type: ASTM C553, Type III.
      b. Density: 1.5 lb/cu ft.
      c. Temperature rating: 0ºF to 450°F (-17ºC to 232ºC).
      d. Conductivity: Not more than 0.24 Btu-in/hr-sq ft-ºF at mean temperature of 75ºF (24ºC).
   2. All-service vapor retarder jacket (ASJ):
      a. Factory applied to insulation.
      b. Finish: White vinyl or white Kraft suitable for painting.
      c. Bench puncture resistance: 50 units minimum, test method ASTM D781.
      d. Permeance: 0.02 perms, maximum, test method ASTM E96 Proc. A.
      e. Jacket temperature rating: -20 to 150°F (-29ºC to 65.5ºC).
      f. Joints and seams: 3” (75 mm) wide tape.
   3. Reinforced aluminum foil jacket (FRK):
      a. Factory applied to insulation.
      b. Finish: foil.
      c. Bench puncture resistance: 25 units minimum, test method ASTM D781.
      d. Permeance: 0.02 perms, maximum, test method ASTM E96, Proc. A.
      e. Jacket temperature rating: -20 to 150°F (-29ºC to 65.5ºC).
      f. Joints and seams: 3” (75 mm) wide tape.
   4. Accessories: Adhesives and sealants compatible with insulation system as recommended by insulation manufacturer.

C. Elastomeric sheet:

1. Insulation:
   a. Type: ASTM C534, Type II, Grade 1.
   b. Size: up to 2” (50 mm) thick.
   c. Temperature rating: -40 to 180°F (-40ºC to 82ºC).
   d. Flame spread rating: No more than 25 tested by ASTM E84.
   e. Smoke developed rating: No more than 50 tested by ASTM E84.
   f. Conductivity: Not more than 0.3 Btu-in/hr-sq ft-ºF at mean temperature of 75ºF.
   g. Permeance: Not more than 0.10 perms, test method ASTM E96 Proc. A.
   h. Water absorption by volume: Not more than 0.20%.
2. Accessories: Adhesives and sealants compatible with insulation system as recommended by insulation manufacturer.

2.03 FIELD APPLIED JACKETS

A. PVC jacket:
   1. Material: ASTM D1784, Cell Class 16354.
   2. Minimum thickness: 0.030” (0.76 mm).
   3. Color: White
   4. Use preformed fittings for sizes available from manufacturer. Other fittings may be mitered.
   5. Use pre-curled jackets for available sizes.
   6. Ultraviolet rating: Rated for outdoor use in high-UV applications and indoor applications.
   7. Solvent weld adhesives: As recommended by PVC jacket manufacturer.
   8. Tape: 5 mils minimum. As recommended by PVC jacket manufacturer.
   9. Tacks: Stainless steel.

B. Glass fiber jacket:
   1. Material: 20 x 20 mesh glass fabric.
   2. Embed in coat of lagging adhesive, finish with second coat of lagging adhesive.

C. Aluminum jacket:
   1. Material: ASTM C1729, Type I, 0.016" (0.4 mm) thick, smooth finish, Type 3105 or 3003 aluminum.
   2. Jacket cut to size with 2" (50 mm) overlap. Banded 12" (300 mm) oc; seam calked with aluminum color silicon sealant.
   3. Banding with insulation less than 13” (330 mm) diameter: Type 304 stainless steel, 1/2" x 0.020" (13 mm x 0.5 mm).
   4. Banding with insulation larger than 13” (330 mm) diameter, but less than 6’-0” (1.8 m) diameter: Type 304 stainless steel, 3/4" x 0.020" (19 mm x 0.5 mm)

PART 3 EXECUTION

3.01 PREPARATION

A. Do not install covering before piping and equipment has been tested.

B. Verify surface is clean and dry prior to installation. Verify insulation is dry before and during application. Finish with systems at operating conditions.

3.02 INSTALLATION - GENERAL

A. Verify insulation is continuous through walls. Pack around pipes and fireproof self-supporting insulation material, fully seal.

B. Insulate fittings, in-line specialties, and valves. Do not insulate unions, flanges necessary for maintenance of equipment, strainers, flexible connections, and expansion joints. Terminate insulation neatly with plastic material troweled on bevel.

C. Finish insulation neatly at hangers, supports, and other protrusions.

D. Locate insulation or cover seams in least visible locations.

E. Install insulating materials with necessary joints and terminations to permit easy access and removal of equipment sections where inspection or frequent service or repair is required, and to allow for expansion.

F. Insulate following systems for complete vapor barrier protection:
   1. Cold potable water piping.
   2. Refrigerant suction piping.
   3. Externally insulated ductwork.
   4. Chilled water piping, valves, and accessories.
   5. Chiller evaporator.
   6. Roof drain piping.

3.03 INSTALLATION - PIPING, VALVE, AND FITTING INSULATION

A. Install materials in accordance with manufacturer's instructions and as specified herein.

B. Apply insulation to piping with bonding adhesive, with butt joints and longitudinal seams closed tightly.

C. Laps on factory-applied jackets shall be 1-1/2" (38 mm) minimum width firmly cemented with lap adhesive, or be pressure sealing type lap.

D. Cover joints with factory furnished tape (2" [50 mm] minimum width) to match jacket, firmly cemented with lap adhesive.

E. Install factory-molded insulation for fittings as indicated for valve insulation.

F. For finishing of insulated pipe fittings, one piece PVC or aluminum fitting covers matching pipe jacket may be used.

G. Taper terminations of pipe insulation ends.

H. Where thermal pipe shields are used at hanger locations, extend insulation thermal shield. Where vapor barrier is required, Contractor shall be responsible for continuity of vapor barrier at thermal shield.

I. Where thermal pipe shields are not used at hangers for piping with vapor barrier, insulation shall be calcium silicate type to eliminate compression. Calcium silicate insulation shall extend for twice length of metal shield.

J. Insulation at anchors, secured directly to pipe surface, shall extend up anchor for distance of 4 times insulation thickness. Assure vapor seal at termination of vapor barrier.

K. Piping and fittings not to be insulated:
   1. Fire protection.
   2. Sanitary waste.
   3. Compressed air.
   4. Natural gas.
   5. Fuel oil.
   6. Vent.

3.04 EQUIPMENT INSULATION INSTALLATION

A. Provide insulation clips where necessary. Field welding shall be performed by certified welders. No welding shall be performed on lined tanks and vessels.

B. Leave code stamps uncovered. Provide nonferrous replica of nameplates, code stamps, etc., that will be covered by insulation. Field pack behind extended nameplates.

C. Reinforce insulation at corners and openings with metal beading.

D. Inspection ports, manholes, and access covers:
   1. Construct insulation to allow removal of covers without disturbing shell insulation.
   2. Access cover insulation shall be attached to sectional sheet metal covers, to allow removal for access to access cover retaining bolts, and replacement without damage.
   3. Insulate hinges or any other protrusions extending beyond insulation surface.

3.05 INSTALLATION - VENTILATION DUCTWORK AND EQUIPMENT

A. Apply duct insulation evenly over duct surface, secured with bonding adhesive applied in transverse strips, 12" (300 mm) oc. Insulation for ductwork over 24" (600 mm) wide and underside and sides of ducts with rigid insulation shall be additionally secured with weld pin or stick clip fasteners not over 18" (450 mm) oc. Where weld pin fasteners are used, they shall be installed without damage to interior galvanized surface. Neatly clip pins back to each fastener.

B. Where vapor barrier jackets are specified, pins shall be jacketed over with matching materials or grouted caps, and sealed vaportight.

C. Cut and miter insulation without factory jacket to suit surface. Voids, seams, and joints shall be built up with insulating cement, finished to smooth surface, and covered with glass fabric applied as specified.

D. For surfaces requiring vapor barrier jackets, apply 2 coats of vapor barrier mastic, after application of insulating cement. Embed layer of glass fiber reinforcing fabric between coats and finish with glass fabric applied as specified.

E. Ductwork not to be insulated:
   1. Ductwork internally lined. Refer to Section 23 31 00.
   2. Exhaust system ductwork.

3.06 PIPE INSULATION SCHEDULE

A. Provide insulation on piping, valves, and piping accessories where required. Minimum insulation thickness shall be in accordance with Mechanical Standard M-1008, unless noted below.

B. Provide field-applied jackets on all piping, valves, and piping accessories where exposed as noted below.

C. Piping insulation application schedule:

Service	Insulation	Field Applied Jacket	Thickness
Potable Hot Water Piping (140ºF)	Mineral Fiber Cellular Glass Polyisocyanurate Elastomeric	PVC	M-1008
Potable Cold Water Piping (45ºF)	Mineral Fiber Cellular Glass Polyisocyanurate Elastomeric	PVC	1/2” (13 mm)
Refrigerant Suction Piping (35°F)	Cellular Glass Polyisocyanurate Elastomeric	PVC	M-1008
AC Condensate (50°F) located interior to building	Cellular Glass Polyisocyanurate Elastomeric	PVC	1/2” (13 mm)

3.07 DUCT AND EQUIPMENT INSULATION SCHEDULE

Item	Insulation[1]	Jacket Type	Insulation Thickness
Outside Air and Mixed Air Ductwork Exposed	Mineral Fiber Board (ASJ)	---	1”
Outside Air and Mixed Air Ductwork Concealed	Mineral Fiber Board (FRK)	---	1"
Exposed Supply Ducts in Equipment Room	Mineral Fiber Board (ASJ)	---	1"
Concealed Supply Ducts	Mineral Fiber Blanket (FRK)	---	1-1/2"
Ducts exterior to building or outside conditioned space	Mineral Fiber board (ASJ)	Aluminum	3”
Return and Relief Ducts in Equipment Room	Mineral Fiber Board (ASJ)	---	1"

[1]Letters in parenthesis indicate factory applied jacket.

END OF SECTION

SECTION 21 13 00 – FIRE-SUPPRESSION SPRINKLER SYSTEMS

PART 1 GENERAL

1.01 SECTION INCLUDES

A. Design, furnish, install, test, and certify fire sprinkler system.

1.02 RELATED REQUIREMENTS

A. Section 20 05 13 - Common Work Results for Facility Systems Piping: Piping arrangement and sleeves.

B. Section 20 05 29 - Supports and Anchors for Facilities Services Piping and Equipment: Supplementary support steel.

1.03 SUBMITTAL PROCEDURES

A. Submittals will first be reviewed by Engineer and Owner.

B. Contractor shall make any corrections required by Engineer or Owner and resubmit.

C. Revised submittals will be submitted to Authority Having Jurisdiction (AHJ) for approval.

D. Contractor shall make any corrections required by AHJ and resubmit.

E. Review schedule will be dictated by promptness of AHJ review.

1.04 SUBMITTALS

A. Shop Drawings: Working plans signed by a Professional Engineer or a NICET Level III or above in fire protection technology, for automatic sprinkler system layout, special hazards suppression systems, or both.

B. Product Data: Sprinkler system components.

C. Delegated design submittals: Hydraulic calculations.

D. Test results: Completed test certificates.

1.05 QUALITY ASSURANCE

A. Sprinkler system components shall be UL-listed and FM-approved.

B. Components, materials, and treatment chemicals in potable water service shall comply with applicable requirements of state and local plumbing codes including, but not limited to, NSF 61 requirements.

PART 2 PRODUCTS

2.01 DESIGN REQUIREMENTS

A. Design sprinkler system including, but not limited to, piping, equipment, hangars, and bracing in accordance with NFPA standard 13 and State and local Code.

B. Design sprinkler system using NFPA Standard 13 Hydraulic Calculation Methods. Pipe Schedule Method not acceptable.

C. Design sprinkler systems for occupancy classification(s) indicated on Drawings. Water demand and area of operation for occupancies shall be as required by NFPA Standard 13 unless noted otherwise.

D. Select sprinkler types: As required for particular application.

E. Sprinkler spacing, location, and position: NFPA 13.

F. Hydraulic calculations shall include total combined inside and outside hose stream allowance. Hose stream allowance shall be added to system demand as required by NFPA 13.

G. Sprinkler system type: Wet pipe sprinkler system(s) unless noted otherwise.

H. System area protection limitations: Wet pipe sprinkler systems shall comply with system area protection area limitations required by NFPA 13.

I. Water supply:
   1. Preliminary water supply data is noted on Drawings.
   2. Final flow test data: Conduct water flow tests to determine available water supply. Verify flow data with AHJ prior to construction.

J. System components shall be rated for working pressure not less than maximum pressure to be developed at its corresponding location within system under any condition and when permanently installed fire pump is operating at shutoff pressure.

K. Thread connections with interface to local fire department shall match existing. Verify thread type with local fire department.

2.02 SPRINKLER SYSTEM COMPONENTS

A. Sprinklers:
   1. Type: Closed head for wet pipe systems.
      a. Wet pipe systems, all areas unless noted otherwise: Closed head.
         1) Standard or quick response.
         2) Upright, pendant, semi-recessed pendant, recessed pendant, or horizontal arrangement.
         3) Bulb or soldered link.
   2. Provide ordinary-temperature rated sprinklers unless noted otherwise. Provide intermediate- or high-temperature rated sprinklers as required by NFPA 13.
   3. Provide sprinkler guards where sprinkler is subject to damage.
   4. Provide upright-type sprinklers in open areas without suspended ceilings.
   5. Finish: Unfinished spaces: Natural brass.

B. Inspector's test station:
   1. Type: Ball valve with sight glass and test orifice.

2. Provide orifice size to match sprinkler system K-factors.

C. Sprinkler replacement kit:
1. Metal cabinet designed for this purpose and clearly marked as containing specified material.
2. Include each type of sprinkler head used on Project.
3. Wrench specifically designed for sprinkler head removal and installation.
4. Quantity of sprinkler heads as required by NFPA 13.

2.03 GENERAL COMPONENTS

A. Piping systems:
1. Above grade pipe and pipe fittings: NFPA 13.
a. Above-grade pipe material:
1) Welded or roll-grooved: ASTM A795 or ASTM A53.
a) Sizes 5" (125 mm) and smaller: Schedule 10.
b) Size 6" (150 mm): 0.134" (3.4 mm) minimum nominal wall thickness.
c) Sizes 8" to 10" (200 mm to 250 mm): 0.188" (4.8 mm) minimum nominal wall thickness.
d) Size 12" (300 mm): 0.330" (8.4 mm) minimum nominal wall thickness.
2) Threaded or cut-grooved: ASTM A795 or ASTM A53.
a) 6" (150 mm) and smaller: Schedule 40.
b) 8" (200 mm) and larger: Schedule 30.
b. Screwed fittings:
1) ANSI B16.4 cast iron with 175 psi (1206 kPa) cold water rating, or
2) ANSI B16.3 malleable iron rated 300 psi (2068 kPa).
c. Flanged fittings: ANSI B16.1, Class 125 or Class 250, cast iron, short body
d. Screwed joints: ANSI B2.1 tapered threads with pipe ends reamed and burrs removed.
e. Flanged joints:
1) ANSI B16.1, Class 125 or Class 250.
2) Full face with 1/16" (2 mm) gaskets.
3) ASTM A37B hexagon bolts and nuts.
f. Grooved joints:
1) Bolted clamp type flexible coupling for grooved end pipe and fittings.
2) Clamps: Ductile iron with preformed synthetic rubber gasket.
3) Bolts and nuts: ASTM A449 and A183.
4) Installation-Ready, for direct stab installation without field disassembly.
5) Rigid Type: Housings cast with offsetting, angle-pattern bolt pads to provide rigidity and system support and hanging in accordance with NFPA-13, fully installed at visual pad-to-pad offset contact. (Couplings that require exact gapping at specific torque ratings are not permitted.) Victaulic Style 009N and 107N, or approved equals.
6) Flexible Type: For use in locations where vibration attenuation and stress relief are required. Victaulic Style 177, or approved equal.

g. Unions:
1) 2" (50 mm) and smaller: Malleable iron, screwed, ground brass-to-iron seat.
2) 2 1/2" (64 mm) and larger: Flanges.
3) Unions or flanges for servicing and disconnect are not required in installations using grooved joint couplings.

h. Reducers: Use 1-piece fittings for reduction in pipe sizes. Bushings not permitted.
i. Provide dielectric package for isolating dissimilar metals at unions and flanges, including bolts at flanges. Dielectric waterway fittings shall be copper-silicon casting conforming to UNS C87850 with grooved and/or threaded ends. Victaulic Style 647, or approved equal.
j. Nonmetallic pipe: Not acceptable.
k. Corrosive conditions exist. Galvanized pipe is not acceptable. Provide black steel pipe with coating.

B. Hangers, bracing, and restraint of system piping:
1. Hangers, fasteners, spacing, and sway bracing: Comply with NFPA 13.
2. Seismic Bracing: Comply with NFPA 13.
3. Supplemental support steel: Refer to Section 20 05 29.
4. Provide restraints to prevent movement of pipe during operation.
5. Provide welded lug structural attachments. Beam clamps not acceptable.
6. Provide welded lug structural attachments or beam clamps with tie rods and lock nuts (MSS Type - 30). Dog-ear type beam clamps not acceptable.

C. Control valves:
1. Type: OS&Y gate.
a. AWWA C515 resilient seat valve.
b. Body: Epoxy coated ductile iron.
c. Coating: AWWA C550; NSF 61 certified. For all wetted parts where valve is located before system backflow preventer.
d. Gate: Ductile or cast iron, or bronze enclosed in rubber to provide resilient seat.
e. Ends: Flange or grooved.
f. Stem: Bronze with bronze trim,
g. Stem arrangement: Nonrising type with outside screw and yoke operator.
h. Provide valve with provision for mounting tamper switch.
i. Where flanged connection is provided, flange shall be ANSI B16.1 Class 125 or Class 250.
2. Type: Butterfly.
a. End Connection: Grooved end, wafer, or lug with resilient seat:
b. Body: Ductile iron or brass.
c. Disc: Coated Ductile iron or aluminum-bronze.
d. Coating: NSF 61 and NSF 372 Certified for all wetted parts where valve is located before system backflow preventer
e. Seat: Elastomer Rubber.
f. Stem: Stainless steel, offset from the disc centerline to provide complete 360-degree circumferential seating.
g. Provide gear operator with visual indicator of position
h. Victaulic Series 705 (fire protection services); Vic300 MasterSeal (PHA services); and Series 608N (potable water services), or approved equals.

D. Fire department connection:
1. Type: Building flush-mounted.
2. Construction: Cast brass body with clapper inlets, adapters, and brass plate for flush mounting to building. Back, bottom of top outlet at Contractor's option.
3. Finish: Polished chrome plated.
4. Hose caps and chains.

5. Provide minimum of two 2-1/2” (64 mm) connections or alternative inlet configuration acceptable AHJ. Number of inlets shall be determined based on requirements of NFPA 13 and system design flow rate.
6. Provide label in accordance with NFPA 13.
7. At the low point near each fire department connection, install a 90-degree elbow with drain connection to allow for localized system drainage to prevent freezing. Victaulic #10-DR, or approved equal.

E. Automatic and manual drains:
   1. As required to drain systems.
   2. Terminate piping at building floor drains.
   3. Provide separate valved connection upstream of each drain valve designated as test connection.

F. Fire check valve:
   1. Type: Flanged swing check.
      a. Body: Cast iron with bronze seat ring.
      b. Disc: Cast iron or bronze with resilient rubber seat. Trim brass or stainless steel.
      c. Provide tap for connection of ball drip valve.
      d. Where flanged connection is provided flange shall be ANSI B16.1 Class 125 or 250.
   2. Type: Grooved spring-assisted swing check.
      a. Body: Ductile iron with grooved ends
      b. Disc: Stainless steel or bronze with rubber seat.
      c. Provide tap for connection of ball drip valve.
      d. Victaulic Series 717, or approved equal.

G. Automatic ball drip valve:
   1. Body: Bronze body with steel pipe thread.
   2. Ball: Stainless steel or brass

H. Fire protection backflow preventer:
   1. Description: Double check valve type.
   2. Construction:
      a. Sizes 1/2" to 2" (13 mm to 50 mm):
      b. Sizes 2-1/2” to 10” (64 mm to 250 mm):
         1) Double check valve assembly: Consists of 2 independently acting check valves, 2 resilient seated outside OS&Y shutoff valves, and 4 test cocks. At Contractor’s option provide approved assembly with butterfly valves instead of OS&Y gate valves.
         2) Main body: No threads tapped directly into body, uni-body, and ductile iron-type construction with fused epoxy coating.
         3) Coating: AWWA C550; NSF 61 certified.
         4)
   3. No special tools shall be required for maintenance.
   4. Certified in compliance with NSF 61, ASSE 1015, AWWA C510, CSA B64.5, and Foundation for Cross Connection Control and Hydraulic Research at University of Southern California.
   5. Refer to Section 21 13 00.
   6. Wire alarms to addressable modules provided by Division 21.
   7. Wet pipe system vane-type water flow switches:
      a. Type: Paddle, with 2 SPDT contacts and adjustable time delay operation.

b. Enclosure: NEMA 4 die-cast aluminum with red finish.
c. Pipe size: As required by fire protection design and indicated on drawings.

8. Wet pipe system pressure-type water flow switches:
   a. Type: Pressure with 2 SPDT contacts and adjustable time delay operation.
   b. Pipe connection: 1/2" (13 mm) male NPT.
   c. Enclosure: NEMA 4 die-cast aluminum with red finish.
9. Pressure switch:
   a. Type: pressure switch with 2 SPDT contacts
   b. Pipe connection: 1/2" (13 mm) male NPT.
   c. Enclosure: NEMA 4 die-cast aluminum with red finish.
10. Tamper switches:
    a. Provide supervisory switch for valves for supervision against closure or tampering with valves.
    b. Materials: Acid-treated cast aluminum housing, nickel-plated parts. Trip rod shall be adjustable length.
    c. Provide visual switch indicators.
    d. Provide 2 SPDT contacts.
    e. Enclosure: NEMA 4X.
11. Alarm bell:
    a. Location: Exterior of building.
    b. Provide weatherproof back box.
    c. Wire alarm bell to fire alarm control panel (FACP) provided by Division 21.
    d. Finish: Red powder coating
    e. Voltage: 24 volts dc from FACP.

2.04 IDENTIFICATION TAGS AND LABELS

A. Provide identification tags, system labels, and information labels as required by NFPA 13.

B. Control, drain, test, and alarm valves or devices, and other accessories shall have identification tag stating function, operation, normal position, and other pertinent information clearly inscribed.

C. Material: Metal or phenolic plastic. Permanently attach by banding straps or screws, in conspicuous place on each piece of equipment.

D. Provide hydraulic design information sign.

E. Provide general information sign for each system control riser, antifreeze loop, and auxiliary system control valve.

PART 3 EXECUTION

3.01 EXAMINATION

A. Site verification of conditions: Contractor shall acquaint itself with prevailing site conditions as they affect performance of Work. No claims for extra compensation based on lack of knowledge will be considered.

3.02 INSTALLATION

A. Install system in accordance with NFPA 13 and IBC.

B. Install local alarm gong located outdoors on building wall, in immediate vicinity of fire department connection.

C. Install piping and sprinkler heads to avoid conflict with other pipes, lights, electrical conduit, or equipment supplied by others.

D. Where pipes pass through walls or floors, hole shall conform to NFPA 13 requirements. For masonry wall provide pipe sleeve and sleeve seals. For finished walls provide escutcheon plate. Seal fire rated walls in accordance with requirements of Section 07 84 00.

E. Install sprinklers in ceiling pockets as required by NFPA 13.

F. Install sprinklers under fixed obstructions such as ducts, decks, open grate flooring, cutting tables, and overhead doors as required by NFPA 13.

G. Position sprinklers to avoid obstructions to discharge as required by NFPA 13.

H. Install sprinkler replacement kit on wall adjacent to main control valve.

I. Provide water flow switch in each zone.

J. Coordinate fire department connection types with local fire department.

3.03 BACKFLOW PREVENTION ASSEMBLY

A. Comply with all regulatory codes for installation of backflow prevention assemblies.

B. Flush piping leading to each backflow prevention assembly prior to installation oto ensure all foreign material is removed from piping.

C. Lift assembly by connecting lifting hooks to the lift rings cast into valve body. Do not lift the assembly by connecting to the gate valve hand wheels or valve stems.

D. Slowly fill the assembly after installation with water and bleed air from the assembly body using test cocks.

E. Test the valve assembly to ensure proper operation.

3.04 FIELD QUALITY CONTROL

A. Test system in accordance with NFPA 13 including:
   1. Hydrostatic tests.
   2. System operational tests:
      a. Waterflow devices.
      b. Main drain valves.
      c. Control valves.
   3. Backflow prevention assemblies.

B. Subject system to tests in presence of Owner's insurance carrier and AHJ. Notify Owner at least 7 days in advance of testing.

C. Provide necessary instruments and equipment; pay expenses incurred in making tests; and obtain approvals and certificates.

D. Where evidence of stoppage appears in piping or equipment, disconnect, clean, repair, and reconnect obstructed parts; also bear cost of cutting and patching adjoining work necessitated by such cleaning and repairing.

3.05 PROTECTION OF PIPING IN SEISMIC ZONES

A. Protection of piping against earthquake damage is required regardless of location in which system is being installed. Provide seismic protection for fire suppression piping.

B. Methods and design shall be in accordance with NFPA 13 including Appendix A.

C. Refer to drawings and specifications for short-period spectral response acceleration coefficient (Ss) in accordance with ASCE 7.

3.06 INSPECTION

A. Sprinkler system will be inspected by AHJ and Owner's insurance carrier.

B. Provide Owner, Owner's insurance carrier, and AHJ with copies of completed test certificates.

END OF SECTION

SECTION 22 11 16 - DOMESTIC WATER PIPING

PART 1 - GENERAL

1.1 BASIS

A. This Specification includes water piping inside the building for water service to hand sinks, water heater, safety showers, or other equipment that requires potable water service inside the water treatment plant, excluding equipment and piping in the water treatment process.

1.2 SECTION REQUIREMENTS

A. Submittals: Product Data adequate to demonstrate compliance with any and all specifications outlined in this document and referenced specifications.

PART 2 - PRODUCTS

2.1 PERFORMANCE REQUIREMENTS

A. Potable water piping and components shall comply with NSF 14 and NSF 61. Plastic piping components shall be marked with "NSF-pw."

B. Process piping may be stainless steel (304 minimum), ductile iron, or Schedule 80 PVC. See building mechanical drawings and specifications for plumbing work.

C. All new work must be compliant with local plumbing code and/or IBC latest edition.

2.2 PIPE AND FITTINGS

A. PVC Piping: ASTM D 1785, Schedule 80 pipe using ASTM D 2467, solvent weld type fittings.

1. Connections: 150 Class flanged connections, Van Stone style for connections to valve, flow meters, pumps; solvent weld elsewhere. Comply with manufacturer’s recommendations for glue (IPS PVC 711) and primer (IPS P-70).
2. Flanges: class 125, true 90° with the pipe axis, hex head stainless steel bolts and nuts.

B. Pipe Supports:

1. Supports and restraints shall be designed and provided to prevent excessive movement and separation during operation.

2. Sized with a capacity safety factor of 5:1.

3. Maximum pipe deflection under full load to be 1/8-inch.

4. Follow manufacturer’s recommendations on support spacing.

5. Determine and provide all required mounting equipment and supports.

6. Manufacturer: ITT Grinnell or equal.

C. Pipe Sleeves:

1. Use “Link Seal” LS-200 (or equal) EPDM black rubber seals with 316SS hardware for all pipe to wall or pipe to floor penetrations to provide a seal between concrete and pipe where water tight seals are required.

2. No pipe sleeves are required for wall penetrations through stud framed walls. Seal these wall penetrations with expanding foam sealant as required for insulation and to protect wall materials from water ingress.

PART 3 - EXECUTION

3.1 INSTALLATION

Piping Installation:

A. Contractor shall install all piping, valves, hangers, supports, fittings, and appurtenances required for a fully functional piping system.

B. Provide a minimum of one (1) sample tap, and pressure gauge upstream of any chemical injection point.

C. Provide a minimum of one (1) sample tap, and pressure gauge downstream of any chemical injection point.

D. Install wall penetration system at each service pipe penetration through foundation wall. Make installation watertight.

3.2 INSPECTING AND CLEANING

A. Inspect and test piping systems as follows:

1. Fill domestic water piping. Check components to determine that they are not air bound and that piping is full of water.

2. All systems shall be subjected to operating conditions. Based upon visual observations, any leaks, vibrations, deflections, or stress in the piping system shall be corrected to the satisfaction of the Owner’s Representative.

B. Contractor shall test the bacteriological quality of the installed equipment after the pressure test. Disinfection shall comply with AWWA C653-13 (or latest edition).

END OF SECTION

SECTION 22 30 00 – PLUMBING EQUIPMENT

PART 1 GENERAL

1.01 SECTION INCLUDES

A. Cleanouts and cleanout access covers.

B. Water hammer arresters.

C. Thermostatic mixing valves.

D. Drains.

E. Wall hydrants.

F. Hose bibbs.

G. Backflow preventers.

1.02 INFORMATIONAL SUBMITTALS

A. Product Data:
   1. Include appropriate identification, model number, dimensions, materials of construction, connection locations and sizes, options, and wiring diagrams.
   2. Manufacturer's installation instructions and maintenance manuals.

B. Quality assurance data: Backflow preventer test reports.

1.03 QUALITY ASSURANCE

A. Comply with applicable requirements of state and local plumbing codes, and any other governmental agency under whose jurisdiction Work is being performed.

B. Pressure vessels shall carry ASME stamp where required by Code.

C. Natural gas and electric controls shall be UL-approved.

D. Exposed piping and fittings in finished areas: Chromium-plated brass with polished finish.

E. Throughout Project, use products of same manufacturer to greatest extent possible.

F. Throughout project, use products of same manufacturer to greatest extent possible.

1.04 DELIVERY STORAGE AND HANDLING

A. During delivery and storage, handle equipment to prevent damage, denting, or scoring.

B. Store equipment and components in clean dry place. Protect from weather, dirt, water, construction debris, and physical damage in accordance with the manufacturer’s instructions.

PART 2 PRODUCTS

2.01 DESIGN REQUIREMENTS

A. Coordinate drain outlets with joint types allowed by each pipe class specification. In general compression type outlets are acceptable for below grade outlets and no-hub type outlets are acceptable for above grade outlets.

B. Drains shall have bottom outlet unless noted otherwise.

2.02 CLEANOUTS AND CLEANOUT ACCESS COVERS

A. Designation on Drawings: CO-1.
   1. Description: Floor-mounted cleanout.
   2. Access cover:
      a. Unfinished areas: Round with nickel-bronze scored frames and plates.
      b. Finished areas: Round with depressed center section to accommodate floor finish. Provide cleanout markers in carpeted areas.
   3. Manufacturer: Wade 6000, or equal by Josam or Jay R. Smith.

B. Designation on Drawings: CO-2.
   1. Description: Wall-mounted cleanout.
   2. Access cover: Wade Series 8300-164, or equal.
   3. Manufacturer: Wade 8550, or equal by Josam or Jay R. Smith.

C. Designation on Drawings: YCO-1.
   1. Description: Heavy-duty scoriated yard cleanout with secured cover, internal brass recessed plug, and spigot connection.
   2. Manufacturer: Wade 6000-12, or equal by Josam or Jay R. Smith.

2.03 WATER HAMMER ARRESTERS

A. Description: Stainless steel bellows-type water hammer arresters installed on water lines connected to solenoid valves, flush valves, and fixture or group fixtures complete with an accessible isolation valve.

B. Size: In accordance with PDI WH-201 and requirements of plumbing code.

C. Manufacturer: Josam Series 75000, or equal by Tyler Pipe or Jay R. Smith.

2.04 FLOOR DRAINS

A. Designation on Drawings: FD-1.
   1. Description: Coated cast iron floor drain with weepholes, and adjustable collar with rolled thread.
   2. Grate: Heavy-duty ductile or cast iron, deep set tractor grate.
   3. Size: As shown on Drawings.
   4. Manufacturer: Josam 32100-AE-TG, or equal by Wade or Jay R. Smith.

B. Designation on Drawings: FS-1.
   1. Description Coated cast iron deep sump floor drain with seepage holes and sediment bucket.
   2. Grate: Heavy Duty Ductile iron half (1/2) grate.
   3. Size: As shown on Drawings.
   4. Manufacturer: Josam 49340A, or equal by Wade or Jay R. Smith.

2.05 BACKFLOW PREVENTERS

A. Designation on Drawings: BFP-1.
   1. Description: Reduced pressure type.
   2. Size: As shown on Drawings.

3. 3/4” through 2” (19 mm through 50 mm):
    a. Construction:
        1) Reduced pressure assembly: Consists of differential pressure relief valve located between 2 independently acting “Y” pattern check valves, 2 full ported ball valve shut-offs, and 4 test cocks.
        2) Mainline valve body and caps, including relief valve body and cover: Bronze with stainless steel internals.
        3) Check valves: Center stem guided.
        4) Seat discs: Reversible.
        5) Relief valve: Provide with removable seat ring.
    b. Assembly: Certified in compliance with ASSE 1013, AWWA C511-89, CAN/CSA B64.4, and approved by Foundation for Cross Connection Control and Hydraulic Research at the University of Southern California.
    c. Manufacturer: Conbraco Series 40-200, Febco Model 825Y, Watts Model 009, or equal by Wilkins or Park.

B. Designation on Drawings: BFP-2.
1. Description: Double check valve type.
2. Size: As shown on Drawings.
3. 1/2” through 2” (13 mm through 50 mm):
    a. Construction:
        1) Double check valve assembly: Consists of 2 independently acting check valves, 2 ball-type shutoff valves, and 4 test cocks.
        2) Main body: Cast bronze.
    b. No special tools shall be required for maintenance.
    c. Certified in compliance with ASSE 1015, AWWA C510, CSA, UL, FM and foundation for cross connection control and hydraulic research at the University of Southern California.
    d. Manufacturer: Watts Model 007, or equal by Conbraco or Febco.
4. 2-1/2” through 10” (64 mm through 250 mm):
    a. Construction:
        1) Double check valve assembly: Consists of 2 independently acting check valves, 2 resilient seated outside stem and yoke (OS&Y) shutoff valves, and 4 test cocks.
        2) Main body: No threads tapped directly into body, uni-body, and ductile iron-type construction with fused epoxy coating.
    b. No special tools shall be required for maintenance.
    c. Certified in compliance with ASSE 1015, AWWA C510, CSA B64.5, UL, FM, and Foundation for Cross Connection Control and Hydraulic Research at the University of Southern California.
    d. Manufacturer: Conbraco Model DC, Febco Model 850 OS&Y, Watts Model 709, or equal.

C. Designation on Drawings: BWV-1
1. Description: Vertical backwater valve.
2. Size: As shown on drawings.
3. Construction: Brass components, elastomer compression seal and elastomer float.
4. Manufacturer: Wade, or equal.

2.06 WATER METERS

A. Designation on Drawings: WM-1.

B. Description: Nutating disc.

C. Size: 1-1/2”.

D. Ends: Flanged or Screwed.

E. Accurate reading flows from 2-100 gpm at 75 psi.

F. Coordinate selection with AHJ.

G. Manufacturer: Neptune, Badger, McCrometer, or equal.

PART 3 EXECUTION

3.01 INSTALLATION

A. Bury outside water and drainage pipe minimum of 4’-0”, unless shown otherwise on Drawings.

B. Install vacuum breakers on plumbing lines where contamination of domestic water may occur and on hose bibbs and flush valves.

C. Slope drainage lines 1/4” (6 mm) per foot for pipes less than 4” (100 mm) in diameter and 1/8” (3 mm) per foot for pipes 4” (100 mm) in diameter and larger, unless shown otherwise on Drawings.

D. Terminate vent piping not greater than 1’ (300 mm) or less than 6” (150 mm) above roof. Protect from frost closure by increasing size or other means as required by code.

E. Install Owner-furnished water meter as shown on Drawings and in accordance with local water utility.

F. Install acid waste neutralization tanks, grease and oil interceptors in accordance with manufacturer’s instructions.

G. Install drains in floors and roofs. Minimum of 1/2” (13 mm) below finished level.

3.02 CLEANOUTS AND CLEANOUT ACCESS COVERS

A. Lubricate cleanout plugs with mixture of graphite and linseed oil. Prior to building turnover, remove cleanout plugs, relubricate, and reinstall using only enough force to ensure permanent leakproof joint.

B. Provide extension to finished floor. Ensure ample clearance at cleanout for rodding of drainage system.

C. Provide cleanouts at each change in direction and at intervals required by applicable state and local codes.

3.03 BACKFLOW PREVENTER

A. Install reduced pressure backflow preventers and double check backflow preventers where indicated on Drawings.

B. Install with “Y” strainers.

C. Where Type BFP-1 is used, provide with air gap. Extend drain piping from air gap connections to nearest floor drains or as shown on Drawings.

D. Test and tag by person certified by local or state authority.

3.04 SERVICE CONNECTIONS

A. Provide new water service as indicated on Drawings.

B. Coordinate water service with local utility.

3.05 WATER PIPING TESTS AND INSPECTION

A. Test in accordance with Uniform Plumbing Code.

B. Piping shall be subjected to full working pressure of water main or to air pressure test of not less than 50 psig for not less than 15 minutes.

3.06 DISINFECTION

A. Disinfect potable water piping and equipment containing potable water in accordance with provisions of Uniform Plumbing Code and local water utility company requirements.

B. Inject solution of calcium hypochlorite and water at slow rate to provide minimum residual chlorine content of 50 ppm. System shall stand full of solution for not less than 24 hours.

C. Minimum chlorine residual at end of disinfection period shall be 10 ppm.

D. Operate valves to ensure full disinfection.

E. Repeat disinfection procedure if required.

F. Thoroughly flush lines after disinfection until extremities indicate same chlorine residual as supply water.

3.07 WATER HAMMER ARRESTERS

A. Provide water hammer arresters in accordance with PDI standard WH-201.

END OF SECTION

SECTION 22 33 00 – DOMESTIC WATER HEATERS

PART 1 GENERAL

1.01 SECTION INCLUDES

A. Electric water heaters.

1.02 INFORMATIONAL SUBMITTALS

A. Product Data:
   1. Include appropriate identification, model number, dimensions, materials of construction, connection locations and sizes, options, and wiring diagrams.
   2. Manufacturer's installation instructions and maintenance manuals.

1.03 QUALITY ASSURANCE

A. Comply with applicable requirements of state and local plumbing codes, and any other governmental agency under whose jurisdiction Work is being performed.

B. Pressure vessels shall carry ASME stamp where required by Code.

C. Throughout project, use products of same manufacturer to greatest extent possible.

1.04 DELIVERY STORAGE AND HANDLING

A. During delivery and storage, handle equipment to prevent damage, denting, or scoring.

B. Store equipment and components in clean dry place. Protect from weather, dirt, water, construction debris, and physical damage in accordance with manufacturer’s instructions.

PART 2 PRODUCTS

2.01 ELECTRIC DOMESTIC WATER HEATERS

A. Electric tank:
   1. Description: Vertical, electric water heater with standard legs
   2. Tank: Glass-lined steel with foam insulation and steel jacket with baked enamel finish.
   3. Water heater shall meet requirements of ASHRAE 90.1
   4. Elements: Medium-density, zinc-plated copper sheath type. For multiple element heaters, total capacity shall be evenly divided among elements.
   5. Provide water heater with integral controls to maintain water heater at set point.
   6. Provide shutoff valve and dielectric union on cold water inlet and hot water outlet of heater.
   7. Accessories:
      a. Hose bibb connection.
      b. ASME-rated temperature and pressure relief valve.
      c. ASME-rated vacuum breaker.
      d. Anode rods for corrosion protection.
      e. Heat trap fitting.
      f. Heavy-duty angle iron wall-mounted shelf with drain pan

PART 3 EXECUTION

3.01 INSTALLATION

A. Install water heaters and tanks in accordance with manufacturer's recommendations and local plumbing codes.

B. Route relief valve discharge to floor drain. Provide air gap as required by code.

3.02 WATER PIPING TESTS AND INSPECTION

A. Test in accordance with Uniform Plumbing Code.

B. Piping shall be subjected to full working pressure of water main or to an air pressure test of not less than 50 psig for not less than 15 minutes.

END OF SECTION

SECTION 22 40 00 – PLUMBING FIXTURES

PART 1 GENERAL

1.01 SECTION INCLUDES

A. Lavatories, sinks and associated faucets and aerators.
B. Emergency eyewash and showers.
C. Accessories.

1.02 INFORMATIONAL SUBMITTALS

A. Product Data:
   1. Include appropriate identification, model number, dimensions, materials of construction, flow, connection locations and sizes, options, and wiring diagrams.
   2. Manufacturer's installation instructions.

1.03 CLOSEOUT SUBMITTALS

A. Maintenance manuals.

1.04 QUALITY ASSURANCE

A. Regulatory requirements:
   1. Work shall comply with applicable state and local plumbing codes including but not limited to NSF 61 requirements for Faucets and fixtures fittings that supply drinking water for human ingestion.
   2. Plumbing fittings shall include necessary devices to conserve water in accordance with requirements of International Energy Conservation Code
   3. Water flow and consumption rates for plumbing fixtures: Comply with requirements in Public Law 102-486, Energy Policy Act.

B. Fixtures, trim, and accessories shall be product of one manufacturer to greatest extent practicable.

C. Refer to Section 01 25 13 for product delivery, storage, handling, and procedures for substitution of manufacturers not named.

1.05 DELIVERY, STORAGE, AND HANDLING

A. During delivery and storage, handle equipment to prevent damage, denting or scoring.

B. Store equipment and components in clean, dry place. Protect from weather, dirt, water, construction debris, and physical damage in accordance with manufacturer's instructions.

PART 2 PRODUCTS

2.01 DESIGN REQUIREMENTS

A. Fixtures shall be new, free from flaws and blemishes with finished surfaces clear, smooth, and bright.

B. Provide matching plumbing fittings. Visible parts of fixture brass and accessories shall be heavily chrome-plated.
C. Provide suitable carriers as necessary.
D. Provide wall stops at plumbing fixtures.

2.02 SERVICE SINKS

A. Designation on Drawings: MS-1.
B. Description: Floor-mounted precast terrazzo basin. 12” (300 mm) high back, 2” (50 mm) minimum shoulder, polished chrome strainer, integral P-trap and adjustable floor flange and stainless steel caps on all curbs.
C. Size: 24” x 24” (600 mm x 600 mm).
D. Connection size: 3” (75 mm).
E. Accessories:
    1. Stainless steel basin cap on 4 sides.
    2. 18” (450 mm) high stainless steel wall plates on all adjacent walls.
    3. Faucet: FAC-SS-M.S.
    4. Hose and hose bracket: Fiat 832-AA with 48" (1.2 m) long hose, or equal by Elkay.
    5. Mop hanger: Fiat 889-CC, or equal by Elkay.
    6. Manufacturer: Fiat Products TSB700, or equal by Florestone or Stern Williams

2.03 LAVATORY AND SINK FAUCETS (FAC)

A. Designation: FAC-SS-M.S.
    1. Type: Service sink with 3/4” (19 mm) threaded spout, pail hook, wall brace, and vacuum breaker.
    2. Handles: Lever-type.
    3. Finish: Polished chrome.
    4. Mounting: Wall; 8” (200 mm) centers.
    5. Accessories:
        a. Mixing valve: Point of use, bronze body, locked temperature adjustment cap, copper encapsulated thermostat assembly with polymer thermostatic shuttle, integral check valves on cold and hot inlets, Leonard Series 170 or equal.
        b. Manufacturer: Chicago Faucets Model 540-LD897Sor equal by Kohler or American Standard.

2.04 EMERGENCY EYE WASH AND SHOWER

A. Designation on Drawings: EEWS-1A.
    1. Description: ADA Compliant Free-standing combination eyewash and shower.
    2. Shower:
        a. Shower head: 10” (250 mm) diameter, stainless steel.
        b. 1” (25 mm) ball valve (stay-open type).
        c. Connection size: 1-1/4” (30 mm).
        d. Rod operator: Minimum of 38” (950 mm) and maximum of 48” (1200 mm) above floor as required to comply with ADA, stainless steel with large operating handle (pull-to-open and push-to-close).
    3. Eyewash:
        a. Bowl: 10” (250 mm) diameter stainless steel.
        b. Yoke: Chrome-plated brass with twin-aerated eyewash heads.
        c. 1/2” (13 mm) ball valve (stay-open type) with chrome-plated flag handle operator.

d. Integral flow control.
e. 1-1/4” (30 mm) waste with dome strainer, chrome-plated brass.

4. Piping and fittings: Stainless steel.
5. Mounting: Floor; free-standing with shower 7’-0” (2 m) above finished floor.
6. Thermostatic mixing valve:
   a. Description: Suitable for use with emergency fixtures.
   b. Adjustable set point within range of 65°F to 95°F (18°C to 35°C).
   c. Built-in cold water bypass to ensure cold water flow.
   d. Positive shut-off of hot water supply with loss of cold water supply.
   e. Dial thermometer mounted to unit.
   f. Mounting: Universal.
   g. Manufacturer: Bradley Corporation S19-2150, or equal by Haws or Encon.
7. Manufacturer: Bradley Company S19314BF, or equal by Haws or Encon.

PART 3 EXECUTION

3.01 EXAMINATION

A. Site verification of conditions: Check millwork Shop Drawings. Coordinate location and size of fixtures and openings before rough-in and installation.

3.02 INSTALLATION

A. Install plumbing fixtures complete with necessary fittings, gaskets, fastenings, supports, bolt caps, and similar items. Connect to piping services for water, waste, and vent, as necessary.

B. Provide water hammer arresters as specified in Section 22 30 00.

C. Install each fixture with trap, easily removable for servicing and cleaning. Remove manufacturer’s tags and labels and deliver to Owner. At Substantial Completion, thoroughly clean plumbing fixtures and equipment.

D. Provide chrome-plated rigid or flexible supplies to fixtures with screwdriver stops, reducers, and chrome plated escutcheons.

E. Solidly attach wall-mounted fixtures with bolts and backing plates.

F. Install hose end faucets and hose connections with vacuum breakers.

G. Install plumbing fixtures and trim supplied with casework and fume hoods.

H. Neatly calk joints between plumbing fixtures, walls, counters, and floors. Remove excess calk. Refer to Section 07 90 00 for calking requirements. Calk shall be color as selected by Engineer.

I. Install new cartridge in waterless urinals before turning over installation to Owner.

J. Do not use waterless urinals during construction unless approved by Owner in writing.

3.03 PROTECTION

A. Protect fixtures against use and damage during construction period.

B. Fixtures shall not be used as temporary facilities unless approved in writing by Owner.

END OF SECTION

SECTION 23 05 93 – TESTING, ADJUSTING, AND BALANCING FOR HVAC

PART 1 GENERAL

1.01 SECTION INCLUDES

A. Procedures, general.
B. Final reports.
C. Contractor responsibilities.
D. Preparation.
E. Schedule of systems requiring testing, adjusting, and balancing services.

1.02 INFORMATIONAL SUBMITTALS

A. Prior to start of Work, submit name of Contractor personnel proposed to perform services. Designate managerial responsibilities for coordination of entire testing, adjusting, and balancing.
B. Submit documentation to confirm personnel qualifications.
C. Submit 3 preliminary specimen copies of each of report forms proposed for use.
D. Fifteen days prior to Substantial Completion, submit 3 copies of final reports. Submit reports of testing, adjusting, and balancing which is postponed due to seasonal, climatic, occupancy, or other reasons beyond Contractor's control, promptly after execution of those services.
E. Schedule of start-up to Engineer.
F. Contractor shall prepare instrument calibration reports in duplicate for each instrument and control loop. Include instrument calibration data and status of equipment. Note any deficiencies yet to be corrected on instruments that are suitable for operation (e.g.: broken lenses, faulty local indicators on transmitters that can still perform correct output transmission) Contractor shall correct these deficiencies at earliest possible date. Copies shall be submitted for Resident Project Representative's review. Each calibration report shall be signed by Contractor's representative witnessing test.
    1. Electrical systems test reports: Typewritten, listing equipment used, person or persons performing tests, date tested, circuits tested, and results of tests.
    2. Environmental test reports:
        a. Preliminary:
            1) Submit 3 copies of documentation to confirm compliance with quality assurance provisions:
                a) Organization supervisor and personnel training and qualifications.
                b) Specimen copy of each report form proposed for use.
            2) Second: At least 15 days prior to starting field work, submit 3 copies of:
                a) Set of report forms filled out as to design flow values and installed equipment pressure drops, and required cfm for air terminals.
                b) Complete list of instruments proposed to be used, organized in appropriate categories, with data sheets for each. Show:
                    (1) Discrepancies noted between data shown and Contract Documents.
                    (2) Additional, or more accurate, instruments required.
                    (3) Requests for re-calibration of specific instruments.
            3) Third: At least 15 days prior to Contractor's request for final inspection, submit three copies of final reports, on applicable reporting forms, for review.
                a) Schedule testing and balancing of parts of systems which is delayed due to seasonal, climatic, occupancy, or other conditions beyond control of Contractor, as early as proper conditions will allow, after consultation with Engineer.

b) Submit report of delayed testing promptly after execution of those services.

b. Form of final reports:
   1) Each individual final reporting form must bear signature of person who recorded data and that of testing, adjusting, and balancing supervisor of reporting organization.
   2) When more than 1 certified organization performs testing, adjusting, and balancing services, firm having managerial responsibility shall make submittals.
   3) Identify instruments of types that were used, and last date of calibration of each.
   4) Record and submit all data measured including air flow, pressure drops, motor loads, and all other data requested in "Environmental Systems," this Section.

G. At completion of Work, Contractor shall submit to Owner certification that equipment has been commissioned and is in operating condition in accordance with Contract Documents.

H. Final reports:
   1. Organization having managerial responsibility shall make reports.
   2. Each form: Bear signature of recorder, and that of supervisor of reporting organization.
   3. Identify each instrument used and latest date of calibration of each.

1.03 QUALITY ASSURANCE

A. Comply with procedural standards of certifying association under whose standards service will be performed.

B. Notify Engineer 3 days prior to beginning of operations.

C. Accurately record data for each step.

D. Comply with applicable procedures and standards of certification sponsoring association; either:
   1. "National Standards for Field Measurements and Instrumentation, Total Systems Balance, Air Distribution-Hydronics Systems," by AABC, International Standards for Environmental Systems Balance" by TABB, or "Procedural Standards for Testing, Adjusting and Balancing of Environmental Systems," by NEBB.
   2. Perform services under direction of supervisor who is designated and qualified under certification requirements of sponsoring association.
   3. Calibration and maintenance of instruments shall be in accordance with requirements of standards, and calibration histories for each instrument shall be available for examination.
   4. Accuracy of measurements shall comply with requirements of standards.

E. Comply fully with procedural standards of certifying association under whose standards service will be performed.
   1. Execute each step of prescribed testing, adjusting, and balancing procedures without omission.
   2. Accurately record required data.

1.04 JOB CONDITIONS

A. Prior to start of testing, adjusting, and balancing, verify that required "job conditions" are met:
   1. Systems installation is complete and in full operation.
   2. Outside conditions are within reasonable range relative to design conditions.
   3. Special equipment such as computers, laboratory equipment, and electronic equipment are in full operation.

B. Verify that requirements for preparation for testing and balancing have been met for elements of each of systems that require testing.

1.05 COORDINATION

A. Coordinate services with Work of various trades to ensure rapid completion of services.
B. Promptly report to Engineer any deficiencies noted during performance of services.

PART 2 PRODUCTS

2.01 SYSTEM REQUIREMENTS

A. Prepare each system for testing and balancing.
B. Cooperate with testing organization, provide access to equipment and systems. Operate systems at designated times, and under conditions required for proper testing, adjusting, and balancing.
C. Notify testing organization 10 days prior to time system will be ready for testing, adjusting, and balancing.
D. Perform specified services with Contractor's qualified personnel, or employ and pay for qualified organization to perform specified services.
E. Perform testing of control station equipment, balancing of distribution system, and adjustment of terminal devices for HVAC systems of Project.
F. Provide instruments required for testing, adjusting, and balancing operations.
    1. Make instruments available to Engineer to facilitate spot checks during testing.
    2. Retain possession of instruments; remove from Site at completion of services.
G. Furnish material, tools, and labor required to perform start-up of each respective item of equipment, instrument and system:
H. Provide information and assistance required, cooperate with test, adjust, and balance services.
I. Comply strictly with specified manufacturer's or Engineer's procedures in starting up specified systems.

2.02 MATERIALS

A. Provide and maintain tools and test equipment in first-class condition and quantities sufficient to assure successful performance and completion of required Work.
B. Furnish and use materials in accordance with these Specifications. Materials shall be of first-class quality, free from defects or imperfections, of recent manufacture, unused and of classification and grade specified.
C. Test equipment shall have recent calibration checks by equipment manufacturer or authorized facility to assure accuracy of commissioning process.
D. Piping system joint leak testing compound: "Leak-Tek," or equal.
E. Anti-rust compound for packing gland threads and valve stems: "Moly-Cote" or "Fel-Pro."

PART 3 EXECUTION

3.01 PREPARATION

A. Provide instruments required for testing, adjusting, and balancing operations. Make instruments available to Engineer to facilitate spot checks during testing. Retain possession of instruments and remove at completion of services.
B. Verify installation of system to be tested is complete and in continuous operation.
C. Verify ambient conditions and related facilities are in full operation.

3.02 MECHANICAL SYSTEMS

A. Bearings:
   1. Inspect for cleanliness; clean and remove foreign materials.
   2. Verify alignment.
   3. Replace defective bearings, and those that run roughly or noisily.
   4. Grease as necessary, and in accordance with manufacturer's recommendations.
B. Drives:
   1. Adjust tension in V-belt drives, and adjust varipitch sheaves and drives for proper equipment speed.
   2. Adjust drives for alignment of sheaves and V-belts.
   3. Clean; remove foreign materials before starting operation.
C. Motors:
   1. Check each motor for amperage comparison to nameplate value.
   2. Correct conditions which produce excessive current flow, and which exist due to equipment malfunction.
D. Pumps:
   1. Check mechanical seals for cleanliness and adjustment before running pump.
   2. Inspect shaft sleeves for scoring.
   3. Inspect mechanical faces, chambers, and seal rings; replace if defective.
   4. Verify that piping system is free of dirt and scale before circulating liquid through pump.
   5. Check expansion joints for proper installation before running.
   6. Check sealing fluid supply for flushed mechanical seals.
   7. Check impeller for correct installation.
E. Piping systems:
   1. Tighten flanges after system has been placed in operation. Replace flange gaskets which show any sign of leakage after tightening.
   2. Inspect screwed joints for leakage.
      a. Promptly remake each joint that appears to be faulty; do not wait for rust to form.
      b. Clean threads on both parts, apply compound, and remake joints.
   3. After system has been placed in operation, clean strainers, dirt pockets, orifices, valves seats, and headers in fluid systems, to assure they are free of foreign materials.
   4. Open air vents; remove operating elements. Clean thoroughly, replace internal parts and put back into operation.
   5. Remove any rust, scale, and foreign materials from equipment and renew defaced surfaces.
   6. Repair damaged insulation.
   7. Vent gasses trapped in any part of systems.
   8. Check piping for leaks at every joint, and at every screwed, flanged, or welded connection.
   9. Control valves:
      a. Inspect both hand and automatic control valves; clean bonnets and stems.
      b. Tighten packing glands to ensure no leakage, but permit valve stems to operate without galling.
      c. Replace packing in valves to retain maximum adjustment after system is judged complete.
      d. Replace packing on any valve that continues to leak.
      e. Remove and repair bonnets that leak.
      f. Coat packing gland threads and valve stems with surface preparation of anti-rust compound after cleaning.

3.03 ENVIRONMENTAL SYSTEMS

A. Perform testing of central station equipment, balancing of distribution systems, and adjusting of terminal devices for:
   1. Air handling units.
   2. Return, supply, and exhaust fans.
   3. Air distribution systems.
   4. Water distribution systems.
   5. Pumps.
   6. Chillers.
   7. Boilers and heat exchangers.
   8. Heating terminal units.
   9. Volume Control Units (VCU): Minimum and maximum airflow.
   10. Domestic hot water recirculation systems.

B. Air balancing:
   1. Make measurements in accordance with recognized procedures and practices of certifying association.
   2. Measure air volume discharged at each outlet and adjust air outlets to design air volumes within 10% over or under.
   3. Adjust fan speeds and motor drives within drive limitations for required air volume. Set speed to provide air volume at farthest distance without excess static pressure.
   4. Measure and adjust air supply and exhaust fan units to deliver design conditions at 100%.
   5. Adjust outside air automatic dampers, outside air, return air, and exhaust dampers for design conditions.
   6. Measure static air pressure conditions on air supply units, including filter and coil pressure drops, and total pressure across fan.
   7. Evaluate building and room pressure conditions to determine adequate supply and return air conditions.
   8. Evaluate space and zone temperature conditions to determine adequate performance of systems to maintain temperatures without draft.
   9. Measure temperature conditions across outside air, return air, and exhaust dampers to check leakage.
   10. Mark balancing dampers and cocks.

3.04 INSTRUMENTATION SYSTEMS

A. Commission controls and instruments prior to start-up to assure in situ performance in accordance with specifications under simulated operating conditions. Contractor to determine initial start-up conditions.

B. Remove shipping stops from instruments before starting with procedures listed herein. Contractor shall have instruction manuals available, and shall install miscellaneous components such as charts, illumination, mercury, etc., which have been supplied separately but are integral parts of equipment.

C. If any doubt exists as to correct method for calibrating or checking calibration of instrument, manufacturer's printed recommendations shall be used.

D. Many instruments contain small supply pressure gages or output pressure gages. Calibration of these gages will not be required. However, if gage is found to be defective, instrument involved shall be immediately called to attention of Engineer and reporting of its condition confirmed in writing.

E. If any instrument cannot be properly adjusted, it shall be immediately called to attention of Engineer and report of its condition confirmed in writing.

F. Instrument check: Verify data on nameplate with respect to conditions of range, operating temperature, specific gravity, and components as stated on unit specifications. Any

discrepancies shall be immediately called to attention of Engineer and report of condition confirmed in writing.

G. Verify that control valve seats are free from foreign material, and are properly positioned for intended service.

H. Test procedures:
   1. Check handswitches, pushbuttons, and pilot lights.
   2. Check interlocking circuits installed for conformance to schematic diagrams and "Sequence of Operation."
   3. Perform Work of placing in initial operation equipment installed or wired under this contract, following instructions and recommendations of equipment manufacturers.
      a. After energizing and prior to start-up, check control circuits for proper sequence of operation and interlocking functions.
      b. Wiring changes required as result of such checks shall be properly identified by changing terminal strip and/or wiring markers.
   4. Contractor shall provide necessary construction labor to make equipment final adjustments that are required to place systems in good operating condition, and furnish labor to assist in solving instrument or control problems.
   5. Contractor shall calibrate instruments and components in accordance with manufacturer's calibration data over full operational range, prove instruments to be within published specification, accuracy, and affix calibration sticker. Instruments shall be calibrated individually and where applicable, as system. Components which have adjustable features shall be carefully set for specific conditions and applications of this Project. Each calibration sticker shall be signed by Contractor's representative witnessing test.
   6. Calibration sticker shall contain the following information: Equipment identification tag number, range of calibration, and date and name of person doing calibration.
   7. Pressure gages: Shall be checked at 10%, 50%, and 90% of their ranges for linearity within Manufacturer's stated specifications.
   8. Gages not meeting manufacturer's specifications shall be repaired or replaced.
   9. Dial thermometers shall be checked at mid-range and ambient temperature. Thermometers not meeting manufacturer's specifications shall be repaired or replaced.
   10. Temperature switches: Calibrate in accordance with manufacturer's specifications.
   11. Valves and operations:
      a. Control valves: Operation of control valve shall be verified within limits of practicality. Particular attention must be given to manufacturer's instructions and applicable nameplate data in reference to valve spring scale and actuation conditions. Pay close attention to bench set.
      b. Valve action: Check valve action for conformance to specifications (open or closed on power failure).
      c. Valve positioner: Check for conformance to specifications relative to spring action and input range (particularly for split range applications), valve action, and length of stroke. If valve positioner is fitted with standard characterized cam, check to see if proper cam is mounted. If specifications call for specially cut cam, refer this item in writing to Engineer for handling. Do not cut or modify standard cam.
   12. Panel-mounted instruments:
      a. Receiver instruments: Check zero and span at 10%, 50% and 90% of range by impressing measured signal into input or signal connections or instrument.
      b. Controllers:
         1) Controllers shall be checked for proper operation and adjusted in accordance with manufacturer's instructions. Vary process input signal and check output signal for direction.

2) Set initial proportional band, reset rate, and rate time as recommended by Manufacturer. It may be necessary to determine process dynamics in actual operation before settings can be made.
3) Control loops shall be observed for operability and conformance to specifications by impressing simulated input signal at primary element and checking response of final control element.

c. Integrators, ratio relays, etc.: Check in conformance to manufacturer's recommendations. Receiver integrators can be calibrated for proper operation and multiplication factor by feeding maximum input signal (20 mA, etc.) for specified period of time with stop watch. Check in conformance with manufacturer's recommendations. Ratio signals can be simulated to check proper ratio settings and output.

13. Controllers; field mounted: Simulate "Set Point" and "Measured Variable" signals at controller, with separate regulated signals. Check operation as in Item "11., b." preceding.
14. Acceptable calibration standards:
    a. Vacuum or draft:
        1) 0" to 5" w.c.: Inclined water filled manometer graduated in tenths and inches of water.
        2) 5" to 25" Hg: Mercury manometer graduated in inches of mercury.
        3) 5" to 60" H_20: Water manometer graduated in inches of water.
    b. Pressure:
        1) 0" to 5" w.c.: Inclined water filled manometer graduated in tenths and inches of water.
        2) 5" to 60" w.c.: Water manometer graduated in inches of water.
        3) 3 to 25 psig: Mercury manometer graduated in psi.
        4) 25 to 150 psig: Precision pressure gage, 0-160 psi, 1/4 of 1% accuracy, 8-1/2" dial minimum.
        5) 150 to 750 psig: Precision pressure gage, 0-800 psi, 1/2 of 1% accuracy, 8-1/2" dial minimum.
        6) 750 to 2,750 psig: Precision pressure gage, 0-3,000 psi, 1/2 of 1% accuracy, 8-1/2" dial minimum.
    c. Differential:
        1) 0" to 5" w.c.: Inclined water filled manometer graduated in tenths and inches of water.
        2) 5" to 300" w.c.: Mercury manometer graduated in inches of water.
        3) 5 to 25 psig: Mercury manometer graduated in psi.
        4) Above 25 psig: Use pressure gages listed hereinbefore.
    d. Temperatures:
        1) -20 to 250ºF: Laboratory thermometers of suitable range.
        2) Other ranges: Use thermocouple and precision potentiometer.
    e. Others:
        1) Precision millivolt potentiometer: Portable.
        2) Rotameter: Range, 6.5 to 65 cu cm/min of air.
        3) Equipment as specified by manufacturer's instructions.
        4) Wallace & Tiernan or Mansfield-Green pneumatic calibrator; range, vacuum to +24 psi: For vacuum, pressure, or differential.

3.05 SCHEDULE OF SYSTEMS REQUIRING TESTING, ADJUSTING, AND BALANCING SERVICES

A. Section 23 33 00 – Air Duct Accessories.
B. Section 23 34 00 – HVAC Fans
C. Section 23 81 00 – Decentralized Unitary HVAC Units
D. Section 23 82 39 – Unit Heaters

END OF SECTION

SECTION 23 31 00 – HVAC DUCTS AND CASINGS

PART 1 GENERAL

1.01 SECTION INCLUDES

A. Metal ducts.

B. Epoxy coating.

C. Double-wall manufactured ducts.

1.02 DEFINITIONS

A. Duct sizes: Inside clear dimensions. For acoustically lined or internally insulated ducts, maintain scheduled sizes inside lining or insulation.

B. Pressure class:
   1. See application table for pressure class requirements for each duct system.
   2. Pressure classes shall correspond to pressure classes defined by SMACNA in HVAC Duct Construction Standards Metal and Flexible – Third Edition.
   3. Each pressure class shall be suitable for positive or negative pressure applications.

C. Leakage class:
   1. See leakage class table for requirements for each duct system.
   2. Leakage classes shall correspond to leakage classes defined by SMACNA in HVAC Air Duct Leakage Manual, Second Edition 2012.

1.03 PERFORMANCE REQUIREMENTS

A. Guarantee ductwork to be free of vibration, chatter, objectionable pulsation, and excessive leakage under all conditions of operation.

1.04 QUALITY ASSURANCE

A. Use material, weight, thickness, gage, construction, and installation methods as outlined in following SMACNA publications:
   1. SMACNA Duct Construction Standards Metal & Flexible, Third Edition.
   2. SMACNA Fibrous Glass Duct Construction Standards, Seventh Edition.

B. Construct and install ductwork in accordance with provisions of International Mechanical Code.

C. Perform leakage test as outlined in SMACNA HVAC Air Duct Leakage Manual Second Edition 2012.

D. Verify field measurements prior to fabrication.

PART 2 PRODUCTS

2.01 MATERIALS

A. Galvanized sheet steel:
   1. Cold-rolled, soft sheet steel capable of double seaming without fracture.
   2. Zinc coating: G90 in accordance with ASTM A653 and ASTM A90.

B. Paintable galvanized sheet steel:
   1. Cold-rolled, soft sheet steel capable of double seaming without fracture.
   2. Zinc coating: G90 in accordance with ASTM A653 and ASTM A90.
   3. Duct surface shall undergo mil phosphatizing process in accordance with ASTM D2092 to prep ductwork for painting.

C. Glass fiber duct lining:
   1. Thickness: See schedule this Section.
   2. Density: 1-1/2 lb/cu ft (24 kg/cu m).
   3. Meets requirements of ASTM C1071 except as modified below.
   4. Thermal conductivity: Not more than 0.27 Btu-in/hr-ft2-ºF (0.039 W/(m-K)).
   5. Maximum air velocity of 6,000 fpm (30.5 m/s)
   6. ASTM C423 noise reduction coefficient: 0.60.
   7. UL 181 Class 1 listing.
   8. Meets flame spread and smoke developed requirements of NFPA 90A and 90B.
   9. Provide acrylic or other suitable coating on surfaces exposed to airstream.
   10. Coat duct lining with EPA-registered biocide to meet requirements of ASTM C1071 for fungi and bacterial resistance.
   11. Manufacturer: Johns Manville “Linacoustic RC,” or equal by Owens Corning or Kanuf.

D. Sealant:
   1. Water-based, water-resistant.
   2. Fire-resistive.
   3. Compatible with mating materials.
   4. Elastomeric mastic
   5. Maintain manufacturer’s recommended temperatures during and after installation.

E. Epoxy coating:
   1. Film thickness: 12 to 15 mils (0.30 to 0.38 mm)
   2. Percent solids: 56% by volume.
   3. Coverage: 53 sq ft/gal. (1.3 m2/L)
   4. Type: Cross-linked epoxy phenolic amine.
   5. Manufacturer: Wisconsin Protective Coating Corporation, Heresite Protective Coatings, Inc., Whitford Corporation, or equal.

2.02 MANUFACTURED DUCTWORK

A. Type: Double-wall.

B. Construction: Spiral lockseam.

C. Outer shell: ASTM A653 galvanized sheet steel.

D. Inner lining: Perforated ASTM A653 galvanized sheet steel, 22% open area.

E. Insulation: 1" (25 mm) thick glass fiber insulation. Insulation shall meet requirements of glass fiver duct lining specified in this section.

F. Fittings:
   1. Machine-formed, 1.5 centerline radius or sectional.
   2. Spot or tack welded and sealed.
   3. For tees and reducing tees: “LO-LOSS” type.

G. Internal bracing: Not acceptable.

H. Provide shipping braces or rigid duct connectors to retain proper shape during shipping. If shipping braces are used, remove before installation of duct.

I. Manufacturer: McGill Airflow “Accousti-k27”, or equal.

PART 3 EXECUTION

3.01 FABRICATION AND INSTALLATION

A. Fabricate and install duct, fittings, reinforcement, and supports in accordance with SMACNA recommendations except as modified below.
   1. Complete metal ducts within themselves with no single partition between ducts. Where width of duct exceeds 18" (450 mm), cross break for rigidity. Open corners are not acceptable.
   2. Increase duct sizes gradually, not exceeding 15º divergence wherever possible. Maximum divergence upstream of equipment shall be 30º; convergence downstream of equipment shall be 45°.
   3. Provide easements where ductwork conflicts with piping and structure. Where easements exceed 10% of duct area, split into two ducts maintaining original duct area.

B. Ductwork - general:
   1. Construct ductwork so interior surfaces are smooth. Use rivets or nuts and bolts for fabricating ductwork. Sheet metal screws may be used on duct hangers, transverse joints, and other SMACNA-approved locations if screw does not extend more than 1/2" (15 mm) into duct. Seal fastener locations where leakage could occur and seal ductwork according to SMACNA recommendations with regard to pressure class of duct.
   2. Use elbows, tees, lateral, crosses and accessory fittings as needed to fabricate duct systems.
   3. Use elbows and tees with a centerline radius to width or diameter ratio of 1.5 wherever space permits. When shorter radius must be used due to limited space, install sheet metal turning vanes through entire length of fitting. Where space will not allow use of shorter radius elbow or tee, install mitered fitting with double-wall turning vanes. Square throat-radius heel elbows shall not be acceptable.
   4. Construct branch take off with 45º take off fitting connection 1-1/2 times area of branch duct.
   5. Use splitter dampers and/or extractors only where manual volume dampers will not accomplish intended balancing. Use of splitter dampers and/or extractors shall not eliminate need for specified or indicated manual volume dampers.

6. Lap metal ducts in direction of air flow. Hammer down edges and slips to leave smooth duct interior.
7. Rigidly construct metal ducts with joints mechanically tight, substantially airtight, braced and stiffened so as not to breathe, rattle, vibrate, or sag.
8. Fasten hangers to duct with nuts and bolts or surround duct with hanger strap to provide a single hanging point for round duct. Trapeze hangers may be used. Internal duct hangers not accepted.
9. Provide sufficient clearances between duct and beams, pipes, or other obstructions in building construction and for work of other trades. Check drawings showing work of other trades and consult with Engineer in event of any interference. Transform, divide, or offset ducts as required, in such a manner as to maintain same cross sectional area of duct as indicated on Drawings. Where it is necessary to take pipes or similar obstruction through ducts, ducts need not be enlarged if decrease in area does not exceed 10%. If decrease in area would exceed 10%, enlarge duct to maintain duct area not less than 90%. In all cases, provide a streamlined casement or collar designed in accordance with SMACNA and seal to prevent air leakage.
10. Provide frames constructed of angles or channels for coils, filters, dampers, or other devices installed in duct systems, and make connections to such equipment including equipment furnished by others. Secure frames with felt gaskets, nut, bolts, and washers.
11. Remove dirt and foreign matter from entire duct system and clean diffusers, registers, and grilles before operating fans and/or before balance begins.
12. Install motor-operated dampers and connect to or install equipment furnished by others.
13. At outside air intakes, install duct to pitch to intakes and to drain to outside of building. Solder or calk on airside seams to form watertight joints. Blank off unused portions of louvers with 1-1/2" (40 mm) board insulation with galvanized sheet metal backing on both sides.
14. Seal transverse joints and all seams.
15. Sealant shall be installed as recommended by manufacturer.
16. Use of tape without sealant shall not be acceptable

C. Ductwork 3” (750 Pa) pressure class and greater:
1. Fabricate and install ductwork, fitting, and reinforcement in accordance SMACNA recommendations.
2. Field joints shall be slip type with sealer applied between joints and riveted. Apply 2" (50 mm) band of duct sealer on outside of joint and duct tape.
3. Use of splitter dampers and/or extractors not allowed.
4. Use elbows, tees, lateral, crosses and accessory fittings as needed to fabricate duct systems.
5. Provide positive and negative relief fittings.
6. Seal all joints, seams and wall penetrations.

D. Duct pressure test:
1. Perform pressure test on representative duct sections on Project totaling minimum of 25% of total installed duct area for each pressure class above 3” w.g (750 Pa) and 100% of all duct systems located outdoors. Owner will select specific duct sections for testing.
2. Pressure test ductwork with Contractor-furnished calibrated test apparatus.
3. Pressure test shall test duct system in sub systems as required to isolate equipment (AHU, Terminal unit, coils, etc) from duct system.
4. Conduct test at pressure rating of duct section, record data in a neat manner before allowing duct to be insulated.

5. Leakage rate shall not exceed allowable values for duct pressure class, seal class, and leakage class specified. Where leakage rate exceeds allowable rate from SMACNA HVAC Air Duct Leakage Manual, locate leak sources, repair, and retest. If more than 10% of tested sections exceed allowable leakage rate, test 100% of duct system.
6. Leakage classes shall be as follows:

Duct Pressure Class in. w.g. (Pa)	Leakage Class	
	Rectangular Duct	Round or Flat Oval Duct
0.5 (125)	16	8
1 (250)	16	8
2 (500)	16	8
3 (750)	8	4

7. If air leakage more than specified above is found during pressure testing and/or air balancing, locate and seal source of leakage. Repair any damage to insulation or other construction.

E. Hangers and supports:
1. Support rigid round, rectangular, and flat oval metal ducts with support systems indicated in “Hangers and Supports” chapter of SMACNA Duct Construction Standards.
2. Provide supports as required to maintain alignment.
3. Provide additional supports within 2’ (0.6 m) of each elbow and 4’ (1.2 m) of each branch intersection.

F. Seismic restraint of ducts: Provide seismic restraint of all ducts in accordance with SMACNA Seismic Restraint Manual (1998 Edition with Addendum 1), and in accordance with local Building Code. Seismic Hazard levels shall be D.

G. Duct liner
1. Apply liner with 100% coverage of fire-resistant adhesive, stick clips or weld pins on minimum 15" (375 mm) centers.
2. Mechanical fasteners shall be installed flush with liner surface with pins clipped back to each fastener.
3. Coat leading edge of liner cross joints and damaged areas with a heavy layer of fire-resistant adhesive.
4. Install sheet metal foil at termination of liner.
5. Where duct velocity exceeds 2000 fpm (10 m/s) provide metal nosing on all upstream edges of duct liner.

H. Sealing requirements:
1. Ducts less than 3” (750 Pa) pressure class:
   a. Minimum of SMACNA Seal Class A
   b. Seal transverse joints and all longitudinal seams
   c. Sealant shall be installed as recommended by manufacturer.
   d. Use of tape without sealant shall not be acceptable
2. 3” (750 Pa) and higher pressure class
   a. Minimum of SMACNA Seal Class A
   b. Seal all transverse joints, longitudinal seams and duct wall penetrations.
   c. Sealant shall be installed as recommended by manufacturer
   d. Use of tape without sealant shall not be acceptable.

3.02 APPLICATION

Duct Application	Duct Material	Minimum Pressure Class	Insulation
Supply on systems without high velocity Terminal units Return/Relief	Double Wall Galvanized: Concealed or exposed in all spaces. Paintable galvanized: Exposed	2" w. g. (500 Pa)	Rectangular: 1" (25 mm) lining Round: Section 20 07 00
Exhaust	Galvanized: Exposed in mechanical / electrical rooms: Epoxy Coated: Exposed in chemical rooms and in contact with chemical exhaust air streams.	2" w. g. (500 Pa)	Rectangular: 1" (25 mm) lining Round: Section 20 07 00
Outdoor air	Galvanized: Concealed or exposed in mechanical / electrical rooms Paintable galvanized: Exposed	2" w. g. (500 Pa)	Section 20 07 00
Ducts not indicated above	Galvanized: concealed or exposed in mechanical / electrical rooms Paintable galvanized: Exposed	2" w. g. (500 Pa)	Rectangular: 1" (25 mm) lining Round: Section 20 07 00

END OF SECTION

1) Chad M. Finn
2) Paul M. Breuer

SECTION 23 33 00 – AIR DUCT ACCESSORIES

PART 1 GENERAL

1.01 SECTION INCLUDES

A. Access doors.
B. Fire dampers.
C. Balancing dampers.
D. Backdraft dampers.
E. Flexible connections.
F. Flexible duct.
G. Prefabricated roof curbs.
H. Prefabricated roof rails.

1.02 INFORMATIONAL SUBMITTALS

A. Shop Drawings: Data concerning dimensions, capacities, ratings and appropriate identification.
B. Product Data: Manufacturer's technical product data for each type of ductwork accessory, including dimensions, capacities, and materials of construction; and installation instructions.

1.03 QUALITY ASSURANCE

A. Manufacturer’s qualifications: Manufacturers must have at least 5 years experience manufacturing duct accessories, of required types and sizes and whose products have been satisfactory used in similar service.
B. Regulatory requirements:
   1. Fire dampers and Combination Fire/Smoke Dampers: UL-listed and constructed in accordance with UL 555.
   2. Combination Fire/Smoke Dampers and Smoke Dampers: UL listed and constructed in accordance with UL 555S
   3. Fusible links: UL-listed and constructed in accordance with UL 33.
   4. Access doors: UL-listed.
   5. Use material, weight, thickness, gage, construction, and installation method as outlined in:
   6. SMACNA Duct Construction Standards - Metal & Flexible, Third Edition.
   7. NFPA 90A - Standard for Air Conditioning and Ventilating Systems.
   8. NFPA 90B - Standard for Installation of Warm Air Heating and Air Conditioning Systems.
   9. UL 214 - Test for Flame-Propagation of Fabrics and Films.

PART 2 PRODUCTS

2.01 ACCESS DOORS

A. Fabricate rigid and close fitting doors of materials identical to duct with sealing gaskets and quick fastening locking devices. For insulated ductwork, install minimum 1" (25 mm) thick insulation with sheet metal cover.
B. Hinges and locks:
   1. Minimum 2 hinges and 1 sash lock for sizes up to 12" (300 mm) square.
   2. Minimum 2 hinges and 2 sash locks for sizes up to 18” (450 mm) square.

3. Minimum of 3 hinges and 2 sash locks for sizes up to 24" (600 mm) square.

C. Units shall be suitable for duct pressure class in which it is to be installed.
D. Manufacturer: Ventfabrics Inc., Ruskin, Duct Mate Industries, Inc. or equal.

2.02 DYNAMIC FIRE DAMPERS

A. Rating:
   1. Fire UL 555 rated for horizontal or vertical installation.
   2. Rating: Provide 1-1/2 hour or 3 hour rating as indicated on Drawings and as required by building code.
   3. Dynamic: 2,000 fpm at 4" w.g (10.2 m/s at 1kPa).

B. Construction:
   1. Housing: Galvanized steel for galvanized steel ducts, stainless steel for stainless and aluminum ducts.
   2. Blade: Folding curtain type 100% out of airstream (Type B) material to match housing.

C. Fusible link: 165ºF (74°C).
D. Fire dampers shall be rated to close with airflow in either direction.
E. Provide bracing, sleeves, and other accessories required by damper manufacturer to meet rated installation requirements.

2.03 MANUAL BALANCING DAMPERS

A. Rectangular dampers
   1. Single blade dampers:
      a. Suitable for ducts 12" (300 mm) in height and less and 36" (900 mm) in width and less.
      b. Construction:
         1) Frames: Galvanized steel minimum 20-gage (0.9 mm) channel, or minimum 0.081" (2.1 mm) aluminum channel.
         2) Blades: Single thickness, galvanized steel minimum 22-gage (0.8 mm) for 18" (450 mm) wide and less and 20-gage (0.9 mm) over 18" (450 mm) or aluminum minimum thickness of 0.080" (2.032 mm). Blades shall be stiffened as necessary.
         3) Axles: Minimum 3/8" (10 mm) diameter galvanized steel for ducts 18" (450 mm) wide and less, minimum 1/2" (13 mm) diameter galvanized steel for ducts and over 18" (450 mm). Use stainless steel for stainless or aluminum ducts.
         4) Bearings. Oil-impregnated bronze bearings or molded synthetic.
   2. Multi-blade dampers: Suitable for all ducts.
      a. Frames: galvanized steel minimum 16-gage (1.5 mm), or minimum thickness of 0.081" (2.1 mm) aluminum channel.
      b. Blades: opposed type, 6" (150 mm) maximum width, galvanized steel minimum 16-gage (1.5 mm), or extruded aluminum minimum thickness of 0.125" (3 mm).
      c. Axles: Minimum 1/2" (13 mm) diameter galvanized or extruded.
      d. Bearings. Oil-impregnated bronze bearings or molded synthetic.

e. Linkage: Galvanized steel located outside of air stream. For multi-section dampers, provide jackshaft for operation from one side.

B. Round dampers:
   1. Single blade dampers.
   2. Construction:
      a. Frame: Galvanized steel minimum 20-gage (0.9 mm).
      b. Blades: Single thickness galvanized steel minimum 20-gage (0.9 mm).
      c. Axles: Minimum 3/8”diameter or square galvanized steel bar.
      d. Bearings: Oil impregnated bronze bearings or molded synthetic.

C. Provide with locking hand quadrant with damper position indicator. Where duct is externally insulated provide 2” (50 mm) minimum standoff bracket.
D. Construct dampers over 48" (1.2 m) in width in multiple sections with mullions.
E. Provide end bearings or other seals on dampers located in 3” (750 Pa) pressure class or higher ducts.

2.04 BACKDRAFT DAMPERS

A. Type: Rectangular; multi-blade, counterbalanced type; suitable for flange and gasket connection to ductwork.
B. Construction:
   1. Frames: Minimum 20-gage (0.9 mm) galvanized steel, or 0.081” (2.1 mm) thick extruded aluminum channel.
   2. Blades: 28-gage (0.4 mm) galvanized steel or 0.070” (1.8mm) thick extruded aluminum
   3. Axles: Minimum 3/16" (5 mm) diameter steel axle and blade bracket assembly, or 1/2” (13 mm) diameter, synthetic, full length.
   4. Bearing: Oil impregnated bronze bearings or nylon.
   5. Seals: Vinyl gasket or blade edge seals.

C. Performance: Rate dampers in accordance with AMCA Standard 500
   1. Leakage: maximum of 15 cfm/sq. ft. at 1” w.g. (76.5 l/s/sq. m at 250 Pa).
   2. Blades begin to open at 0.05” w.g. (12.5 Pa) maximum.

2.05 FLEXIBLE CONNECTIONS

A. Provide flexible duct connections wherever ductwork connects to vibration isolated equipment. Construct flexible connections of neoprene-coated flameproof fabric crimped into duct flanges for attachment to duct and equipment. Make airtight joint. Provide adequate joint flexibility to allow for thermal, axial, transverse, and torsional movement, and also capable of absorbing vibrations of connected equipment
B. Material: Fire-retardant, waterproof, airtight, and comply with UL 214, NFPA 90A, and NFPA 701; 30 oz/sq yd, closely woven glass fabric, double coated with neoprene.
C. Flexible connection fabric shall be approximately 2" (50 mm) wide tightly crimped into metal edging strip and attach to ducting and equipment by screws or bolts at 6" (150 mm) intervals.
D. Manufacturer: Ventfabrics, Inc., Duro Dyne Corp., Ductmate Industries, Inc.., or equal.

2.06 FLEXIBLE DUCT

A. Description: UL 181 Class I flexible duct complying with NFPA 90A and 90B

B. Construction:
   1. Inner liner: Chlorinated polyethylene factory clinched in cold-rolled galvanized steel spiral, or with spiral wire permanently bonded to fabric,
   2. Insulation: Fiberglass insulation thickness for R-value indicated.
   3. Outer jacket: Flame-resistant polyethylene vapor barrier.

C. Performance:
   1. R-value: 4.2 minimum.
   2. Maximum operating pressure: 6” w.g. (1.5 kPa).
   3. Operating temperature: -20°F to 220°F (-29°C to 104°C).
   4. Maximum flame smoke rating: Maximum of 25/50.

D. Manufacturer: Thermaflex, FlexMasterUSA, ATCO Rubber Products, Inc, or equal.

2.07 PREFABRICATED ROOF CURBS

A. Construction:
   1. 18-gage (1.2 mm), galvanized steel, 55% aluminum-zinc coated sheet, all-welded. Suitable for roof type shown on Drawings and suitable for roof slope indicated to provide level equipment mounting surface.
   2. Corners: Mitered and continuously welded.
   3. Insulation: 1-1/2" (38 mm) thick neoprene coated, 1-1/2 lb/cu ft (24 kg/cu m) density, rigid fiberglass.
   4. Wood nail strip: 2 x 2 treated with high quality wood preservative.

B. Accessories:
   1. Plywood deck with curb cover for future curbs as shown.
   2. Provide vents for hoods serving kitchen equipment.

C. Height: 16" (400 mm) minimum.
D. Size: As required for use with mechanical equipment supplied.
E. Finish: One coat of standard rust inhibitive primer.
F. Manufacturer: The Pate Company, Roof Products and Systems (RPS), Roof Products, Inc., Thybar Corporation, or equal.

PART 3 EXECUTION

3.01 APPLICATION

A. Access doors: Provide for cleaning and inspection before and after automatic dampers, fire dampers, and elsewhere as indicated. Size shall be sufficient to perform intended service.
B. Fire, smoke, and combination fire/smoke dampers:
   1. Install in strict accordance with manufacturer's installation instructions.
   2. Provide where indicated, where ducts pass through fire rated components, and where required by authorities having jurisdiction.
   3. Install complete with sleeve, mounting collars, retaining angles, and duct access doors.
   4. Provide label on ceiling or adjacent to damper mounted on duct where duct is exposed, identifying damper location.
   5. Where duct is internally lined provide exterior duct wrap as specified from point of penetration to a point 12” (300 mm) away from penetration.
   6. Where duct is insulated externally, duct wrap shall terminate at point of penetration.

C. Backdraft dampers: Install where indicated and in discharge of each exhaust fan except where motor-operated dampers are shown or specified.
D. Manual balancing dampers:
    1. Install in branch ducts of supply, return low-pressure ductwork.
    2. Install as far upstream from inlet or outlet as possible.

E. Duct flexible connections:
    1. Install for connections of ductwork to equipment casing, including air handling units, fans and fan coils, where fan is not isolated from equipment casing.
    2. Installed width shall be not less than 4" (100 mm).

F. Flexible duct:
    1. Maximum length shall be not greater than 5'-0" (1500 mm), unless otherwise indicated.
    2. Connections shall be accomplished with collars, clamps, and sealer on inside of duct.
    3. Do not install flexible ductwork where ductwork is exposed to view.
    4. Install flexible duct in fully extended manner with no kinks and no more than equivalent of two 90º bends.

G. Prefabricated roof curbs: Install in accordance with manufacturer's recommendations and roofing system manufacturer.
H. Prefabricated roof rails: Install in accordance with manufacturer's recommendations.

END OF SECTION

SECTION 23 34 00 – FANS

PART 1 GENERAL

1.01 SECTION INCLUDES

A. Centrifugal square inline fans.

1.02 INFORMATIONAL SUBMITTALS

A. Product Data:
1. Catalog data showing selection and options.
2. Manufacturer's Installation Instructions.

B. Shop Drawings:
1. Dimension drawings.
2. Fan curves.
3. Sound ratings.
4. Material of construction.
5. Weights.
6. Tag numbers.
7. Vibration isolation.
8. Motor data as specified.

1.03 CLOSEOUT SUBMITTALS

A. Operation and maintenance data.

1.04 QUALITY ASSURANCE

A. Insofar as practicable, provide fans of same manufacturer throughout.

B. Test fans as complete units in accordance with applicable test code of AMCA. Fans shall be certified by AMCA.

C. Conform to AMCA Bulletins regarding construction and testing. Fans shall bear AMCA certified rating seal.

D. Fabrication and installation shall be in accordance with SMACNA and manufacturer's recommendations.

E. Industrial Ventilation, 25th Edition, American Conference of Governmental Industrial Hygienists.

1.05 JOB CONDITIONS

A. Do not operate fans for any purpose, temporary or permanent, until ductwork is cleaned, filters are in place, and bearings are lubricated.

PART 2 PRODUCTS

2.01 ACCEPTABLE MANUFACTURERS

A. Loren Cook.

B. Greenheck.

C. Twin Cities Fan and Blower.

D. Aerovent.

E. Hartzell.

F. New York Blower.

2.02 DESIGN REQUIREMENTS

A. Provide fans with variable pitch V-belt drives for 15 hp and smaller and fixed drives for 20 hp and larger. Provide variable pitch drive for purposes of initial system balancing on 20 hp and larger fans. Provide fixed pitch drives for final system balancing. V-belt drives shall be designed for 150% of motor rating.

B. Fans shall be statically and dynamically balanced and shall operate without objectionable noise or vibration. Variable speed fans shall be statically and dynamically balanced for entire range of speed operation.

C. Where fan drives are exposed, provide guards in accordance with applicable code requirements. Provision shall be made so tachometer may be used to verify fan speed without removing guard assembly.

D. Fan size, fan class, wheel type, inlet type, capacity, arrangement, operating characteristics, and other special requirements shall be as scheduled.

E. Fans shall be Class 1, unless otherwise indicated.

F. Equivalent fan selections shall not increase motor horsepower, increase noise level, increase tip speed by more than 10%, or increase inlet air velocity by more than 20%, from that specified.

2.03 FINISHES

A. Application: All, unless specified or scheduled otherwise.

B. Aluminum components: None.

C. Interior concealed steel components: Galvanized.

D. Exterior or interior exposed to air stream: Polyester powder coat, 1.5 to 3 mils thickness, Loren Cook “Lorenized,” Greenheck “Permatector,” or equal.

E. Epoxy powder coat:

1. Applications: As scheduled.
2. Aluminum components: None.
3. Steel components: Epoxy powder coat.
4. Thickness: 2 to 3.5 mils.
5. Provide UV-resistant coating for outdoor fans.

F. Phenolic:
1. Applications: As scheduled.
2. Type: Phenolic epoxy powder or polyester resin.
3. Thickness: 2 to 4 mils.
4. Provide UV resistant coating for outdoor fans. Fad resistant high-performance polyester finish coat may be provided instead of UV-resistant coating.

G. Color: Manufacturer's standard as selected by Engineer.

2.04 SIDEWALL EXHAUST FANS

A. Performance: As scheduled.

B. Construction:
1. Arrangement: Upblast or down blast, as scheduled.
2. Housing: Heavy-gage spun aluminum.
3. Wheel: Centrifugal, backward inclined aluminum.

C. Drive: Direct-drive.
1. Regreasable bearings in a cast housing rated at 200,000 hours average life.

D. Accessories:
1. Unit-mounted disconnect switch.
2. Factory wall collar.
3. Hinged base.
4. Gravity damper.
5. Bird screen.
6. Lifting lugs.
7. Drive assembly vibration isolators.
8. Fan speed controller for direct drive units.

E. Manufacturer: Loren Cook ACRU, or equal by Greenheck or Twin Cities Fan and Blower.

2.05 INLINE CENTRIFUGAL FANS

A. Performance: As scheduled.

B. Construction:
1. Housing: Galvanized steel housing with Lorenized or phenolic finish.
2. Wheel: Aluminum.
3. Drive: Belt.
4. Bearings: Regreasable bearings in a cast housing rated at 200,000 hours average life.
5. Accessories:
   a. Unit mounted disconnect switch.
   b. Belt guard.

c. Motor cover for belt drive units.
d. Vibration isolators.
e. Flex duct connector.

PART 3 EXECUTION

3.01 INSTALLATION – GENERAL

A. Install units in accordance with manufacturer's installation instructions.

B. Provide sheaves as necessary for final air balancing.

C. Furnish and install miscellaneous hangers, steel, and supports to adequately support unit.

D. Construct sheet metal transition fittings as required to connect ductwork and equipment in accordance with requirements of Section 23 31 00. Provide flexible connections at fan inlet and outlet.

E. Arrangement of components shall provide easy access to items requiring periodic maintenance, including, but not limited to belts, filters, and grease fittings.

F. Repair marred or scratched surfaces with manufacturer's touch-up paint.

G. Where fan speed controller is provided, mount to fan housing. Use controller for balancing of direct drive fans.

3.02 INSTALLATION – ROOF MOUNTED FANS

A. Mount on factory-fabricated curbs flashed and counter flashed into roof to prevent leakage.

B. Roof-mounted utility vent sets shall be mounted on rails above roof surface and provided with weather enclosures.

C. Mount drip pans below inducted roof openings.

END OF SECTION

1) Chad M. Finn
2) Paul M. Breuer

SECTION 23 37 00 – AIR OUTLETS AND INLETS

PART 1 GENERAL

1.01 SECTION INCLUDES

A. Diffusers, registers, and grilles:
   1. Supply grilles and registers.
   2. Return, exhaust, and transfer grilles and registers.
   3. Industrial supply grilles.

B. HVAC intake and relief hoods:
   1. Louvered penthouses.
   2. Gravity ventilators.

1.02 INFORMATIONAL SUBMITTALS

A. Product Data:
   1. Catalog data showing selection and options.
   2. Manufacturer's installation Instructions.

B. Shop Drawings:
   1. Dimension drawings.
   2. Schedules.
   3. Airflow capacities.
   4. Sound ratings.
   5. Material of construction.
   6. Finishes.
   7. Tag numbers.

1.03 CLOSEOUT SUBMITTALS

A. Operation and maintenance data.

1.04 QUALITY ASSURANCE

A. Wherever possible, provide product of same manufacturer throughout.

B. Grilles, registers, and diffusers shall be rated in accordance with ANSI/ASHRAE 70 (latest edition) Method of Testing for Rating the Performance of Air Outlets and Inlets.

1.05 PROJECT CONDITIONS

A. Review requirements of outlets with regards to size, finish, and type of mounting prior to submitting Shop Drawings and schedules of outlets.

B. Check location of outlets and make necessary adjustments in position to conform to architectural features, symmetry, and lighting arrangement.

PART 2 PRODUCTS

2.01 ACCEPTABLE MANUFACTURERS

A. Diffusers, registers, and grilles:
   1. Tuttle & Bailey.
   2. Titus.
   3. Price Industries.
   4. Krueger.
   5. Trane.
   6. MetalAire.
   7. Nailor Industries.

B. HVAC gravity ventilators:
   1. Loren Cook.
   2. Greenheck.
   3. Ruskin.
   4. Twin City Fan and Blower.

2.02 DIFFUSERS, REGISTERS, AND GRILLES

A. As scheduled on Drawings.

2.03 HVAC INTAKE AND RELIEF HOODS

A. Gravity ventilators:
   1. Size and performance: As scheduled on Drawings.
   2. Construction:
      a. 16 gage removable spun aluminum hood.
      b. Rigid aluminum support structure.
      c. Welded aluminum base and curb cap.
      d. Spun aluminum baffle with rolled reinforced bead.
   3. Accessories:
      a. Aluminum expanded metal bird screen.
      b. Factory-fabricated roof curb.
      c. Integral backdraft damper ring.
   4. Manufacturer: Loren Cook PR.

PART 3 EXECUTION

3.01 INSTALLATION – DIFFUSERS, REGISTERS, AND GRILLES

A. Coordinate with other Work including architectural work, ceiling layout, and duct and duct accessories to interface installation of diffusers, register, and grilles properly with other work.

B. Install in location indicated on Drawings.

C. Install in accordance with manufacturer's printed instructions.

D. At each drop or takeoff to individual diffusers, registers, or grilles, locate accessible splitter damper or extractor plus separate accessible volume damper independent of volume dampers integral with diffuser, register, or grille.

E. Adjust diffuser, register, or grille air pattern to provide draft-less uniform air distribution.

F. Blank off unused portions of diffusers and grilles.

G. For duct-mounted grilles or registers, provide transition between ductwork and inlet.

H. Support grilles and diffusers independently of ceiling hardware.

I. Mount with blades arranged to limit visibility through diffuser, register, or grille.

J. In finished spaces, paint inside of duct with flat black paint to reduce visibility.

3.02 INSTALLATION – HVAC INTAKE AND RELIEF HOODS

A. Install units as shown on Drawings, and according to manufacturer's installation instructions.

B. Mount HVAC intake and relief hoods on factory-fabricated curbs flashed and counterflashed into roof to prevent leakage.

C. Secure curb to steel decks with pop rivets or welding.

D. Set curbs with top level. Provide canted curbs as required to compensate for roof pitch.

E. Seal to ensure permanent water-tight installation.

F. Secure hoods to curbs with nonferrous sheet metal fasteners.

3.03 FIELD QUALITY CONTROL

A. Test and operate installed outlets and inlets to demonstrate compliance with Specifications.

3.04 AIR OUTLET AND INLET SCHEDULE

A. See Schedule on Drawings.

END OF SECTION

SECTION 23 73 00 – CENTRAL STATION AIR HANDLING UNITS

PART 1 GENERAL

1.01 SECTION INCLUDES

A. Indoor dedicated outside air handling unit.

1.02 INFORMATIONAL SUBMITTALS

A. Product Data:
   1. Catalog data showing selection and options.
   2. Manufacturer's Installation Instructions.
   3. Fan curves showing cfm, static pressure and rpm, brake horsepower for operating range of 10% above and below design condition.
   4. Manufacturer's operation and maintenance data.

B. Shop Drawings:
   1. Dimension drawings.
   2. Fan curves.
   3. Sound ratings.
   4. Material of construction.
   5. Weights.
   6. Tag numbers.
   7. Vibration isolation.
   8. Motor data as specified in Division 26.

C. Electrical schematics including field wiring connections.
D. Control point schematic and complete written sequence of operation.

1.03 QUALITY ASSURANCE

A. Energy efficiency: Meet or exceed ASHRAE 90.1.
B. Indoor environmental quality:
   1. Ventilation: Meet or exceed ASHRAE 62 and all published addenda.
   2. Filtration: Meet or exceed ASHRAE 52.
   3. Thermal Comfort: Meet or exceed ASHRAE 55.
   4. Maintain positive pressure within building.

C. Provide fans bearing AMCA certified rating seal.
D. Materials shall meet requirements of NFPA 90A and 90B.
E. Comply with AMCA standards for testing and rating fans, and testing louvers, dampers, and shutters.
F. Comply with SMACNA duct construction standards for air handling units.

1.04 JOB CONDITIONS

A. Do not operate fans for any purpose, temporary or permanent, until ductwork is clean, filters are in place, and bearings are lubricated.

1.05 COORDINATION

A. Coordinate with other work, including ductwork, floor construction, roof construction, wiring, controls, and piping to interface installation of air handling units with other work.

1.06 WARRANTY

A. Unit warranty: 24 months.

PART 2 PRODUCTS

2.01 DESIGN REQUIREMENTS

A. DOAS units shall be factory assembled and tested. Units shall include insulated steel cabinet, total plate heat exchanger, split DX cooling coil, electric pre-heat, electric reheat, fan and motor assembly, filter rack, and integral controls.
B. Configure units as indicated on Drawings and as scheduled.
C. Air handling unit total static pressure shall include static pressure loss of casing and components furnished within unit.
D. Motor furnished with fan shall not operate into motor service factor. Drive efficiency shall be considered in motor selection according to manufacturer's published recommendation, or in accordance with AMCA Publication 203, Appendix L.
E. Fans shall be statically and dynamically balanced and shall operate without objectionable noise or vibration throughout entire range of fan speed.
F. Design air handling unit to meet requirements of ASHRAE 62.1.
G. Equivalent fan selections shall not increase motor horsepower, increase noise level, increase tip speed by more than 10%, or increase inlet or outlet air velocity by more than 20%, from that of unit specified.

2.02 ACCEPTABLE MANUFACTURERS

A. Indoor units:
   1. Oxygen 8.
   2. Daikin.
   3. Klimor.
   4. Alternate manufacturers based on prior approval.

2.03 EQUIPMENT

A. Commercial heat pump:

Product Type and Size	Efficiency Performance
Air-source < 65 MBtu/h	12.0 SEER or more 7.7 HSPF or more
Air-source 65 - 135 Mbtu/h	10.1 EER or more 10.4 IPLV or more 3.2 COP or more
Air-source 136 - 240 Mbtu/h	9.3 EER or more 9.5 IPLV or more 3.1 COP or more
Water-source 65 - 135 Mbtu/h	12.8 EER or more 4.5 COP or more

Cooling Efficiency	Heating Efficiency
SEER 12.0	HSPF 7.0
COP 3.5	COP 4.0

2.04 CABINET

A. Cabinet shall be nominal 1" (25 mm) double wall panel with R6.5 thermal insulation. Cabinet exterior shall be 22-gauge pre-painted steel that meets or exceeds 650-hour salt spray test based on ASTM B117. Liners and other stell components shall be galvanized steel. All seams shall be sealed to provide airtight casing.
B. Doors shall be nominal 1" (25 mm) double wall panel with same construction as cabinet. Doors shall be fitted with hinges and odor handles. Doors shall have one lackable handle as standard.
C. Unit will be designed for service and maintenance on bottom side only to allow for a compact installation.
D. All dampers shall have extruded heavy gauge 6063 aluminum frame that includes jamb seals. Blades shall be airfoil shaped extruded aluminum and include rubber blade seals. Linkage shall be installed in frame outside of airstream.
E. All dampers shall include factory mounted, wired and tested actuators. Dampers shall be modulating, or two-position as required. Provide spring return dampers for outdoor air connections.
F. Finish:
    1. Indoor unit: Unpainted, galvanized steel.
    2. Outdoor units: Finish steel with enamel primer followed by exterior application of enamel. *Color as selected by Engineer after award of Contract.*

G. Drain pans:
    1. Fabricate from single piece of *galvanized* *stainless* steel with welded corners.
    2. Provide under cooling coils and entire fan section.
    3. Insulate casing drain pans with minimum of 1/2" (13 mm) formed in place insulation.
    4. Slope in 2 directions. Drain pan shall drain dry to meet requirements of ASHRAE 62.1
    5. *Unit casings for heating only units do not need to be furnished with drain pans.*

2.05 FAN

A. Fans shall be mixed flow plenum type with direct drive motor. Fan and motor assembly shall be factory mounted and balanced. Fans will be capable of operating in ambient temperatures of up to 40°C.
B. Fans motors shall be permanent magnet, synchronous motor type with integral digital motor controller. Fan bearings shall be serviceable type with an L-10 life of 40,000 hours. Fan motors will be UL approved.
C. All fans shall be equipped with integral airflow monitoring system connected to unit controller.
D. Provide means to easily remove fan-motor assembly for service through standard doors.
E. Fans should be designed such that all service can be performed in field, including replacement of bearings.
F. Fan motor drives shall be 208/60/3 and be UL approved. Fans will be protected by UL approved motor protection circuit breaker.

2.06 FILTERS

A. Unit shall include 2" (50 mm) filter rack for outdoor air and return air paths upstream of energy recovery exchanger. Filters shall be accessed through hinged filter access door. Supply one set of MERV 13 pleated filters for outdoor air stream and one set of MERV8 for return air stream. All filters must be UL approved.
B. Provide factory mounted pressure sensors to measure filter pressure drop across filters. Pressure drop shall be digital feedback to controller for utilization in control and alarm sequencing. Unit controller shall monitor filter pressure level and report when filter changes are required.

2.07 ENERGY RECOVERY DEVICE

A. Where indicated, units shall include plate type counter flow heat exchanger fabricated with polymer membrane and aluminum casing. Maximum pressure differential shall be 7.2" w.c. Maximum leakage between airstreams shall be 0.5% of nominal airflow.
B. Unit shall include bypass dampers with modulating actuators. Unit controller shall operate bypass dampers to maximize heat transfer without frosting and bypass heat exchanger during economizer mode. Energy recovery device shall be installed over stainless-steel double sloped condensate pan.
C. Energy recovery device shall be installed over stainless-steel double sloped condensate pan.

2.08 ELECTRIC HEATING COIL

A. Provide open coil electric heaters of size, capacity and performance shown in equipment schedules.
B. All duct heaters shall be tested and certified to UL and CSA.
C. Frame to be corrosion-resistant and made of galvanized steel.
D. Coils shall be made of high-grade Nickel-Chrome alloy and shall be insulated from frame by means of non-rotating ceramic bushings.
E. Heater to come with door mounted disconnect switch and air proving switch
F. SCR control is time proportioning type that modulates heater and supplies exact amount of power to match demand. Input signal will be 0-10V.
G. Heaters shall be equipped with a fail-safe automatic reset disc-type thermal cut-out located in top frame component above heating element.
H. Duct heaters shall be non-sensitive to air flow direction and interchangeable for horizontal or vertical ducts without impairing safety.

2.09 DX HEAT PUMP COIL

A. Where indicated, unit shall include AHRI 410 tested fin tube type DX coil for use with R-410A. Fins shall be aluminum with minimum thickness of 0.006". Tubes shall be minimum 3/8" OD, minimum 0.014" tube wall seamless copper tube mechanically expanded into fins. Coil shall have interlaced circuits to match remote condensing unit when required. Coil casings shall be galvanized steel. Coils shall include external drain and vent connections. Coil shall be mounted in a rack over a stainless-steel double sloped condensate pan. Coil shall be shipped with nitrogen holding charge and tested to 650 psi.
B. When VRV integration is used, AHU integration controller (EKEQ) must be factory mounted and wired to EKEXV expansion valve kit.
C. Liquid and Gas thermistors are to be mounted to coil and wired to EKEQ kit in factory.

D. EKEXV expansion valve kit will be mounted, and connections will be brazed to coil. Liquid and Gas lines to be capped at outside of AHU. Coil and EKEXV kit must be tested to 650 psi, and then nitrogen charged for shipment to site.

2.10 HOT GAS REHEAT COIL

A. Where indicated, unit shall include AHRI 410 tested fin tube type DX coil for use with R-410A. Fins shall be aluminum with a minimum thickness of 0.006". Tubes shall be 3/8" OD, minimum 0.014" tube wall seamless copper tube mechanically expanded into fins. Coil shall have interlaced circuits to match remote condensing unit when required. Coil casings shall be galvanized steel. Coils shall include external drain and vent connections. Coil shall be mounted in a rack over a stainless-steel double sloped condensate pan. Coil shall be shipped with nitrogen holding charge and tested to 650 psi.
B. When VRV integration is used, AHU integration controller (EKEQ) must be factory mounted and wired to EKEXV expansion valve kit.
C. Liquid and Gas thermistors are to be mounted to coil and wired to EKEQ kit in factory.
D. EKEXV expansion valve kit will be mounted, and connections will be brazed to coil. Liquid and Gas lines to be capped at outside of AHU. Coil and EKEXV kit must be tested to 650 psi, and then nitrogen charged for shipment to site.

2.11 CONTROLS

A. Unit shall include an integrated microprocessor-based unit controller. Controls shall be located in integral control's cabinet. All unit controls shall operate off a transformer from main power supply for single point power connection. All internal controls and sensors shall be factory prewired and tested.
B. Include with each unit touch pad type human interface that allows monitoring and control of all unit functions. Human interface shall communicate with unit controller by hardwire connection. Human interface shall be unit mounted.
C. Control system will regulate temperatures, airflows and other functions as required. Unit controller shall be pre-programmed with factory tested software for all possible functions.
D. Controller shall provide the following, refer to sequence of operation for specific unit control sequences;
    1. Control of fans correcting for both changes in total static pressure and air density in both VAV and constant airflow applications.
    2. Fan performance monitoring.
    3. Ventilation airflow monitoring and control.
    4. Airflow density correction for winter and summer conditions.
    5. Energy recovery optimization including operation of bypass damper.
    6. Supplemental heating and cooling when included.
    7. Frost protection.
    8. Monitoring alarms, faults and maintenance points including filter changeout.
    9. Time and date schedules.
    10. Humidity control.
    11. Data logging and trending.

E. Include wireless capability that will allow client to access remotely via internal wi-fi network.
F. If non factory controls are proposed as an option, a factory witness test is required to show integration and functionality.

G. Controller shall be BACnet IP and BTL certified and include Modbus communication. Communication shall include monitoring, control, alarms, faults and maintenance information.
H. Provide factory installed and tested contactors, overloads, fusing, starters motor speed controllers for supply and exhaust. Include all necessary control transformers.
I. Provide unit mounted non-fused disconnect switch with single point power connection.
J. Supply all necessary temperature and pressure sensors complete with plug in wiring harnesses for proper option of unit.
K. When VRV integration is used, AHU integration controller (EKEQ) must be factory mounted and wired to EKEXV expansion valve kit.
L. Liquid and Gas thermistors are to be mounted to coil and wired to EKEQ kit in factory.

2.12 PLASTIC COMPONENTS

A. All plastic components that are in airstream, must be of a UL94 rated material.
B. If gasketing is used to join unit sections together, gasketing.

PART 3 EXECUTION

3.01 SITE ENVIRONMENTAL PROCEDURES

A. Commissioning: Project will have selected building systems commissioned.
B. Resource management; energy efficiency: Verify equipment is properly installed, connected, and adjusted. Verify that equipment is operating as specified.

3.02 INSTALLATION

A. Install air handling units in accordance with manufacturer's installation instructions and per project seismic requirements.
B. Filter section shall be accessible for filter replacement.
C. Suspended units: Provide vibration isolating hanger rods and additional steel for support from building structure. Include supplemental steel bracing per project seismic requirements.
D. Install coils to be easily removable.
E. Extend insulated condensate drain piping from drip pan to floor drain.
F. Provide trap in condensate drain line. Depth of trap shall be equal to fan static pressure plus 3" (75 mm).
G. Provide positive equipment ground for air handling unit components.

3.03 TESTING

A. Upon completion of installation of unit, engage factory authorized service technician to start-up and operate equipment to demonstrate capability and compliance with Specifications.
B. Where required, field correct malfunctioning units. Retest to demonstrate compliance.
C. Except as otherwise indicated, test air handling unit in accordance with ARI Standard 410.

END OF SECTION

SECTION 23 81 00 – DECENTRALIZED UNITARY HVAC EQUIPMENT

PART 1 GENERAL

1.01 SECTION INCLUDES

A. Mini split system air conditioners.

1.02 SUBMITTALS

A. Submit following information as indicated:

Item	Description	Purpose	Time of Submittal (maximum calendar days after notice of award unless noted otherwise)	Submit To
SHOP DRAWINGS				
1.	Provide physical dimensions, description of materials and finishes, general construction.	R	30	E
2.	Provide proper identification, capacities, ratings, weights, and fan curves.	R	30	E
PRODUCT DATA				
1.	Product data including manufacturer's specifications, technical data for performance, construction, and fabrication. Product data shall identify options being provided.	R	30	E
2.	Description of maintenance required weekly, monthly, quarterly, semi-annually, and annually shall be included along with type of lubrication recommended.	R	30	E
3.	Warranty data for all equipment and materials.	R	30	E
TESTING AND CERTIFICATES				
1.		R	30	E

AE – Architect / Design Professional E – Engineer FIO – For Information Only
O – Owner OFR - Owner's Field Representative R – Review T – Testing

1.03 QUALITY ASSURANCE

A. Regulatory requirements:
   1. Conform to requirements of UL and applicable codes.
   2. Conform to requirements of NFPA Standard 90A.

B. Test and rate as follows: Mini-split air conditioners and heat pumps to AHRI Standard 210/240.

1.04 WARRANTY

A. Manufacturer shall guarantee units for period of 1 year after final acceptance by Owner.
B. Warranty shall include cost of parts and labor for any and all calls service company has to make to repair malfunctioning piece of equipment provided by manufacturer except for normal maintenance.

PART 2 PRODUCTS

2.01 DESIGN CRITERIA

A. Units shall be furnished complete with fans, motors, coils, drain pans, filters, integral vibration isolation, and control systems as specified and as scheduled.
B. Units shall be suitable for use intended.
C. Units shall have configuration as scheduled.

2.02 MINI-SPLIT SYSTEM AIR CONDITIONERS/HEAT PUMP

A. Performance: As scheduled on Drawings.
B. Unit shall be completely factory-built, tested, piped, and internally wired.
C. Indoor fan coil unit:
    1. Type: Wall-mounted.
        a. Casing:
            1) ABS plastic or steel.
            2) Color: White.
            3) Filter access: Front.
            4) Wall mounted on factory-furnished pre-drilled mounting plate.
        b. Fan: Multiple double inlet direct drive with single multiple speed motor. Fan shall be statically and dynamically balanced Filter: removable washable type.
        c. Motors: Permanently lubricated ball bearings with current and thermal overload protection.
        d. Filter: removable washable type.
        e. Vane: Provide motorized horizontal vane to automatically direct air flow in both horizontal and downward direction for uniform air distribution
        f. Coil:
            1) Seamless copper tube expanded into aluminum fins.
            2) Provide drain pan under evaporated coil. Pipe to floor drain.
            3) Provide condensate pump.

D. Outdoor air-cooled condenser/heat pump:
    1. Cabinet:
        a. Steel with fused acrylic or polyester powder coating.
        b. Color: White.
        c. Provide mounting feet welded to base of casing.
        d. Provide fan grill.
    2. Compressor:
        a. Type: Inverter-driven rotary.
        b. Refrigerant: R-410A.
    3. Condenser coil:
        a. Seamless copper tube expanded into aluminum fins.
        b. Provide expansion valve or other refrigerant control device.

c. Refrigerant line sets:
    1) Provide refrigerant line sets between indoor unit and outdoor unit.
    2) ACR-type copper B280 tubing insulated with elastomeric insulation.
    3) Insulation: 1" (25 mm) thick; minimum thermal conductivity of 0.27 Btu-inch/hour per sq ft/°F, and meet flame spread index or less than 25 and smoke development index of less than 50 in accordance with ASTM E84.
d. Provide wind baffle or controls to allow for operation to 0°F ambient air temperature.
e. Provide complete with protective controls, expansion valves, service valves, high refrigerant pressure switch, accumulator and crankcase heater or other means of to vaporize refrigerant during off periods.
f. Provide heat pump with reversing valve.

E. Electrical: Provide power supply to indoor unit through combination control cable and power supply cable provided by manufacturer. Provide separate disconnect at indoor unit as shown on Drawings.

F. Controls:
1. Provide complete control system to operate indoor unit and outdoor unit.
2. System shall have automatic restart and self-diagnostic ability.
3. As a minimum, provide:
    a. Monitor return air temperature.
    b. Indoor coil temperature.
    c. Supplemental heat control.
4. Control system shall have ability to interface with remote thermostat either via wired connection of wireless connection.
5. Thermostat:
    a. Provide thermostat controller to operate units as specified.
    b. As a minimum, thermostat shall perform the following functions:
        1) Run and stop operation.
        2) Operation mode selection.
        3) Cooling or heating temperature set point.
        4) Fan speed setting.
        5) Separate heating and cooling set points with system changeover.
        6) Ability to schedule operation of unit.
        7) LCD.

G. Manufacturer: Mitsubishi Electric, Daikin, LG, Sanyo, Carrier, Lennox, York, or equal.

PART 3 EXECUTION

3.01 INSTALLATION

A. Install in accordance with manufacturer's instructions.

B. Wiring between units and remote devices shall be in accordance with requirements of Division 26.

END OF SECTION

SECTION 23 82 39 – UNIT HEATERS

PART 1 GENERAL

1.01 SECTION INCLUDES

A. Corrosion-resistant electric unit heaters.

1.02 INFORMATIONAL SUBMITTALS

A. Product Data:
   1. Catalog data showing selection and options.
   2. Manufacturer's Installation Instructions.
   3. Manufacturer's operation and maintenance data.

B. Shop Drawings:
   1. Dimensions.
   2. Capacities.
   3. Materials of construction.
   4. Ratings.
   5. Weights.
   6. Wiring diagrams.
   7. Tag numbers.

1.03 QUALITY ASSURANCE

A. Terminal heat transfer units shall be products of manufacturer regularly engaged in production of such units and issuing complete catalog data on such product. Throughout Project, use products of same manufacturer to greatest extent possible.

B. Regulatory requirements:
   1. Coils shall be ARI certified.
   2. Units shall be UL listed for intended service.
   3. Explosionproof units shall be Factor Mutual (FM) approved for intended service.

PART 2 PRODUCTS

2.01 CORROSION-RESISTANT ELECTRIC UNIT HEATERS

A. Designation on Drawings: UH-E.

B. Arrangement: Horizontal.

C. Cabinet: Minimum 16-gage 304 stainless steel.

D. Fan: Aluminum blades with corrosion-resistant coating, statically and dynamically balanced with OSHA-approved guard.

E. Louvers: Adjustable.

F. Coil: Stainless steel fin tube.

G. Motor: Totally enclosed, permanently lubricated with thermal overload protection.

H. Electrical and controls:

1. Refer to schedule on Drawings for electrical requirements.
2. NEMA 4X enclosure.
3. Single-point electrical connection.
4. Unit-mounted disconnect switch.
5. Control voltage transformer, as required.
6. Unit-mounted thermostat.
7. Automatic reset thermal overload protection.
8. Fan delay relay.

I. Accessories: Mounting bracket.

J. Manufacturer: Qmark, Indeeco, Ruffneck.

PART 3 EXECUTION

3.01 INSTALLATION – GENERAL

A. Install in accordance with manufacturer's instructions.

B. Electrical service shall be installed in accordance with Division 26.

C. Level or pitch units and elements to manufacturer's required tolerance; shim.

D. Hang units from building construction. Do not hang from piping.

E. Support units with rod-type hanger anchored to building as shown on Drawings. Refer to equipment hanging detail for additional seismic restraint requirements.

F. Protect units with protective covers during balance of construction.

G. Coordinate with other trades to assure correct recess size for recessed units.

3.02 ADJUSTING AND CLEANING

A. Comb out damaged fins where bent or crushed, before covering elements with enclosure.

B. Clean dust and debris from each unit as it is installed.

C. Touch-up finish on each cabinet and component after final adjustments are made.

D. Replace all filters before final acceptance.

E. Replace coils which have excessively damaged fins, and replace enclosures and accessories which are damaged beyond restoration to acceptable condition.

3.03 FIELD QUALITY CONTROL

A. Repair or replace equipment to eliminate leaks, following purging and tightness testing of piping, and retest by specified method to demonstrate proper performance.

B. Flush system before opening stop valve to hydrostatically test units.

END OF SECTION

SECTION 26 00 00 - ELECTRICAL WORK, GENERAL

PART 1 - GENERAL

1.1 THE REQUIREMENT

A. The Contractor shall provide electrical work, complete and operable, in accordance with the Contract Documents.

B. The provisions of this Section apply to all sections in Division 26, except as indicated otherwise.

C. The Work of this Section is required for operation of electrically-driven equipment provided under specifications in other Divisions. The Contractor's attention is directed to the requirement for proper coordination of the Work of this Section with the Work of equipment specifications, and the Work of instrumentation sections.

D. Concrete, excavation, backfill, and steel reinforcement required for encasement, installation, or construction of the Work of the various sections of Division 26 is included as a part of the Work under the respective sections, including duct banks, manholes, handholes, equipment housekeeping pads, and light pole bases.

E. The Contractor shall coordinate with the serving utility, Wrangell Light & Power, as necessary for all work to be done in modification of the existing electrical service. All required utility fees shall be paid for by the Contractor.

1.2 REFERENCE STANDARDS

A. The WORK of this Section and all sections in Division 26 shall comply with the following, as applicable:

NEC (NFPA 70)	National Electrical Code
NETA	International Electrical Testing Association
NEMA 250	Enclosure for Electrical Equipment (1000 Volts Maximum)

B. Electrical equipment shall be listed by and shall bear the label of Underwriters' Laboratories, Inc. (UL) or other State of Alaska recognized testing laboratory.

C. Installation of electrical equipment and materials shall comply with OSHA Safety and Health Standards, state building standards, and applicable local codes and regulations.

D. Where the requirements of the specifications conflict with UL, NEMA, NFPA, or other applicable standards, the more stringent requirements shall govern.

1.3 SIGNAGE

A. Local Disconnect Switches:
   1. Each local disconnect switch for motors and equipment shall be legibly marked to indicate its purpose, unless the purpose is indicated by the location and arrangement.

B. Warning Signs:
   1. 600 volts nominal, or less. - Entrances to rooms and other guarded locations that contain live parts shall be marked with conspicuous signs prohibiting entry by unqualified persons.

C. Isolating Switches:
   1. Isolating switches not interlocked with an approved circuit interrupting device shall be provided with a sign warning against opening them under load.

1.4 PUBLIC UTILITIES REQUIREMENTS

A. The Public Electrical Utility associated with this project is Wrangell Light & Power. The Contractor shall coordinate all requirements with the Utility.

B. The Contractor shall contact the serving utility and verify compliance with requirements before construction. The Contractor shall coordinate schedules and payments for work by all utilities.

C. Electrical service shall be as indicated and be as required by the serving utility.

D. The Contractor shall verify and provide all service conduits, fittings, grounding devices, and all service wires not provided by the serving utility.

E. The Contractor shall verify with the utility the exact location of each service point and type of service, and shall pay all charges levied by the serving utilities as part of the Work.

1.5 PERMITS AND INSPECTION

A. All electrical permits shall be obtained and inspection fees shall be paid by the Contractor.

B. The Contractor shall pay all line extension, service upgrade, equipment, connection and turn-on service charges required by the utility company.

1.6 CONTRACTOR SUBMITTALS

A. Furnish submittals in accordance with Section 01 33 00 “Submittal Procedure.”

B. Show Drawings: Include the following:
   1. Complete material lists stating manufacturer and brand name of each item or class of material.
   2. Shop Drawings for all grounding WORK not specifically indicated.
   3. Front, side, rear elevations, and top views with dimensional data.
   4. Location of conduit entrances and access plates.
   5. Component data.
   6. Connection diagrams, terminal numbers, internal wiring diagrams, conductor size, and cable numbers.
   7. Method of anchoring, seismic requirements, weight.
   8. Types of materials and finish.
   9. Nameplates.
   10. Temperature limitations, as applicable.
   11. Voltage requirement, phase, and current, as applicable.
   12. Front and rear access requirements.
   13. Test reports.
   14. Grounding requirements.
   15. Catalog cuts of applicable pages of bulletins or brochures for mass produced, non-custom manufactured material. Catalog data sheets shall be stamped to indicate the project name, applicable Section and paragraph; and shall be clearly marked to indicate exact model number, and options being provided.

C. Shop Drawings shall be custom prepared. Drawings or data indicating "optional" or "as required" equipment are not acceptable. Options not proposed shall be crossed out or deleted from Shop Drawings.

D. Materials and Equipment Schedules: The Contractor shall deliver to the Engineer within 30 days of the commencement date in the Notice to Proceed, a complete list of all materials, equipment, apparatus, and fixtures proposed for use. The list shall include type, sizes, names of manufacturers, catalog numbers, and other such information required to identify the items.

E. Owner's Manuals: Complete information in accordance with Section 01 33 00.

F. Record Drawings: The Contractor shall show invert and top elevations and routing of all duct banks and concealed below-grade electrical installations. Record Drawings shall be prepared, be available to the Engineer, and be submitted according to Section 01 33 00.

1.7 AREA DESGINATIONS

A. General:
1. Raceway system enclosures shall comply with Section 26 05 33 “Electrical Raceway Systems.”
2. Electrical Work specifically indicated in sections within any of the Specifications shall comply with those requirements.
3. Electrical Work in above ground indoor non-process areas shall be NEMA 1.
4. Electrical Work in damp or wet locations and process areas shall be NEMA 4X unless otherwise indicated.
5. Electrical Work in below ground facilities and outdoors shall be NEMA 4X unless otherwise indicated.
6. Installations in hazardous locations shall conform strictly to the requirements of the Class, Group, and Division indicated.

B. Material Requirements:
1. NEMA 4X enclosures shall be stainless steel, Type 304 or 316.

1.8 TESTS

A. The Contractor shall be responsible for factory and field tests required by specifications in Division 26 and by the ENGINEER or authority having jurisdiction. The Contractor shall furnish necessary testing equipment and pay costs of tests, including all replacement parts and labor, due to damage resulting from damaged equipment or from testing and correction of faulty installation.

B. Where test reports are indicated, proof of design test reports for mass-produced equipment shall be submitted with the Shop Drawings, and factory performance test reports for custom-manufactured equipment shall be submitted and be approved prior to shipment. Field test reports shall be submitted for review prior to Substantial Completion.

C. Equipment or material which fails a test shall be removed and replaced.

D. Cable Testing: Cables and conductors shall be tested in accordance with Section 26 05 19 “Wires and Cables.”

E. Test Ground Fault Interrupter (GFI) receptacles and circuit breakers for proper operation by methods sanctioned by the receptacle manufacturer.

F. A functional test and check of all electrical components is required prior to performing subsystem testing and commissioning. Compartments and equipment shall be cleaned as required by other provisions of these Specifications before commencement of functional testing. Functional testing shall comprise:
   1. Visual and physical check of cables, circuit breakers, transformers and connections associated with each item of new and modified equipment.
   2. Circuit breakers that have adjustable time or pick-up settings for ground current, instantaneous overcurrent, short-time overcurrent, or long-time overcurrent, shall be field-adjusted by a representative of the circuit breaker manufacturer. Setting shall be tabulated and proven for each circuit breaker in its installed position. Test results shall be certified by the person performing the tests and be transmitted to the Engineer.

G. Complete ground testing of grounding electrodes per requirements prior to operating the equipment.

H. Subsystem testing shall occur after the proper operation of alarm and status contacts has been demonstrated or otherwise accepted by the Engineer and after process control devices have been adjusted as accurately as possible. It is intended that the Contractor will adjust limit switches and level switches to their operating points prior to testing and will set pressure switches, flow switches, and timing relays as dictated by operating results.

I. After initial settings have been completed, each subsystem shall be operated in the manual mode and it shall be demonstrated that operation is in compliance with the Contract Documents. Once the manual mode of operation has been proven, automatic operation shall be demonstrated to verify such items as proper operation of valves, proper speed control, etc.

1.9 DEMOLITION AND RELATED WORK

A. The Contractor shall perform electrical demolition Work as indicated on the electrical drawings and in parts of this Specification Section. The Contractor is cautioned that demolition Work may also be indicated on non-electrical drawings. Coordinate electrical de-energization, disconnection, and removal with all trades and the overall sequence of construction.

B. Electrical requirements associated with removed equipment shall be:
   1. Remove power, control and signal wiring as indicated.
   2. Remove all abandoned exposed raceways.
   3. Encased conduits shall be cut flush to the floor and be grouted.
   4. Remove remote mounted starters, disconnect switches, circuit breakers, sensors, and transmitters.
   5. Remove panels, switchboards, transfer switch, etc.
   6. Remove remote mounted status lights and switches where indicated on the electrical drawings, and blank off openings in existing panels with field-fabricated stainless steel plates. Plates shall be attached with stainless steel finish screws.
   7. Remove control panels, concrete bases and posts for panels.
   8. Remove pump cords, level sensors, level switches.

C. Where new lighting and receptacles are installed, old lighting, receptacles, switches, wiring, and conduits shall be removed.

D. Raceways to be reused or extended shall be terminated in a new junction box. The junction box shall have a NEMA rating in accordance with the area in which it is located and shall be sized as required.

E. Materials and equipment not indicated to be removed and returned to the Owner shall, upon removal, become the Contractor's property and shall be disposed of off-site.

F. Material and equipment indicated to be relocated or reused shall be removed and relocated, and reinstalled with care to prevent damage thereto.

G. Materials indicated to be returned to the Owner shall be placed in boxes with the contents clearly marked and be stored at a location determined by the Engineer.

H. Where MCCs or panelboards are indicated to have circuits removed and reconnected, the MCC shall have a new engraved phenolic nameplate worded as indicated, and the panelboard schedule shall be modified to indicate the revised circuits. Pencil or magic marker markings directly on the MCC or panelboard breaker are not permitted.

1.10 CONSTRUCTION SEQUENCING

A. Continuance of facility operation during demolition and construction is critical at this facility. Therefore, the CONTRACTOR shall carefully examine all work to be done in, on, or adjacent to existing equipment. Work shall be scheduled, subject to the Owner's approval, to minimize required process or equipment shutdown time. The Contractor shall submit a written request including sequence and duration of activities to be performed during plant shutdown.

B. Temporary power and communications between existing facilities may be required. Temporary systems shall be in place and staged for switchover prior to disconnection of any active circuits.

C. All switching, safety tagging, etc., required for process or equipment shutdown or to isolate existing equipment shall be performed by the Contractor. In no case shall the Contractor begin any work in, on, or adjacent to existing equipment without written authorization by the plant supervisor and the Engineer. The Contractor shall remove the lock within 4 hours upon request of the Owner, in an emergency, and if the equipment is operable.

D. The Contractor shall make all modifications or alterations to existing electrical facilities required to successfully install and integrate the new electrical equipment as indicated on the electrical drawings. Modifications to existing equipment, panels, or cabinets shall be made in a professional manner with all coatings repaired to match existing. The Contractor is responsible for ensuring all panels and equipment are UL-listed. The costs for modifications (including UL listing) to existing electrical facilities required for a complete and operating system shall be included in the Contractor's original Bid amount and no additional payment for this Work will be authorized.

E. Extreme caution shall be exercised by the Contractor in digging trenches in order not to damage existing underground utilities. Cost of repairs of damages caused during construction shall be the Contractor's responsibility without any additional compensation from the Owner.

F. The Contractor shall be responsible for identifying available existing circuit breakers in lighting panels for the intended use as required by the Drawings. The Contractor shall also be responsible for field-verifying the available space in panelboards to integrate new circuit breakers. Costs for this Work shall be included in the Contractor's original Bid amount.

G. The Contractor is advised to visit the Site before submitting a Bid to better acquaint itself with the Work of this Contract. Lack of knowledge will not be accepted as a reason for granting extra compensation to perform the Work.

1.11 INSTALLATION OF NEW EQUIPMENT

A. The Contractor will install and terminate the new switchboards, motor starters control panels, wireways, cables, and instruments, etc. in accordance with the agreed schedule. The Contractor shall provide a list, daily, of the points that are ready for service as they are connected, calibrated, and tested. The Contractor shall only connect to equipment that is new or is out of service.

B. The recommended construction sequence is as follows:
   a. Prove temporary power and communication provisions.
   b. Remove all demolition items and make good all surfaces before applying appropriate surface finish and paint.
   c. Install new switchboards, motor starters, control panels and instruments.
   d. Install new raceways between switchboards, motor starters, instruments, and new control panel.
   e. Install all new wiring as specified.
   f. Complete wiring modifications to existing equipment.

C. Allowable down time requirements: The Contractor shall minimize the amount of time a facility is out of service. All outages shall be scheduled with the Owner and Engineer a minimum of two (2) days prior to outage. Scheduled outages shall last no longer than two (2) hours.

D. The Owner shall take beneficial occupancy of each facility as the Work is signed off.

PART 2 - PRODUCTS

2.1 GENERAL

A. Equipment and materials shall be new, shall be listed by UL, and shall bear the UL label where UL requirements apply. Equipment and materials shall be the products of experienced and reputable manufacturers in the industry. Similar items in the WORK shall be products of the same manufacturer. Equipment and materials shall be of industrial grade standard of construction.

B. W here a NEMA enclosure type is indicated in a non-hazardous location, the Contractor shall utilize that type of enclosure, despite the fact that certain modifications, such as cutouts for control devices, may negate the NEMA rating.

C. On devices indicated to display dates, the year shall be displayed as 4 digits.

2.2 MOUNTING HARDWARE

A. Miscellaneous Hardware:
   1. Nuts, bolts, and washers shall be stainless steel when used with PVC-Coated raceway and boxes or stainless-steel enclosures. Hot-dipped galvanized nuts, bolts and washers may be used with galvanized rigid conduit (GRC) and enclosures that are not constructed of stainless steel.
   2. Threaded rods for trapeze supports shall be continuous-threaded, stainless steel, 3/8-inch diameter minimum, when used with PVC-coated raceway and boxes. Hot-dipped galvanized hardware may be used with GRC.
   3. Strut for mounting of raceways and equipment shall be galvanized or stainless steel as required by the area classification. Where contact with concrete or dissimilar metals may cause galvanic corrosion, suitable non-metallic insulators shall be utilized to prevent such corrosion. Strut shall be as manufactured by Unistrut, B-Line, or equal.
   4. Anchors for attaching equipment to concrete walls, floors and ceilings shall be stainless steel expansion anchors, such as "Rawl-Bolt," "Rawl-Stud" or "Lok-Bolt" as manufactured by Rawl; similar by Star, or equal. Wood plugs shall not be used.

2.3 ELECTRICAL IDENTIFICATION

A. Nameplates: Nameplates shall be fabricated from white-letter, black-face laminated plastic engraving stock, Formica type ES-1, or equal. Each shall be fastened securely, using fasteners of brass, cadmium-plated steel, or stainless steel, screwed into inserts or tapped holes, as required. Engraved characters shall be block style, with no characters smaller than 1/8-inch in height.

B. Conductor and Equipment Identification: Conductor and equipment identification devices shall be heat-shrink plastic tubing with machine printing. Lettering shall read from left to right and shall face toward the front of the panel.

PART 3 - EXECUTION

3.1 GENERAL

A. Incidentals: The Contractor shall provide all materials and incidentals required for a complete and operable system, even if not required explicitly by the Specifications or the Drawings. Typical incidentals are terminal lugs not furnished with vendor-supplied equipment, compression connectors for cables, splices, junction and terminal boxes, and control wiring required by vendor-furnished equipment to connect with other equipment indicated in the Contract Documents.

B. Field Control of Location and Arrangement: The Drawings diagrammatically indicate the desired location and arrangement of outlets, conduit runs, equipment, and other items. Exact locations shall be determined by the Contractor in the field, based on the physical size and arrangement of equipment, finished elevations, and other obstructions. Locations on the Drawings, however, shall be followed as closely as possible.
   1. Where raceway development drawings, or "home runs," are shown, the Contractor shall route the raceways in accordance with the indicated installation requirements.
   2. Conduit and equipment shall be installed in such a manner as to avoid all obstructions and to preserve headroom and keep openings and passageways clear. Lighting fixtures, switches, convenience outlets, and similar items shall be located within finished rooms as indicated. Where the Drawings do not indicate exact locations, the Engineer shall determine such locations. If equipment is installed without instruction

and must be moved, it shall be moved without additional cost to the Owner. Lighting fixture locations shall be adjusted slightly to avoid obstructions and to minimize shadows.

3. Wherever raceways and wiring for lighting and receptacles are not indicated, it shall be the Contractor's responsibility to provide all lighting and receptacle-related conduits and wiring as required, based on the actual installed fixture layout and the circuit designations as indicated. Wiring shall be #12 AWG minimum, and conduits shall be 3/4-inch minimum. Where circuits are combined in the same raceway, the Contractor shall de-rate conductor ampacities in accordance with NEC requirements.

C. Workmanship: Materials and equipment shall be installed in strict accordance with printed recommendations of the manufacturer. Installation shall be accomplished by workers skilled in the work. Installation shall be coordinated in the field with other trades to avoid interferences.

D. Protection of Equipment and Materials: The Contractor shall fully protect materials and equipment against damage from any cause. Materials and equipment, both in storage and during construction, shall be covered in such a manner that no finished surfaces will be damaged, marred, or splattered with water, foam, plaster, or paint. Moving parts shall be kept clean and dry. The Contractor shall replace or refinish damaged materials or equipment, including faceplates of panels and switchboard sections, as part of the Work.

E. Incoming utility power equipment shall be provided in conformance with the utility's requirements.

3.2 CORE DRILLING

A. The Contractor shall perform core drilling required for installation of raceways through concrete walls, floors and handholes. Locations of floor penetrations, as may be required, shall be based on field conditions. Verify all exact core drilling locations based on equipment actually furnished, as well as exact field placement. To the extent possible, identify the existence and locations of encased raceways and other piping in existing walls and floors with the Owner prior to any core drilling activities. Damage to any encased conduits, wiring, and piping shall be repaired as part of the Work.

B. All penetrations required to extend raceways through concrete walls, roofs, and floors or masonry walls shall be core drilled.

3.3 EQUIPMENT ANCHORING

A. Floor supported, wall-, or ceiling-hung equipment and conductors shall be anchored in place by methods that will meet seismic requirements in the area where the project is located. Wall-mounted panels that weigh more than 500 pounds, or which are within 18 inches of the floor, shall be provided with fabricated steel (stainless steel in designated areas) support pedestals. If the supported equipment is a panel or cabinet enclosed within removable side plates, it shall match supported equipment in physical appearance and dimensions. Transformers hung from 4-inch stud walls and weighing more than 300 pounds shall have auxiliary floor supports.

B. Anchoring methods and leveling criteria in the printed recommendations of the equipment manufacturers are a part of the Work of this Contract. Such recommendations shall be submitted as Shop Drawings under Section 01 33 00.

C. Panels, raceways, and other equipment shall be anchored and supported for Seismic requirements.

3.4 EQUIPMENT IDENTIFICATION

A. General: Equipment and devices shall be identified as follows:
   1. Nameplates shall be provided for all switchboards, panelboards, MCCs, control and instrumentation panels, starters, switches, and pushbutton stations. In addition to nameplates, control devices shall be equipped with standard collar-type legend plates.
   2. Control devices within enclosures shall be identified as indicated. Identification shall be similar to the subparagraph above.
   3. Equipment names and tag numbers, where indicated on the Drawings, shall be utilized on all nameplates.
   4. The Contractor shall furnish typewritten circuit directories for panelboards; circuit directory shall accurately reflect the equipment connected to each circuit.
   5. Generator transfer switches shall be labeled "Main" and "Generator" with ½" lettering.

3.5 CLEANING

A. Before final acceptance, the electrical Work shall be thoroughly cleaned. Exposed parts shall be thoroughly clean of cement, plaster, and other materials. Oil and grease spots shall be removed with a non-flammable cleaning solvent. Such surfaces shall be carefully wiped and all cracks and corners cleaned out. Touch-up paint shall be applied to scratches on panels and cabinets. Electrical cabinets or enclosures shall be vacuum cleaned.

B. Contractor shall group, coil, and tie wrap all spare cables at the bottom of the Local Control Panels. The wires shall be grouped according to the device, control panel, or MCC section they originate from. Cable groups shall be tagged according to their point of origin.

C. All debris shall be removed from the void below the panels.

3.6 CONTROL PANEL WIRING

A. The Contractor shall ensure all panels are UL-listed upon completion of the Work.

END OF SECTION

SECTION 26 05 05 – ELECTRIC MOTORS

PART 1 - GENERAL

1.1 THE REQUIREMENT

A. General: The Contractor shall provide electric motors, accessories, and appurtenances complete and operable, in conformance with the specifications and the Contract Documents.

B. The provisions of this Section apply to constant torque AC squirrel cage induction motors throughout the Contract Documents, except as indicated otherwise.

C. The Contractor shall assign to the equipment supplier the responsibility to select suitable electric motors for the equipment. The choice of motor manufacturer shall be subject to review by the Engineer. Such review will consider future availability of replacement parts and compatibility with driven equipment.

1.2 CONTRACTOR SUBMITTALS

A. Furnish submittals in accordance with Section 01 33 00.

B. Complete motor data shall be submitted. Motor data shall include.

1. Motor manufacturer.
2. Motor type or model and dimension drawing. Include motor weight.
3. Nominal horsepower.
4. NEMA design.
5. Enclosure.
6. Frame size.
7. Winding insulation class and temperature rise class.
8. Voltage, phase, and frequency ratings.
9. Service factor.
10. Full load current at rated horsepower for application voltage.
11. Full load speed.
12. Torque characteristics.
13. Guaranteed minimum full load efficiency. Also, nominal efficiencies at 1/2 and ¾ Load.
14. Type of thermal protection or overtemperature protection, if included.
15. Wiring diagram for devices such as motor leak detection, temperature, or zero speed switches as applicable.
16. Bearing data. Include recommendation for lubricants of regreasable type bearings.
17. Power factor at 1/2, 3/4 and full load.

PART 2 - PRODUCTS

2.1 DESIGN REQUIREMENTS

A. General: Electric motors shall comply with NEMA MG-1 - Motor and Generator.

B. NEMA Design: Electric motors shall be NEMA Design B unless otherwise indicated. In no case shall starting torque or breakdown torque be less than the value in NEMA MG 1. Motors shall be suitable for the indicated starting method.

C. Insulation: Three phase motors shall be provided with Class F insulation, rated to operate at a maximum ambient temperature of 40 degrees C and at the altitudes where the motors will be installed and operated, without exceeding Class B temperature rise limits stated in NEMA MG 1-12.44. Motors shall be provided with insulation systems to withstand 1600 volt spikes, with dV/dt as defined in NEMA MG 1-31.

D. Motors shall be totally enclosed, fan-cooled (TEFC) with a Service Factor of 1. 15, unless otherwise indicated.

E. Motors in electrical hazardous locations shall be appropriately rated for the type of hazardous location.

2.2 ACCESSORY REQUIREMENT

A. General: Motors shall have split-type cast metal conduit boxes.

B. Lifting Devices: Motors weighing 265 lb (120 Kg) or more shall have suitable lifting eyes for installation and removal.

C. Grounding Lugs: Provide motor grounding lug suitable to terminate ground wire, sized as indicated.

D. Nameplate: Motors shall be fitted with permanent stainless steel nameplates indelibly stamped or engraved with NEMA Standard motor data, in conformance with NEMA MG-1-10.40.

2.3 MOTOR THERMAL PROTECTION

A. Thermostats: Winding thermostats shall be snap action, bi-metallic, temperature- actuated switch. Thermostats shall be provided with one normally closed contact for each phase. The thermostat switch point shall be pre-calibrated by the manufacturer.

2.4 MOTOR BEARINGS

A. Motors shall have bearings designed for 100,000 hours (coupled) L-10 life.

B. Motors that are indirectly coupled and are controlled by VFD's shall have provisions to limit bearing currents. Provisions shall as a minimum be AEGIS SGR Bearing Protection Ring or an approved substitute. Contractor shall submit provisions, including means of installation, for approval.

2.5 MANUFACTURERS

A. U.S. Motors, Reliance Electric, or Engineer approved equivalent.

PART 3 - EXECUTION

3.1 INSTALLATION

A. Motor installation shall be performed in accordance with the motor manufacturer's written recommendations and the written requirements of the manufacturer of the driven equipment.

B. Motors shall be installed as required by the existing field conditions, including coupling and shims.

C. Related electrical Work involving connections, controls, switches, and disconnects shall be performed in accordance with the applicable sections of Division 26.

3.2 FIELD TESTING

A. The CONTRACTOR shall perform the following field tests:

1. Inspect each motor installation for any deviation from rated voltage, phase, frequency, and improper installation.
2. Visually check for proper phase and ground connections. Verify that multi-voltage motors are connected for proper voltage.
3. Check winding and bearing temperature detectors and space heaters for functional operation.
4. Test for proper rotation prior to connection to the driven equipment.
5. Test insulation (megger test) of new and re-used motors in accordance with NEMA MG-1. Test voltage shall be 1000 VAC plus twice the rated voltage of the motor.

END OF SECTION

SECTION 26 05 19 – WIRES AND CABLES

PART 1 - GENERAL

1.1 THE REQUIREMENT

A. The Contractor shall provide wires and cable, complete and operable, in accordance with the Contract Documents.

1.2 CONTRACTOR SUBMITTALS

A. The Contractor shall submit Shop Drawings in accordance with Section 01 33 00, and 26 00 00 “Electrical Work, General.”

PART 2 - PRODUCTS

2.1 GENERAL

A. Conductors, including grounding conductors, shall be copper. Aluminum conductor wire and cable will not be permitted. Insulation shall bear the label of Underwriters' Laboratories, Inc. (UL), the manufacturer's trademark, and identify the type, voltage, and conductor size. All conductors except flexible cords and cables, fixture wires, and conductors that form an integral part of equipment, such as motors and controllers, shall conform to the requirements of Article 310 of the National Electric Code, latest edition, for current carrying capacity. Flexible cords and cables shall conform to Article 400, and fixture wires shall conform to Article 402. Wiring shall have wire markers at each end.

2.2 LOW VOLTAGE WIRE AND CABLE

A. Power and Lighting Wire
   1. Power and lighting wire shall be No. 12 copper AWG minimum size.
   2. Wire rated for 600 volts in duct or conduit for all power shall be:
      a. In above grade interior locations: Class B Type THWN-2
      b. In exterior, underground and below grade installations XHHW-2
   3. Wiring for 600 volt class power and lighting shall be as manufactured by General Cable, Okonite, or Rome Cable.

B. Control Wire
   1. Control wire in duct or conduit shall be the same type as power and lighting wire indicated above.
   2. Control wiring shall be No.14, 19-strand copper AWG.

C. Instrumentation Cable
   1. Instrumentation cable shall be rated at 600 volts.
   2. Individual conductors shall be No. 18 AWG stranded, tinned copper. Insulation shall be color-coded polyethylene: black-red for two-conductor cable, and black-red-white for three-conductor cable.
   3. Instrumentation cables shall be composed of the individual conductors, an aluminum polyester foil shield, a No. 18 AWG stranded, tinned copper drain wire, and a PVC outer jacket with a thickness of 0.048-inches.
   4. Single pair, No. 18 AWG, twisted, shielded cable shall be Belden Part No. 9341, or equal.
   5. Single triad, No. 16 AWG, twisted, shielded cable shall be Belden Part No. 1119A, or equal.

D. Multi-pair Control Cable - Multi-pair control cable shall be 6-pair, 600V, No. 16 AWG, twisted, shielded, direct burial rated Belden Part No. 1040A, or equal.

E. Cat 6 Cable: Cat 6 patch cable shall be 4-pair 24-gauge twisted pair rated to TIA/EIA 568-C.2 Category 6 and UL-listed. The CONTRACTOR shall install RJ-45 connectors as required.

2.3 CABLE TERMINATIONS

A. Compression connectors shall be Burndy "Hi Lug", Thomas & Betts "Sta-Kon," or equal. Threaded connectors shall be split bolt type of high strength copper alloy. Pressure type, twist-on connectors will not be acceptable.

B. Pre- insulated fork tongue lugs shall be Thomas & Betts, Burndy, or equal.

C. General purpose insulating tape shall be Scotch No. 33, Plymouth "Slip-knot," or equal. High temperature tape shall be polyvinyl as manufactured by Plymouth, 3M, or equal.

D. Labels for coding 600-volt wiring shall be heat-shrink plastic tubing type with machine print. Lettering shall read from left to right, and face the front of the panel. Field wires terminating at a Control Panel shall be labeled with the wire number shown on the Control Panel wiring diagrams. The CONTRACTOR shall mark all as-built drawings with wire labels.

PART 3 - EXECUTION

3.1 GENERAL

A. The Contractor shall provide and terminate all power, control, and instrumentation conductors, except where indicated.

3.2 INSTALLATION

A. Conductors for feeders as defined in Article 100 of the NEC shall be sized to prevent a voltage drop exceeding 2 percent at the farthest point of power distribution, and where the maximum total voltage drop on both feeders and branch circuits to the farthest connected load does not exceed 5 percent.

B. Conductors for branch circuits as defined in Article 100 of the NEC, shall be sized to prevent a voltage drop exceeding 3 percent at the farthest connected load or combinations of such loads, and where the maximum total voltage drop on both feeders and branch circuits to the farthest connected load does not exceed 5 percent.

C. Conductors shall not be pulled into raceway until raceway has been cleared of moisture and debris.

D. Pulling tensions on raceway cables shall be within the limits recommended by the cable manufacturer. Wire pulling lubricant, where needed, shall be UL-approved for the cables/wires being pulled.

E. The following wiring shall be run in separate raceways:
1. 24 VDC discrete signal and instrument power supply.
2. 4-20 mA analog signal.
3. All AC circuits.
4. Intrinsically safe circuits.

F. Wire in panels, cabinets, and wireways shall be neatly grouped using nylon tie straps, and shall be fanned out to terminals.

G. Conduit Seals: Conduit penetrating building exterior walls shall be sealed with duct seal at the end of the conduit where the conduit enters the building. Provide cloth rag backing and 1" of duct seal so duct seal can be removed in the future.

3.3 SPLICES AND TERMINATIONS

A. General
1. Wire taps and splices are not to be used unless the Contractor can convince the Engineer that they are essential and the Engineer gives written permission.
2. There shall be no cable splices in underground conduits, manholes or pullboxes.
3. Stranded conductors shall be terminated directly on equipment box lugs, making sure that all conductor strands are confined within the lug. Use forked-tongue lugs where equipment box lugs have not been provided.
4. Excess control and instrumentation wire shall be properly taped and terminated as spares.

B. Control Wire and Cable
1. Control conductors shall be spliced or terminated only on terminal strips in panels or vendor-furnished equipment.
2. In terminal cabinets, junction boxes, motor control centers, and control panels, control wire and spare wire shall be terminated to terminal strips.

C. Instrumentation Wire and Cable
1. Shielded instrumentation cables shall be grounded at one end only, the receiving end (i.e., in the control panel) on a 4-20 mA system.

D. Power Wire and Cable
1. No 120/208-volt, 120/240-volt, and 480/277-volt branch circuit conductors may be spliced without Engineer written permission.

3.4 CABLE IDENTIFICATION

A. General: Wires and cables shall be identified for proper control of circuits and equipment and to reduce maintenance effort.

B. Identification Numbers: The Contractor shall assign to each control and instrumentation wire and cable a unique identification number. Numbers shall be assigned to all conductors having common terminals and shall be shown on "as built" drawings. Identification numbers shall appear within 3 inches of conductor terminals. "Control Conductor" shall be defined as any conductor used for alarm, annunciator, or signal purposes.
1. Multiconductor cable:
    a. Assign a number that shall be attached to the cable at intermediate pull boxes and at stub-up locations beneath freestanding equipment.
    b. Cable number shall form a part of the individual wire number.
    c. Individual control conductors and instrumentation cable shall be identified at pull points as described above.
    d. The instrumentation cable numbers shall incorporate the loop numbers assigned in the Contract Documents.

2. All 120/208-volt system feeder cables and branch circuit conductors shall be color-coded as follows:
   a. Phase A – Black
   b. Phase B – Red
   c. Phase C – Blue
   d. Neutral – White

3. The 120/240-volt system conductors shall be color-coded as follows:
   a. Line 1 – Black
   b. Line 2 – Red
   c. Neutral – White

4. The 480/277-volt system conductors shall be color-coded as follows:
   a. Phase A – Brown
   b. Phase B – Orange
   c. Phase C – Yellow
   d. Neutral – Gray

5. Color-coding tape shall be used where colored insulation is not available.
   a. Branch circuit switch shall be Yellow.
   b. Insulated ground wire shall be Green.
   c. Neutral shall be White.

6. Color coding and phasing shall be consistent throughout the Site, bus bars at panelboards, switchboards, and motor control centers shall be connected Phase A-B-C, top to bottom, or left to right, facing connecting lugs.
7. General purpose AC control cables shall be Red.
8. General purpose DC control cables shall be Blue.
9. Spare cable shall be terminated on terminal screws and shall be identified with a unique number as well as with destination.
10. Terminal strips shall be identified by computer-printable, cloth, self-sticking marker strips attached under the terminal strip.

3.5 TESTING

A. Cable Assembly and Testing: Cable assembly and testing shall comply with applicable requirements of ICEA Publication No. S-68-516 - Ethylene-Propylene-Rubber Insulated Wire and Cable for the Transmission and Distribution of Electrical Energy. Factory test results shall be submitted in accordance with Section 013300 - Contractor Submittals, prior to shipment of cable. The following field tests shall be the minimum requirements:
   1. Power cable rated at 600 volts shall be tested with a 1000-volt megohm meter for insulation resistance between phases and from each phase to a ground using a megohmeter.
   2. Field testing shall be done after cables are installed in the raceways.
   3. Field tests shall be performed by a certified test organization acceptable to the cable manufacturer. Test results shall be submitted to the Engineer for review and acceptance.
   4. Cables showing less than 100 megohm resistance shall be replaced with a new cable or be repaired. Repair methods shall be as recommended by the cable manufacturer and shall be performed by persons certified by the industry.

B. Continuity Test: Control and instrumentation cables shall be tested for continuity, polarity, undesirable ground, and origination. Such tests shall be performed after installation and prior to placing all wires and cables in service.

3.6 DEMONSTRATION

A. Engage a factory-authorized service representative to train Owner's maintenance personnel to adjust, operate, and maintain enclosed controllers.

END OF SECTION

SECTION 26 05 23 – CONTROL-VOLTAGE ELECTRICAL POWER CABLES

PART 1 - GENERAL

1.1 RELATED DOCUMENTS

A. Drawings and general provisions of the Contract, including General and Supplementary Conditions and Division 01 Specification Sections, apply to this Section.

1.2 SUMMARY

A. Section Includes:
   1. Backboards.
   2. Category 6 balanced twisted pair cable.
   3. Low-voltage control cabling.
   4. Control-circuit conductors.
   5. Identification products.

1.3 DEFINITIONS

A. EMI: Electromagnetic interference.

B. Low Voltage: As defined in NFPA 70 for circuits and equipment operating at less than 50 V or for remote-control and signaling power-limited circuits.

C. Plenum: A space forming part of the air distribution system to which one or more air ducts are connected. An air duct is a passageway, other than a plenum, for transporting air to or from heating, ventilating, or air-conditioning equipment.

D. RCDD: Registered Communications Distribution Designer.

1.4 ACTION SUBMITTALS

A. Product Data: For each type of product.

1.5 INFORMATIONAL SUBMITTALS

A. Qualification Data: For testing agency, RCDD, layout technician, installation supervisor, and field inspector.

B. Source quality-control reports.

C. Field quality-control reports.

1.6 QUALITY ASSURANCE

A. Testing Agency Qualifications: Accredited by NETA.
   1. Testing Agency's Field Supervisor: Currently certified by BICSI as an RCDD to supervise on-site testing.

PART 2 - PRODUCTS

2.1 PERFORMANCE REQUIREMENTS

A. Electrical Components, Devices, and Accessories: Listed and labeled as defined in NFPA 70, by a qualified testing agency, and marked for intended location and application.

B. Flame Travel and Smoke Density in Plenums: As determined by testing identical products according to NFPA 262, by a qualified testing agency. Identify products for installation in plenums with appropriate markings of applicable testing agency.
   1. Flame Travel Distance: 60 inches (1520 mm) or less.
   2. Peak Optical Smoke Density: 0.5 or less.
   3. Average Optical Smoke Density: 0.15 or less.

C. Flame Travel and Smoke Density for Riser Cables in Non-Plenum Building Spaces: As determined by testing identical products according to UL 1666.

D. Flame Travel and Smoke Density for Cables in Non-Riser Applications and Non-Plenum Building Spaces: As determined by testing identical products according to UL 1685.

E. RoHS compliant.

2.2 BACKBOARDS

A. Description: Plywood, 3/4 by 48 by 48 inches (19 by 1220 by 1220 mm).

B. Painting: Paint plywood on all sides and edges with flat blue latex paint. Confirm color with the Engineer.

2.3 CATEGORY 6 BALANCED TWISTED PAIR CABLE

A. Description: Four-pair, balanced-twisted pair cable, with internal spline, certified to meet transmission characteristics of Category 6 cable at frequencies up to 250MHz.

B. Standard: Comply with NEMA WC 66/ICEA S-116-732 and TIA-568-C.2 for Category 6 cables.

C. Conductors: 100-ohm, 23 AWG solid copper.

D. Shielding/Screening: Unshielded twisted pairs (UTP).

E. Cable Rating: Plenum.

F. Jacket: Blue thermoplastic.

G. Patch Cords: Factory-made, four-pair cables in 36-inch lengths; terminated with an eight- position modular plug at each end.
   1. Patch cords shall have bend-relief-compliant boots and color-coded icons to ensure performance. Patch cords shall have latch guards to protect against snagging.
   2. Patch cords shall have color-coded boots for circuit identification.

H. Plugs and Plug Assemblies:
   1. Male; eight position; color-coded modular telecommunications connector designed for termination of a single four-pair 100-ohm unshielded or shielded balanced twisted pair cable.
   2. Comply with IEC 60603-7-1, IEC 60603-7-2, IEC 60603-7-3, IEC 60603-7-4, and
      IEC 60603-7.5.
   3. Marked to indicate transmission performance.

I. Jacks and Jack Assemblies:
   1. Female; eight position; modular; fixed telecommunications connector designed for termination of a single four-pair 100-ohm unshielded or shielded balanced twisted pair cable.
   2. Designed to snap-in to a patch panel or faceplate.
   3. Standards:
      a. Category 5e, unshielded balanced twisted pair cable shall comply with IEC 60603- 7-2.
      b. Category 5e, shielded balanced twisted pair cable shall comply with IEC 60603-7- 3.
      c. Category 6, unshielded balanced twisted pair cable shall comply with IEC 60603- 7-4.
      d. Category 6, shielded balanced twisted pair cable shall comply with IEC 60603-7.5.
      e. Category 6a, unshielded balanced twisted pair cable shall comply with IEC 60603- 7-41.
      f. Category 6a, shielded balanced twisted pair cable shall comply with IEC 60603-7.51.
   4. Marked to indicate transmission performance.

J. Faceplate:
   1. Four port, vertical single-gang faceplates designed to mount to single-gang wall boxes.
   2. For use with snap-in jacks accommodating any combination of balanced twisted pair, optical fiber, and coaxial work area cords.
      a. Flush mounting jacks, positioning the cord at a 45-degree angle.

K. Legend:
   1. Machine printed, in the field, using adhesive-tape label.
   2. Snap-in, clear-label covers and machine-printed paper inserts.

2.4 LOW-VOLTAGE CONTROL CABLE

A. Paired Cable: NFPA 70, Type CMG.
   1. One pair, twisted, No. 18 AWG, stranded (19x30) tinned-copper conductors.
   2. PVC insulation.
   3. Shielded.
   4. PVC jacket.
   5. Flame Resistance: Comply with UL 1685.

B. Plenum-Rated, Paired Cable: NFPA 70, Type CMP.
   1. One pair, twisted, No. 18 AWG, stranded (19x30) tinned-copper conductors.
   2. PVC insulation.
   3. Shielded.
   4. PVC jacket.
   5. Flame Resistance: Comply with NFPA 262.

2.5 CONTROL-CIRCUIT CONDUCTORS

A. Class 1 Control Circuits: Stranded copper, Type RHW-2, complying with UL 44 in raceway.

B. Class 2 Control Circuits: Stranded copper, Type RHW-2, complying with UL 44 in raceway.

C. Class 3 Remote-Control and Signal Circuits: Stranded copper, Type RHW-2, complying with UL 44 in raceway.

D. Class 2 Control Circuits and Class 3 Remote-Control and Signal Circuits That Supply Critical Circuits: Circuit Integrity (CI) cable.
   1. Smoke control signaling and control circuits.

2.6 FIRE ALARM WIRE AND CABLE

A. General Wire and Cable Requirements: NRTL listed and labeled as complying with NFPA 70, Article 760.

B. Signaling Line Circuits: Twisted, shielded pair, not less than No. 18 AWG.
   1. Circuit Integrity Cable: Twisted shielded pair, NFPA 70, Article 760, Classification CI, for power-limited fire-alarm signal service Type FPL. NRTL listed and labeled as complying with UL 1424 and UL 2196 for a two-hour rating.

C. Non-Power-Limited Circuits: Solid-copper conductors with 600-V rated, 75 deg C, color-coded insulation, and complying with requirements in UL 2196 for a two-hour rating.
   1. Low-Voltage Circuits: No. 16 AWG, minimum, in pathway.
   2. Line-Voltage Circuits: No. 12 AWG, minimum, in pathway.

2.7 SOURCE QUALITY CONTROL

A. Testing Agency: Engage a qualified testing agency to evaluate cables.

B. Factory test twisted pair cables according to TIA-568-C.2.

C. Cable will be considered defective if it does not pass tests and inspections.

D. Prepare test and inspection reports.

PART 3 - EXECUTION

3.1 EXAMINATION

A. Test cables on receipt at Project site.
   1. Test each pair of twisted pair cable for open and short circuits.

3.2 INSTALLATION OF RACEWAYS AND BOXES

A. Comply with requirements in Section 26 05 33 "Electrical Raceway Systems" for raceway selection and installation requirements for boxes, conduits, and wireways as supplemented or modified in this Section.
   1. Outlet boxes shall be no smaller than 2 inches (50 mm) wide, 3 inches (75 mm) high, and 2-1/2 inches (64 mm) deep.
   2. Outlet boxes for cables shall be no smaller than 4 inches (102 mm) square by 2-1/8 inches (53 mm) deep with extension ring sized to bring edge of ring to within 1/8 inch (3.1 mm) of the finished wall surface.
   3. Flexible metal conduit shall not be used.

B. Comply with TIA-569-D for pull-box sizing and length of conduit and number of bends between pull points.

C. Install manufactured conduit sweeps and long-radius elbows if possible.

D. Raceway Installation in Equipment Rooms:
   1. Position conduit ends adjacent to a corner on backboard if a single piece of plywood is installed, or in the corner of the room if multiple sheets of plywood are installed around perimeter walls of the room.
   2. Install cable trays to route cables if conduits cannot be located in these positions.
   3. Secure conduits to backboard if entering the room from overhead.
   4. Extend conduits 3 inches (75 mm) above finished floor.
   5. Install metal conduits with grounding bushings and connect with grounding conductor to grounding system.

E. Backboards: Install backboards with 96-inch (2440-mm) dimension vertical. Butt adjacent sheets tightly and form smooth gap-free corners and joints.

3.3 INSTALLATION OF CONDUCTORS AND CABLES

A. Comply with NECA 1.

B. General Requirements for Cabling:
   1. Comply with TIA-568-C Series of standards.
   2. Comply with BICSI ITSIMM, Ch. 5, "Copper Structured Cabling Systems."
   3. Terminate all conductors; no cable shall contain unterminated elements. Make terminations only at indicated outlets, terminals, and cross-connect and patch panels.
   4. Cables may not be spliced and shall be continuous from terminal to terminal. Do not splice cable between termination, tap, or junction points.
   5. Cables serving a common system may be grouped in a common raceway. Install network cabling and control wiring and cable in separate raceway from power wiring. Do not group conductors from different systems or different voltages.
   6. Secure and support cables at intervals not exceeding 30 inches (760 mm) and not more than 6 inches (150 mm) from cabinets, boxes, fittings, outlets, racks, frames, and terminals.
   7. Bundle, lace, and train conductors to terminal points without exceeding manufacturer's limitations on bending radii, but not less than radii specified in BICSI ITSIMM, Ch. 5, "Copper Structured Cabling Systems." Install lacing bars and distribution spools.
   8. Do not install bruised, kinked, scored, deformed, or abraded cable. Remove and discard cable if damaged during installation and replace it with new cable.
   9. Cold-Weather Installation: Bring cable to room temperature before dereeling. Do not use heat lamps for heating.
   10. Pulling Cable: Comply with BICSI ITSIMM, Ch. 5, "Copper Structured Cabling Systems." Monitor cable pull tensions.
   11. Support: Do not allow cables to lie on removable ceiling tiles.
   12. Secure: Fasten securely in place with hardware specifically designed and installed so as to not damage cables.
   13. Provide strain relief.
   14. Keep runs short. Allow extra length for connecting to terminals. Do not bend cables in a radius less than 10 times the cable OD. Use sleeves or grommets to protect cables from vibration at points where they pass around sharp corners and through penetrations.
   15. Ground wire shall be copper, and grounding methods shall comply with IEEE C2. Demonstrate ground resistance.

C. Installation of Control-Circuit Conductors:
   1. Install wiring in raceways.
   2. Use insulated spade lugs for wire and cable connection to screw terminals.

3. Comply with requirements specified in Section 26 05 33 "Electrical Raceway Systems."

D. Open-Cable Installation:

1. Install cabling with horizontal and vertical cable guides in telecommunications spaces with terminating hardware and interconnection equipment.
2. Suspend copper cable not in a wireway or pathway a minimum of 8 inches (200 mm) above ceilings by cable supports not more than 30 inches (760 mm).
3. Cable shall not be run through or on structural members or in contact with pipes, ducts, or other potentially damaging items. Do not run cables between structural members and corrugated panels.

E. Separation from EMI Sources:

1. Comply with BICSI TDMM and TIA-569-D recommendations for separating unshielded copper voice and data communications cable from potential EMI sources including electrical power lines and equipment.
2. Separation between open communications cables or cables in nonmetallic raceways and unshielded power conductors and electrical equipment shall be as follows:
   a. Electrical Equipment or Circuit Rating Less Than 2 kVA: A minimum of 5 inches (127 mm).
   b. Electrical Equipment or Circuit Rating between 2 and 5 kVA: A minimum of 12 inches (305 mm).
   c. Electrical Equipment or Circuit Rating More Than 5 kVA: A minimum of 24 inches (600 mm).
3. Separation between communications cables in grounded metallic raceways and unshielded power lines or electrical equipment shall be as follows:
   a. Electrical Equipment or Circuit Rating Less Than 2 kVA: A minimum of 2-1/2 inches (64 mm).
   b. Electrical Equipment or Circuit Rating between 2 and 5 kVA: A minimum of 6 inches (150 mm).
   c. Electrical Equipment or Circuit Rating More Than 5 kVA: A minimum of 12 inches (305 mm).
4. Separation between communications cables in grounded metallic raceways and power lines and electrical equipment located in grounded metallic conduits or enclosures shall be as follows:
   a. Electrical Equipment or Circuit Rating Less Than 2 kVA: No requirement.
   b. Electrical Equipment or Circuit Rating between 2 and 5 kVA: A minimum of 3 inches (75 mm).
   c. Electrical Equipment or Circuit Rating More Than 5 kVA: A minimum of 6 inches (150 mm).
5. Separation between Communications Cables and Electrical Motors and Transformers, 5 kVA or 5 HP and Larger: A minimum of 48 inches (1200 mm).
6. Separation between Communications Cables and Fluorescent Fixtures: A minimum of 5 inches (127 mm).

3.4 CONTROL-CIRCUIT CONDUCTORS

A. Minimum Conductor Sizes:

1. Class 1 remote-control and signal circuits; No. 14 AWG.
2. Class 2 low-energy, remote control, and signal circuits; No. 16 AWG.
3. Class 3 low-energy, remote control, alarm, and signal circuits; No. 12 AWG.

3.5 FIRESTOPPING

A. Comply with requirements in Section 078413 "Penetration Firestopping."

B. Comply with TIA-569-D, Annex A, "Firestopping."

C. Comply with BICSI TDMM, "Firestopping" Chapter.

3.6 GROUNDING

A. For data communication wiring, comply with TIA-607-B and with BICSI TDMM, "Bonding and Grounding (Earthing)" Chapter.

B. For low-voltage control wiring and cabling, comply with requirements in Section 26 05 26 "Grounding."

3.7 IDENTIFICATION

A. Comply with requirements for identification specified in Section 26 05 53 "Identification for Electrical Systems."

B. Identify data and communications system components, wiring, and cabling according to TIA 606-B; label printers shall use label stocks, laminating adhesives, and inks complying with UL 969.

C. Identify each wire on each end and at each terminal with a number-coded identification tag. Each wire shall have a unique tag.

3.8 FIELD QUALITY CONTROL

A. Testing Agency: Owner will engage a qualified testing agency to perform tests and inspections.

B. Testing Agency: Engage a qualified testing agency to perform tests and inspections.

C. Manufacturer's Field Service: Engage a factory-authorized service representative to test and inspect components, assemblies, and equipment installations, including connections.

D. Perform tests and inspections.

E. Tests and Inspections:
   1. Visually inspect cable jacket materials for UL or third-party certification markings. Inspect cabling terminations to confirm color-coding for pin assignments, and inspect cabling connections to confirm compliance with TIA-568-C.1.
   2. Visually inspect cable placement, cable termination, grounding and bonding, equipment and patch cords, and labeling of all components.
   3. Test cabling for direct-current loop resistance, shorts, opens, intermittent faults, and polarity between conductors. Test operation of shorting bars in connection blocks. Test cables after termination, but not after cross-connection.

a. Test instruments shall meet or exceed applicable requirements in TIA-568-C.2. Perform tests with a tester that complies with performance requirements in its "Test Instruments (Normative)" Annex, complying with measurement accuracy specified in its "Measurement Accuracy (Informative)" Annex. Use only test cords and adapters qualified by test equipment manufacturer for channel or link test configuration.

F. Document data for each measurement. Print data for submittals in a summary report that is formatted using Table 10.1 in BICSI TDMM as a guide, or transfer the data from the instrument to the computer, save as text files, print, and submit.

G. End-to-end cabling will be considered defective if it does not pass tests and inspections.

H. Prepare test and inspection reports.

END OF SECTION

SECTION 26 05 26 – GROUNDING

PART 1 - GENERAL

1.1 RELATED DOCUMENTS

A. Drawings and general provisions of the Contract, including General and Supplementary Conditions and Division 01 Specification Sections, apply to this Section.

1.2 SUMMARY

A. Section includes grounding and bonding systems and equipment.

1.3 ACTION SUBMITTALS

A. Product Data: For each type of product indicated.

1.4 INFORMATIONAL SUBMITTALS

A. As-Built Data: Plans showing dimensioned as-built locations of grounding features specified in "Field Quality Control" Article, including the following:
   1. Ground rods.
   2. Ground rings.
   3. Grounding arrangements and connections for separately derived systems.

1.5 QUALITY ASSURANCE

A. Electrical Components, Devices, and Accessories: Listed and labeled as defined in NFPA 70, by a qualified testing agency, and marked for intended location and application.

B. Comply with UL 467 for grounding and bonding materials and equipment.

PART 2 - PRODUCTS

2.1 MANUFACTURERS

A. Manufacturers: Subject to compliance with requirements, available manufacturers offering products that may be incorporated into the Work include, but are not limited to, the following:
   1. Burndy; Part of Hubbell Electrical Systems.
   2. Dossert; AFL Telecommunications LLC.
   3. ERICO International Corporation.
   4. Fushi Copperweld Inc.
   5. Galvan Industries, Inc.; Electrical Products Division, LLC.
   6. Harger Lightning and Grounding.
   7. ILSCO.
   8. O-Z/Gedney; A Brand of the EGS Electrical Group.
   9. Robbins Lightning, Inc.
   10. Siemens Power Transmission & Distribution, Inc.

2.2 CONDUCTORS

A. Insulated Conductors: Copper or tinned-copper wire or cable insulated for 600 V unless otherwise required by applicable Code or authorities having jurisdiction.

B. Bare Copper Conductors:
   1. Solid Conductors: ASTM B 3.
   2. Stranded Conductors: ASTM B 8.

3. Tinned Conductors: ASTM B 33.
4. Bonding Cable: 28 kcmil, 14 strands of No. 17 AWG conductor, 1/4 inch (6 mm) in diameter.
5. Bonding Conductor: No. 4 or No. 6 AWG, stranded conductor.
6. Bonding Jumper: Copper tape, braided conductors terminated with copper ferrules; 1-5/8 inches (41 mm) wide and 1/16 inch (1.6 mm) thick.
7. Tinned Bonding Jumper: Tinned-copper tape, braided conductors terminated with copper ferrules; 1-5/8 inches (41 mm) wide and 1/16 inch (1.6 mm) thick.

C. Grounding Bus: Predrilled rectangular bars of annealed copper, 1/4 by 4 inches (6.3 by 100 mm) in cross section, with 9/32-inch (7.14-mm) holes spaced 1-1/8 inches (28 mm) apart. Stand-off insulators for mounting shall comply with UL 891 for use in switchboards, 600 V and shall be Lexan or PVC, impulse tested at 5000 V.

2.3 CONNECTORS

A. Listed and labeled by an NRTL acceptable to authorities having jurisdiction for applications in which used and for specific types, sizes, and combinations of conductors and other items connected.

B. Bolted Connectors for Conductors and Pipes: Copper or copper alloy.

C. Bus-Bar Connectors: Mechanical type, cast silicon bronze, solderless compression-type wire terminals, and long-barrel, two-bolt connection to ground bus bar.

2.4 GROUNDING ELECTRODES

A. Ground Rods: Copper-clad; 5/8 by 96 inches (16 by 2400 mm).

PART 3 - EXECUTION

3.1 APPLICATIONS

A. Conductors: Install stranded conductors, unless otherwise indicated.

B. Underground Grounding Conductors: Install bare copper conductor.
1. Bury at least 24 inches (600 mm) below grade.

C. Grounding Bus: Install in electrical equipment rooms, in rooms housing service equipment, and elsewhere as indicated.
1. Install bus horizontally, on insulated spacers 2 inches (50 mm) minimum from wall, 6 inches (150 mm) above finished floor unless otherwise indicated.
2. Where indicated on both sides of doorways, route bus up to top of door frame, across top of doorway, and down; connect to horizontal bus.

D. Conductor Terminations and Connections:
1. Pipe and Equipment Grounding Conductor Terminations: Bolted connectors.
2. Underground Connections: Compression connectors.

3.2 EQUIPMENT GROUNDING

A. Install insulated equipment grounding conductors with all feeders and branch circuits.

B. Water Heater: Install a separate insulated equipment grounding conductor to each electric water heater. Bond conductor to heater units, piping, connected equipment, and components.

3.3 INSTALLATION

A. Grounding Conductors: Route along shortest and straightest paths possible unless otherwise indicated or required by Code. Avoid obstructing access or placing conductors where they may be subjected to strain, impact, or damage.

B. Ground Rods: Drive rods until tops are 2 inches (50 mm) below finished floor or final grade unless otherwise indicated.
   1. Interconnect ground rods with grounding electrode conductor below grade and as otherwise indicated. Make connections without exposing steel or damaging coating if any.

C. Bonding Straps and Jumpers: Install in locations accessible for inspection and maintenance except where routed through short lengths of conduit.
   1. Bonding to Equipment Mounted on Vibration Isolation Hangers and Supports: Install bonding so vibration is not transmitted to rigidly mounted equipment.
   2. Use compression connectors for outdoor locations; if a disconnect-type connection is required, use a bolted clamp.
   3. Conduits to Cable Tray: Install bonding from conduits supporting cable from cable tray to the grounding conductor in the cable tray.

D. Grounding and Bonding for Piping:
   1. Metal Water Service Pipe: Install insulated copper grounding conductors, in conduit, from building's main service equipment, or grounding bus, to main metal water service entrances to building. Connect grounding conductors to main metal water service pipes; use a bolted clamp connector or bolt a lug-type connector to a pipe flange by using one of the lug bolts of the flange. Where a dielectric main water fitting is installed, connect grounding conductor on street side of fitting. Bond metal grounding conductor conduit or sleeve to conductor at each end.
   2. Sensors: Use braided-type bonding jumpers to electrically bypass sensors. Connect to pipe with a bolted connector.

E. Ground Ring: Install a grounding conductor, electrically connected to each building structure ground rod, extending around the perimeter of building as indicated.
   1. Bury ground ring not less than 24 inches (600 mm) from building's foundation.

F. Concrete-Encased Grounding Electrode: Fabricate according to NFPA 70; use a minimum of 20 feet (6 m) of bare copper conductor not smaller than 2/0 AWG, or as illustrated in the Drawings.
   1. Bond grounding conductor to reinforcing steel in at least four locations.

3.4 FIELD QUALITY CONTROL

A. Perform tests and inspections.

B. Tests and Inspections:
   1. After installing grounding system but before permanent electrical circuits have been energized, test for compliance with requirements.
   2. Inspect physical and mechanical condition. Verify tightness of accessible, bolted, electrical connections with a calibrated torque wrench according to manufacturer's written instructions.
   3. Test completed grounding system at each location where a maximum ground-resistance level is specified, at service disconnect enclosure grounding terminal.

a. Measure ground resistance no fewer than two full days after last trace of precipitation and without soil being moistened by any means other than natural drainage or seepage and without chemical treatment or other artificial means of reducing natural ground resistance.
b. Perform tests by fall-of-potential method according to IEEE 81.

4. Prepare dimensioned Drawings locating each ground rod and ground-rod assembly, and other grounding electrodes. Identify each by letter in alphabetical order, and key to the record of tests and observations. Include the number of rods driven and their depth at each location, and include observations of weather and other phenomena that may affect test results. Describe measures taken to improve test results.

C. Grounding system will be considered defective if it does not pass tests and inspections.

D. Prepare test and inspection reports.

E. Report measured ground resistances that exceed the following values:
1. Power and Lighting Equipment or System with Capacity of 500 to 1000 kVA: 5 ohms.

F. Excessive Ground Resistance: If resistance to ground exceeds specified values, notify Engineer promptly and include recommendations to reduce ground resistance.

END OF SECTION

SECTION 26 05 29 - HANGERS AND SUPPORTS FOR ELECTRICAL SYSTEMS

PART 1 - GENERAL

1.1 RELATED DOCUMENTS

A. Drawings and general provisions of the Contract, including General and Supplementary Conditions and Division 01 Specification Sections, apply to this Section.

1.2 SUMMARY

A. Section Includes:

1. Steel slotted support systems.
2. Nonmetallic slotted support systems.
3. Conduit and cable support devices.
4. Support for conductors in vertical conduit.
5. Structural steel for fabricated supports and restraints.
6. Mounting, anchoring, and attachment components, including powder-actuated fasteners, mechanical expansion anchors, concrete inserts, clamps, through bolts, toggle bolts, and hanger rods.
7. Fabricated metal equipment support assemblies.

1.3 ACTION SUBMITTALS

A. Product Data: For each type of product.
1. Include construction details, material descriptions, dimensions of individual components and profiles, and finishes for the following:
a. Slotted support systems, hardware, and accessories.
b. Clamps.
c. Hangers.
d. Sockets.
e. Eye nuts.
f. Fasteners.
g. Anchors.
h. Saddles.
i. Brackets.
2. Include rated capacities and furnished specialties and accessories.

B. Shop Drawings: Signed and sealed by a qualified professional engineer. For fabrication and installation details for electrical hangers and support systems.
1. Hangers. Include product data for components.
2. Slotted support systems.
3. Equipment supports.
4. Vibration Isolation Base Details: Detail fabrication including anchorages and attachments to structure and to supported equipment. Include adjustable motor bases, rails, and frames for equipment mounting.

C. Delegated-Design Submittal: For hangers and supports for electrical systems.
1. Include design calculations and details of hangers.
2. Include design calculations for seismic restraints.

1.4 INFORMATIONAL SUBMITTALS

A. Coordination Drawings: Reflected ceiling plan(s) and other details, drawn to scale, on which the following items are shown and coordinated with each other, using input from installers of the items involved:
   1. Suspended ceiling components.
   2. Ductwork, piping, fittings, and supports.
   3. Structural members to which hangers and supports will be attached.
   4. Size and location of initial access modules for acoustical tile.
   5. Items penetrating finished ceiling, including the following:
      a. Luminaires.
      b. Air outlets and inlets.
      c. Speakers.
      d. Sprinklers.
      e. Access panels.
      f. Projectors.

B. Seismic Qualification Data: Certificates, for hangers and supports for electrical equipment and systems, accessories, and components, from manufacturer.
   1. Basis for Certification: Indicate whether withstand certification is based on actual test of assembled components or on calculation.
   2. Dimensioned Outline Drawings of Equipment Unit: Identify center of gravity and locate and describe mounting and anchorage provisions.
   3. Detailed description of equipment anchorage devices on which the certification is based and their installation requirements.

C. Welding certificates.

1.5 QUALITY ASSURANCE

A. Welding Qualifications: Qualify procedures and personnel according to AWS D1.1/D1.1M.

B. Welding Qualifications: Qualify procedures and personnel according to the following:
   1. AWS D1.1/D1.1M.
   2. AWS D1.2/D1.2M.

PART 2 – PRODUCTS

2.1 PERFORMANCE REQUIREMENTS

A. Delegated Design: Engage a qualified professional engineer to design hanger and support system.

B. Seismic Performance: Hangers and supports shall withstand the effects of earthquake motions determined according to ASCE/SEI 7.
   1. The term "withstand" means "the supported equipment and systems will remain in place without separation of any parts when subjected to the seismic forces specified and the supported equipment and systems will be fully operational after the seismic event."
   2. Component Importance Factor: 1.5.

C. Surface-Burning Characteristics: Comply with ASTM E84; testing by a qualified testing agency. Identify products with appropriate markings of applicable testing agency.
   1. Flame Rating: Class 1.
   2. Self-extinguishing according to ASTM D635.

2.2 SUPPORT, ANCHORAGE, AND ATTACHMENT COMPONENTS

A. Steel Slotted Support Systems: Preformed steel channels and angles with minimum 13/32-inch- (10-mm-) diameter holes at a maximum of 8 inches (200 mm) o.c. in at least one surface.

1. Standard: Comply with MFMA-4 factory-fabricated components for field assembly.
2. Material for Channel, Fittings, and Accessories: Galvanized steel.
3. Channel Width: 1-5/8 inches (41.25 mm).
4. Metallic Coatings: Hot-dip galvanized after fabrication and applied according to MFMA- 4.
5. Nonmetallic Coatings: Manufacturer's standard PVC, polyurethane, or polyester coating applied according to MFMA-4.
6. Painted Coatings: Manufacturer's standard painted coating applied according to MFMA- 4.
7. Protect finishes on exposed surfaces from damage by applying a strippable, temporary protective covering before shipping.

B. Nonmetallic Slotted Support Systems: Structural-grade, factory-formed, glass-fiber-resin channels and angles with minimum 13/32-inch- (10-mm-) diameter holes at a maximum of 8 inches (200 mm) o.c., in at least one surface.

1. Standard: Comply with MFMA-4 factory-fabricated components for field assembly.
2. Channel Width: Selected for applicable load criteria.
3. Fittings and Accessories: Products provided by channel and angle manufacturer and designed for use with those items.
4. Fitting and Accessory Materials: Same as those for channels and angles, except metal items may be stainless steel.
5. Rated Strength: Selected to suit applicable load criteria.
6. Protect finishes on exposed surfaces from damage by applying a strippable, temporary protective covering before shipping.

C. Conduit and Cable Support Devices: Steel hangers, clamps, and associated fittings, designed for types and sizes of raceway or cable to be supported.

D. Support for Conductors in Vertical Conduit: Factory-fabricated assembly consisting of threaded body and insulating wedging plug or plugs for nonarmored electrical conductors or cables in riser conduits. Plugs shall have number, size, and shape of conductor gripping pieces as required to suit individual conductors or cables supported. Body shall be made of malleable iron.

E. Structural Steel for Fabricated Supports and Restraints: ASTM A36/A36M steel plates, shapes, and bars; black and galvanized.

F. Mounting, Anchoring, and Attachment Components: Items for fastening electrical items or their supports to building surfaces include the following:

1. Powder-Actuated Fasteners: Threaded-steel stud, for use in hardened portland cement concrete, steel, or wood, with tension, shear, and pullout capacities appropriate for supported loads and building materials where used.
2. Mechanical-Expansion Anchors: Insert-wedge-type, [zinc-coated] [stainless] steel, for use in hardened portland cement concrete, with tension, shear, and pullout capacities appropriate for supported loads and building materials where used.

3. Concrete Inserts: Steel or malleable-iron, slotted support system units are similar to MSS Type 18 units and comply with MFMA-4 or MSS SP-58.
4. Clamps for Attachment to Steel Structural Elements: MSS SP-58 units are suitable for attached structural element.
5. Through Bolts: Structural type, hex head, and high strength. Comply with ASTM F3125/F3125M, Grade A325 (Grade A325M).
6. Toggle Bolts: All steel springhead type.
7. Hanger Rods: Threaded steel.

2.3 FABRICATED METAL EQUIPMENT SUPPORT ASSEMBLIES

A. Description: Welded or bolted structural-steel shapes, shop or field fabricated to fit dimensions of supported equipment.

PART 3 - EXECUTION

3.1 APPLICATION

A. Comply with the following standards for application and installation requirements of hangers and supports, except where requirements on Drawings or in this Section are stricter:
1. NECA 1.
2. NECA 101
3. NECA 102.
4. NECA 105.
5. NECA 111.

B. Comply with requirements for raceways and boxes specified in Section 26 05 33 "Electrical Raceway Systems."

C. Maximum Support Spacing and Minimum Hanger Rod Size for Raceways: Space supports for EMT, IMC, and RMC as required by NFPA 70. Minimum rod size shall be 1/4 inch (6 mm) in diameter.

D. Multiple Raceways or Cables: Install trapeze-type supports fabricated with steel slotted support system, sized so capacity can be increased by at least 25 percent in future without exceeding specified design load limits.
1. Secure raceways and cables to these supports with two-bolt conduit clamps.

E. Spring-steel clamps designed for supporting single conduits without bolts may be used for 1-1/2-inch (38-mm) and smaller raceways serving branch circuits and communication systems above suspended ceilings, and for fastening raceways to trapeze supports.

3.2 SUPPORT INSTALLATION

A. Comply with NECA 1 and NECA 101 for installation requirements except as specified in this article.

B. Raceway Support Methods: In addition to methods described in NECA 1, EMT, IMC and RMC may be supported by openings through structure members, according to NFPA 70.

C. Strength of Support Assemblies: Where not indicated, select sizes of components so strength will be adequate to carry present and future static loads within specified loading limits. Minimum static design load used for strength determination shall be weight of supported components plus 200 lb (90 kg).

D. Mounting and Anchorage of Surface-Mounted Equipment and Components: Anchor and fasten electrical items and their supports to building structural elements by the following methods unless otherwise indicated by code:
   1. To Wood: Fasten with lag screws or through bolts.
   2. To New Concrete: Bolt to concrete inserts.
   3. To Masonry: Approved toggle-type bolts on hollow masonry units and expansion anchor fasteners on solid masonry units.
   4. To Existing Concrete: Expansion anchor fasteners.
   5. Instead of expansion anchors, powder-actuated driven threaded studs provided with lock washers and nuts may be used in existing standard-weight concrete 4 inches (100 mm) thick or greater. Do not use for anchorage to lightweight-aggregate concrete or for slabs less than 4 inches (100 mm) thick.
   6. To Steel: Beam clamps (MSS SP-58, Type 19, 21, 23, 25, or 27), complying with MSS SP-69.
   7. To Light Steel: Sheet metal screws.
   8. Items Mounted on Hollow Walls and Nonstructural Building Surfaces: Mount cabinets, panelboards, disconnect switches, control enclosures, pull and junction boxes,

      transformers, and other devices on slotted-channel racks attached to substrate by means that comply with seismic-restraint strength and anchorage requirements.

E. Drill holes for expansion anchors in concrete at locations and to depths that avoid the need for reinforcing bars.

3.3 INSTALLATION OF FABRICATED METAL SUPPORTS

A. Cut, fit, and place miscellaneous metal supports accurately in location, alignment, and elevation to support and anchor electrical materials and equipment.

B. Field Welding: Comply with AWS D1.1/D1.1M.

3.4 CONCRETE BASES

A. Construct concrete bases of dimensions indicated, but not less than 4 inches larger in both directions than supported unit, and so anchors will be a minimum of 10 bolt diameters from edge of the base.

B. Use 3000-psi, 28-day compressive-strength concrete. Concrete materials, reinforcement, and placement requirements are specified in Section 03 30 00 "Cast-in-Place Concrete."

C. Anchor equipment to concrete base as follows:
   1. Place and secure anchorage devices. Use supported equipment manufacturer's setting drawings, templates, diagrams, instructions, and directions furnished with items to be embedded.
   2. Install anchor bolts to elevations required for proper attachment to supported equipment.
   3. Install anchor bolts according to anchor-bolt manufacturer's written instructions.

3.5 PAINTING

A. Touchup: Clean field welds and abraded areas of shop paint. Paint exposed areas immediately after erecting hangers and supports. Use same materials as used for shop painting. Comply with SSPC-PA 1 requirements for touching up field-painted surfaces.
   1. Apply paint by brush or spray to provide minimum dry film thickness of 2.0 mils.

B. Touchup: Comply with requirements in Section 09 91 23 "Interior Painting" for cleaning and touchup painting of field welds, bolted connections, and abraded areas of shop paint on miscellaneous metal.

C. Galvanized Surfaces: Clean welds, bolted connections, and abraded areas and apply galvanizing-repair paint to comply with ASTM A780.

END OF SECTION

SECTION 26 05 33 – ELECTRICAL RACEWAY SYSTEMS

PART 1 - GENERAL

1.1 RELATED DOCUMENTS

A. Drawings and general provisions of the Contract, including General and Supplementary Conditions and Division 01 Specification Sections, apply to this Section.

1.2 SUMMARY

A. Section Includes:

1. Metal conduits, tubing, and fittings.
2. Nonmental conduits, tubing, and fittings.
3. Metal wireways and auxiliary gutters.
4. Boxes, enclosures, and cabinets.
5. Handholes and boxes for exterior underground cabling.

1.3 DEFINITIONS

A. GRC: Galvanized rigid steel conduit.

B. EMT: Electrical Metallic Tubing.

C. IMT: Intermediate metal conduit.

1.4 SUBMITTALS

A. Action Submittals: Product data for wireways and fittings, hinged-cover enclosures, and cabinets.

PART 2 - PRODUCTS

2.1 METAL CONDUITS, TUBING, AND FITTINGS

A. Manufacturers: Subject to compliance with requirements, available manufacturers offering products that may be incorporated into the Work include, but are not limited to, the following:

1. AFC Cable Systems, Inc.
2. Allied Tube & Conduit.
3. Anamet Electrical, Inc.
4. Electri-Flex Company.
5. O-Z/Gedney.
6. Picoma Industries.
7. Republic Conduit.
8. Robroy Industries.
9. Southwire Company.
10. Thomas & Betts Corporation.
11. Western Tube and Conduit Corporation.
12. Wheatland Tube Company.

B. Listing and Labeling: Metal conduits, tubing, and fittings shall be listed and labeled as defined in NFPA 70, by a qualified testing agency, and marked for intended location and application.

C. GRC: Comply with ANSI C80.1 and UL 6.

D. IMC: Comply with ANSI C80.6 and UL 1242.

E. EMT: Comply with ANSI C80.3 and UL 797.

F. LFMC: Flexible steel conduit with PVC jacket and complying with UL 360.

G. Fittings for Metal Conduit: Comply with NEMA FB 1 and UL 514B.
   1. Fittings for EMT:
      a. Material: Steel.
      b. Type: Setscrew or compression.

H. Joint Compound for IMC or GRC: Approved, as defined in NFPA 70, by authorities having jurisdiction for use in conduit assemblies, and compounded for use to lubricate and protect threaded conduit joints from corrosion and to enhance their conductivity.

2.2 NONMETALLIC CONDUITS, TUBING, AND FITTINGS

A. Manufacturers: Subject to compliance with requirements, available manufacturers offering products that may be incorporated into the Work include, but are not limited to, the following:
   1. AFC Cable Systems, Inc.
   2. Anamet Electrical, Inc.
   3. Arnco Corporation.
   4. CANTEX Inc.
   5. CertainTeed Corporation.
   6. Condux International, Inc.
   7. Electri-Flex Company.
   8. Kraloy.
   9. Lamson & Sessions; Carlon Electrical Products.
   10. Niedax-Kleinhuis USA, Inc.
   11. RACO; Hubbell.
   12. Thomas & Betts Corporation.

B. Listing and Labeling: Nonmetallic conduits, tubing, and fittings shall be listed and labeled as defined in NFPA 70, by a qualified testing agency, and marked for intended location and application.

C. RNC: Type EPC-40-PVC, complying with NEMA TC 2 and UL 651 unless otherwise indicated.

D. LFNC: Comply with UL 1660.

E. Fittings for RNC: Comply with NEMA TC 3; match to conduit or tubing type and material.

F. Fittings for LFNC: Comply with UL 514B.

G. Solvent cements and adhesive primers shall have a VOC content of 510 and 550 g/L or less, respectively, when calculated according to 40 CFR 59, Subpart D (EPA Method 24).

2.3 METAL WIREWAYS AND AUXILIARY GUTTERS

A. Manufacturers: Subject to compliance with requirements, available manufacturers offering products that may be incorporated into the Work include, but are not limited to, the following:

   1. Cooper B-Line, Inc.
   2. Hoffman.

3. Mono-Systems, Inc.
4. Square D.

B. Description: Sheet metal, complying with UL 870 and NEMA 250, Type 1, unless otherwise indicated, and sized according to NFPA 70.
1. Metal wireways installed outdoors shall be listed and labeled as defined in NFPA 70, by a qualified testing agency, and marked for intended location and application.

C. Fittings and Accessories: Include covers, couplings, offsets, elbows, expansion joints, adapters, hold-down straps, end caps, and other fittings to match and mate with wireways as required for complete system.

D. Wireway Covers: Screw-cover type, unless otherwise indicated.

E. Finish: Manufacturer's standard enamel finish.

2.4 BOXES, ENCLOSURES, AND CABINETS

A. Manufacturers: Subject to compliance with requirements, available manufacturers offering products that may be incorporated into the Work include, but are not limited to, the following:
1. Adalet.
2. Cooper Technologies Company; Cooper Crouse-Hinds.
3. EGS/Appleton Electric.
4. Erickson Electrical Equipment Company.
5. FSR Inc.
6. Hoffman.
7. Hubbell Incorporated.
8. Kraloy.
9. Milbank Manufacturing Co.
10. Mono-Systems, Inc.
11. O-Z/Gedney.
12. RACO; Hubbell.
13. Robroy Industries.
14. Spring City Electrical Manufacturing Company.
15. Stahlin Non-Metallic Enclosures.
16. Thomas & Betts Corporation.
17. Wiremold / Legrand.

B. General Requirements for Boxes, Enclosures, and Cabinets: Boxes, enclosures, and cabinets installed in wet locations shall be listed for use in wet locations.

C. Sheet Metal Outlet and Device Boxes: Comply with NEMA OS 1 and UL 514A.

D. Cast- Metal Outlet and Device Boxes: Comply with NEMA FB 1, ferrous alloy, Type FD, with gasketed cover.

E. Small Sheet Metal Pull and Junction Boxes: NEMA OS 1.

F. Cast-Metal Access, Pull, and Junction Boxes: Comply with NEMA FB 1 and UL 1773, galvanized, cast iron with gasketed cover.

G. Box extensions used to accommodate new building finishes shall be of same material as

recessed box.

H. Device Box Dimensions: 4 inches square by 2-1/8 inches deep (100 mm square by 60 mm deep).

I. Hinged- Cover Enclosures: Comply with UL 50 and NEMA 250, Type 1 with continuous-hinge cover with flush latch unless otherwise indicated.
   1. Metal Enclosures: Steel, finished inside and out with manufacturer's standard enamel.
   2. Interior Panels: Steel; all sides finished with manufacturer's standard enamel.

J. Cabinets:
   1. NEMA 250, Type 1 galvanized-steel box with removable interior panel and removable front, finished inside and out with manufacturer's standard enamel.
   2. Metal barriers to separate wiring of different systems and voltage.
   3. Accessory feet where required for freestanding equipment.

2.5 HANDHOLES AND BOXES FOR EXTERIOR UNDERGROUND WIRING

A. General Requirements for Handholes and Boxes:
   1. Boxes and handholes for use in underground systems shall be designed and identified as defined in NFPA 70, for intended location and application.
   2. Boxes installed in wet areas shall be listed and labeled as defined in NFPA 70, by a qualified testing agency, and marked for intended location and application.

B. Polymere-Concrete Handholes and Boxes with Polymer-Concrete Cover: Molded of sand and aggregate, bound together with polymer resin, and reinforced with steel, fiberglass, or a combination of the two.
   1. Manufacturers: Subject to compliance with requirements, available manufacturers offering products that may be incorporated into the Work include, but are not limited to, the following:
      a. Armorcast Products Company.
      b. Carson Industries LLC.
      c. NewBasis.
      d. Oldcastle Precast, Inc.
      e. Quazite: Hubbell Power System, Inc.
      f. Synertech Moulded Products.
   2. Standard: Comply with SCTE 77.
   3. Configuration: Designed for flush burial with open bottom unless otherwise indicated.
   4. Cover: Weatherproof, secured by tamper-resistant locking devices and having structural load rating consistent with enclosure and handhole location.
   5. Cover Finish: Nonskid finish shall have a minimum coefficient of friction of 0.50.
   6. Cover Legend: Molded lettering, “LIGHTING”.
   7. Conduit Entrance Provisions: Conduit-terminating fittings shall mate with entering ducts for secure, fixed installation in enclosure wall.

2.6 SOURCE QUALITY CONTROL FOR UNDERGROUND ENCLOSURES

A. Handhole and Pull-Box Prototype Test: Test prototypes of handholes and boxes for compliance with SCTE 77. Strength tests shall be for specified tier ratings of products supplied.
   1. Tests of materials shall be performed by an independent testing agency.

PART 3 - EXECUTION

3.1 RACEWAY APPLICATION

A. Outdoors: Apply raceway products as specified below unless otherwise indicated:
   1. Exposed Conduit: GRC or IMC.
   2. Underground Conduit: RNC, Type EPC-40-PVC, direct buried.
   3. Connection to Vibrating Equipment (Including Transformers and Hydraulic, Pneumatic, Electric Solenoid, or Motor-Driven Equipment): LFNC.
   4. Boxes and Enclosures, Aboveground: NEMA 250, Type 3R Type 4.

B. Indoors: Apply raceway products as specified below unless otherwise indicated:
   1. Exposed, Not Subject to Physical Damage: EMT.
   2. Exposed, Not Subject to Severe Physical Damage: EMT.
   3. Connection to Vibrating Equipment (Including Transformers and Hydraulic, Pneumatic, Electric Solenoid, or Motor-Driven Equipment): LFMC.
   4. Damp or Wet Locations: GRC or IMC.
   5. Boxes and Enclosures: NEMA 250, Type 1.

C. Minimum Raceway Size: 1/2-inch (16-mm) trade size.

D. Raceway Fittings: Compatible with raceways and suitable for use and location.
   1. Rigid and Intermediate Steel Conduit: Use threaded rigid steel conduit fittings unless otherwise indicated. Comply with NEMA FB 2.10.
   2. EMT: Use setscrew or compression, steel fittings. Comply with NEMA FB 2.10.
   3. Flexible Conduit: Use only fittings listed for use with flexible conduit. Comply with NEMA FB 2.20.

3.2 INSTALLATION

A. Comply with NECA 1 and NECA 101 for installation requirements except where requirements on Drawings or in this article are stricter.

B. Complete raceway installation before starting conductor installation.

C. Comply with requirements in Section 26 05 29 "Hangers and Supports for Electrical Systems" for hangers and supports.

D. Arrange stub-ups so curved portions of bends are not visible above finished slab.

E. Install no more than the equivalent of three 90-degree bends in any conduit run except for control wiring conduits, for which fewer bends are allowed. Support within 12 inches (300 mm) of changes in direction.

F. Support conduit within 12 inches (300 mm)of enclosures to which attached.

G. Raceways Embedded in Slabs:
   1. Run conduit larger than 1-inch (27-mm) trade size, parallel or at right angles to main reinforcement. Where at right angles to reinforcement, place conduit close to slab support. Secure raceways to reinforcement at maximum 10-foot (3-m)intervals.
   2. Arrange raceways to cross building expansion joints at right angles with expansion fittings.
   3. Arrange raceways to keep a minimum of 1 inch (25 mm) of concrete cover in all directions.

4. Do not embed threadless fittings in concrete unless specifically approved by Engineer for each specific location.

H. Threaded Conduit Joints, Exposed to Wet, Damp, Corrosive, or Outdoor Conditions: Apply listed compound to threads of raceway and fittings before making up joints. Follow compound manufacturer's written instructions.

I. Terminations at Locations Subject to Moisture or Vibration: Use insulating bushings to protect conductors including conductors smaller than No. 4 AWG.

J. Terminate threaded conduits into threaded hubs or with locknuts on inside and outside of boxes or cabinets. Install bushings on conduits up to 1-1/4-inch (35mm) trade size and insulated throat metal bushings on 1-1/2-inch (41-mm) trade size and larger conduits terminated with locknuts. Install insulated throat metal grounding bushings on service conduits.

K. Install raceways square to the enclosure and terminate at enclosures with locknuts. Install locknuts hand tight plus 1/4 turn more.

L. Do not rely on locknuts to penetrate nonconductive coatings on enclosures. Remove coatings in the locknut area prior to assembling conduit to enclosure to assure a continuous ground path.

M. Cut conduit perpendicular to the length. For conduits 2-inch (53-mm) trade size and larger, use roll cutter or a guide to make cut straight and perpendicular to the length.

N. Install pull wires in empty raceways. Use polypropylene or monofilament plastic line with not less than 200-lb (90-kg) tensile strength. Leave at least 12 inches (300 mm) of slack at each end of pull wire. Cap underground raceways designated as spare above grade alongside raceways in use.

O. Comply with manufacturer's written instructions for solvent welding RNC and fittings.

P. Flexible Conduit Connections: Comply with NEMA RV 3. Use a maximum of 36 inches (915 mm) of flexible conduit for equipment subject to vibration, noise transmission, or movement; and for transformers and motors.

Q. Mount boxes at heights indicated on Drawings.

R. Fasten junction and pull boxes to or support from building structure. Do not support boxes by conduits.

3.3 INSTALLATION OF UNDERGROUND CONDUIT

A. Direct-Buried Conduit:
1. Excavate trench bottom to provide firm and uniform support for conduit.
2. After installing conduit, backfill and compact. Start at tie-in point, and work toward end of conduit run, leaving conduit at end of run free to move with expansion and contraction as temperature changes during this process. Firmly hand tamp backfill around conduit to provide maximum supporting strength. After placing controlled backfill to within 12 inches (300 mm) of finished grade, make final conduit connection at end of run and complete backfilling with normal compaction.

3. Install manufactured rigid steel conduit elbows for stub-ups at poles and equipment and at building entrances through floor.
   a. Couple steel conduits to ducts with adapters designed for this purpose.
   b. For stub-ups at equipment mounted on outdoor concrete bases and where conduits penetrate building foundations, extend steel conduit horizontally a minimum of

      60 inches (1500 mm) from edge of foundation or equipment base. Install insulated grounding bushings on terminations at equipment.

4. Underground Warning Tape: Comply with requirements in Section 26 05 53 "Identification for Electrical Systems."

3.4 INSTALLATION OF UNDERGROUND HANDHOLES AND BOXES

A. Install handholes and boxes level and plumb and with orientation and depth coordinated with connecting conduits to minimize bends and deflections required for proper entrances.

B. Unless otherwise indicated, support units on a level bed of crushed stone or gravel, graded from 1/2-inch (12.5-mm) sieve to No. 4 (4.75-mm) sieve and compacted to same density as adjacent undisturbed earth.

C. Elevation: In paved areas, set so cover surface will be flush with finished grade. Set covers of other enclosures 1 inch (25 mm) above finished grade.

3.5 PROTECTION

A. Protect coatings, finishes, and cabinets from damage and deterioration.
   1. Repair damage to galvanized finishes with zinc-rich paint recommended by manufacturer.
   2. Repair damage to paint finishes with matching touchup coating recommended by manufacturer.

END OF SECTION

26 05 36 – CABLE TRAYS FOR ELECTRICAL SYSTEMS

PART 1 - GENERAL

1.1 RELATED DOCUMENTS

A. Drawings and general provisions of the Contract, including General and Supplementary Conditions and Division 01 Specification Sections, apply to this Section.

1.2 SUMMARY

A. Section Includes:

1. Fiberglass cable trays.

1.3 SUBMITTALS

A. Action Submittals: Product data for each type of product.

1. Include data indicating dimensions and finishes for each type of cable tray indicated.

PART 2 - PRODUCTS

2.1 GENERAL REQUIREMENTS FOR CABLE TRAYS

A. Cable Trays and Accessories: Identified as defined in NFPA 70 and marked for intended location, application, and grounding.
1. Source Limitations: Obtain cable trays and components from single manufacturer.

B. Sizes and Configurations: See the Drawings for specific requirements for types, materials, sizes, and configurations.

C. Structural Performance: See articles on individual cable tray types for specific values for the following parameters:
1. Uniform Load Distribution: Capable of supporting a uniformly distributed load on the indicated support span when supported as a simple span and tested according to NEMA VE 1.
2. Concentrated Load: A load applied at midpoint of span and centerline of tray.
3. Load and Safety Factors: Applicable to both side rails and rung capacities.

2.2 FIBERGLASS CABLE TRAYS

A. Manufacturers: Subject to compliance with requirements, available manufacturers offering products that may be incorporated into the Work include, but are not limited to, the following:
1. Allied Tube & Conduit.
2. Cooper B-Line, Inc.
3. Enduro Systems, Inc.
4. Mono-Systems, Inc.
5. MP Husky.

B. Description:

1. Configuration: Two longitudinal members with rounded edges and smooth surfaces, complying with NEMA FG 1.
2. Materials: Straight section structural elements; side rails, rungs and splice plates shall be pultruded from glass-fiber-reinforced vinyl ester resin, complying with NEMA FG 1 and UL 568.
3. Fasteners: Fiberglass-encapsulated, ASTM F 593 and ASTM F 594 stainless steel, Type 316. Design fasteners so that no metal is visible when fully assembled and tightened. Fastener encapsulation shall not be damaged when torqued to manufacturer's recommended value.
4. Minimum Usable Load Depth: 3 inches (75 mm) according to NEMA FG 1.
5. Straight Section Lengths: 10 feet (3 m) or 20 feet (6 m).
6. Width: As indicated on Drawings.
7. Class Designation: Comply with NEMA VE 1.
8. Temperature Rating: Reduce the load rating of tray exposed to temperatures above 75 deg F (24 deg C) according to Table 4-3, "Working Loads," in NEMA FG 1.
9. Fitting Minimum Radius: 12 inches (300 mm).
10. Splicing Assemblies: Minimum four nuts and bolts per plate. Splice plates shall be furnished with straight sections and fittings.
11. Splicing Assembly Capacity: Splices located within support span shall not diminish rated loading capacity of cable tray.

2.3 CABLE TRAY ACCESSORIES

A. Fittings: Tees, crosses, risers, elbows, and other fittings as indicated, of same materials and finishes as cable tray.

B. Barrier Strips: Same materials and finishes as for cable tray.

C. Cable tray supports and connectors, including bonding jumpers, as recommended by cable tray manufacturer.

2.4 SOURCE QUALITY CONTROL

A. Testing: Test and inspect cable trays according to NEMA FG 1.

PART 3 - EXECUTION

3.1 CABLE TRAY INSTALLATION

A. Install cable trays according to NEMA FG 1.

B. Install cable trays as a complete system, including fasteners, hold-down clips, support systems, barrier strips, adjustable horizontal and vertical splice plates, elbows, reducers, tees, crosses, cable dropouts, adapters, and bonding.

C. Install cable trays so that the tray is accessible for cable installation and all splices are accessible for inspection and adjustment.

D. Remove burrs and sharp edges from cable trays.

E. Fasten cable tray supports to building structure.

F. Design fasteners and supports to carry cable tray, the cables, and a concentrated load of 200 lb (90 kg). Comply with requirements in Section 16073 "Hangers and Supports for Electrical Systems."

G. Place supports with maximum spans eight feet and provide clearances shown on Drawings. Install intermediate supports when cable weight exceeds the load-carrying capacity of the tray rungs.

H. Construct supports from channel members, threaded rods, and other appurtenances furnished by cable tray manufacturer. Arrange supports in trapeze or wall-bracket form as required by application.

I. Locate and install supports according to NEMA FG 1. Do not install more than one cable tray splice between supports.

J. Make connections to equipment with flanged fittings fastened to cable trays and to equipment. Support cable trays independent of fittings. Do not carry weight of cable trays on equipment enclosure.

K. Install expansion connectors where cable trays cross building expansion joints and in cable tray runs that exceed dimensions recommended in NEMA FG 1. Space connectors and set gaps according to applicable standard.

L. Make changes in direction and elevation using manufacturer's recommended fittings.

M. Make cable tray connections using manufacturer's recommended fittings.

N. Install capped metal sleeves for future cables through walls.

O. Install cable trays with enough workspace to permit access for installing cables.

P. Separate cables of different systems, such as power, communications, a data processing.

1. Install barriers between power cables and any other cable system, such as communications and data processing.

3.2 CABLE INSTALLATION

A. Install cables only when each cable tray run has been completed and inspected.

B. Fasten cables on horizontal runs with cable clamps or cable ties according to NEMA VE 2. Tighten clamps only enough to secure the cable, without indenting the cable jacket. Install cable ties with a tool that includes an automatic pressure-limiting device.

C. Fasten cables on vertical runs to cable trays every 18 inches (450 mm).

D. Fasten and support cables that pass from one cable tray to another or drop from cable trays to equipment enclosures. Fasten cables to the cable tray at the point of exit and support cables independent of the enclosure. The cable length between cable trays or between cable tray and enclosure shall be no more than 72 inches (1800 mm).

3.3 CONNECTIONS

A. Connect raceways to cable trays according to requirements in NEMA VE 2.

3.4 FIELD QUALITY CONTROL

A. Perform the following tests and inspections:
   1. After installing cable trays and after electrical circuitry has been energized, survey for compliance with requirements.
   2. Visually inspect cable insulation for damage. Correct sharp corners, protuberances in cable trays, vibrations, and thermal expansion and contraction conditions, which may cause or have caused damage.
   3. Verify that the number, size, and voltage of cables in cable trays do not exceed that permitted by NFPA 70. Verify that communications or data-processing circuits are separated from power circuits by barriers or are installed in separate cable trays.
   4. Verify that there are no intruding items such as pipes, hangers, or other equipment in the cable tray.
   5. Remove dust deposits, industrial process materials, trash of any description, and any blockage of tray ventilation.
   6. Visually inspect each cable tray joint and each ground connection for mechanical continuity. Check bolted connections between sections for corrosion. Clean and retorque in suspect areas.
   7. Check for missing, incorrect, or damaged bolts, bolt heads, or nuts. When found, replace with specified hardware.

B. Prepare test and inspection reports.

3.5 PROTECTION

A. Protect installed cable trays and cables.
   1. Install temporary protection for cables in open trays to safeguard exposed cables against falling objects or debris during construction. Temporary protection for cables and cable tray can be constructed of wood or metal materials and shall remain in place until the risk of damage is over.

END OF SECTION

SECTION 26 05 43 – UNDERGROUND RACEWAY SYSTEMS

PART 1 - GENERAL

1.1 THE REQUIREMENT

A. The Contractor shall provide underground raceway systems, including trenching backfill, compaction, and restoration, complete and in place, in accordance with the Contract Documents.

1.2 CONTRACTOR SUBMITTALS

A. Furnish submittals in accordance with Section 01 33 00, and 26 00 00 “Electrical General Requirements.”

B. Shop Drawings
   1. Complete catalog cuts of all conduit and fittings marked where applicable to show proposed materials and finishes.

C. Record Drawings
   1. Show routings, burial depths, locations and sizes.

PART 2 - PRODUCTS

2.1 GENERAL

A. Fittings that are dedicated to the underground raceway system shall comply with the requirements of this Section.

2.2 UNDERGROUND CONDUITS

A. Underground raceways shall be:
   1. Schedule 40 HOPE. HOPE for buried horizontal runs shall be UL-Listed, compliant with NEC articles 300 and 353 and Listed to UL 651 A&B and NEMA TC-7. OR
   2. PVC-Coated GRC meeting the requirements of 26 05 33.

B. Identification Tape: Continuous lengths of underground warning tapes shall be installed a minimum of 12-inches above and parallel to conduits. Tape shall be 6-inches wide polyethylene film imprinted "CAUTION - ELECTRIC UTILITIES BELOW." Tape shall have non-ferrous metal foil conductor sandwiched in the tape for detection purposes. Tape shall be as manufactured by Brady, or equal.

PART 3 - EXECUTION

3.1 GENERAL

A. Underground raceways shall be installed between structures as indicated. Raceway systems shall be electrically and mechanically complete before conductors are installed. Bends and offsets shall be smooth and symmetrical, and shall be fabricated with tools designed for this purpose. Factory elbows shall be utilized wherever possible. Unless otherwise noted provide PVC-Coated GRC for vertical sweeps and risers.

B. Raceway routing shall be adjusted to avoid obstructions.

3.2 INSTALLATION

A. Raceways shall be installed in accordance with the criteria below:
   1. Raceway shall be laid on a grade line of at least 3-inches per 100-feet, sloping towards handholes or structures. Conduit shall be installed and handhole depths adjusted so that

the top of the conduit is a minimum of 24-inches below grade and a minimum of 24-inches below roadways, driveways, and bike trails.

2. Changes in direction of the duct envelope by more than 10 degrees horizontally or vertically shall be accomplished using factory elbows.
3. Raceway shall be installed in accordance with the Manufacturer's requirements and recommendations. The bottom of trench shall be of select backfill or sand.
4. Each of the completed raceways shall be cleaned by drawing through it a standard flexible mandrel one foot long and 1/4-inch smaller than the nominal size of the duct. After passing of the mandrel, a wire brush and swab shall be drawn through.
5. Provide Dura-line Shur-lok II, or approved equal, fittings when converting between different raceway materials (i.e.: HOPE to PVC-Coated GRC).

B. Raceway penetration through walls of structures and handholes below grade shall be watertight.

C. When raceway enters a building, conduit shall transition to rigid steel PVC-coated conduit on stub-up.

D. Where an underground raceway enters a structure through a concrete wall, provide a Link-Seal, or equal sealing device. The sealing device shall be utilized with plastic coated rigid steel c

3.3 RESTORATION

A. The Contractor shall restore all disturbed areas.

B. Grassed areas shall be backfilled, compacted, and top-soiled and reseeded.

C. Gravel driveways shall be restored including backfill and compaction to 95 percent density to match existing.

END OF SECTION

SECTION 26 05 48 – SEISMIC CONTROL FOR ELECTRICAL

PART 1 – GENERAL

1.1 RELATED DOCUMENTS

A. Drawings and general provisions of the Contract, including General and Supplementary Conditions and Division 01 Specification Sections, apply to this Section.

1.2 SUMMARY

A. Section Includes:
1. Seismic-restraint and wind-restraint loading requirements.
2. Restraint channel bracings.
3. Restraint cables.
4. Seismic-restraint accessories.
5. Mechanical anchor bolts.
6. Adhesive anchor bolts.

1.3 ACTION SUBMITTALS

A. Product Data: For each type of product.
1. Illustrate and indicate style, material, strength, fastening provision, and finish for each type and size of seismic-restraint component used
a. Annotate to indicate application

1.4 INFORMATIONAL SUBMITTALS

A. Coordination Drawings: Show coordination of seismic bracing for electrical components with other systems and equipment in the vicinity, including other supports and seismic restraints.

1.5 QUALITY ASSURANCE

A. Comply with seismic-restraint requirements in the IBC unless requirements in this Section are more stringent.

B. Seismic-restraint devices shall have horizontal and vertical load testing and analysis. They shall bear anchorage preapproval from OSHPD in addition to preapproval, showing maximum seismic-restraint ratings, by ICC-ES or another agency acceptable to authorities having jurisdiction. Ratings based on independent testing are preferred to ratings based on calculations. If preapproved ratings are not available, submittals based on independent testing are preferred. Calculations (including combining shear and tensile loads) that support seismic-restraint designs must be signed and sealed by a qualified professional engineer.

PART 2 - PRODUCTS

2.1 PERFORMANCE REQUIREMENTS

A. Seismic-Restraint Loading: Per structural Drawings.

B. Wind-Restraint Loading: Per Structural drawings.

2.2 RESTRAINT CHANNEL BRACING

A. Description: MFMA-4, shop- or field-fabricated bracing assembly made of slotted stainless steel channels with accessories for attachment to braced component at one end and to building structure at the other end, with other matching components, and with corrosion resistant coating; rated in tension, compression, and torsion forces

2.3 RESTRAINT CABLES

A. Restraint Cables: ASTM A 603 galvanized-steel cables. End connections made of steel assemblies with thimbles, brackets, swivel, and bolts designed for restraining cable service; with a minimum of two clamping bolts for cable engagement.

2.4 SEISMIC-RESTRAINT ACCESSORIES

A. Hanger-Rod Stiffener: Stainless Steel tube or stainless steel slotted-support-system sleeve with internally bolted connections to hanger rod.

B. Hinged and Swivel Brace Attachments: Multifunctional stainless steel connectors for attaching hangers to rigid channel bracings.

C. Bushings for Floor-Mounted Equipment Anchor Bolts: Neoprene bushings designed for rigid equipment mountings and matched to type and size of anchor bolts and studs.

D. Bushing Assemblies for Wall-Mounted Equipment Anchorage: Assemblies of neoprene elements and stainless steel sleeves designed for rigid equipment mountings and matched to type and size of attachment devices used.

E. Resilient Isolation Washers and Bushings: One-piece, molded, oil- and water-resistant neoprene, with a flat washer face.

2.5 MECHANICAL ANCHOR BOLTS

A. Mechanical Anchor Bolts: Drilled-in and stud-wedge or female-wedge type in zinc-coated steel for interior applications and stainless steel for wet or exterior applications. Select anchor bolts with strength required for anchor and as tested according to ASTM E 488.

2.6 ADHESIVE ANCHOR BOLTS

A. Adhesive Anchor Bolts: Drilled-in and capsule anchor system containing PVC or urethane methacrylate-based resin and accelerator, or injected polymer or hybrid mortar adhesive. Provide anchor bolts and hardware with stainless steel for interior applications and stainless steel for exterior applications. Select anchor bolts with strength required for anchor and as tested according to ASTM E 488.

PART 3 – EXECUTION

3.1 EXAMINATION

A. Examine areas and equipment to receive vibration isolation and seismic-control devices for compliance with requirements for installation tolerances and other conditions affecting performance of the Work.

B. Examine roughing-in for reinforcement and cast-in-place anchors to verify actual locations before installation.

C. Proceed with installation only after unsatisfactory conditions have been corrected.

3.2 APPLICATIONS

A. Multiple Raceways or Cables: Secure raceways and cables to trapeze member with clamps approved for application by an agency acceptable to authorities having jurisdiction.

B. Hanger-Rod Stiffeners: Install hanger-rod stiffeners where indicated or scheduled on Drawings to receive them and where required to prevent buckling of hanger rods caused by seismic forces.

C. Strength of Support and Seismic-Restraint Assemblies: Where not indicated, select sizes of components so strength will be adequate to carry present and future static and seismic loads within specified loading limits.

3.3 SEISMIC-RESTRAINT DEVICE INSTALLATION

A. Equipment and Hanger Restraints:
   1. Install resilient, bolt-isolation washers on equipment anchor bolts where clearance between anchor and adjacent surface exceeds 0.125 inch.
   2. Install seismic-restraint devices using methods approved by an agency acceptable to authorities having jurisdiction providing required submittals for component.

B. Install cables so they do not bend across edges of adjacent equipment or building structure.

C. Install bushing assemblies for mounting bolts for wall-mounted equipment, arranged to provide resilient media where equipment or equipment-mounting channels are attached to wall.

D. Attachment to Structure: If specific attachment is not indicated, anchor bracing to structure at flanges of beams, at upper truss chords of bar joists, or at concrete members.

E. Drilled-in Anchors:
   1. Identify position of reinforcing steel and other embedded items prior to drilling holes for anchors. Do not damage existing reinforcing or embedded items during coring or drilling. Notify the structural engineer if reinforcing steel or other embedded items are encountered during drilling. Locate and avoid pre-stressed tendons, electrical and telecommunications conduit, and gas lines.
   2. Do not drill holes in concrete or masonry until concrete, mortar, or grout has achieved full design strength.
   3. Wedge Anchors: Protect threads from damage during anchor installation. Heavy duty sleeve anchors shall be installed with sleeve fully engaged in the structural element to which anchor is to be fastened.
   4. Adhesive Anchors: Clean holes to remove loose material and drilling dust prior to installation of adhesive. Place adhesive in holes proceeding from the bottom of the hole and progressing toward the surface in such a manner as to avoid introduction of air pockets in the adhesive.
   5. Set anchors to manufacturer's recommended torque using a torque wrench.
   6. Install zinc-coated steel anchors for interior and stainless-steel anchors for exterior applications.

3.4 ACCOMODATION OF DIFFERENTIAL SEISMIC MOTION

A. Install flexible connections in runs of raceways, cables, wireways, cable trays, and busways where they cross seismic joints, where adjacent sections or branches are supported by different structural elements, and where connection is terminated to equipment that is anchored to a different structural element from the one supporting them as they approach equipment.

3.5 ADJUSTING

A. Adjust restraints to permit free movement of equipment within normal mode of operation.

END OF SECTION

SECTION 26 05 53 – IDENTIFICATION FOR ELECTRICAL SYSTEMS

PART 1 - GENERAL

1.1 RELATED DOCUMENTS

Drawings and general provisions of the Contract, including General and Supplementary Conditions and Division 01 Specification Sections, apply to this Section.

1.2 SUMMARY

A. Section Includes:
1. Color and legend requirements for raceways, conductors, and warning labels and signs.
2. Labels.
3. Bands and tubes.
4. Tapes and stencils.
5. Tags.
6. Signs.
7. Cable ties.
8. Paint for identification.
9. Fasteners for labels and signs.

1.3 ACTION SUBMITTALS

A. Product Data: For each type of product.
1. Include construction details, material descriptions, dimensions of individual components and profiles, and finishes for electrical identification products.

B. Samples: For each type of label and sign to illustrate composition, size, colors, lettering style, mounting provisions, and graphic features of identification products.

C. Identification Schedule: For each piece of electrical equipment and electrical system components to be an index of nomenclature for electrical equipment and system components used in identification signs and labels. Use same designations indicated on Drawings.

D. Delegated-Design Submittal: For arc-flash hazard study.

PART 2 - PRODUCTS

2.1 PERFORMANCE REQUIREMENTS

A. Comply with ASME A13.1 and IEEE C2.

B. Comply with NFPA 70.

C. Comply with 29 CFR 1910.144 and 29 CFR 1910.145.

D. Comply with ANSI Z535.4 for safety signs and labels.

E. Comply with NFPA 70E requirements for arc-flash warning labels.

F. Adhesive-attached labeling materials, including label stocks, laminating adhesives, and inks used by label printers, shall comply with UL 969.

G. Thermal Movements: Allow for thermal movements from ambient and surface temperature changes.

1. Temperature Change: 120 deg F (67 deg C), ambient; 180 deg F (100 deg C), material surfaces.

2.2 COLOR AND LEGEND REQUIREMENTS

A. Raceways and Cables Carrying Circuits at 600 V or Less:
   1. Black letters on an orange field.
   2. Legend: Indicate voltage and system or service type.

B. Color-Coding for Phase- and Voltage-Level Identification, 300 V or Less: Use colors listed below for ungrounded service feeder and branch-circuit conductors.
   1. Color shall be factory applied or field applied for sizes larger than No. 8 AWG if authorities having jurisdiction permit.
   2. Colors for 240/120-V Circuits:
      a. Phase A: Black.
      b. Phase B: Red.
      c. Phase C: Blue.
      d. High LEG shall be orange.
   3. Color for Neutral: White.
   4. Color for Equipment Grounds: Green.
   5. Colors for Isolated Grounds: Green with two or more yellow stripes.

C. Warning Label Colors:
   1. Identify system voltage with black letters on an orange background.

D. Warning labels and signs shall include, but are not limited to, the following legends:
   1. Multiple Power Source Warning: "DANGER - ELECTRICAL SHOCK HAZARD - EQUIPMENT HAS MULTIPLE POWER SOURCES."
   2. Workspace Clearance Warning: "WARNING - OSHA REGULATION - AREA IN FRONT OF ELECTRICAL EQUIPMENT MUST BE KEPT CLEAR FOR 36 INCHES (915 MM)."

E. Equipment Identification Labels:
   1. Black letters on a white field.

2.3 LABELS

A. Vinyl Wraparound Labels: Preprinted, flexible labels laminated with a clear, weather- and chemical-resistant coating and matching wraparound clear adhesive tape for securing label ends.

B. Snap-around Labels: Slit, pretensioned, flexible, preprinted, color-coded acrylic sleeves, with diameters sized to suit diameters and that stay in place by gripping action.

C. Self-Adhesive Wraparound Labels: Preprinted, 3-mil- (0.08-mm-) thick, polyester flexible label with acrylic pressure-sensitive adhesive.
   1. Self-Lamination: Clear; UV-, weather- and chemical-resistant; self-laminating, protective shield over the legend. Labels sized such that the clear shield overlaps the entire printed legend.
   2. Marker for Labels: Permanent, waterproof, black ink marker recommended by tag manufacturer.
   3. Marker for Labels: Machine-printed, permanent, waterproof, black ink recommended by printer manufacturer.

D. Self-Adhesive Labels: Polyester, thermal, transfer-printed, 3-mil- (0.08-mm-) thick, multicolor, weather- and UV-resistant, pressure-sensitive adhesive labels, configured for intended use and location.
   1. Minimum Nominal Size:
      a. 1-1/2 by 6 inches (37 by 150 mm) for raceway and conductors.
      b. 3-1/2 by 5 inches (76 by 127 mm) for equipment.
      c. As required by authorities having jurisdiction.

2.4 BANDS AND TUBES

A. Snap-around, Color-Coding Bands: Slit, pretensioned, flexible, solid-colored acrylic sleeves, 2 inches (50 mm) long, with diameters sized to suit diameters and that stay in place by gripping action.

B. Heat-Shrink Preprinted Tubes: Flame-retardant polyolefin tubes with machine-printed identification labels, sized to suit diameter and shrunk to fit firmly. Full shrink recovery occurs at a maximum of 200 deg F (93 deg C). Comply with UL 224.

2.5 TAPES AND STENCILS

A. Marker Tapes: Vinyl or vinyl-cloth, self-adhesive wraparound type, with circuit identification legend machine printed by thermal transfer or equivalent process.

B. Self-Adhesive Vinyl Tape: Colored, heavy duty, waterproof, fade resistant; not less than 3 mils (0.08 mm) thick by 1 to 2 inches (25 to 50 mm) wide; compounded for outdoor use.

C. Tape and Stencil: 4-inch- (100-mm-) wide black stripes on 10-inch (250-mm) centers placed diagonally over orange background and are 12 inches (300 mm) wide. Stop stripes at legends.

D. Floor Marking Tape: 2-inch- (50-mm-) wide, 5-mil (0.125-mm) pressure-sensitive vinyl tape, with [black and white] [yellow and black] stripes and clear vinyl overlay.

E. Underground-Line Warning Tape:
   1. Tape:
      a. Recommended by manufacturer for the method of installation and suitable to identify and locate underground electrical and communications utility lines.
      b. Printing on tape shall be permanent and shall not be damaged by burial operations.
      c. Tape material and ink shall be chemically inert and not subject to degradation when exposed to acids, alkalis, and other destructive substances commonly found in soils.

   2. Color and Printing:
      a. Comply with ANSI Z535.1, ANSI Z535.2, ANSI Z535.3, ANSI Z535.4, and ANSI Z535.5.
      b. Inscriptions for Red-Colored Tapes: "ELECTRIC LINE, HIGH VOLTAGE".
      c. Inscriptions for Orange-Colored Tapes: "TELEPHONE CABLE, CATV CABLE, COMMUNICATIONS CABLE, OPTICAL FIBER CABLE".

   3. Tag: Type I:
      a. Pigmented polyolefin, bright colored, compounded for direct-burial service.
      b. Width: 3 inches (75 mm).

c. Thickness: 4 mils (0.1 mm).
d. Weight: 18.5 lb/1000 sq. ft. (9.0 kg/100 sq. m).
e. Tensile according to ASTM D882: 30 lbf (133.4 N) and 2500 psi (17.2 MPa).

4. Tag: Type II:
   a. Multilayer laminate, consisting of high-density polyethylene scrim coated with pigmented polyolefin; bright colored, compounded for direct-burial service.
   b. Width: 3 inches (75 mm).
   c. Thickness: 12 mils (0.3 mm).
   d. Weight: 36.1 lb/1000 sq. ft. (17.6 kg/100 sq. m).
   e. Tensile according to ASTM D882: 400 lbf (1780 N) and 11,500 psi (79.2 MPa).

5. Tag: Type ID:
   a. Detectable three-layer laminate, consisting of a printed pigmented polyolefin film, a solid aluminum-foil core, and a clear protective film that allows inspection of the continuity of the conductive core; bright colored, compounded for direct-burial service.
   b. Width: 3 inches (75 mm).
   c. Overall Thickness: 5 mils (0.125 mm).
   d. Foil Core Thickness: 0.35 mil (0.00889 mm).
   e. Weight: 28 lb/1000 sq. ft. (13.7 kg/100 sq. m).
   f. Tensile according to ASTM D882: 70 lbf (311.3 N) and 4600 psi (31.7 MPa).

6. Tag: Type IID:
   a. Reinforced, detectable three-layer laminate, consisting of a printed pigmented woven scrim, a solid aluminum-foil core, and a clear protective film that allows inspection of the continuity of the conductive core; bright-colored, compounded for direct-burial service.
   b. Width: 3 inches (75 mm).
   c. Overall Thickness: 8 mils (0.2 mm).
   d. Foil Core Thickness: 0.35 mil (0.00889 mm).
   e. Weight: 34 lb/1000 sq. ft. (16.6 kg/100 sq. m).
   f. Tensile according to ASTM D882: 300 lbf (1334 N) and 12,500 psi (86.1 MPa).

F. Stenciled Legend: In nonfading, waterproof, black ink or paint. Minimum letter height shall be 1 inch (25 mm).

2.6 TAGS

A. Metal Tags: Brass or aluminum, 2 by 2 by 0.05 inch (50 by 50 by 1.3 mm), with stamped legend, punched for use with self-locking cable tie fastener.

B. Nonmetallic Preprinted Tags: Polyethylene tags, 0.023 inch (0.58 mm) thick, color-coded for phase and voltage level, with factory printed permanent designations; punched for use with self- locking cable tie fastener.

C. Write-on Tags:
   1. Polyester Tags: 0.015 inch (0.38 mm) thick, with corrosion-resistant grommet and cable tie for attachment.
   2. Marker for Tags: Permanent, waterproof, black ink marker recommended by tag manufacturer.

3. Marker for Tags: Machine-printed, permanent, waterproof, black ink marker recommended by printer manufacturer.

2.7 SIGNS

A. Baked-Enamel Signs:
1. Preprinted aluminum signs, high-intensity reflective, punched or drilled for fasteners, with colors, legend, and size required for application.
2. 1/4-inch (6.4-mm) grommets in corners for mounting.
3. Nominal Size: 7 by 10 inches (180 by 250 mm).

B. Metal-Backed Butyrate Signs:
1. Weather-resistant, nonfading, preprinted, cellulose-acetate butyrate signs, with 0.0396-inch (1-mm) galvanized-steel backing, punched and drilled for fasteners, and with colors, legend, and size required for application.
2. 1/4-inch (6.4-mm) grommets in corners for mounting.
3. Nominal Size: 10 by 14 inches (250 by 360 mm).

C. Laminated Acrylic or Melamine Plastic Signs:
1. Engraved legend.
2. Thickness:
a. For signs up to 20 sq. in. (129 sq. cm), minimum 1/16 inch (1.6 mm) thick.
b. For signs larger than 20 sq. in. (129 sq. cm), 1/8 inch (3.2 mm) thick.
c. Engraved legend with black letters on white face.
d. Punched or drilled for mechanical fasteners with 1/4-inch (6.4-mm) grommets in corners for mounting.
e. Framed with mitered acrylic molding and arranged for attachment at applicable equipment.

2.8 CABLE TIES

A. General-Purpose Cable Ties: Fungus inert, self-extinguishing, one piece, self-locking, and Type 6/6 nylon.
1. Minimum Width: 3/16 inch (5 mm).
2. Tensile Strength at 73 Deg F (23 Deg C) according to ASTM D638: 12,000 psi (82.7 MPa).
3. Temperature Range: Minus 40 to plus 185 deg F (Minus 40 to plus 85 deg C).
4. Color: Black, except where used for color-coding.

B. UV-Stabilized Cable Ties: Fungus inert, designed for continuous exposure to exterior sunlight, self-extinguishing, one piece, self-locking, and Type 6/6 nylon.
1. Minimum Width: 3/16 inch (5 mm).
2. Tensile Strength at 73 Deg F (23 Deg C) according to ASTM D638: 12,000 psi (82.7 MPa).
3. Temperature Range: Minus 40 to plus 185 deg F (Minus 40 to plus 85 deg C).
4. Color: Black.

C. Plenum-Rated Cable Ties: Self-extinguishing, UV stabilized, one piece, and self-locking.
1. Minimum Width: 3/16 inch (5 mm).
2. Tensile Strength at 73 Deg F (23 Deg C) according to ASTM D638: 7000 psi (48.2 MPa).
3. UL 94 Flame Rating: 94V-0.
4. Temperature Range: Minus 50 to plus 284 deg F (Minus 46 to plus 140 deg C).
5. Color: Black.

2.9 MISCELLANEOUS IDENTIFICATION PRODUCTS

A. Paint: Comply with requirements in painting Sections for paint materials and application requirements. Retain paint system applicable for surface material and location (exterior or interior).

B. Fasteners for Labels and Signs: Self-tapping, stainless-steel screws or stainless-steel machine screws with nuts and flat and lock washers.

PART 3 - EXECUTION

3.1 PREPARATION

A. Self-Adhesive Identification Products: Before applying electrical identification products, clean substrates of substances that could impair bond, using materials and methods recommended by manufacturer of identification product.

3.2 INSTALLATION

A. Verify and coordinate identification names, abbreviations, colors, and other features with requirements in other Sections requiring identification applications, Drawings, Shop Drawings, manufacturer's wiring diagrams, and operation and maintenance manual. Use consistent designations throughout Project.

B. Install identifying devices before installing acoustical ceilings and similar concealment.

C. Verify identity of each item before installing identification products.

D. Coordinate identification with Project Drawings, manufacturer's wiring diagrams, and operation and maintenance manual.

E. Apply identification devices to surfaces that require finish after completing finish work.

F. Install signs with approved legend to facilitate proper identification, operation, and maintenance of electrical systems and connected items.

G. System Identification for Raceways and Cables under 300 V: Identification shall completely encircle cable or conduit. Place identification of two-color markings in contact, side by side.
   1. Secure tight to surface of conductor, cable, or raceway.

H. Auxiliary Electrical Systems Conductor Identification: Identify field-installed alarm, control, and signal connections.

I. Emergency Operating Instruction Signs: Install instruction signs with white legend on a red background with minimum 3/8-inch- (10-mm-) high letters for emergency instructions at equipment used for power transfer.

J. Elevated Components: Increase sizes of labels, signs, and letters to those appropriate for viewing from the floor.

K. Accessible Fittings for Raceways: Identify the covers of each junction and pull box of the following systems with the wiring system legend and system voltage. System legends shall be as follows:
   1. "EMERGENCY POWER."
   2. "POWER."
   3. "UPS."

L. Vinyl Wraparound Labels:
   1. Secure tight to surface of raceway or cable at a location with high visibility and accessibility.
   2. Attach labels that are not self-adhesive type with clear vinyl tape, with adhesive appropriate to the location and substrate.

M. Snap-around Labels: Secure tight to surface at a location with high visibility and accessibility.

N. Self-Adhesive Wraparound Labels: Secure tight to surface at a location with high visibility and accessibility.

O. Self-Adhesive Labels:
   1. On each item, install unique designation label that is consistent with wiring diagrams, schedules, and operation and maintenance manual.
   2. Unless otherwise indicated, provide a single line of text with 1/2-inch- (13-mm-) high letters on 1-1/2-inch- (38-mm-) high label; where two lines of text are required, use labels 2 inches (50 mm) high.

P. Snap-around Color-Coding Bands: Secure tight to surface at a location with high visibility and accessibility.

Q. Heat-Shrink, Preprinted Tubes: Secure tight to surface at a location with high visibility and accessibility.

R. Marker Tapes: Secure tight to surface at a location with high visibility and accessibility.

S. Self-Adhesive Vinyl Tape: Secure tight to surface at a location with high visibility and accessibility.
   1. Field-Applied, Color-Coding Conductor Tape: Apply in half-lapped turns for a minimum distance of 6 inches (150 mm) where splices or taps are made. Apply last two turns of tape with no tension to prevent possible unwinding.

T. Tape and Stencil: Comply with requirements in painting Sections for surface preparation and paint application.

U. Floor Marking Tape: Apply stripes to finished surfaces following manufacturer's written instructions.

V. Underground Line Warning Tape:
   1. During backfilling of trenches, install continuous underground-line warning tape directly above cable or raceway at 6 to 8 inches (150 to 200 mm) below finished grade. Use multiple tapes where width of multiple lines installed in a common trench exceeds 16 inches (400 mm) overall.
   2. Limit use of underground-line warning tape to direct-buried cables.

3. Install underground-line warning tape for direct-buried cables and cables in raceways.

W. Metal Tags:
1. Place in a location with high visibility and accessibility.
2. Secure using UV-stabilized cable ties.

X. Nonmetallic Preprinted Tags:
1. Place in a location with high visibility and accessibility.
2. Secure using UV-stabilized cable ties.

Y. Write-on Tags:
1. Place in a location with high visibility and accessibility.
2. Secure using UV-stabilized cable ties.

Z. Baked-Enamel Signs:
1. Attach signs that are not self-adhesive type with mechanical fasteners appropriate to the location and substrate.
2. Unless otherwise indicated, provide a single line of text with 1/2-inch- (13-mm-) high letters on minimum 1-1/2-inch- (38-mm-) high sign; where two lines of text are required, use signs minimum 2 inches (50 mm) high.

AA. Metal-Backed Butyrate Signs:
1. Attach signs that are not self-adhesive type with mechanical fasteners appropriate to the location and substrate.
2. Unless otherwise indicated, provide a single line of text with 1/2-inch- (13-mm-) high letters on 1-1/2-inch- (38-mm-) high sign; where two lines of text are required, use labels 2 inches (50 mm) high.

BB. Laminated Acrylic or Melamine Plastic Signs:
1. Attach signs that are not self-adhesive type with mechanical fasteners appropriate to the location and substrate.
2. Unless otherwise indicated, provide a single line of text with 1/2-inch- (13-mm-) high letters on 1-1/2-inch- (38-mm-) high sign; where two lines of text are required, use labels 2 inches (50 mm) high.

CC. Cable Ties: General purpose, for attaching tags, except as listed below:
1. Outdoors: UV-stabilized nylon.
2. In Spaces Handling Environmental Air: Plenum rated.

3.3 IDENTIFICATION SCHEDULE

A. Install identification materials and devices at locations for most convenient viewing without interference with operation and maintenance of equipment. Install access doors or panels to provide view of identifying devices.

B. Identify conductors, cables, and terminals in enclosures and at junctions, terminals, pull points, and locations of high visibility. Identify by system and circuit designation.

C. Accessible Raceways, 300 V or Less, for Service, Feeder, and Branch Circuits, More Than 30 A and 120 V to Ground: Identify with self-adhesive raceway labels.
1. Locate identification at changes in direction, at penetrations of walls and floors, at 50-foot (15-m) maximum intervals in straight runs, and at 25-foot (7.6-m) maximum intervals in congested areas.

D. Accessible Fittings for Raceways and Cables within Buildings: Identify the covers of each junction and pull box of the following systems with self-adhesive labels containing the wiring system legend and system voltage. System legends shall be as follows:
   1. "EMERGENCY POWER."
   2. "POWER."
   3. "UPS."

E. Power-Circuit Conductor Identification, 600 V or Less: For conductors in vaults, pull and junction boxes, manholes, and handholes, use vinyl wraparound labels to identify the phase.
   1. Locate identification at changes in direction, at penetrations of walls and floors, at 50-foot (15-m) maximum intervals in straight runs, and at 25-foot (7.6-m) maximum intervals in congested areas.

F. Control-Circuit Conductor Identification: For conductors and cables in pull and junction boxes, manholes, and handholes, use write-on tags with the conductor or cable designation, origin, and destination.

G. Control-Circuit Conductor Termination Identification: For identification at terminations, provide self-adhesive labels with the conductor designation.

H. Conductors to Be Extended in the Future: Attach write-on tags to conductors.

I. Auxiliary Electrical Systems Conductor Identification: Marker tape that is uniform and consistent with system used by manufacturer for factory-installed connections.
   1. Identify conductors, cables, and terminals in enclosures and at junctions, terminals, and pull points. Identify by system and circuit designation.

J. Locations of Underground Lines: Underground-line warning tape for power, lighting, communication, and control wiring and optical-fiber cable.

K. Workspace Indication: Apply tape and stencil to finished surfaces. Show working clearances in the direction of access to live parts. Workspace shall comply with NFPA 70 and 29 CFR 1926.403 unless otherwise indicated. Do not install at flush-mounted panelboards and similar equipment in finished spaces.

L. Instructional Signs: Self-adhesive labels, including the color code for grounded and ungrounded conductors.

M. Warning Labels for Indoor Cabinets, Boxes, and Enclosures for Power and Lighting: Self-adhesive labels.
   1. Apply to exterior of door, cover, or other access.
   2. For equipment with multiple power or control sources, apply to door or cover of equipment, including, but not limited to, the following:
      a. Power-transfer switches.
      b. Controls with external control power connections.

N. Arc Flash Warning Labeling: Self-adhesive labels.

O. Operating Instruction Signs: Self-adhesive labels.

P. Emergency Operating Instruction Signs: Self-adhesive labels with white legend on a red background with minimum 3/8-inch- (10-mm-) high letters for emergency instructions at equipment used for power transfer.

Q. Equipment Identification Labels:
   1. Indoor Equipment: Self-adhesive label.
   2. Outdoor Equipment: Laminated acrylic or melamine sign.
   3. Equipment to Be Labeled:
      a. Panelboards: Typewritten directory of circuits in the location provided by panelboard manufacturer. Panelboard identification shall be in the form of a self- adhesive, engraved, laminated acrylic or melamine label.
      b. Enclosures and electrical cabinets.
      c. Access doors and panels for concealed electrical items.
      d. Panelboards.
      e. Transformers: Label that includes tag designation indicated on Drawings for the transformer, feeder, and panelboards or equipment supplied by the secondary.
      f. Substations.
      g. Emergency system boxes and enclosures.
      h. Motor-control centers.
      i. Enclosed switches.
      j. Enclosed circuit breakers.
      k. Enclosed controllers.
      l. Variable-speed controllers.
      m. Push-button stations.
      n. Power-transfer equipment.
      o. Contactors.
      p. Remote-controlled switches, dimmer modules, and control devices.
      q. Power-generating units.
      r. Monitoring and control equipment.
      s. UPS equipment.

END OF SECTION

SECTION 26 05 73 – OVERCURRENT PROTECTIVE DEVICE COORDINATION STUDIES

PART 1 - GENERAL

1.1 THE REQUIREMENT

A. The Contractor shall perform short circuit, arc-fault and protective device studies for the Filtration building electrical power system as described herein. Provide labels for all individual protective devices, switchboards, Motor Control Centers (MCCs) and panels based on the results of the studies.

B. The Work of this Section shall include protection studies for motors with solid state overload and overcurrent protection devices.

C. It is the responsibility of the Contractor to obtain the information required from the electric utility and appropriate vendors.

D. The study shall include the typical operating arrangements of the power electrical system as shown in the table below:

Utility Service	Standby Generator
X	O
O	X
Note: 1 . X – Power Supply ON; O – Power Supply OFF	

1.2 QUALIFICATIONS

A. Short circuit studies, protective device evaluation studies, arc-flash hazard analysis studies, and protective device coordination studies shall be performed by a manufacturer who has been regularly engaged in short circuit and protective device coordination services for a period of at least 15 years.

B. The indicated studies shall be signed by the professional electrical engineer, registered in the State of Alaska, responsible for the studies.

C. The studies shall utilize computer software programs with national distribution and proven reliability and accuracy for performing 3-phase fault-duty calculations in compliance with IEEE 399, and capable of:

1. Plotting and diagramming time-current-characteristic curves as part of its output, with identification of device settings and ratings of all overcurrent protective devices.
2. Arcing fault studies with arc-flash hazard boundary calculations.

1.3 CONTRACTOR SUBMITTALS

A. The indicated studies shall be submitted and approved by the Engineer prior to final approval of the distribution equipment Shop Drawings and release of equipment for manufacture.

B. An initial short circuit study shall be submitted and reviewed before the Engineer will approve the Shop Drawings for switchgear, transformers, or 480-volt distribution equipment.

C. Submit an initial protective device coordination study shall be submitted with 90 days after the approval of the initial short circuit study.

D. The short circuit, arc-flash hazard analysis, and protective device coordination studies shall be updated prior to Project Substantial Completion; utilize characteristics of as- installed equipment and materials.

E. The adequacy of the equipment "withstand" and interruption ratings shall be approved by the Engineer.

1.4 MANUFACTURERS' SERVICES

A. The low-voltage switchgear manufacturer shall furnish the services of a qualified field engineer and necessary tools and equipment in order to test, calibrate, and adjust the protective relays and circuit breaker trip devices as recommended in the power system coordination study.

B. Contractor shall furnish the services of a qualified field engineer to calibrate the downstream MCCs as recommended in the power system study.

1.5 MAIN CIRCUIT BREAKER COORDINATION

A. Contractor shall perform all adjustments to both new and existing adjustable Main Circuit Breakers (MCBs) downstream as recommended by the Coordination study.

PART 2 – PRODUCTS

2.1 LABELS

A. Pre-printed self-adhesive vinyl labels with clear chemical resistant coating per Article 3.6.
   3. Warning signs for arc-flash hazard boundary, with safety color coding of warning signs as required by OSHA. See 3.7 for list of parameters to display.
   4. Labels for protective device calibration and setting record.

PART 3 - EXECUTION

3.2 GENERAL

A. The studies shall include development of single-line and impedance diagrams of the power system.

B. The diagrams shall identify components considered in the study and the ratings of power devices, including transformers, circuit breakers, relays, fuses, busses, and cables.

C. The resistances and reactances of cables shall be identified in the impedance diagram.

D. The studies shall contain written data from the electric utility company regarding maximum available short circuit current, voltage, and X/R ratio of the utility power system.

E. The studies shall include every protective device and feeder included or modified within the WORK.

F. The first upstream overcurrent device outside the WORK shall be used as a fixed reference.

G. The studies shall include all portions of the electrical distribution system for normal and standby power sources down to and including the 480-volt distribution system.

3.3 SHORT CIRCUIT STUDY

A. The short circuit study shall be performed with the aid of a digital computer program, and shall be in accordance with the following Standards:

ANSI/IEEE 141	Recommended Practice for Electrical Power Distribution for Industrial Plants
ANSI/IEEE 242	Recommended Practice for Protection, and Coordination of Industrial, and Commercial Power Systems
ANSI/IEEE 399	Recommended Practice for Power Systems Analysis
ANSI/IEEE C 37.010	Application Guide for AC High-Voltage Circuit Breakers Rated on a Symmetrical Current Basis
ANSI/IEEE C 37.13	Low-Voltage AC Power Circuit Breakers Used in Enclosures

3.4 PROTECTIVE DEVICE EVALUATION STUDY

A. A protective device evaluation study shall be performed in order to determine the adequacy of circuit breakers, molded case switches, and fuses.

B. Any problem areas or inadequacies in the equipment due to prospective short-circuit currents shall be promptly brought to the attention of the Engineer.

C. Do not utilize series-rated circuit breakers to meet short circuit requirements for this project.

D. Devices shall be fully rated to withstand available fault currents.

3.5 PROTECTIVE DEVICE EVALUATION STUDY

A. A protective device coordination study shall be performed in order to develop the necessary calculations to select power fuse ratings, protective relay characteristics and settings, ratios and characteristics of associated current transformers, and low-voltage breaker trip characteristics and settings.

B. Any problem areas or inadequacies in the equipment due to prospective short-circuit currents shall be promptly brought to the Engineer's attention.

C. The study shall be inclusive of all distribution feeders and recommendations implemented.

3.6 TIME/CURRENT COORDINATION CURVES

A. As a minimum, the time/current coordination curves for the power distribution system shall include the following items plotted on 5-cycle log-log graph paper:

1. time/current curves for each protective relay, circuit breaker, or fuse demonstrating graphically that the settings will provide protection and selectivity within industry standards

2. Each curve shall be identified, and tap and time dial settings shall be specified.
3. Provide individual curves for each feeder unless identical to others.
4. Selectivity
    a. Time/current curves for each device shall be positioned to provide the maximum selectivity to minimize system disturbances during fault clearing.
    b. Where selectivity cannot be achieved, the Engineer shall be notified as to the cause.
    c. Recommendations shall be included for alternate methods that would improve selectivity.
5. Time/current curves and points for cable and equipment damage.
6. Circuit interrupting device operating and interrupting times
7. Indicate maximum fault values on the graph.
8. Sketch of bus and breaker arrangement
9. Magnetizing inrush points of transformers
10. Thermal limits of dry-type and liquid-insulated transformers (ANSI damage curve)
11. Every restriction of the ANSI and National Electrical Code shall be followed, and proper coordination intervals and separation of characteristics curves shall be maintained.

3.7 ARC FLASH STUDY

A. An arc flash study shall be performed with the aid of a digital computer program in order to determine the "Arc Flash Protection Boundary" and "Personal Protective Equipment" (PPE) levels for applicable electrical distribution equipment, stand-alone disconnects, starters, and variable frequency drives (VFDs) in the power distribution system.

B. The arc flash study shall be performed in conjunction with short circuit calculations and protective device coordination.

C. The arc flash study shall be in accordance with the latest version of the following Standards:

NFPA 70E	Standard for Electrical Safety Requirements for Employee Workplaces
IEEE 1584	IEEE guide for performing Arc Flash Hazard Calculations
OSHA (29 CFR PART 1910)	Occupational Safety and Health Standards for General Industry
ANSI Z535.4	Product Safety Signs and Labels

D. The recommended values for the "Arc Flash Protection Boundary" and PPE levels, based on the arc flash study results, shall be tabulated in the study.

E. The Arc Flash analysis shall include calculations for maximum and minimum contributions of the fault current magnitude. The minimum calculation shall assume that the utility contribution is at a minimum and shall assume a minimum motor load. Conversely, the maximum calculation shall assume a maximum contribution from the utility and shall assume motors to be operating under full-load conditions.

F. Arc Flash computation shall include both line and load side of main breaker calculations, where necessary.

G. Arc Flash calculations shall be performed for each generator supplying power and utility supplying power.

H. Safety and Arc Flash Placards

1. The digital computer program shall provide the "Arc Flash Protection Boundary" and PPE values in a format that can be directly printed on to labels for the worst case result.
2. OSHA compliant labeling shall be included on all electrical panels, equipment, and applicable raceways. This includes:
    a. high voltage warning,
    b. arc flash hazard rating,
    c. system voltage,
    d. maximum fault current,
    e. series combination rating,
    f. amps interrupting rating (AIC),
    g. clearance requirement warning,
    h. turn off power prior to working inside equipment,
    i. label for conductor color coding,
    j. label to identify power source,
    k. other OSHA/NEC required labeling depending on installation.
3. The Contractor shall provide (furnish and post in the field) these labels in accordance with Section 26 00 00 "Electrical Work, General" and Article 2.1.
4. The Contractor shall merge the arc flash results and provide a complete list for a worst case value for each bus.

3.8 FINAL SUMMARY REPORT

A. Summarize the results of the indicated power system studies in a final report.

B. The report shall include the following items:

1. single-line diagram
2. impedance diagram
3. tabulation of all protective devices identified on the single line diagram
4. time/current coordination curves
5. specific recommendations, if any
6. test instrumentation, condition, and connections, as applicable, for each study
7. computerized fault current calculations
8. any suggested changes to the protection scheme or equipment selection that will result in improved system reliability and safety.
9. recommendations to minimize the arc flash energy.

C. The report shall include information concerning the computer program used for the study, as well as a general discussion of the procedure, items, and data considered in the preparation of the study.

D. Submit digital files and 4 bound copies of the report to the Engineer.

3.9 PROTECTIVE DEVICE TESTING, CALIBRATION, AND ADJUSTMENT

A. Test, calibrate, and adjust the protective relays and circuit breaker trip devices in accordance with the recommendations in the power system coordination study.

B. Calibrate both new and existing MCBs in accordance with the recommendations in the power system study.

C. Adjustments shall be made prior to energizing any electrical equipment.

3.10 FIELD TESTING

A. Coordinate the requirements of this section with field testing as specified in other sections.

3.11 LABELS

A. Provide a unique readily identifiable label applied to each overcurrent protective device after examination, calibration, testing and acceptance, that indicates the acceptance date and contact information for the agency certifying performance of overcurrent protective devices.

B. Post arc-flash hazard boundary warning signs on equipment as required by NFPA 70E.

END OF SECTION

SECTION 26 22 00 – DRY TYPE TRANSFORMERS

PART 1 - GENERAL

1.1 RELATED DOCUMENTS

A. Drawings and general provisions of the Contract, including General and Supplementary Conditions and Division 01 Specification Sections, apply to this Section.

1.2 SUMMARY

A. This section includes the following types of dry-type transformers rated 600 V and less, with capacities up to 1000 kVA:

1. Distribution transformers.

1.3 ACTION SUBMITTALS

A. Product Data: Include rated nameplate data, capacities, weights, dimensions, minimum clearances, installed devices and features, and performance for each type and size of transformer indicated.

B. Shop Drawings: Detail equipment assemblies and indicate dimensions, weights, loads, required clearances, method of field assembly, components, and location and size of each field connection.

1.4 INFORMATIONAL SUBMITTALS

A. Source quality-control test reports.

B. Field quality-control test reports.

1.5 CLOSEOUT SUBMITTALS

A. Operation and Maintenance Data: For transformers to include in emergency, operation, and maintenance manuals.

1.6 QUALITY ASSURANCE

A. Source Limitations: Obtain each transformer type through one source from a single manufacturer.

B. Electrical Components, Devices, and Accessories: Listed and labeled as defined in NFPA 70, Article 100, by a testing agency acceptable to authorities having jurisdiction, and marked for intended use.

C. Comply with IEEE C57.12.91, "Test Code for Dry-Type Distribution and Power Transformers."

1.7 DELIVERY, STORANGE, AND HANDLING

A. Temporary Heating: Apply temporary heat according to manufacturer's written instructions within the enclosure of each ventilated-type unit, throughout periods during which equipment is not energized and when transformer is not in a space that is continuously under normal control of temperature and humidity.

1.8 COORDINATION

A. Coordinate size and location of concrete bases with actual transformer provided. Cast anchor-bolt inserts into bases. Concrete, reinforcement, and formwork requirements are specified with concrete.

B. Coordinate installation of wall-mounting and structure-hanging supports with actual transformer provided.

PART 2 - PRODUCTS

2.1 MANUFACTURERS

A. Available Manufacturers: Subject to compliance with requirements, manufacturers offering products that may be incorporated into the Work include, but are not limited to, the following:
   1. Acme Electric Corporation.
   2. Challenger Electrical Equipment Corp.
   3. Controlled Power Company.
   4. Eaton Electrical Sector; Eaton Corporation; Cutler-Hammer Products.
   5. Federal Pacific Transformer Company.
   6. General Electric Company.
   7. Hammond Co.
   8. Magnetek Power Electronics Group.
   9. Micron Industries Corp.
   10. Myers Power Products, Inc.
   11. Siemens Energy & Automation, Inc.
   12. Sola/Hevi-Duty.
   13. Square D Co./Groupe Schneider NA; Schneider Electric.

2.2 GENERAL TRANSFORMER REQUIREMENTS

A. Description: Factory-assembled and -tested, air-cooled units for 60-Hz service.

B. Cores: Grain-oriented, non-aging silicon steel.

C. Coils: Continuous windings without splices except for taps.
   1. Internal Coil Connections: Brazed or pressure type.
   2. Coil Material: Aluminum.

2.3 DISTRIBUTION TRANSFORMERS

A. Comply with NEMA ST 20, and list and label as complying with UL 1561.

B. Cores: One leg per phase.

C. Enclosure: Ventilated, NEMA 250, Type 2.

D. Transformer Enclosure Finish: Comply with NEMA 250.
   1. Finish Color: Gray.

E. Taps for Transformers Smaller Than 3 kVA: None.

F. Taps for Transformers 25 kVA and Larger: Two 2.5 percent taps above and two 2.5 percent taps below normal full capacity.

G. Insulation Class: 220 deg C, UL-component-recognized insulation system with a maximum of 115 deg C rise above 40 deg C ambient temperature.

H. Energy Efficiency for Transformers Rated 15 kVA and Larger:
   1. Complying with NEMA TP 1, Class 1 efficiency levels.
   2. Tested according to NEMA TP 2.

I. Wall Brackets: Manufacturer's standard brackets.

J. Low-Sound-Level Requirements: Minimum of 3 dBA less than NEMA ST 20 standard sound levels when factory tested according to IEEE C57.12.91.

2.4 SOURCE QUALITY CONTROL

A. Test and inspect transformers according to IEEE C57.12.91.

PART 3 - EXECUTION

3.1 EXAMINATION

A. Examine conditions for compliance with enclosure- and ambient-temperature requirements for each transformer.

B. Verify that field measurements are as needed to maintain working clearances required by NFPA 70 and manufacturer's written instructions.

C. Examine walls, floors, roofs, and concrete bases for suitable mounting conditions where transformers will be installed.

D. Verify that ground connections are in place and requirements in Section 26 05 26 "Grounding" have been met. Maximum ground resistance shall be 5 ohms at location of transformer.

E. Proceed with installation only after unsatisfactory conditions have been corrected.

3.2 INSTALLATION

A. Install wall-mounting transformers level and plumb with wall brackets fabricated by transformer manufacturer.

B. Construct concrete bases and anchor floor-mounting transformers according to manufacturer's written instructions, and requirements in Section 16073 "Hangers and Supports for Electrical Systems."

3.3 CONNECTIONS

A. Ground equipment according to Section 26 05 26 "Grounding."

B. Connect wiring according to Section 26 05 19 "Wire and Cables."

3.4 FIELD QUALITY CONTROL

A. Perform tests and inspections and prepare test reports.

B. Tests and Inspections:
   1. Perform each visual and mechanical inspection and electrical test stated in NETA Acceptance Testing Specification. Certify compliance with test parameters.

C. Remove and replace units that do not pass tests or inspections and retest as specified above.
   1. Use an infrared-scanning device designed to measure temperature or detect significant deviations from normal values. Provide documentation of device calibration.

2. Perform 2 follow-up infrared scans of transformers, one at 4 months and the other at 11 months after Substantial Completion.
3. Prepare a certified report identifying transformer checked and describing results of scanning. Include notation of deficiencies detected, remedial action taken, and scanning observations after remedial action.

D. Infrared Scanning: Two months after Substantial Completion, perform an infrared scan of transformer connections.
1. Use an infrared-scanning device designed to measure temperature or detect significant deviations from normal values. Provide documentation of device calibration.
2. Perform 2 follow-up infrared scans of transformers, one at 4 months and the other at 11 months after Substantial Completion.
3. Prepare a certified report identifying transformer checked and describing results of scanning. Include notation of deficiencies detected, remedial action taken, and scanning observations after remedial action.

E. Test Labeling: On completion of satisfactory testing of each unit, attach a dated and signed "Satisfactory Test" label to tested component.

3.5 ADJUSTING

A. Record transformer secondary voltage at each unit for at least 48 hours of typical occupancy period. Adjust transformer taps to provide optimum voltage conditions at secondary terminals. Optimum is defined as not exceeding nameplate voltage plus 10 percent and not being lower than nameplate voltage minus 3 percent at maximum load conditions. Submit recording and tap settings as test results.

B. Output Settings Report: Prepare a written report recording output voltages and tap settings.

3.6 CLEANING

A. Vacuum dirt and debris; do not use compressed air to assist in cleaning.

END OF SECTION

SECTION 26 24 13 - SWITCHBOARDS

PART 1 - GENERAL

1.1 RELATED DOCUMENTS

A. Drawings and general provisions of the Contract, including General and Supplementary Conditions and Division 01 Specification Sections, apply to this Section.

1.2 SUMMARY

A. Section Includes:

1. The Contractor shall provide 480V switchboards, complete and operable as indicated and in accordance with the Contract Documents.

B. Related Sections:

1. Section 26 05 00 – Electrical Work, General
2. Section 26 05 26 – Grounding and Bonding
3. Section 26 05 48 - Seismic Controls for Electrical Systems
4. Section 26 05 53 - Identification for Electrical Systems
5. Section 26 05 73 – Overcurrent Protective Device Coordination Studies

C. UL Label

1. Switchboard assemblies shall bear a UL label.
2. Furnish certified copies of design test reports demonstrating compliance with UL standards.

1.3 REFERENCES

A. Reference Codes

1. The indicated Work shall conform to or exceed the applicable requirements of the National Electrical Code (NEC), provided that where a local code or ordinance is in conflict.
2. Additional requirements are indicated in Section 26 05 00 “Electrical Work, General.”
3. Commercial Standards

ANSI/NFPA 70	National Electrical Code
ANSI Z55.1	Gray Finishes for Industrial Apparatus and Equipment
NEMA PB 2	Dead-front Distribution Switchboards.
NEMA PB 2.1	General Instructions for Proper Handling, Installation, Operation, and Maintenance of Dead-front Distribution Switchboards Rated 600 Volts or Less.
NETA ATS	Acceptance Testing Specifications for Electrical Power Distribution Equipment and Systems.
UL 489	Molded-Case Circuit Breakers, Molded-Case Switches, and Circuit-Breaker Enclosures.

UL 891	Switchboards
UL 1066	UL Standard for Safety Low-Voltage AC and DC Power Breakers used in Enclosures

1.4 CONTRACTOR SUBMITTALS

A. Submittals shall conform to the requirements of Section 26 05 00 “Electrical Work, General.” In addition, submit the following:
   1. Submit sufficient information to determine compliance with the Contract Documents. Identify submittal data with the specific equipment tags and/or service descriptions to which they pertain. Submittal data shall be clearly marked to identify the specific model numbers, options, and features of equipment and work proposed.
   2. Submit from the Contract Documents shall be indicated within the submittal. Each deviation shall reference the corresponding drawing or specification number, show the Contract Document requirement text and/or illustration, and shall be accompanied by a detailed written justification for the deviation.
   3. Submit required product data and shop drawings specific to each product and accessory proposed. In addition, include the following information, including dimensions and manufacturer’s technical data on features, performance, ratings and finishes:
      a. Each type of overcurrent protective device;
      b. Surge Protective Devices (SPD);
      c. Ground Fault Protectors;
      d. Additional accessories and components indicated herein;
      e. Indicate front and side enclosure elevations with overall dimensions, conduit entrance locations and requirements, nameplate legends, one-line diagrams, equipment schedule and switchboard instrument details;

B. Closeout submittals: Comply with Contract Provisions, and include:
   1. Project Record Documents: Record actual locations, configurations, overcurrent protective device settings, and ratings of switchboards and their components on single line diagrams and plan layouts.
   2. Operation and Maintenance Data: Submit spare parts data listing; source of replacement parts and supplies; and recommended maintenance procedures and intervals.

1.5 QUALITY ASSURANCE

A. Manufacturer Qualifications:
   1. Manufacturer shall be a firm engaged in the manufacture of specified products of types and sizes required, and whose products have been in satisfactory use in similar service for a minimum of 20 years.
   2. Manufacturer shall have a valid ISO 9001 certification and an applicable quality assurance system that is regularly reviewed and audited by a third-party registrar. Manufacturing, inspection, and testing procedures shall be developed and controlled under the guidelines of the quality assurance system.

3. The manufacturer or their representative shall have service, repair, and technical support services available 24 hours 7 days a week basis.
4. The manufacturer shall have the ISO 14001 Environment Certification and shall supply the Product Environmental Profile (P.E.P.) upon request of the Engineer.

B. Installer Qualifications: Installer shall be a firm that shall have a minimum of five years of successful installation experience with projects utilizing switchboards similar in type and scope to that required for this Project.

C. Inspecting and Testing Agency Qualifications: To qualify for acceptance, an independent inspecting and testing agency hired by the Contractor or manufacturer to test products shall demonstrate to the Architect/Engineer's satisfaction that they are qualified according to ASTM E 329 to conduct testing indicated.

D. All work performed and all materials used shall be in accordance with the National Electrical Code, and with applicable local regulations and ordinances. Equipment, assemblies and materials shall be listed and labeled by Underwriter's Laboratories or by a testing agency acceptable to authorities having jurisdiction, and marked for intended use.

1.6 DELIVERY, STORAGE AND HANDLING

A. Prior to delivery to the Project site, ensure that suitable storage space is available to store materials in a well-ventilated area protected from weather, moisture, soiling, extreme temperatures, humidity, and corrosive atmospheres. Materials shall be protected during delivery and storage and shall not exceed the manufacturer stated storage requirements. As a minimum, store indoors in clean, dry space with uniform temperature to prevent condensation. In addition, protect electronics from all forms of electrical and magnetic energy that could reasonably cause damage.

B. Deliver materials to the Project site in supplier's or manufacturer's original wrappings and containers, labeled with supplier's or manufacturer's name, material or product brand name, and equipment tag number or service name as identified within the Contract Documents.

C. Inspect and report any concealed damage or violation of delivery storage, and handling requirements to the Engineer.

1.7 COORDINATION

A. The requirements for protective device coordination studies for electrical distribution system protection are indicated in Section 26 05 73 "Overcurrent Protective Device Coordination Studies."

B. Coordinate dimensions, seismic anchorage, and conduit entry requirements for switchboards with the structural foundation concrete work as indicated by the Contract Documents.

1.8 WARRANTY

A. Manufacturer's Warranty: Manufacturer agrees to repair or replace components that fail in materials or workmanship within specified warranty period.
B. Period: One year from date of Substantial Completion.

PART 2 - PRODUCTS

2.1 MANUFACTURER

A. Basis-of-Design Product: Subject to compliance with requirements, provide Square D QED-2 Switchboard by Schneider Electric by Schneider Electric, or Engineer approved equal.

B. Switchboard specified herein shall be the product of a single manufacturer. Products and manufacturers specified are to establish a standard of quality for design, function, materials, and appearance.

2.2 GENERAL REQUIREMENTS

A. Switchboards shall be front-accessible only and comply with NEMA PB 2 and UL 891.

B. Switchboard electrical ratings shall be 480Y277V, 3 phase, 4 wire. The entire assembly shall be suitable for 600 volts maximum AC service.

C. Ratings shall not be less than shown on the drawings. Short circuit ratings shall not be less than the available fault current shown in the Overcurrent Protective Device Coordination Study.

D. Switchboards shall include flange provisions for bolted termination to busways as indicated on Drawings.

E. Switchboards shall be manufactured by Schneider Electric or engineer approved equivalent**.**

2.3 SWITCHBOARD CONSTRUCTION FEATURES

A. Switchboards shall consist of free-standing vertical sections with the complement of circuit breakers and accessories as indicated. The construction shall facilitate the addition of future components or sections where indicated

B. Switchboards shall consist of the required number of vertical sections bolted together to form a rigid steel structure for each assembly. All sections of the switchboard shall align front and rear with depth as shown on the Drawings. The overall enclosure shall be a NEMA 1.

C. All edges of switchboard front covers shall be formed. The sides shall be covered with removable bolt-on covers for de-energized access only. Hinged and removable panels shall be reinforced with stiffening members in order to minimize vibration. Steel shall be of select quality, free of dents, and true to level after forming.

D. Each switchboard assembly shall be provided with suitable lifting means.

E. Switchboards shall be labeled in accordance with UL requirements.

F. All protective devices shall be front removable and compartmentalized with line and load bus connections.

G. Current transformers for feeder instrumentation, where shown on the plans, shall be located within the appropriate breaker compartments and be front accessible and removable.

H. Provide arc flash warning signs, short circuit current level sign.

2.4 SURGE PROTECTIVE DEVICES

A. Surge protection devices shall comply with Section 26 43 13 “Surge Protective Devices for Low Voltage Electrical Power Circuits.”

B. Surge protective devices shall be listed and components shall be recognized in accordance with UL 1449 to include Section 37.3 highest fault current category. Surge protective devices shall be UL 1283 listed.

C. Surge protective devices shall be installed by, and shipped from, the electrical distribution equipment manufacturer’s factory.

D. Provide surge current diversion paths for all modes of protection; L-N, L-G and N-G in WYE systems.

E. Surge protective devices shall be modular in design. Each mode, including N-G, shall be fused with a 200 kA IR UL-classified surge-rated fuse and incorporating a thermal cutout device.

F. Audible diagnostic monitoring shall be by way of audible alarm. Alarm shall activate upon a fault condition. Provide an alarm on/off switch to silence alarm. Provide an alarm push-to-test switch.

G. If a dedicated breaker for the surge protective device is not provided, the surge protective device shall include an UL-recognized disconnect switch.

H. Meet or exceed the following criteria:
    1. Minimum surge current capability (single pulse rated) per phase shall be 120 kA
    2. UL 1449 suppression voltage rating, voltage L-N, L-G, N-G, shall be 480Y/277 volts; 600 volts.

I. EMI/RFI filtering shall be minimum -50 dB at 100 kHz with insertion ratio of 50:1 using MIL-STD-220 methodology.

J. Provide with one set of NO/NC dry contacts.

K. Accessories shall include but shall not be limited to, six-digit transient counter set to total transient surges that deviate from the sine wave envelope by more than 12 volts.

2.5 BUSES AND CONNECTIONS

A. Three phase, four wire, unless otherwise indicated. Provide hard-drawn plated copper of 98 percent conductivity.

B. Group-Mounted Feeder Vertical Bus Stack:
    1. Bus stack shall be capable of mounting feeder breakers with different frame sizes and number of poles across from one another on the bus stack.
    2. Non-conducting surface films shall be removed during circuit breaker installation by a wiping action of the circuit breaker jaws.

3. The design of the circuit breaker jaws and bus stack shall create blow-on forces under fault conditions.
4. Bolted lap joint connections for feeder breakers shall not be allowed for group-mounted feeders.

C. Ground Bus: Size per current NEC and UL 891 Tables 28.1 and 28.2, hard-drawn copper of 98 percent conductivity, equipped with pressure connectors for feeder and branch circuit ground conductors. For busway feeders, extend insulated equipment grounding cable to busway ground connection and support cable at intervals in vertical run.

D. Bus Composition: Tin plated copper Plating shall be applied continuously to bus work. The switchboard bussing shall be of sufficient cross-sectional area to meet UL 891 temperature rise requirements. The phase and neutral through-bus shall have an ampacity as shown on the Drawings. For four-wire systems, the neutral shall be of equivalent ampacity as the phase bus bar. Tapered bus is not permitted. Full provisions for the addition of future sections shall be provided. Bussing shall include, but shall not be limited to, necessary hardware to accommodate splicing for future additions.

E. Isolation Barrier Access Provisions: Allows for inspection access to check bus bolt torque values.

2.6 CIRCUIT BREAKERS

A. Breaker Type:
1. Thermal magnetic/basic electronic circuit breakers.
2. Electronic trip, standard and advanced.
3. Current-limiting circuit breakers.
4. GFCI circuit breakers (single-pole and two-pole configurations with 30-mA trip sensitivity).

B. Molded Case Circuit Breaker Features and Accessories: Standard frame sizes, trip ratings, and number of poles.
1. Lugs: Mechanical style, suitable for number, size, trip ratings, and conductor material.
2. Application Listing: Appropriate for application; Type SWD for switching fluorescent lighting loads; Type HACR for heating, air-conditioning, and refrigerating equipment.
3. Ground Fault Protection: Integral to circuit breaker with adjustable pickup and time delay settings, push-to-test feature, and ground fault indicator.
4. Shunt Trip: 120-volt trip coil energized from separate circuit.
5. Undervoltage Trip: Set to operate at 35 to 75 percent of rated voltage with field-adjustable 0.1 second to 0.6 second time delay.
6. Auxiliary Contacts: Two SPDT switches with "a" and "b" contacts; "a" contacts shall mimic circuit breaker contacts, "b" contacts shall operate in reverse of circuit breaker contacts.
7. Key Interlock Kit: Externally mounted to prohibit circuit breaker operation; key shall be removable only when circuit breaker is in off position.
8. Zone Selective Interlocking: Integral with electronic trip unit; for interlocking ground fault protection function.

C. Enclosed, Insulated Case Circuit Breaker: Fully rated, encased power circuit breaker with interrupting capacity rating to meet available fault current.
    1. Mounting: Fixed circuit breaker mounting.
    2. Closing: Two-step, stored energy closing.
    3. Trip Units: Microprocessor-based trip units with interchangeable rating plug, LED trip indicators, and the following field-adjustable settings:
        1) Instantaneous trip.
        2) Long-time and short-time pickup levels.
        3) Long-time and short-time time adjustments with I2t response.
        4) Ground fault pickup level, time delay, and I2t response.
    4. Remote: Remote trip indication and control.
    5. Key Interlock Kit: Externally mounted to prohibit circuit breaker operation; key shall be removable only when circuit breaker is in off position.
    6. Zone Selective Interlocking: Integral with electronic trip unit; for interlocking ground fault protection function.

D. Bolted Pressure Contact Switch: Operating mechanism shall use rotary mechanical bolting action to produce and maintain high clamping pressure on the switch blade after it engages the stationary contacts.

E. Fused Switch: NEMA KS 1, Type HD; shall clip to accommodate specified fuses; lockable handle.

2.2 CONTROL POWER

A. Small Control Circuits: 120-volts, supplied through secondary disconnecting devices from control power transformer.

B. Electrically Interlocked Main and Tie Circuit Breakers: Two control power transformers, with interlocking relays, connected to the primary side of each control power transformer at the line side of the associated main circuit breaker. Provide 120-volt secondaries connected through automatic transfer relays to ensure a fail-safe automatic transfer scheme.

C. Control Power Fuses: Primary and secondary fuses for current-limiting and overload protection of transformer and fuses for protection of control circuits.

D. Control Wiring: Factory-installed, with bundling, lacing, and protection included. Provide flexible conductors for No. 8 AWG and smaller, for conductors across hinges, and for conductors for interconnections between shipping units.

2.3 MARKINGS AND LABELING

A. All identification and warning labels and nameplates exterior to the switchboard shall be resistant to their intended installation environment.

B. Each switchboard shall be provided with an engraved nameplate identifying the project specific equipment tag and service description.
    1. Warning labels and nameplates shall be present at access locations to advise personnel of possible hazards. The switchboard shall be marked in accordance with UL, NFPA 70 NEC, NFPA 70E, and other applicable standards.

PART 3 - EXECUTION

3.1 INSTALLATION

A. The Contractor shall install switchboards in accordance with the manufacturer's instructions.

B. Prior to energizing, the equipment shall be cleaned, inspected for loose connections, checked out for electrical and mechanical operations, phase-sequenced, and all circuits shall be made free of any shorts of ground connections following field testing.

3.2 TRAINING

A. The Contractor shall provide a training session for Owner’s representatives.

B. The training program shall consist of the instruction on the operation of the assembly, circuit breakers, and major components within the assembly.

3.3 FIELD TESTING

A. Coordinate field testing with the requirements of Section 26 05 73 “Overcurrent Protective Device Coordination Studies.”

END OF SECTION

SECTION 26 24 16 - PANELBOARDS

PART 1 – GENERAL

1.1 RELATED DOCUMENTS

A. Drawings and general provisions of the Contract, including General and Supplementary Conditions and Division 01 Specification Sections, apply to this Section.

1.2 SUMMARY

A. Section Includes:
   1. Lighting and appliance branch-circuit panelboards.

1.3 ACTION SUBMITTALS

A. Product Data: For each type of panelboard, switching and overcurrent protective device, accessory, and component indicated. Include dimensions and manufacturers' technical data on features, performance, electrical characteristics, ratings, and finishes.

B. Shop Drawings: For each panelboard and related equipment.
   1. Include dimensioned plans, elevations, sections, and details. Show tabulations of installed devices, equipment features, and ratings.
   2. Detail enclosure types and details for types other than NEMA 250, Type 1.
   3. Detail bus configuration, current, and voltage ratings.
   4. Short-circuit current rating of panelboards and overcurrent protective devices.
   5. Detail features, characteristics, ratings, and factory settings of individual overcurrent protective devices and auxiliary components.

1.4 INFORMATIONAL SUBMITTALS

A. Field Quality-Control Reports:
   1. Test procedures used.
   2. Test results that comply with requirements.
   3. Results of failed tests and corrective action taken to achieve test results that comply with requirements.

B. Panelboard Schedules: For installation in panelboards.

1.5 CLOSEOUT SUBMITTALS

A. Operation and Maintenance Data: For panelboards and components to include in emergency, operation, and maintenance manuals. In addition to items specified in Division 1, include the following:
   1. Manufacturer's written instructions for testing and adjusting overcurrent protective devices.

1.6 QUALITY ASSURANCE

A. Source Limitations: Obtain panelboards, overcurrent protective devices, components, and accessories from single source from single manufacturer.

B. Product Selection for Restricted Space: Drawings indicate maximum dimensions for panelboards including clearances between panelboards and adjacent surfaces and other items. Comply with indicated maximum dimensions.

C. Electrical Components, Devices, and Accessories: Listed and labeled as defined in NFPA 70, by a qualified testing agency, and marked for intended location and application.

D. Comply with NEMA PB 1.

E. Comply with NFPA 70.

1.7 DELIVERY, STORAGE, AND HANDLING

A. Remove loose packing and flammable materials from inside panelboards; install temporary electric heating (250 W per panelboard) to prevent condensation.

B. Handle and prepare panelboards for installation according to NEMA PB 1.

1.8 PROJECT CONDITIONS

A. Environmental Limitations:
   1. Do not deliver or install panelboards until spaces are enclosed and weathertight, wet work in spaces is complete and dry, work above panelboards is complete, and temporary heating system is operating and maintaining ambient temperature and humidity conditions at occupancy levels during the remainder of the construction period.
   2. Rate equipment for continuous operation under the following conditions unless otherwise indicated:
      a. Ambient Temperature: Not exceeding [minus 22 deg F (minus 30 deg C)] [23 deg F (minus 5 deg C)] to plus 104 deg F (plus 40 deg C).
      b. Altitude: Not exceeding 6600 feet (2000 m).

B. Service Conditions: NEMA PB 1, usual service conditions, as follows:
   1. Ambient temperatures within limits specified.
   2. Altitude not exceeding 6600 feet (2000 m).

1.9 COORDINATION

A. Coordinate layout and installation of panelboards and components with other construction that penetrates walls or is supported by them, including electrical and other types of equipment, raceways, piping, encumbrances to workspace clearance requirements, and adjacent surfaces. Maintain required workspace clearances and required clearances for equipment access doors and panels.

1.10 WARRANTY

A. Manufacturer's Warranty: Manufacturer agrees to repair or replace components that fail in materials or workmanship within specified warranty period.

B. Period: One year from date of Substantial Completion.

PART 2 - PRODUCTS

2.1 GENERAL REQUIREMENTS FOR PANELBOARDS

A. Enclosures: Surface-mounted cabinets.
   1. Rated for environmental conditions at installed location.
      a. Indoor Dry and Clean Locations: NEMA 250, Type 1.

2. Front: Secured to box with concealed trim clamps. For surface-mounted fronts, match box dimensions.
3. Hinged Front Cover: Entire front trim hinged to box and with standard door within hinged trim cover.
4. Finishes:
   a. Panels and Trim: Steel, factory finished immediately after cleaning and pretreating with manufacturer's standard two-coat, baked-on finish consisting of prime coat and thermosetting topcoat.
   b. Back Boxes: Galvanized steel.
5. Directory Card: Inside panelboard door, mounted in metal frame with transparent protective cover.

B. Phase, Neutral, and Ground Buses:

1. Material: Tin-plated aluminum.
2. Equipment Ground Bus: Adequate for feeder and branch-circuit equipment grounding conductors; bonded to box.

C. Conductor Connectors: Suitable for use with conductor material and sizes.
1. Material: Tin-plated aluminum.
2. Main and Neutral Lugs: Mechanical type.
3. Ground Lugs and Bus-Configured Terminators: Mechanical type.

D. Future Devices: Mounting brackets, bus connections, filler plates, and necessary appurtenances required for future installation of devices.

E. Panelboard Short-Circuit Current Rating: Fully rated to interrupt symmetrical short-circuit current available at terminals.

2.2 LIGHTING AND APPLIANCE BRANCH-CIRCUIT PANELBOARDS

A. Manufacturers: Subject to compliance with requirements, available manufacturers offering products that may be incorporated into the Work include, but are not limited to, the following:
1. Eaton Electrical Inc.; Cutler-Hammer Business Unit.
2. General Electric Company; GE Consumer & Industrial - Electrical Distribution.
3. Siemens Energy & Automation, Inc.
4. Square D; a brand of Schneider Electric.

B. Panelboards: NEMA PB 1, lighting and appliance branch-circuit type.

C. Mains: lugs only.

D. Branch Overcurrent Protective Devices: Bolt-on circuit breakers, replaceable without disturbing adjacent units.

E. Doors: Concealed hinges; secured with flush latch with tumbler lock; keyed alike.

2.3 DISCONNECTING AND OVERCURRENT PROTECTIVE DEVICES

A. Manufacturers: Subject to compliance with requirements, available manufacturers offering products that may be incorporated into the Work include, but are not limited to, the following:

1. Eaton Electrical Inc.; Cutler-Hammer Business Unit.
2. General Electric Company; GE Consumer & Industrial - Electrical Distribution.
3. Siemens Energy & Automation, Inc.
4. Square D; a brand of Schneider Electric.

B. Molded-Case Circuit Breaker (MCCB): Comply with UL 489, with interrupting capacity to meet available fault currents.
   1. Thermal-Magnetic Circuit Breakers: Inverse time-current element for low-level overloads, and instantaneous magnetic trip element for short circuits. Adjustable magnetic trip setting for circuit-breaker frame sizes 250 A and larger.
   2. GFCI Circuit Breakers: Single- and two-pole configurations with Class A ground-fault protection (6-mA trip).
   3. Ground-Fault Equipment Protection (GFEP) Circuit Breakers: Class B ground-fault protection (30-mA trip).
   4. Molded-Case Circuit-Breaker (MCCB) Features and Accessories:
      a. Standard frame sizes, trip ratings, and number of poles.
      b. Lugs: Mechanical style, suitable for number, size, trip ratings, and conductor materials.
      c. Ground-Fault Protection: Integrally mounted relay and trip unit, push-to-test feature, and ground-fault indicator.
      d. Multipole units enclosed in a single housing or factory assembled to operate as a single unit.

PART 3 - EXECUTION

3.1 EXAMINATION

A. Receive, inspect, handle, and store panelboards according to NEMA PB 1.1.

B. Examine panelboards before installation. Reject panelboards that are damaged or rusted or have been subjected to water saturation.

C. Examine elements and surfaces to receive panelboards for compliance with installation tolerances and other conditions affecting performance of the Work.

D. Proceed with installation only after unsatisfactory conditions have been corrected.

3.2 INSTALLATION

A. Install panelboards and accessories according to NEMA PB 1.1.

B. Mount top of trim 80 inches (2032 mm) above finished floor unless otherwise indicated.

C. Mount panelboard cabinet plumb and rigid without distortion of box.

D. Install overcurrent protective devices and controllers not already factory installed.

E. Install filler plates in unused spaces.

F. Arrange conductors in gutters into groups and bundle and wrap with wire ties.

G. Comply with NECA 1.

3.3 IDENTIFICATION

A. Identify field-installed conductors, interconnecting wiring, and components; provide warning signs complying with Section 26 05 53 "Identification for Electrical Systems."

B. Create a directory to indicate installed circuit loads. Obtain approval before installing. Use a computer or typewriter to create directory; handwritten directories are not acceptable.

C. Panelboard Nameplates: Label each panelboard with a nameplate complying with requirements for identification specified in Section 26 05 53 "Identification for Electrical Systems.

D. Device Nameplates: Label each branch circuit device in distribution panelboards with a nameplate complying with requirements for identification specified in Section 26 05 53 "Identification for Electrical Systems.

3.4 FIELD QUALITY CONTROL

A. Perform tests and inspections.

B. Acceptance Testing Preparation:
   1. Test insulation resistance for each panelboard bus, component, connecting supply, feeder, and control circuit.
   2. Test continuity of each circuit.

C. Tests and Inspections:
   1. Perform each visual and mechanical inspection and electrical test stated in NETA Acceptance Testing Specification. Certify compliance with test parameters.
   2. Correct malfunctioning units on-site, where possible, and retest to demonstrate compliance; otherwise, replace with new units and retest.
   3. Perform the following infrared scan tests and inspections and prepare reports:
      a. Initial Infrared Scanning: After Substantial Completion, but not more than 60 days after Final Acceptance, perform an infrared scan of each panelboard. Remove front panels so joints and connections are accessible to portable scanner.
      b. Follow-up Infrared Scanning: Perform an additional follow-up infrared scan of each panelboard 11 months after date of Substantial Completion.
      c. Instruments and Equipment:
         1) Use an infrared scanning device designed to measure temperature or to detect significant deviations from normal values. Provide calibration record for device.

D. Panelboards will be considered defective if they do not pass tests and inspections.

E. Prepare test and inspection reports, including a certified report that identifies panelboards included and that describes scanning results. Include notation of deficiencies detected, remedial action taken, and observations after remedial action.

3.5 ADJUSTING

A. Adjust moving parts and operable component to function smoothly, and lubricate as recommended by manufacturer.

END OF SECTION

SECTION 26 24 19 - MOTOR-CONTROL CENTERS
PART 1 - GENERAL

1.1 RELATED DOCUMENTS

A. Drawings and general provisions of the Contract, including General and Supplementary Conditions and Division 01 Specification Sections, apply to this Section.

1.2 SUMMARY

A. Section includes MCCs for use with ac circuits rated 600 V and less and having the following factory-installed components:

1. Incoming main lugs and OCPDs.
2. Full-voltage magnetic controllers.
3. VFDs.
4. Instrumentation.
5. Auxiliary devices.

1.3 DEFINITIONS

A. CE: Conformity European (European Compliance).

B. CPT: Control power transformer.

C. EMI: Electromagnetic interference.

D. GFCI: Ground fault circuit interrupting.

E. LED: Light-emitting diode.

F. MCC: Motor-control center.

G. MCCB: Molded-case circuit breaker.

H. MCP: Motor-circuit protector.

I. NC: Normally closed.

J. NO: Normally open.

K. OCPD: Overcurrent protective device.

L. PCC: Point of common coupling.

M. PID: Control action, proportional plus integral plus derivative.

N. PT: Potential transformer.

O. PWM: Pulse-width modulated.

P. RFI: Radio-frequency interference.

Q. SCR: Silicon-controlled rectifier.

R. TDD: Total demand (harmonic current) distortion.

S. THD(V): Total harmonic voltage demand.

T. TVSS: Transient voltage surge suppressor.

U. VFD: Variable-frequency drive.

1.4 ACTION SUBMITTALS

A. Product Data: For each type of controller and each type of MCC. Include shipping and operating weights, features, performance, electrical ratings, operating characteristics, and furnished specialties and accessories.

B. Shop Drawings: For each MCC, manufacturer's production drawings as defined in UL 845. In addition to requirements specified in UL 845, include dimensioned plans, elevations, and sections; and conduit entry locations and sizes, mounting arrangements, and details, including required clearances and service space around equipment.
   1. Show tabulations of installed devices, equipment features, and ratings. Include the following:
      a. Each installed unit's type and details.
      b. Factory-installed devices.
      c. Enclosure types and details.
      d. Nameplate legends.
      e. Short-circuit current (withstand) rating of complete MCC, and for bus structure and each unit.
      f. Features, characteristics, ratings, and factory settings of each installed controller and feeder device, and installed devices.
      g. Specified optional features and accessories.
   2. Schematic and Connection Wiring Diagrams: For power, signal, and control wiring for each installed controller.
   3. Nameplate legends.
   4. Vertical and horizontal bus capacities.
   5. Features, characteristics, ratings, and factory settings of each installed unit.

1.5 INFORMATIONAL SUBMITTALS

A. Standard Drawings: For each MCC, as defined in UL 845.

B. Source quality-control reports.

C. Field quality-control reports.

D. Load-Current and List of Settings of Adjustable Overload Relays: Compile after motors have been installed, and arrange to demonstrate that switch settings for motor running overload protection suit actual motors to be protected.

E. Warranty: Sample of special warranty.

1.6 CLOSEOUT SUBMITTALS

A. Operation and Maintenance Data: For MCCs, all installed devices, and components to include in emergency, operation, and maintenance manuals. In addition to items specified in Section 01 77 00 “Closeout Procedures," include the following:
   1. Manufacturer's Record Drawings: As defined in UL 845. In addition to requirements specified in UL 845, include field modifications and field-assigned wiring identification incorporated during construction by manufacturer, Contractor, or both.
   2. Manufacturer's written instructions for testing and adjusting circuit breaker and MCP trip settings.
   3. Manufacturer's written instructions for setting field-adjustable overload relays.
   4. Manufacturer's written instructions for testing, adjusting, and reprogramming microprocessor control modules.

1.7 MAINTENANCE MATERIAL SUBMITTALS

A. Furnish extra materials described below that match products installed and that are packaged with protective covering for storage and identified with labels describing contents.
   1. Power Fuses: Equal to 10 percent of quantity installed for each size and type, but no fewer than three of each size and type.
   2. Control Power Fuses: Equal to 10 percent of quantity installed for each size and type, but no fewer than three of each size and type.

1.8 QUALITY ASSURANCE

A. Source Limitations: Obtain MCCs and controllers of a single type from single source from single manufacturer.

B. Electrical Components, Devices, and Accessories: Listed and labeled as defined in NFPA 70, by a qualified testing agency, and marked for intended location and application.

C. Comply with NFPA 70.

1.9 DELIVERY, STORAGE, AND HANDLING

A. Deliver MCCs in shipping splits of lengths that can be moved past obstructions in delivery paths.

B. Handle MCCs according to the following:
   1. NEMA ICS 2.3, "Instructions for the Handling, Installation, Operation, and Maintenance of Motor Control Centers Rated Not More Than 600 Volts."
   2. NECA 402, "Recommended Practice for Installing and Maintaining Motor Control Centers."

C. If stored in space that is not permanently enclosed and air conditioned, remove loose packing and flammable materials from inside MCCs; install temporary electric heating, with at least 250 W per vertical section.

1.10 PROJECT CONDITIONS

A. Environmental Limitations: Rate equipment for continuous operation under the following conditions unless otherwise indicated:
   1. Ambient Temperature: Less than 0 deg F (minus 18 deg C) or exceeding 104 deg F (40 deg C), with an average value exceeding 95 deg F (35 deg C) over a 24-hour period.
   2. Ambient Storage Temperature: Not less than minus 4 deg F (minus 20 deg C) and not exceeding 140 deg F (60 deg C).
   3. Humidity: Less than 95 percent (noncondensing).
   4. Altitude: Exceeding 6600 feet (2000 m), or 3300 feet (1000 m) if MCC includes solid- state devices.

B. Product Selection for Restricted Space: Drawings indicate maximum dimensions for MCCs, including clearances between MCCs and adjacent surfaces and other items.

1.11 COORDINATION

A. Coordinate sizes and locations of concrete bases. Cast anchor-bolt inserts into bases.

B. Coordinate features of MCCs, installed units, and accessory devices with remote pilot devices and control circuits to which they connect.

C. Coordinate features, accessories, and functions of each MCC, each controller, and each installed unit with ratings and characteristics of supply circuits, motors, required control sequences, and duty cycle of motors and loads.

1.12 WARRANTY

A. Manufacturer's Warranty: Manufacturer agrees to repair or replace components that fail in materials or workmanship within specified warranty period.

B. Period: One year from date of Substantial Completion.

PART 2 - PRODUCTS

2.1 MANUFACTURED UNITS

A. Manufacturers: Subject to compliance with requirements, provide products by the following:
   a. Rockwell Automation, Inc.; Allen Bradley Brand, or engineer approved equivalent.

B. General Requirements for MCCs: Comply with NEMA ICS 18 and UL 845.

2.2 FUNCTIONAL FEATURES

A. Description: Modular arrangement of main units, controller units, control devices, feeder-tap units, instruments, metering, auxiliary devices, and other items mounted in vertical sections of MCC.

B. Controller Units: Combination controller units.
   1. Install units up to and including Size 3 on drawout mountings with connectors that automatically line up and connect with vertical-section buses while being racked into their normal, energized positions.
   2. Equip units in Type B and Type C MCCs with pull-apart terminal strips for external control connections.

C. Feeder-Tap Units: Through 225-A rating shall have drawout mountings with connectors that automatically line up and connect with vertical-section buses while being racked into their normal, energized positions.

D. Future Units: Compartments fully bused and equipped with guide rails or equivalent, ready for insertion of drawout units.

E. Spare Units: Installed in compartments indicated spare.

2.3 INCOMING MAINS

A. Incoming Mains Location: Top.

B. Main Lugs Only: Conductor connectors suitable for use with conductor material and sizes.
   1. Material: Tin-plated aluminum.
   2. Main and Neutral Lugs: Mechanical type.

C. MCCB: Comply with UL 489, with interrupting capacity to meet available fault currents.
   1. Thermal-Magnetic Circuit Breakers: Inverse time-current element for low-level overloads, and instantaneous magnetic trip element for short circuits. Adjustable magnetic trip setting for circuit-breaker frame sizes 250 A and larger.
   2. MCCB Features and Accessories:
      a. Standard frame sizes, trip ratings, and number of poles.
      b. Lugs: Mechanical style, suitable for number, size, trip ratings, and conductor material.

2.4 COMBINATION CONTROLLERS

A. Full-Voltage Controllers:
   1. General Requirements for Full-Voltage Enclosed Controllers: Comply with NEMA ICS 2, general purpose, Class A.
   2. Magnetic Controllers: Full voltage, across the line, electrically held.
      a. Configuration: Non-reversing and reversing.

B. Disconnecting Means and OCPDs:
   1. Fusible Disconnecting Means:
      a. NEMA KS 1, heavy-duty, horsepower-rated, fusible switch with clips or bolt pads to accommodate Class J fuses.
      b. Lockable Handle: Accepts three padlocks and interlocks with cover in closed position.
      c. Auxiliary Contacts: NO/NC, arranged to activate before switch blades open.
   2. MCP Disconnecting Means:
      a. UL 489, NEMA AB 1, and NEMA AB 3, with interrupting capacity to comply with available fault currents, instantaneous-only circuit breaker with front-mounted, field-adjustable, short-circuit trip coordinated with motor locked-rotor amperes.
      b. Lockable Handle: Accepts three padlocks and interlocks with cover in closed position.
      c. Auxiliary contacts "a" and "b" arranged to activate with MCP handle.
      d. NC alarm contact that operates only when MCP has tripped.
   3. MCCB Disconnecting Means:
      a. UL 489, NEMA AB 1, and NEMA AB 3, with interrupting capacity to comply with available fault currents; thermal-magnetic MCCB, with inverse time-current element for low-level overloads and instantaneous magnetic trip element for short circuits.
      b. Lockable Handle: Accepts three padlocks and interlocks with cover in closed position.
      c. Auxiliary contacts "a" and "b" arranged to activate with MCCB handle.
      d. NC alarm contact that operates only when MCCB has tripped.

C. Overload Relays:
   1. Solid-State Overload Relays:
      a. Switch or dial selectable for motor running overload protection.
      b. Sensors in each phase.
      c. Class 10 tripping characteristic selected to protect motor against voltage and current unbalance and single phasing.
   2. NC isolated overload alarm contact.
   3. External overload reset push button.

D. Control Power:
   1. Control Circuits: 120-V ac; obtained from integral CPT, with primary and secondary fuses, with CPT control power source of sufficient capacity to operate integral devices and remotely located pilot, indicating, and control devices.
      a. CPT Spare Capacity: 200 VA.

2.5 VFDs

A. General Requirements for VFDs: Comply with Section 26 29 23 “Variable Frequency Drives”.

2.6 FEEDER-TAP UNITS

A. MCCB: Comply with UL 489, with interrupting capacity to meet available fault currents.
   1. Thermal-Magnetic Circuit Breakers: Inverse time-current element for low-level overloads, and instantaneous magnetic trip element for short circuits. Adjustable magnetic trip setting for circuit-breaker frame sizes 250 A and larger.
   2. MCCB Features and Accessories:
      a. Standard frame sizes, trip ratings, and number of poles.
      b. Lugs: Mechanical style, suitable for number, size, trip ratings, and conductor material.

B. Fusible Switch: NEMA KS 1, Type HD, clips to accommodate specified fuses with lockable handle.

2.7 MCC CONTROL POWER

A. Control Circuits: 120VAC, supplied through secondary disconnecting devices from CPT.

B. Control Circuits: 120VAC, supplied from remote branch circuit.

C. Control Power Fuses: Primary and secondary fuses for current-limiting and overload protection of transformer and fuses for protection of control circuits.

D. Control Wiring: Factory installed, with bundling, lacing, and protection included. Provide flexible conductors for No. 8 AWG and smaller, for conductors across hinges, and for conductors for interconnections between shipping units.

2.8 ENCLOSURES

A. Indoor Enclosures: Freestanding steel cabinets unless otherwise indicated. NEMA 250, Type 1 unless otherwise indicated to comply with environmental conditions at installed location.

B. Enclosure Finish for Indoor Units: Factory-applied finish in manufacturer's standard gray finish over a rust-inhibiting primer on treated metal surface.

C. Compartments: Modular; individual lift-off doors with concealed hinges and quick-captive screw fasteners. Interlocks on units requiring disconnecting means in off position before door can be opened or closed, except by operating a permissive release device.

D. Interchangeability: Compartments constructed to allow for removal of units without opening adjacent doors, disconnecting adjacent compartments, or disturbing operation of other units in MCC; same size compartments to permit interchangeability and ready rearrangement of units, such as replacing three single units with a unit requiring three spaces, without cutting or welding.

E. Wiring Spaces:
   1. Vertical wireways in each vertical section for vertical wiring to each unit compartment; supports to hold wiring in place.
   2. Horizontal wireways in bottom and top of each vertical section for horizontal wiring between vertical sections; supports to hold wiring in place.

2.9 AUXILIARY DEVICES

A. General Requirements for Control-Circuit and Pilot Devices: NEMA ICS 5; factory installed in controller enclosure cover unless otherwise indicated.
   1. Push Buttons, Pilot Lights, and Selector Switches: Heavy-duty, oil tight type.
      a. Push Buttons: Unguarded types; momentary contact unless otherwise indicated.
      b. Pilot Lights: LED types.
      c. Selector Switches: Rotary type.

B. Reversible NC/NO contactor auxiliary contact(s).

C. Spare control-wiring terminal blocks; wired.

2.10 CHARACTERISTICS AND RATINGS

A. Wiring: NEMA ICS 18, Class I.

B. Control and Load Wiring: Factory installed, with bundling, lacing, and protection included. Provide flexible conductors for No. 8 AWG and smaller, for conductors across hinges, and for conductors for interconnections between shipping units.

C. Nominal System Voltage: 480VAC, three phase, three wire.

D. Short-Circuit Current Rating for Each Unit: 65 kA.

E. Environmental Ratings:
   1. Ambient Temperature Rating: Not less than 0 deg F (minus 18 deg C) and not exceeding 104 deg F (40 deg C), with an average value not exceeding 95 deg F (35 deg C) over a 24-hour period.
   2. Ambient Storage Temperature Rating: Not less than minus 4 deg F (minus 20 deg C) and not exceeding 140 deg F (60 deg C)
   3. Humidity Rating: Less than 95 percent (noncondensing).
   4. Altitude Rating: Not exceeding 6600 feet (2000 m), or 3300 feet (1000 m) if MCC includes solid-state devices.

F. Main-Bus Continuous Rating: 600 A.

G. Vertical-Bus Minimum Continuous Rating: 300 A.

H. Horizontal and Vertical Bus Bracing (Short-Circuit Current Rating): Match MCC short-circuit current rating.

I. Main Horizontal and Equipment Ground Buses: Uniform capacity for entire length of MCC's main and vertical sections.

J. Vertical Phase and Equipment Ground Buses: Uniform capacity for entire usable height of vertical sections, except for sections incorporating single units.

K. Phase-Bus Material: Tin-plated, high-strength, electrical-grade aluminum alloy.

L. Ground Bus: Minimum size required by UL 845, hard-drawn copper of 98 percent conductivity, equipped with mechanical connectors for feeder and branch-circuit equipment grounding conductors.

M. Front-Connected, Front-Accessible MCCs:
1. Main Devices: Fixed mounted.
2. Controller Units: Drawout and fixed mounted.
3. Feeder-Tap Units: Drawout mounted.
4. Sections front and rear aligned.

N. Bus Transition and Incoming Pull Sections: Matched and aligned with basic MCC.

O. Future Devices: Equip compartments with mounting brackets, supports, bus connections, and appurtenances at full rating of unit.

P. Bus-Bar Insulation: Factory-applied, flame-retardant, tape wrapping of individual bus bars or flame-retardant, spray-applied insulation. Minimum insulation temperature rating of 105 deg C.

2.11 SOURCE QUALITY CONTROL

A. MCC Testing: Inspect and test MCCs according to requirements in NEMA ICS 18.

B. VFD Testing: Test and inspect VFCs according Section 26 29 23, “Variable Frequency Drives”.

C. MCCs will be considered defective if they do not pass tests and inspections.

D. Prepare test and inspection reports.

PART 3 - EXECUTION

3.1 EXAMINATION

A. Examine areas and surfaces to receive MCCs, for compliance with requirements for installation tolerances, and other conditions affecting performance of the Work.

B. Examine enclosed controllers before installation. Reject enclosed controllers that are wet, moisture damaged, or mold damaged.

C. Proceed with installation only after unsatisfactory conditions have been corrected.

3.2 INSTALLATION

A. Coordinate layout and installation of MCCs with other construction including conduit, piping, equipment, and adjacent surfaces. Maintain required workspace clearances and required clearances for equipment access doors and panels.

B. Floor-Mounting Controllers: Install MCCs on 4-inch (100-mm) nominal thickness concrete base.
1. Install dowel rods to connect concrete base to concrete floor. Unless otherwise indicated, install dowel rods on 18-inch (450-mm) centers around the full perimeter of concrete base.

2. For supported equipment, install epoxy-coated anchor bolts that extend through concrete base and anchor into structural concrete floor.
3. Place and secure anchorage devices. Use setting drawings, templates, diagrams, instructions, and directions furnished with items to be embedded.
4. Install anchor bolts to elevations required for proper attachment to supported equipment.

C. Temporary Lifting Provisions: Remove temporary lifting eyes, channels, and brackets and temporary blocking of moving parts from enclosures and components.

D. Install fuses in each fusible switch.

E. Install fuses in control circuits if not factory installed. Comply with requirements in Section 26 28 13 "Fuses."

F. Install, connect, and fuse thermal-protector monitoring relays furnished with motor-driven equipment.

G. Comply with NECA 1.

3.3 IDENTIFICATION

A. Comply with requirements in Section 26 05 53 "Identification for Electrical Systems" for identification of MCC, MCC components, and control wiring.
1. Identify field-installed conductors, interconnecting wiring, and components; provide warning signs.
2. Label MCC and each cubicle with engraved nameplate.
3. Label each enclosure-mounted control and pilot device.
4. Mark up a set of manufacturer's connection wiring diagrams with field-assigned wiring identifications and return to manufacturer for inclusion in Record Drawings.

B. Operating Instructions: Frame printed operating instructions for MCCs, including control sequences and emergency procedures. Fabricate frame of finished metal, and cover instructions with clear acrylic plastic. Mount on front of MCCs.

3.4 CONTROL WIRING INSTALLATION

A. Install wiring between enclosed controllers and remote devices. Comply with requirements in Section 26 05 23 "Control-Voltage Electrical Power Cables."

B. Bundle, train, and support wiring in enclosures.

C. Connect selector switches and other automatic-control selection devices where applicable.
1. Connect selector switches to bypass only those manual- and automatic-control devices that have no safety functions when switch is in manual-control position.

3.5 CONNECTIONS

A. Comply with requirements for installation of conduit in Section 26 05 33 "Electrical Raceway Systems." Drawings indicate general arrangement of conduit, fittings, and specialties.

B. Comply with requirements in Section 26 05 26 "Grounding."

3.6 FIELD QUALITY CONTROL

A. Manufacturer's Field Service: Engage a factory-authorized service representative to inspect, test, and adjust components, assemblies, and equipment installations, including connections.

B. Perform tests and inspections.

C. Acceptance Testing Preparation:
   1. Test insulation resistance for each enclosed controller, component, connecting supply, feeder, and control circuit.
   2. Test continuity of each circuit.

D. Tests and Inspections:
   1. Inspect controllers, wiring, components, connections, and equipment installation. Test and adjust controllers, components, and equipment.
   2. Test insulation resistance for each enclosed controller element, component, connecting motor supply, feeder, and control circuits.
   3. Test continuity of each circuit.
   4. Verify that voltages at controller locations are within 10 percent of motor nameplate rated voltages. If outside this range for any motor, notify Engineer before starting the motor(s).
   5. Test each motor for proper phase rotation.
   6. Perform each electrical test and visual an mechanical inspection stated in NETA Acceptance Testing Specification. Certify compliance with test parameters.
   7. Correct malfunctioning units on-site, where possible, and retest to demonstrate compliance; otherwise, replace with new units and retest.
   8. Perform the following infrared (thermographic) scan tests and inspections and prepare reports:
      a. Initial Infrared Scanning: After Substantial Completion, but not more than 60 days after Final Acceptance, perform an infrared scan of each multipole enclosed controller. Remove front panels so joints and connections are accessible to portable scanner.
      b. Follow-up Infrared Scanning: Perform an additional follow-up infrared scan of each multipole enclosed controller 11 months after date of Substantial Completion.
      c. Instruments and Equipment: Use an infrared scanning device designed to measure temperature or to detect significant deviations from normal values. Provide calibration record for device.
   9. Test and adjust controls, remote monitoring, and safeties. Replace damaged and malfunctioning controls and equipment.
   10. Mark up a set of manufacturer's drawings with all field modifications incorporated during construction and return to manufacturer for inclusion in Record Drawings.

E. Enclosed controllers will be considered defective if they do not pass tests and inspections.

F. Prepare test and inspection reports, including a certified report that identifies enclosed controllers and that describes scanning results. Include notation of deficiencies detected, remedial action taken, and observations after remedial action.

3.7 STARTUP SERVICE

A. Engage a factory-authorized service representative to perform startup service.

1. Complete installation and startup checks according to manufacturer's written instructions.

3.8 ADJUSTING

A. Set field-adjustable switches, auxiliary relays, and overload-relay pickup and trip ranges.

B. Program microprocessors in VFDs for required operational sequences, status indications, alarms, event recording, and display features. Clear events memory after final acceptance testing and prior to Substantial Completion.

3.9 PROTECTION

A. Temporary Heating: Apply temporary heat to maintain temperature according to manufacturer's written instructions until enclosed controllers are ready to be energized and placed into service.

B. Replace controllers whose interiors have been exposed to water or other liquids prior to Substantial Completion.

3.10 DEMONSTRATION

A. Engage a factory-authorized service representative to train Owner's maintenance personnel to adjust, operate, and maintain enclosed controllers.

END OF SECTION

SECTION 26 2816 - ENCLOSED SWITCHES AND CIRCUIT BREAKERS

PART 1 – GENERAL

1.1 RELATED DOCUMENTS

A. Drawings and general provisions of the Contract, including General and Supplementary Conditions and Other Division 01 Specification Sections, apply to this Section.

1.2 SUMMARY

A. Section Includes:
   1. Nonfusible switches.
   2. Shunt trip switches.
   3. Enclosures.

1.3 DEFINITIONS

A. NC: Normally closed.

B. NO: Normally open.

C. SPDT: Single pole, double throw.

1.4 ACTION SUBMITTALS

A. Product Data: For each type of enclosed switch, circuit breaker, accessory, and component indicated. Include nameplate ratings, dimensioned elevations, sections, weights, and manufacturers' technical data on features, performance, electrical characteristics, ratings, accessories, and finishes.
   1. Enclosure types and details for types other than NEMA 250, Type 1.
   2. Current and voltage ratings.
   3. Short-circuit current ratings (interrupting and withstand, as appropriate).
   4. Detail features, characteristics, ratings, and factory settings of individual overcurrent protective devices, accessories, and auxiliary components.

B. Shop Drawings: For enclosed switches and circuit breakers.
   1. Include plans, elevations, sections, details, and attachments to other work.
   2. Include wiring diagrams for power, signal, and control wiring.

1.5 CLOSEOUT SUBMITTALS

A. Operation and Maintenance Data: For enclosed switches and circuit breakers to include in emergency, operation, and maintenance manuals. Include the following:
   1. Manufacturer's written instructions for testing and adjusting enclosed switches and circuit breakers.

1.6 MAINTENANCE MATERIAL SUBMITTALS

A. Furnish extra materials that match products installed and that are packaged with protective covering for storage and identified with labels describing contents.
   1. Fuses: Equal to 10 percent of quantity installed for each size and type, but no fewer than three of each size and type.
   2. Fuse Pullers: Two for each size and type.

1.7 QUALITY ASSURANCE

A. Testing Agency Qualifications: Accredited by NETA.

1. Testing Agency's Field Supervisor: Currently certified by NETA to supervise on-site testing.

1.8 FIELD CONDITIONS

A. Environmental Limitations: Rate equipment for continuous operation under the following conditions unless otherwise indicated:
   1. Ambient Temperature: Not less than minus 22 deg F (minus 30 deg C) and not exceeding 104 deg F (40 deg C).
   2. Altitude: Not exceeding 6600 feet (2010 m).

1.9 COORDINATION

A. Coordinate layout and installation of switches, circuit breakers, and components with equipment served and adjacent surfaces. Maintain required workspace clearances and required clearances for equipment access doors and panels.

1.10 WARRANTY

A. Manufacturer's Warranty: Manufacturer and Installer agree to repair or replace components that fail in materials or workmanship within specified warranty period.

B. Warranty Period: One year(s) from date of Substantial Completion.

PART 2 - PRODUCTS

2.1 FUSIBLE SWITCHES

A. Manufacturers: Subject to compliance with requirements, available manufacturers offering products that may be incorporated into the Work include, but are not limited to, the following:
   1. Eaton Electrical Inc.; Cutler-Hammer Business Unit.
   2. General Electric Company; GE Consumer & Industrial - Electrical Distribution.
   3. Siemens Energy & Automation, Inc.
   4. Square D; a brand of Schneider Electric.

B. Type HD, Heavy Duty, Single Throw, 600-V ac, 1200 A and Smaller: UL 98 and NEMA KS 1, horsepower rated, with clips or bolt pads to accommodate fuses, lockable handle with capability to accept three padlocks, and interlocked with cover in closed position.

C. Accessories:
   1. Equipment Ground Kit: Internally mounted and labeled for copper ground conductors.
   2. Neutral Kit: Internally mounted; insulated, capable of being grounded and bonded; labeled for copper neutral conductors.
   3. Class R Fuse Kit: Provides rejection of other fuse types when Class R fuses are specified.
   4. Hookstick Handle: Allows use of a hookstick to operate the handle.
   5. Lugs: Mechanical type, suitable for number, size, and conductor material.

2.2 NONFUSIBLE SWITCHES

A. Manufacturers: Subject to compliance with requirements, available manufacturers offering products that may be incorporated into the Work include, but are not limited to, the following:
   1. Eaton Electrical Inc.; Cutler-Hammer Business Unit.

2. General Electric Company; GE Consumer & Industrial - Electrical Distribution.
3. Siemens Energy & Automation, Inc.
4. Square D; a brand of Schneider Electric.

B. Type HD, Heavy Duty, Single Throw, 600-V ac, 1200 A and Smaller: UL 98 and NEMA KS 1, horsepower rated, lockable handle with capability to accept three padlocks, and interlocked with cover in closed position.

C. Accessories:
1. Equipment Ground Kit: Internally mounted and labeled for copper and aluminum ground conductors.
2. Neutral Kit: Internally mounted; insulated, capable of being grounded and bonded; labeled for copper and aluminum neutral conductors.
3. Hookstick Handle: Allows use of a hookstick to operate the handle.
4. Lugs: Mechanical type, suitable for number, size, and conductor material.

2.3 MOLDED-CASE CIRCUIT BREAKERS

A. Manufacturers: Subject to compliance with requirements, available manufacturers offering products that may be incorporated into the Work include, but are not limited to, the following:
1. Eaton Electrical Inc.; Cutler-Hammer Business Unit.
2. General Electric Company; GE Consumer & Industrial - Electrical Distribution.
3. Siemens Energy & Automation, Inc.
4. Square D; a brand of Schneider Electric.

B. General Requirements: Comply with UL 489, NEMA AB 1, and NEMA AB 3, with interrupting capacity to comply with available fault currents.

C. Thermal-Magnetic Circuit Breakers: Inverse time-current element for low-level overloads and instantaneous magnetic trip element for short circuits. Adjustable magnetic trip setting for circuit-breaker frame sizes 250 A and larger.

D. Ground-Fault, Equipment-Protection (GFEP) Circuit Breakers: With Class B ground-fault protection (30-mA trip).

E. Features and Accessories:
1. Standard frame sizes, trip ratings, and number of poles.
2. Lugs: Mechanical type, suitable for number, size, trip ratings, and conductor material.
3. Application Listing: Appropriate for application;
4. Ground-Fault Protection: Comply with UL 1053; integrally mounted, self-powered type with mechanical ground-fault indicator, push-to-test feature.

2.4 MOLDED-CASE SWITCHES

A. Manufacturers: Subject to compliance with requirements, available manufacturers offering products that may be incorporated into the Work include, but are not limited to, the following:
1. Eaton Electrical Inc.; Cutler-Hammer Business Unit.
2. General Electric Company; GE Consumer & Industrial - Electrical Distribution.
3. Siemens Energy & Automation, Inc.
4. Square D; a brand of Schneider Electric.

B. General Requirements: MCCB with fixed, high-set instantaneous trip only, and short-circuit withstand rating equal to equivalent breaker frame size interrupting rating.

C. Features and Accessories:
   1. Standard frame sizes and number of poles.
   2. Lugs: Mechanical type, suitable for number, size, trip ratings, and conductor material.

2.5 ENCLOSURES

A. Enclosed Switches and Circuit Breakers: NEMA AB 1, NEMA KS 1, NEMA 250, and UL 50, to comply with environmental conditions at installed location.
   1. Indoor, Dry and Clean Locations: NEMA 250, Type 1.
   2. Outdoor Locations: NEMA 250, Type 3R.

PART 3 - EXECUTION

3.1 EXAMINATION

A. Examine elements and surfaces to receive enclosed switches and circuit breakers for compliance with installation tolerances and other conditions affecting performance of the Work.

B. Proceed with installation only after unsatisfactory conditions have been corrected.
   1. Commencement of work shall indicate Installer's acceptance of the areas and conditions as satisfactory.

3.2 PREPARATION

A. Interruption of Existing Electric Service: Do not interrupt electric service to facilities occupied by Owner or others unless permitted under the following conditions and then only after arranging to provide temporary electric service according to requirements indicated:
   1. Notify Construction Manager no fewer than seven days in advance of proposed interruption of electric service.
   2. Indicate method of providing temporary electric service.
   3. Do not proceed with interruption of electric service without Construction Manager's written permission.
   4. Comply with NFPA 70E.

3.3 ENCLOSURE ENVIRONMENTAL RATING APPLICATIONS

A. Enclosed Switches and Circuit Breakers: Provide enclosures at installed locations with the following environmental ratings.
   1. Indoor, Dry and Clean Locations: NEMA 250, Type 12.
   2. Outdoor Locations: NEMA 250, Type 4X.
   3. Wash-Down Areas: NEMA 250, Type 4X, stainless steel.
   4. Other Wet or Damp, Indoor Locations: NEMA 250, Type 4, stainless steel.
   5. Indoor Locations Subject to Dust, Falling Dirt, and Dripping Noncorrosive Liquids: NEMA 250, Type 12.

3.4 INSTALLATION

A. Coordinate layout and installation of switches, circuit breakers, and components with equipment served and adjacent surfaces. Maintain required workspace clearances and required clearances for equipment access doors and panels.

B. Install individual wall-mounted switches and circuit breakers with tops at uniform height unless otherwise indicated.

C. Comply with mounting and anchoring requirements specified in Section 260548.16 "Seismic Controls for Electrical Systems."

D. Temporary Lifting Provisions: Remove temporary lifting of eyes, channels, and brackets and temporary blocking of moving parts from enclosures and components.

E. Install fuses in fusible devices.

F. Comply with NFPA 70 and NECA 1.

3.5 IDENTIFICATION

A. Comply with requirements in Section 26 05 53 "Identification for Electrical Systems."
   1. Identify field-installed conductors, interconnecting wiring, and components; provide warning signs.
   2. Label each enclosure with engraved metal or laminated-plastic nameplate.

3.6 FIELD QUALITY CONTROL

A. Testing Agency: Owner will engage a qualified testing agency to perform tests and inspections.

B. Testing Agency: Engage a qualified testing agency to perform tests and inspections.

C. Manufacturer's Field Service: Engage a factory-authorized service representative to test and inspect components, assemblies, and equipment installations, including connections.

D. Perform tests and inspections.

E. Tests and Inspections for Switches:
   1. Visual and Mechanical Inspection:
      a. Inspect physical and mechanical condition.
      b. Inspect anchorage, alignment, grounding, and clearances.
      c. Verify that the unit is clean.
      d. Verify blade alignment, blade penetration, travel stops, and mechanical operation.
      e. Verify that fuse sizes and types match the Specifications and Drawings.
      f. Verify that each fuse has adequate mechanical support and contact integrity.
      g. Inspect bolted electrical connections for high resistance using one of the two following methods:
         1) Use a low-resistance ohmmeter.
            a) Compare bolted connection resistance values to values of similar connections. Investigate values that deviate from those of similar bolted connections by more than 50 percent of the lowest value.
         2) Verify tightness of accessible bolted electrical connections by calibrated torque-wrench method in accordance with manufacturer's published data or NETA ATS Table 100.12.
            a) Bolt-torque levels shall be in accordance with manufacturer's published data. In the absence of manufacturer's published data, use NETA ATS Table 100.12.
      h. Verify that operation and sequencing of interlocking systems is as described in the Specifications and shown on the Drawings.
      i. Verify correct phase barrier installation.

j. Verify lubrication of moving current-carrying parts and moving and sliding surfaces.

2. Electrical Tests:
   a. Perform resistance measurements through bolted connections with a low-resistance ohmmeter. Compare bolted connection resistance values to values of similar connections. Investigate values that deviate from adjacent poles or similar switches by more than 50 percent of the lowest value.
   b. Measure contact resistance across each switchblade fuseholder. Drop values shall not exceed the high level of the manufacturer's published data. If manufacturer's published data are not available, investigate values that deviate from adjacent poles or similar switches by more than 50 percent of the lowest value.
   c. Perform insulation-resistance tests for one minute on each pole, phase-to-phase and phase-to-ground with switch closed, and across each open pole. Apply voltage in accordance with manufacturer's published data. In the absence of manufacturer's published data, use Table 100.1 from the NETA ATS. Investigate values of insulation resistance less than those published in Table 100.1 or as recommended in manufacturer's published data.
   d. Measure fuse resistance. Investigate fuse-resistance values that deviate from each other by more than 15 percent.
   e. Perform ground fault test according to NETA ATS 7.14 "Ground Fault Protection Systems, Low-Voltage."

F. Tests and Inspections for Molded Case Circuit Breakers:
   1. Visual and Mechanical Inspection:
      a. Verify that equipment nameplate data are as described in the Specifications and shown on the Drawings.
      b. Inspect physical and mechanical condition.
      c. Inspect anchorage, alignment, grounding, and clearances.
      d. Verify that the unit is clean.
      e. Operate the circuit breaker to ensure smooth operation.
      f. Inspect bolted electrical connections for high resistance using one of the two following methods:
         1) Use a low-resistance ohmmeter.
            a) Compare bolted connection resistance values to values of similar connections. Investigate values that deviate from those of similar bolted connections by more than 50 percent of the lowest value.

         2) Verify tightness of accessible bolted electrical connections by calibrated torque-wrench method in accordance with manufacturer's published data or NETA ATS Table 100.12.
            a) Bolt-torque levels shall be in accordance with manufacturer's published data. In the absence of manufacturer's published data, use NETA ATS Table 100.12.

      g. Inspect operating mechanism, contacts, and chutes in unsealed units.
      h. Perform adjustments for final protective device settings in accordance with the coordination study.

2. Electrical Tests:
   a. Perform resistance measurements through bolted connections with a low-resistance ohmmeter. Compare bolted connection resistance values to values of similar connections. Investigate values that deviate from adjacent poles or similar switches by more than 50 percent of the lowest value.
   b. Perform insulation-resistance tests for one minute on each pole, phase-to-phase and phase-to-ground with circuit breaker closed, and across each open pole. Apply voltage in accordance with manufacturer's published data. In the absence of manufacturer's published data, use Table 100.1 from the NETA ATS. Investigate values of insulation resistance less than those published in Table 100.1 or as recommended in manufacturer's published data.
   c. Perform a contact/pole resistance test. Drop values shall not exceed the high level of the manufacturer's published data. If manufacturer's published data are not available, investigate values that deviate from adjacent poles or similar switches by more than 50 percent of the lowest value.
   d. Perform insulation resistance tests on all control wiring with respect to ground. Applied potential shall be 500-V dc for 300-V rated cable and 1000-V dc for 600-V rated cable. Test duration shall be one minute. For units with solid state components, follow manufacturer's recommendation. Insulation resistance values shall be no less than two megohms.
   e. Determine the following by primary current injection:
      1) Long-time pickup and delay. Pickup values shall be as specified. Trip characteristics shall not exceed manufacturer's published time-current characteristic tolerance band, including adjustment factors.
      2) Short-time pickup and delay. Short-time pickup values shall be as specified. Trip characteristics shall not exceed manufacturer's published time-current characteristic tolerance band, including adjustment factors.
      3) Ground-fault pickup and time delay. Ground-fault pickup values shall be as specified. Trip characteristics shall not exceed manufacturer's published time-current characteristic tolerance band, including adjustment factors.
      4) Instantaneous pickup. Instantaneous pickup values shall be as specified and within manufacturer's published tolerances.
   f. Test functionality of the trip unit by means of primary current injection. Pickup values and trip characteristics shall be as specified and within manufacturer's published tolerances.
   g. Perform minimum pickup voltage tests on shunt trip and close coils in accordance with manufacturer's published data. Minimum pickup voltage of the shunt trip and close coils shall be as indicated by manufacturer.
   h. Verify correct operation of auxiliary features such as trip and pickup indicators; zone interlocking; electrical close and trip operation; trip-free, anti-pump function; and trip unit battery condition. Reset all trip logs and indicators. Investigate units that do not function as designed.
   i. Verify operation of charging mechanism. Investigate units that do not function as designed.

3. Correct malfunctioning units on-site, where possible, and retest to demonstrate compliance; otherwise, replace with new units and retest.

4. Test and adjust controls, remote monitoring, and safeties. Replace damaged and malfunctioning controls and equipment.

G. Enclosed switches and circuit breakers will be considered defective if they do not pass tests and inspections.

H. Prepare test and inspection reports.
1. Test procedures used.
2. Include identification of each enclosed switch and circuit breaker tested and describe test results.
3. List deficiencies detected, remedial action taken, and observations after remedial action.

3.7 ADJUSTING

A. Adjust moving parts and operable components to function smoothly and lubricate as recommended by manufacturer.

B. Set field-adjustable circuit-breaker trip ranges as specified to values indicated on the Drawings.

END OF SECTION

SECTION 26 29 13 - ENCLOSED CONTROLLERS

PART 1 - GENERAL

1.1 RELATED DOCUMENTS

A. Drawings and general provisions of the Contract, including General and Supplementary Conditions and Division 01 Specification Sections, apply to this Section.

1.2 SUMMARY

A. Section includes the following enclosed controllers rated 600 V and less:

1. Full-voltage manual.
2. Full-voltage magnetic.

B. Related Section:

1. Section 26 29 23 "Variable Frequency Drives" for general-purpose, ac, adjustable-frequency, pulse-width-modulated controllers for use on variable torque loads in ranges up to 200 hp.

1.3 DEFINITIONS

A. CPT: Control power transformer.

B. MCCB: Molded-case circuit breaker.

C. MCP: Motor circuit protector.

D. N.C.: Normally closed.

E. N.O.: Normally open.

F. OCPD: Overcurrent protective device.

G. SCR: Silicon-controlled rectifier.

1.4 ACTION SUBMITTALS

A. Product Data: For each type of enclosed controller. Include manufacturer's technical data on features, performance, electrical characteristics, ratings, and enclosure types and finishes.

B. Shop Drawings: For each enclosed controller. Include dimensioned plans, elevations, sections, details, and required clearances and service spaces around controller enclosures.

1. Show tabulations of the following:
   a. Each installed unit's type and details.
   b. Factory-installed devices.
   c. Nameplate legends.
   d. Short-circuit current rating of integrated unit.
   e. Features, characteristics, ratings, and factory settings of individual OCPDs in combination controllers.
2. Wiring Diagrams: For power, signal, and control wiring.

1.5 INFORMATIONAL SUBMITTALS

A. Field quality-control reports.

B. Load-Current and List of Settings of Adjustable Overload Relays: Compile after motors have been installed, and arrange to demonstrate that switch settings for motor running overload protection suit actual motors to be protected.

1.6 CLOSEOUT SUBMITTALS

A. Operation and Maintenance Data: For enclosed controllers to include in emergency, operation, and maintenance manuals. Include the following:
   1. Routine maintenance requirements for enclosed controllers and installed components.
   2. Manufacturer's written instructions for testing and adjusting circuit breaker and MCP trip settings.
   3. Manufacturer's written instructions for setting field-adjustable overload relays.

1.7 QUALITY ASSURANCE

A. Electrical Components, Devices, and Accessories: Listed and labeled as defined in NFPA 70, by a qualified testing agency, and marked for intended location and application.

B. Comply with NFPA 70.

1.8 DELIVERY, STORAGE, AND HANDLING

A. Store enclosed controllers indoors in clean, dry space with uniform temperature to prevent condensation. Protect enclosed controllers from exposure to dirt, fumes, water, corrosive substances, and physical damage.

1.9 PROJECT CONDITIONS

A. Environmental Limitations: Rate equipment for continuous operation under the following conditions unless otherwise indicated:
   1. Ambient Temperature: Not less than minus 22 deg F (minus 30 deg C) and not exceeding 104 deg F (40 deg C).
   2. Altitude: Not exceeding 6600 feet (2010 m).

1.10 COORDINATION

A. Coordinate layout and installation of enclosed controllers with other construction including conduit, piping, equipment, and adjacent surfaces. Maintain required workspace clearances and required clearances for equipment access doors and panels.

PART 2 - PRODUCTS

2.1 FULL-VOLTAGE CONTROLLERS

A. General Requirements for Full-Voltage Controllers: Comply with NEMA ICS 2, general purpose, Class A.

B. Motor-Starting Switches: "Quick-make, quick-break" toggle or push-button action; marked to show whether unit is off or on.
   1. Manufacturers: Subject to compliance with requirements, available manufacturers offering products that may be incorporated into the Work include, but are not limited to, the following:
      a. Eaton Electrical Inc.; Cutler-Hammer Business Unit.
      b. General Electric Company; GE Consumer & Industrial - Electrical Distribution.
      c. Rockwell Automation, Inc.; Allen-Bradley brand.
      d. Siemens Energy & Automation, Inc.
      e. Square D; a brand of Schneider Electric.
   2. Configuration: Nonreversing.

3. Surface mounting.
4. Red pilot light.

C. Magnetic Controllers: Full voltage, across the line, electrically held.

1. Manufacturers: Subject to compliance with requirements, available manufacturers offering products that may be incorporated into the Work include, but are not limited to, the following:
   a. Eaton Electrical Inc.; Cutler-Hammer Business Unit.
   b. General Electric Company; GE Consumer & Industrial - Electrical Distribution.
   c. Rockwell Automation, Inc.; Allen-Bradley brand.
   d. Siemens Energy & Automation, Inc.
   e. Square D; a brand of Schneider Electric.

2. Configuration: Nonreversing.
3. Contactor Coils: Pressure-encapsulated type.
   a. Operating Voltage: Depending on contactor NEMA size and line-voltage rating, manufacturer's standard matching control power or line voltage.

4. Power Contacts: Totally enclosed, double-break, silver-cadmium oxide; assembled to allow inspection and replacement without disturbing line or load wiring.

5. Control Circuits: 120-V ac.

6. Solid-State Overload Relay:
   a. Switch or dial selectable for motor running overload protection.
   b. Sensors in each phase.
   c. Class 10 tripping characteristic selected to protect motor against voltage and current unbalance and single phasing.

7. N.C., isolated overload alarm contact.
8. External overload reset push button.

D. Combination Magnetic Controller: Factory-assembled combination of magnetic controller, OCPD, and disconnecting means.
1. Manufacturers: Subject to compliance with requirements, available manufacturers offering products that may be incorporated into the Work include, but are not limited to, the following:
   a. Eaton Electrical Inc.; Cutler-Hammer Business Unit.
   b. General Electric Company; GE Consumer & Industrial - Electrical Distribution.
   c. Rockwell Automation, Inc.; Allen-Bradley brand.
   d. Siemens Energy & Automation, Inc.
   e. Square D; a brand of Schneider Electric.

2. Fusible Disconnecting Means:
   a. NEMA KS 1, heavy-duty, horsepower-rated, fusible switch with clips or bolt pads to accommodate Class R fuses.
   b. Lockable Handle: Accepts three padlocks and interlocks with cover in closed position.

3. Nonfusible Disconnecting Means:
   a. NEMA KS 1, heavy-duty, horsepower-rated, nonfusible switch.
   b. Lockable Handle: Accepts three padlocks and interlocks with cover in closed position.

c. Auxiliary Contacts: N.O./N.C., arranged to activate before switch blades open.

4. MCP Disconnecting Means:
   a. UL 489, NEMA AB 1, and NEMA AB 3, with interrupting capacity to comply with available fault currents, instantaneous-only circuit breaker with front-mounted, field-adjustable, short-circuit trip coordinated with motor locked-rotor amperes.
   b. Lockable Handle: Accepts three padlocks and interlocks with cover in closed position.

5. MCCB Disconnecting Means:
   a. UL 489, NEMA AB 1, and NEMA AB 3, with interrupting capacity to comply with available fault currents; thermal-magnetic MCCB, with inverse time-current element for low-level overloads and instantaneous magnetic trip element for short circuits.
   b. Front-mounted, adjustable magnetic trip setting for circuit-breaker frame sizes 250 A and larger.
   c. Lockable Handle: Accepts three padlocks and interlocks with cover in closed position.

2.2 ENCLOSURES

A. Enclosed Controllers: NEMA ICS 6, to comply with environmental conditions at installed location.
   1. Dry and Clean Indoor Locations: Type 1.
   2. Outdoor Locations: Type 3R.

2.3 ACCESSORIES

A. General Requirements for Control Circuit and Pilot Devices: NEMA ICS 5; factory installed in controller enclosure cover unless otherwise indicated.
   1. Push Buttons, Pilot Lights, and Selector Switches: Heavy-duty, oiltight type.
      a. Push Buttons: Unguarded types; momentary as indicated.
      b. Pilot Lights: LED types; colors as indicated, push to test.
      c. Selector Switches: Rotary type.

B. Reversible N.C./N.O. auxiliary contact(s).

PART 3 - EXECUTION

3.1 EXAMINATION

A. Examine areas and surfaces to receive enclosed controllers for compliance with requirements and other conditions affecting performance of the Work.

B. Examine enclosed controllers before installation. Reject enclosed controllers that are wet, moisture damaged, or mold damaged.

C. Proceed with installation only after unsatisfactory conditions have been corrected.

3.2 INSTALLATION

A. Wall-Mounted Controllers: Install enclosed controllers on walls with tops at uniform height unless otherwise indicated, and by bolting units to wall or mounting on lightweight structural- steel channels bolted to wall. For controllers not at walls, provide freestanding racks complying with Section 26 05 29 "Hangers and Supports for Electrical Systems."

B. Install fuses in each fusible-switch enclosed controller.

C. Comply with NECA 1.

3.3 IDENTIFICATION

A. Identify enclosed controllers, components, and control wiring. Comply with requirements for identification specified in Section 26 05 53 "Identification for Electrical Systems."
   1. Identify field-installed conductors, interconnecting wiring, and components; provide warning signs.
   2. Label each enclosure with engraved nameplate.
   3. Label each enclosure-mounted control and pilot device.

3.4 CONTROL WIRING INSTALLATION

A. Install wiring between enclosed controllers and remote devices. Comply with requirements in Section 26 05 23 "Control-Voltage Electrical Power Cables."

B. Bundle, train, and support wiring in enclosures.

C. Connect selector switches and other automatic-control selection devices where applicable.
   1. Connect selector switches to bypass only those manual- and automatic-control devices that have no safety functions when switch is in manual-control position.

3.5 FIELD QUALITY CONTROL

A. Manufacturer's Field Service: Engage a factory-authorized service representative to inspect, test, and adjust components, assemblies, and equipment installations, including connections.

B. Perform tests and inspections.

C. Acceptance Testing Preparation:
   1. Test insulation resistance for each enclosed controller, component, connecting supply, feeder, and control circuit.
   2. Test continuity of each circuit.

D. Tests and Inspections:
   1. Inspect controllers, wiring, components, connections, and equipment installation.
   2. Test insulation resistance for each enclosed-controller element, component, connecting motor supply, feeder, and control circuits.
   3. Test continuity of each circuit.
   4. Verify that voltages at controller locations are within plus or minus 10 percent of motor nameplate rated voltages. If outside this range for any motor, notify Engineer before starting the motor(s).
   5. Test each motor for proper phase rotation.
   6. Perform each electrical test and visual and mechanical inspection stated in NETA Acceptance Testing Specification. Certify compliance with test parameters.

7. Correct malfunctioning units on-site, where possible, and retest to demonstrate compliance; otherwise, replace with new units and retest.
8. Perform the following infrared (thermographic) scan tests and inspections and prepare reports:
    a. Initial Infrared Scanning: After Substantial Completion, but not more than 60 days after Final Acceptance, perform an infrared scan of each multi-pole enclosed controller. Remove front panels so joints and connections are accessible to portable scanner.
    b. Follow-up Infrared Scanning: Perform an additional follow-up infrared scan of each multi-pole enclosed controller 11 months after date of Substantial Completion.
    c. Instruments and Equipment: Use an infrared scanning device designed to measure temperature or to detect significant deviations from normal values. Provide calibration record for device.
9. Test and adjust controls, remote monitoring, and safeties. Replace damaged and malfunctioning controls and equipment.

E. Enclosed controllers will be considered defective if they do not pass tests and inspections.

F. Prepare test and inspection reports including a certified report that identifies enclosed controllers and that describes scanning results. Include notation of deficiencies detected, remedial action taken, and observations after remedial action.

3.6 ADJUSTING

A. Set field-adjustable switches, auxiliary relays, and overload-relay pickup and trip ranges.

3.7 DEMONSTRATION

A. Train Owner's maintenance personnel to adjust, operate, and maintain enclosed controllers.

END OF SECTION

SECTION 26 29 23 - VARIABLE-FREQUENCY DRIVES

PART 1 - GENERAL

1.1 RELATED DOCUMENTS

A. Drawings and general provisions of the Contract, including General and Supplementary Conditions and Division 01 Specification Sections, apply to this Section.

1.2 SUMMARY

A. Section includes separately enclosed, preassembled, combination VFDs, rated 600 V and less, for speed control of three-phase, squirrel-cage induction motors.

1.3 DEFINITIONS

A. CE: Conformity European (European Compliance).

B. CPT: Control power transformer.

C. EMI: Electromagnetic interference.

D. LED: Light-emitting diode.

E. NC: Normally closed.

F. NO: Normally open.

G. OCPD: Overcurrent protective device.

H. PID: Control action, proportional plus integral plus derivative.

I. RFI: Radio-frequency interference.

J. VFD: Variable-frequency drive.

1.4 ACTION SUBMITTALS

A. Product Data: For each type and rating of VFD indicated.
   1. Include dimensions and finishes for VFDs.
   2. Include rated capacities, operating characteristics, electrical characteristics, and furnished specialties and accessories.

B. Shop Drawings: For each VFD indicated.
   1. Include mounting and attachment details.
   2. Include details of equipment assemblies. Indicate dimensions, weights, loads, required clearances, method of field assembly, components, and location and size of each field connection.
   3. Include diagrams for power, signal, and control wiring.

1.5 INFORMATIONAL SUBMITTALS

A. Product Certificates: For each VFD from manufacturer.

B. Harmonic Analysis Report: Provide Project-specific calculations and manufacturer's statement of compliance with IEEE 519.

C. Source quality-control reports.

D. Field quality-control reports.

E. Sample Warranty: For special warranty.

1.6 CLOSEOUT SUBMITTALS

A. Operation and Maintenance Data: For VFDs to include in emergency, operation, and maintenance manuals.
   1. Include the following:
      a. Manufacturer's written instructions for testing and adjusting thermal-magnetic circuit breaker and motor-circuit protector trip settings.
      b. Manufacturer's written instructions for setting field-adjustable overload relays.
      c. Manufacturer's written instructions for testing, adjusting, and reprogramming microprocessor control modules.
      d. Manufacturer's written instructions for setting field-adjustable timers, controls, and status and alarm points.
      e. Load-Current and List of Settings of Adjustable Overload Relays: Compile after motors have been installed, and arrange to demonstrate that switch settings for motor-running overload protection suit actual motors to be protected.

1.7 MAINTENANCE MATERIAL SUBMITTALS

A. Furnish extra materials that match products installed and that are packaged with protective covering for storage and identified with labels describing contents.
   1. Power Fuses: Equal to 10 percent of quantity installed for each size and type, but no fewer than three of each size and type.
   2. Control Power Fuses: Equal to 10 percent of quantity installed for each size and type, but no fewer than two of each size and type.

1.8 DELIVERY, STORAGE, AND HANDLING

A. If stored in space that is not permanently enclosed and air conditioned, remove loose packing and flammable materials from inside controllers and install temporary electric heating, with at least 250 W per controller.

B. Product Selection for Restricted Space: Drawings indicate maximum dimensions for VFDs, including clearances between VFDs, and adjacent surfaces and other items.

1.9 WARRANTY

A. Special Warranty: Manufacturer agrees to repair or replace VFDs that fail in materials or workmanship within specified warranty period.
   1. Warranty Period: One year from date of Substantial Completion.

PART 2 - PRODUCTS

2.1 MANUFACTURERS

A. Manufacturers: Subject to compliance with requirements, provide products by the following:
   1. Rockwell Automation, Inc; Allen-Bradley Brand, or Engineer approved equivalent.

2.2 SYSTEM DESCRIPTION

A. General Requirements for VFDs:
   1. VFDs and Accessories: Listed and labeled as defined in NFPA 70, by a qualified testing agency, and marked for intended location and application.
   2. Comply with NEMA ICS 7, NEMA ICS 61800-2, and UL 508A.

B. Application: variable torque.

C. VFD Description: Variable-frequency drives, consisting of power converter that employs pulse-width-modulated inverter, factory built and tested in an enclosure, with integral disconnecting means and overcurrent and overload protection; listed and labeled by an NRTL as a complete unit; arranged to provide self-protection, protection, and variable-speed control of one three-phase induction motors by adjusting output voltage and frequency.

1. Units suitable for operation of NEMA MG 1, Design A and Design B motors, as defined by NEMA MG 1, Section IV, Part 30, "Application Considerations for Constant Speed Motors Used on a Sinusoidal Bus with Harmonic Content and General-Purpose Motors Used with Adjustable-Voltage or Adjustable-Frequency Controls or Both."
2. Units suitable for operation of inverter-duty motors as defined by NEMA MG 1, Section IV, Part 31, "Definite-Purpose Inverter-Fed Polyphase Motors."
3. Listed and labeled for integrated short-circuit current (withstand) rating by an NRTL acceptable to authorities having jurisdiction.

D. Design and Rating: Match load type; and type of connection used between motor and load such as direct or through a power-transmission connection.

E. Output Rating: Three phase; 10 to 60 Hz, with voltage proportional to frequency throughout voltage range; maximum voltage equals input voltage.

F. Unit Operating Requirements:
1. Input AC Voltage Tolerance: Plus 10 and minus 15 percent of VFD input voltage rating.
2. Input AC Voltage Unbalance: Not exceeding 5 percent.
3. Input Frequency Tolerance: Plus or minus 3 percent of VFD frequency rating.
4. Minimum Efficiency: 96 percent at 60 Hz, full load.
5. Minimum Displacement Primary-Side Power Factor: 96 percent under any load or speed condition.
6. Minimum Short-Circuit Current (Withstand) Rating: 22 kA.
7. Ambient Temperature Rating: Not less than 32 deg F (0 deg C) and not exceeding 104 deg F (40 deg C).
8. Humidity Rating: Less than 95 percent (noncondensing).
9. Altitude Rating: Not exceeding 3300 feet (1000 m).
10. Overload Capability: 1.5 times the base load current for 60 seconds; minimum of 1.8 times the base load current for three seconds.
11. Speed Regulation: Plus or minus 5 percent.
12. Output Carrier Frequency: Selectable; 0.5 to 15 kHz.
13. Stop Modes: Programmable; includes fast, free-wheel, and dc injection braking.

G. Inverter Logic: Microprocessor based, 16 or 32 bit, isolated from all power circuits.

H. Isolated Control Interface: Allows VFDs to follow remote-control signal over a minimum 40:1 speed range.
1. Signal: Electrical.

I. Internal Adjustability Capabilities:
1. Minimum Speed: 5 to 25 percent of maximum rpm.
2. Maximum Speed: 80 to 100 percent of maximum rpm.
3. Acceleration: 0.1 to 999.9 seconds.
4. Deceleration: 0.1 to 999.9 seconds.
5. Current Limit: 30 to minimum of 150 percent of maximum rating.

J. Self-Protection and Reliability Features:
   1. Surge Suppression: Factory installed as an integral part of the VFD, complying with UL 1449 SPD, Type 1 or Type 2.
   2. Loss of Input Signal Protection: Selectable response strategy, including speed default to a percent of the most recent speed, a preset speed, or stop; with alarm.
   3. Under- and overvoltage trips.
   4. Inverter overcurrent trips.
   5. VFD and Motor-Overload/Overtemperature Protection: Microprocessor-based thermal protection system for monitoring VFDs and motor thermal characteristics, and for providing VFD overtemperature and motor-overload alarm and trip; settings selectable via the keypad.
   6. Critical frequency rejection, with three selectable, adjustable deadbands.
   7. Instantaneous line-to-line and line-to-ground overcurrent trips.
   8. Loss-of-phase protection.
   9. Reverse-phase protection.
   10. Short-circuit protection.
   11. Motor-overtemperature fault.

K. Power-Interruption Protection: To prevent motor from re-energizing after a power interruption until motor has stopped.

L. Torque Boost: Automatically varies starting and continuous torque to at least 1.5 times the minimum torque to ensure high-starting torque and increased torque at slow speeds.

M. Motor Temperature Compensation at Slow Speeds: Adjustable current fall-back based on output frequency for temperature protection of self-cooled, fan-ventilated motors at slow speeds.

2.3 PERFORMANCE REQUIREMENTS

A. Seismic Performance: VFDs shall withstand the effects of earthquake motions determined according to ASCE/SEI 7. The designated VFDs shall be tested and certified by an NRTL as meeting the ICC-ES AC 156 test procedure requirements.
   1. The term "withstand" means "the unit will remain in place without separation of any parts when subjected to the seismic forces specified."

2.4 CONTROLS AND INDICATION

A. Status Lights: Door-mounted LED indicators displaying the following conditions.
   1. Run.
   2. External fault.

B. Panel-Mounted Operator Station: Manufacturer's standard front-accessible, sealed keypad and plain-English-language digital display; allows complete programming, program copying, operating, monitoring, and diagnostic capability.
   1. Keypad: In addition to required programming and control keys, include keys for HAND, OFF, and AUTO modes.
   2. Security Access: Provide electronic security access to controls through identification and password with at least three levels of access: View only; view and operate; and view, operate, and service.
      a. Control Authority: Supports at least four conditions: Off, local manual control at VFD, and automatic control through a remote source.

C. Historical Logging Information and Displays:
   1. Real-time clock with current time and date.
   2. Running log of total power versus time.
   3. Total run time.
   4. Fault log, maintaining last four faults with time and date stamp for each.

D. Indicating Devices: Digital display mounted flush in VFD door and connected to display VFD parameters including, but not limited to:
   1. Output frequency (Hz).
   2. Motor speed (rpm).
   3. Motor status (running, stop, fault).
   4. Motor current (amperes).
   5. Motor torque (percent).
   6. Fault or alarming status (code).
   7. PID feedback signal (percent).
   8. DC-link voltage (V dc).
   9. Set point frequency (Hz).
   10. Motor output voltage (V ac).

E. Control Signal Interfaces:
   1. Electric Input Signal Interface:
      a. A minimum of two programmable analog inputs: 4- to 20-mA dc.
      b. A minimum of six multifunction programmable digital inputs.
   2. Remote Signal Inputs: Capability to accept any of the following speed-setting input signals from the PLC or other control systems:
      a. 0- to 10-VDC.
      b. 4- to 20-mA dc.
      c. Potentiometer using up/down digital inputs.
      d. Fixed frequencies using digital inputs.
   3. Output Signal Interface: A minimum of one programmable analog output signal (4- to 20-mA dc), which can be configured for any of the following:
      a. Output frequency (Hz).
      b. Output current (load).
      c. DC-link voltage (DC).
      d. Motor torque (percent).
      e. Motor speed (rpm).
      f. Set point frequency (Hz).
   4. Remote Indication Interface: A minimum of two programmable dry-circuit relay outputs (120-VAC, 1 A) for remote indication of the following:
      a. Motor running.
      b. Set point speed reached.
      c. Fault and warning indication (overtemperature or overcurrent).
      d. PID high- or low-speed limits reached.
   5. Ethernet/IP Communications: Capability to accept control signals and provide status feedback over Ethernet/IP protocol, including but not limited to, the following:
      a. Speed control.
      b. Start / Stop control.
      c. Ramp rate control.
      d. Run status.
      e. Fault status.
      f. Amperage draw.

F. PLC Interface: Factory-installed hardware and software shall interface with PLC to monitor,

control, display, and record data for use in processing reports. VFD settings shall be retained within VFD's nonvolatile memory.

2.5 LINE CONDITIONING AND FILTERING

A. Input Line Conditioning: Based on the manufacturer's harmonic analysis study and report, provide input filtering, as required, to limit total demand (harmonic current) distortion and total harmonic voltage demand at the defined point of common coupling to meet IEEE 519 recommendations.

B. Output Filtering: Coordinate with the pump motor manufacturer.

2.6 ENCLOSURES

A. VFD Enclosures: NEMA 250, to comply with environmental conditions at installed location.
   1. Indoor Locations Subject to Dust, Falling Dirt, and Dripping Noncorrosive Liquids: Type 12.

2.7 ACCESSORIES

A. General Requirements for Control-Circuit and Pilot Devices: NEMA ICS 5; factory installed in VFD enclosure cover unless otherwise indicated.
   1. Push Buttons: Shielded.
   2. Pilot Lights: LED, Push to test.

B. Control Relays: Auxiliary and adjustable solid-state time-delay relays.

C. Cooling Fan and Exhaust System: For NEMA 250, Type 12; UL 508 component recognized: Supply fan, with stainless-steel intake and exhaust grills; 120-V ac; obtained from separate source of control power.

D. Spare control-wiring terminal blocks; wired.

2.8 SOURCE QUALITY CONTROL

A. Testing: Test and inspect VFDs according to requirements in NEMA ICS 61800-2.
   1. Test each VFD while connected to a motor that is comparable to that for which the VFD is rated.
   2. Verification of Performance: Rate VFDs according to operation of functions and features specified.

B. VFDs will be considered defective if they do not pass tests and inspections.

C. Prepare test and inspection reports.

PART 3 - EXECUTION

3.1 EXAMINATION

A. Examine areas, surfaces, and substrates to receive VFDs, with Installer present, for compliance with requirements for installation tolerances, and other conditions affecting performance of the Work.

B. Examine VFD before installation. Reject VFDs that are wet, moisture damaged, or mold damaged.

C. Examine roughing-in for conduit systems to verify actual locations of conduit connections before VFD installation.

D. Proceed with installation only after unsatisfactory conditions have been corrected.

3.2 INSTALLATION

A. Install fuses in each fusible-switch VFD.

B. Install, connect, and fuse thermal-protector monitoring relays furnished with motor-driven equipment.

C. Comply with NECA 1.

3.3 CONTROL WIRING INSTALLATION

A. Install wiring between VFDs and remote devices. Comply with requirements in Section 26 05 23 "Control-Voltage Electrical Power Cables."

B. Bundle, train, and support wiring in enclosures.

C. Connect selector switches and other automatic-control devices where applicable.
   1. Connect selector switches to bypass only those manual- and automatic-control devices that have no safety functions when switches are in manual-control position.
   2. Connect selector switches with control circuit in both manual and automatic positions for safety-type control devices such as low- and high-pressure cutouts, high-temperature cutouts, and motor-overload protectors.

3.4 IDENTIFICATION

A. Identify VFDs, components, and control wiring. Comply with requirements for identification specified in Section 26 05 53 "Identification for Electrical Systems."
   1. Identify field-installed conductors, interconnecting wiring, and components; provide warning signs.
   2. Label each VFD with engraved nameplate.
   3. Label each enclosure-mounted control and pilot device.

B. Operating Instructions: Frame printed operating instructions for VFDs, including control sequences and emergency procedures. Cover instructions with clear acrylic plastic. Mount on front of VFD units.

3.5 FIELD QUALITY CONTROL

A. Manufacturer's Field Service: Engage a factory-authorized service representative to test and inspect components, assemblies, and equipment installations, including connections.

B. Acceptance Testing Preparation:
   1. Test insulation resistance for each VFD element, bus, component, connecting supply, feeder, and control circuit.
   2. Test continuity of each circuit.

C. Tests and Inspections:
   1. Inspect VFD, wiring, components, connections, and equipment installation. Test and adjust controllers, components, and equipment.
   2. Test insulation resistance for each VFD element, component, connecting motor supply, feeder, and control circuits.

3. Test continuity of each circuit.
4. Verify that voltages at VFD locations are within 10 percent of motor nameplate rated voltages. If outside this range for any motor, notify Engineer before starting the motor(s).
5. Test each motor for proper phase rotation.
6. Perform tests according to the Inspection and Test Procedures for Adjustable Speed Drives stated in NETA Acceptance Testing Specification. Certify compliance with test parameters.
7. Correct malfunctioning units on-site, where possible, and retest to demonstrate compliance; otherwise, replace with new units and retest.
8. Perform the following infrared (thermographic) scan tests and inspections, and prepare reports:
    a. Initial Infrared Scanning: After Substantial Completion, but not more than 60 days after Final Acceptance, perform an infrared scan of each VFD. Remove front panels so joints and connections are accessible to portable scanner.
    b. Follow-up Infrared Scanning: Perform an additional follow-up infrared scan of each VFD 11 months after date of Substantial Completion.
    c. Instruments and Equipment: Use an infrared scanning device designed to measure temperature or to detect significant deviations from normal values. Provide calibration record for device.
9. Test and adjust controls, remote monitoring, and safeties. Replace damaged and malfunctioning controls and equipment.

D. VFDs will be considered defective if they do not pass tests and inspections.

E. Prepare test and inspection reports, including a certified report that identifies the VFD and describes scanning results. Include notation of deficiencies detected, remedial action taken, and observations made after remedial action.

3.6 STARTUP SERVICE

A. Engage a factory-authorized service representative to perform startup service.
1. Complete installation and startup checks according to manufacturer's written instructions.

3.7 ADJUSTING

A. Program microprocessors for required operational sequences, status indications, alarms, event recording, and display features. Clear events memory after final acceptance testing and prior to Substantial Completion.

B. Program VFD for automatic operation with programmable logic control. Include PID loop settings.

C. Set field-adjustable switches, auxiliary relays, time-delay relays, timers, and overload-relay pickup and trip ranges.

D. Adjust the trip settings of instantaneous-only circuit breakers and thermal-magnetic circuit breakers with adjustable, instantaneous trip elements. Initially adjust to 6 times the motor nameplate full-load amperes and attempt to start motors several times, allowing for motor cool- down between starts. If tripping occurs on motor inrush, adjust settings in increments until motors start without tripping. Do not exceed 8 times the motor full-load amperes (or 11 times for NEMA Premium Efficient motors if required). Where these maximum settings do not allow starting of a motor, notify Engineer before increasing settings.

E. Set field-adjustable circuit-breaker trip ranges.

3.8 PROTECTION

A. Temporary Heating: Apply temporary heat to maintain temperature according to manufacturer's written instructions until controllers are ready to be energized and placed into service.

B. Replace VFDs whose interiors have been exposed to water or other liquids prior to Substantial Completion.

3.9 DEMONSTRATION

A. System Integrator shall train Owner's maintenance personnel to adjust, operate, reprogram, and maintain VFDs.

END OF SECTION

SECTION 26 32 13 – DIESEL-ENGINE-DRIVEN GENERATOR SETS

PART 1 – GENERAL

1.1 RELATED DOCUMENTS

A. Drawings and general provisions of the Contract, including General Conditions and Division 01 Specification Sections, apply to this Section.

1.2 SUMMARY

A. This Section includes providing and installing a packaged engine-generator set suitable for use in mission critical applications with the features as specified and indicated. The engine generator will be used as the Standby power source for the system, but shall be capable of providing reliable power with no run-time limitations while the primary source of power is unavailable.

1.3 QUALITY ASSURANCE

A. Installer Qualifications: Manufacturer's authorized representative who is trained and approved for installation of units required for this Project.

B. Manufacturer Qualifications: A qualified manufacturer having produced similar products for a minimum of ten years. Maintain, within 350 miles from project site, a service center capable of providing training, parts, and emergency maintenance repairs.

C. Source Limitations: Obtain packaged generator sets and auxiliary components through one source from a single manufacturer.

D. Comply with NFPA 37 (Standard for the Installation and Use of Stationary Combustion Engines and Gas Turbines).

E. Comply with NFPA 70 (National Electrical Code. Equipment shall be suitable for use in systems in compliance to Article 700, 701, and 702).

F. Comply with NFPA 110 (Emergency and Standby Power Systems) requirements for Level 2 standby power supply system.

1.4 SUBMITTALS

A. Engine-generator submittals shall include the following information:

B. Factory published specification sheet.

C. Manufacturer's catalog cut sheets of all auxiliary components such as battery charger, control panel, enclosure, etc.

D. Dimensional elevation and layout drawings of the generator set, enclosure and transfer switchgear and related accessories.

E. Weights of all equipment.

F. Concrete pad recommendation, layout and stub-up locations of electrical and fuel systems.

G. Interconnect wiring diagram of complete emergency system, including generator, switchgear, day tank, remote pumps, battery charger, control panel, and remote alarm indications.

H. Engine mechanical data, including heat rejection, exhaust gas flows, combustion air and ventilation air flows, fuel consumption, etc.

I. Generator electrical data including temperature and insulation data, cooling requirements, excitation ratings, voltage regulation, voltage regulator, efficiencies, waveform distortion and telephone influence factor.

J. Generator resistances, reactance and time constants.

K. Generator locked rotor motor starting curves.

L. Manufacturer's documentation showing maximum expected transient voltage and frequency dips, and recovery time during operation of the generator set at the specified site conditions with the specified loads.

M. Manufacturer's and dealer's written warranty.

N. Certifications:
   1. Submit statement of compliance which states the proposed product(s) is certified to the emissions standards required by the location for EPA, stationary non-emergency application.

1.5 WARRANTY

A. Standard Warranty: The manufacturer's standard warranty shall in no event be for a period of less than two years from date of initial start-up of the system and shall include repair parts, labor, reasonable travel expense necessary for repairs at the job site, and expendables (lubricating oil, filters, antifreeze, and other service items made unusable by the defect) used during the course of repair. Running hours shall be limited to 500 hours annually for the system warranty by both the manufacturer and servicing distributor. Submittals received without written warranties as specified will be rejected in their entirety.

B. Extended Warranty: Manufacturer shall include extended coverage of 3 years from date of registered commissioning and start-up and shall include no deductible. This coverage provides for 100 percent of usual and customary parts and labor costs for failures due to defects in materials and workmanship to the “as shipped consist” from the factory, excluding filters, fluids, vee belts, hoses, power take-offs, paint, batteries and clutches. Extended Warranty provides for a rental power unit due to unscheduled failures causing unexpected downtime to the customer in excess of 48 hours from the time of diagnoses. All repairs will be performed by factory trained dealer service personnel, and allows for technician travel and mileage for all repairs up to 8 hours and 320 miles per incident.

PART 2 – PRODUCTS

2.1 MANUFACTURERS

A. The basis for this specification is Caterpillar Inc. equipment, approved equals may be considered if equipment performance is shown to meet the requirements herein.

2.2 ENGINE-GENERATOR SET

A. Generator Set:

1. The generator set shall be Standby Duty rated at 400 ekW, 500.0 kVA, 1800 RPM, 0.8 power factor, 480 VAC, Three Phase,60 hertz, including radiator fan and all parasitic loads. Generator set shall be sized to operate at the specified load at a maximum ambient of 105F (25.0C) and altitude of 1640 feet.

1 Standby Power Rating:

B. Engine:

1. The engine shall be diesel fueled, four (4) cycle, water-cooled, no less than 12.5 liter while operating with nominal speed not exceeding 1800 RPM, with piston speed no greater than 1,855 ft/min. The engine shall be direct injection and will utilize in-cylinder combustion technology, as required, to meet applicable EPA non-road mobile regulations and/or the EPA NSPS rule for stationary reciprocating compression ignition engines. Additionally, the engine shall comply with the State Emission regulations at the time of installation/commissioning. Actual engine emissions values must be in compliance with applicable EPA emissions standards per ISO 8178 – D2 Emissions Cycle at specified ekW / bHP rating. Emissions requirements / certifications of this package: EPA ESE.

2.3 GENERATOR

A. Generator:

1. The synchronous three phase generator shall be a single bearing, self-ventilated, drip-proof design in accordance with NEMA MG 1 and directly connected to the engine flywheel housing with a flex coupling. The generator shall meet performance class G2 of ISO 8528. The excitation system shall enable the alternator to sustain 300% of rated current based on the or 105C (Class F) rise rating for ten seconds during a fault condition and shall improve the immunity of the voltage regulator to non-linear distorting loads. The excitation system shall be of brushless construction and be independent of main stator windings thru installed permanent magnet generator.

B. Automatic Voltage Regulator:

1. The automatic voltage regulator (AVR) shall maintain generator output voltage within +/- 0.5% for any constant load between no load and full load. The regulator shall be a totally solid-state design, which includes electronic voltage buildup, over-excitation protection, shall limit voltage overshoot on startup, and shall be environmentally sealed, utilizing tropical coastal ingress protection. Voltage regulation shall be selectable to be either volts per hertz or by load adjustment module.

2.4 CIRCUIT BREAKERS

A. Provide Qty 2 generator mounted 100% rated circuit breakers, molded case, Qty One 600 amp with electronic adjustable trip, Qty One 250 amp with electronic adjustable trip 3 pole, NEMA 1/IP22. Breakers shall utilize a solid-state trip unit, and be outfitted with aux contacts and shunt trips. The breaker shall be UL/CSA Listed and connected to engine/generator safety shutdowns. Breaker shall be housed in an extension terminal box which is isolated from vibrations induced by the generator set. Mechanical type lugs, sized for the circuit breaker feeders shown on drawing, shall be supplied on the load side of breaker.

2.5 CONTROLS

A. Provide a fully solid-state, microprocessor based, generator set control. Provide an auto Start Control Module suitable for a wide variety of diesel genset applications. Monitoring an extensive number of engine parameters, the modules will display warnings, shutdown and engine status information on the backlit LCD screen and illuminated LED.

B. Controller Features:
   2. LCD alarm indication.
   3. Data logging facility.
   4. Protections disable feature.
   5. 3-phase generator sensing and protection.
   6. Generator current and power monitoring (kW, kVAR, kVA, pf) kW and kVAR overload and reverse power.
   7. Over current protection
   8. Unbalanced load protection
   9. Breaker control via fascia buttons
   10. Real time clock
   11. Engine pre-heat and post-heat functions
   12. Engine run-time scheduler
   13. Engine idle control for starting & stopping
   14. Fuel usage monitor and low fuel level alarms
   15. Outputs:
      a. Fuel
      b. Start
      c. Minimum 2 auxiliary contacts.
   16. Modbus TCP communications for SCADA integration with the following capabilities:
      a. Start / Stop control.
      b. Read, at a minimum, the following data points:
         - Fuel level.
         - Running status.
         - Faults.

2.6 FUEL

A. Fuel System: The fuel system shall be integral with the engine. In addition to the standard fuel filters provided by the engine manufacturer, there shall also be installed a primary fuel filter/water separator in the fuel inlet line to the engine. All fuel piping shall be black iron or flexible fuel hose rated for this service. No galvanized piping will be permitted. Flexible fuel lines shall be minimally rated for 300 degrees F and 100 psi.

B. Fuel Storage: Generator vendor shall provide a UL 142 listed, Facilitates compliance with NFPA 30 code, NFPA 37 and 110 standards, Double Wall sub base storage tank. The tank shall be provided with a minimum 1,400 usable gallons at 95% full level. Heavy gauge steel tank - for Diesel Fuel, Benz-oil interior protective coating, rust proofed and finished painted exterior (texture black standard). Tank fittings are engine supply dip tube, engine return, normal vent, emergency vent, manual fill, level alarm, & fuel level gauge.

C. The dimensions shall be no greater than 220’ long and 72” wide.

2.7 EXHAUST SYSTEM

A. Silencer: A critical grade silencer, companion flanges, and flexible stainless steel exhaust fitting properly sized shall be furnished and installed according to the manufacturer's recommendation. Mounting shall be provided by the contractor as shown on the drawings. The silencer shall be mounted so that its weight is not supported by the engine nor will exhaust system growth due to thermal expansion be imposed on the engine. Exhaust pipe size shall be sufficient to ensure that exhaust backpressure does not exceed the maximum limitations specified by the engine manufacturer.

2.8 STARTING SYSTEM

A. Starting Motor: A DC electric starting system with positive engagement shall be furnished. The motor voltage shall be as recommended by the engine manufacturer.
B. Jacket Water Heater: Jacket water heater shall be High Efficiency style equipped with circulating pump provided and shall be sized by the manufacturer to distribute warm glycol for this sized engine in the site low ambient conditions. Standard, non-forced flow, thermal convection style block heaters will not be accepted.
C. Batteries: A Maintenance free, lead-acid storage battery set of the heavy-duty diesel starting type shall be provided. Battery voltage shall be compatible with the starting system.
D. Battery Charger: A current limiting battery charger shall be furnished to automatically recharge batteries. The charger shall be dual charge rate with automatic switching to the boost rate when required. The battery charger shall be mounted on the genset package or inside the genset enclosure/room.

2.9 LOAD BANK

A. Operational Ratings and Limitations:
    1. Capacity: 200 kW, 1.0 power factor.
    2. Voltage: 480 VAC, 3-phase, 3-wire.
    3. Frequency: 60 Hertz.
    4. Load Steps: 25 kW load step resolution.
    5. Duty Cycle: Continuous.
    6. Temp. Rating: 180°F max. air intake temp. 60°-100°F nominal air temp. rise.
    7. Airflow Required: Radiator air outflow. Airflow is vertical.
    8. Altitude: 5500'.
    9. Control Power: Internal, from generator. Including fused circuits. Controls operate at 120 VAC via control power transformer circuit.

B. System and Components:
    1. UL listed, totally enclosed, weatherproof, tubular type, individually replaceable, +/- 5% tolerance.
    2. Load Control: Branch circuit magnetic contactors.
    3. Element Short-Circuit Protection: Branch circuit fuses. Fuses are 200KAIC, 600V, current limiting.
    4. Power Wiring: 150°C, insulated, color coded.
    5. Power Connection: Barrier type power distribution block with line side compression terminals -or- plated bus bar within a terminal junction box
    6. Control Wiring: 16 AWG.
    7. Overheat Protection: Sensor to detect high exhaust air temp above 300°F. Circuits to disconnect load bank on over temp. Alarm contacts.
    8. Enclosure: Environmental Type 3R outdoor unpainted galvanized steel

construction. Load bank is designed for permanent installation by mounting onto top of generator enclosure over the engine radiator air outflow duct. Load bank is designed to your air exhaust outlet with dimensions.

C. Control:
   1. Automatic and Manual control.
   2. Digital touch panel controller (HMI) with master load control, load step control.
   3. Over temp indicator and normal operation indicator
   4. Internal control circuit and input terminals to dump load bank off-line on opening of remote-control contacts. (Standard Load Dump Circuit).

D. Automatic Load Leveling:
   1. Automatic load leveling and load regulation are used to maintain total generator load within a preset bandwidth when external load demands on generator set are present. PLC controller senses generator load and automatically adds/subtracts load bank steps in order to maintain total generator load at a desired level. Controller senses kilowatts. Adjustable level and delay. Internal control circuit and input terminals to dump load bank off-line on opening of remote-control contacts.

E. Load Bank CTs: Current transformers should be placed at a single point where total load can be sensed regardless of whether prime power generator or standby generator is running.

2.10 ENCLOSURE

A. Sound Attenuated Enclosure: The complete engine generator set, including generator control panel, engine starting batteries and fuel oil tank, shall be enclosed in a factory assembled, sound attenuated enclosure mounted on the fuel tank base.

B. Enclosure Requirements: A weather resistant, sound attenuated enclosure of constructed with a minimum of 14-gauge steel with electrostatically applied powder coated baked polyester paint. The enclosure shall have a resulting sound level of 75 dba @23ft with the genset running under full load. It shall consist of a roof, side walls, and end walls. The enclosure shall provide motorized louvers and gravity discharge damper. There shall be three doors on both sides, vertically hinged opening 180 degrees and provided with door retention stays. Doors shall be lockable, with compression latches providing solid door seal. Exterior fasteners shall be stainless steel. Acoustical foam shall be provided between all supports and inside doors and sound baffles on air intake and air discharge

PART 3 - EXECUTION

3.1 INSTALLATION

A. Install equipment in accordance with manufacturer's recommendations, the project drawings and specifications, and all applicable codes.

B. Load Bank:
   1. Load Bank may ship separately from the generator.
   2. Load bank is designed for permanent installation onto top of generator enclosure with vertical engine radiator airflow.
   3. Contractor shall be responsible for load bank installation.

3.2 STARTUP AND TESTING

A. Coordinate all start-up and testing activities with the Engineer and Owner. After installation is complete and normal power is available, the manufacturer's local dealer shall perform the following:
   1. Factory Tests: Equipment supplied shall be fully tested at the factory for function and performance. Provide Submit test results prior to on-site test. Verify proper functionality. Record all tests including voltage and frequency dip responses and steady state values. Include test results in O&M Manuals.

3.3 ON-SITE ACCEPTANCE TEST

A. Fill sub-base fuel tank. Furnish all consumable products for testing. At end of test refill sub- base fuel tank.

B. The complete installation shall be tested for compliance with the specification following completion of all site work. Testing shall be conducted by representatives of the manufacturer, with required fuel supplied by Contractor. The Engineer shall be notified in advance and shall have the option to witness the tests.

C. The complete installation shall be tested for compliance with the specification following completion of all site work. Testing shall be conducted by representatives of the manufacturer, with required fuel supplied by Contractor. The Engineer shall be notified in advance and shall have the option to witness the tests.

D. Load tests shall demonstrate all modes of load shed control.

3.4 O&M MANUALS

A. Provide an operation and maintenance manual covering the generator, switchgear, and auxiliary components. Include final as-built wiring interconnect diagrams and recommended preventative maintenance schedules.

3.5 TRAINING

A. On-Site Training: Provide on-site training to instruct the owner's personnel in the proper operation and maintenance of the equipment. Review operation and maintenance manuals, parts manuals, and emergency service procedures.

END OF SECTION

SECTION 26 36 00 – TRANSFER SWITCHES

PART 1 - GENERAL

1.1 RELATED DOCUMENTS

A. Drawings and general provisions of the Contract, including General and Supplementary Conditions and Division 01 Specification Sections, apply to this Section.

1.2 SUMMARY

A. Section includes automatic transfer switches rated 600 V and less, including the following:
   1. Remote annunciator and control system.

1.3 ACTION SUBMITTALS

A. Product Data: For each type of product.
   1. Include construction details, material descriptions, dimensions of individual components and profiles, and finishes for transfer switches.
   2. Include rated capacities, operating characteristics, electrical characteristics, and accessories.

B. Shop Drawings:
   1. Include plans, elevations, sections, details showing minimum clearances, conductor entry provisions, gutter space, and installed features and devices.
   2. Include material lists for each switch specified.
   3. Single-Line Diagram: Show connections between transfer switch, power sources, and load; and show interlocking provisions for each combined transfer switch and bypass/isolation switch.
   4. Riser Diagram: Show interconnection wiring between transfer switches, bypass/isolation switches, annunciators, and control panels.

1.4 INFORMATIONAL SUBMITTALS

A. Qualification Data: For testing agency.

B. Seismic Qualification Data: Certificates, for transfer switches, accessories, and components, from manufacturer.
   1. Basis for Certification: Indicate whether withstand certification is based on actual test of assembled components or on calculation.
   2. Dimensioned Outline Drawings of Equipment Unit: Identify center of gravity and locate and describe mounting and anchorage provisions.
   3. Detailed description of equipment anchorage devices on which the certification is based and their installation requirements.

C. Field quality-control reports.

1.5 CLOSEOUT SUBMITTALS

A. Operation and Maintenance Data: For each type of product to include in emergency, operation, and maintenance manuals.
   1. In addition to items specified in Section 01700 - Contract Procedures, include the following:
      a. Features and operating sequences, both automatic and manual.
      b. List of all factory settings of relays; provide relay-setting and calibration instructions, including software, where applicable.

1.6 QUALITY ASSURANCE

A. Testing Agency Qualifications:
   1. Member company of NETA.
      a. Testing Agency's Field Supervisor: Certified by NETA to supervise on-site testing.

1.7 WARRANTY

A. Manufacturer's Warranty: Manufacturer agrees to repair or replace components of transfer switch or transfer switch components that fail in materials or workmanship within specified warranty period.

B. Warranty Period: Two years from date of Substantial Completion.

PART 2 - PRODUCTS

2.1 PERFORMANCE REQUIREMENTS

A. Electrical Components, Devices, and Accessories: Listed and labeled as defined in NFPA 70, by a qualified testing agency, and marked for intended location and application.

B. Comply with NEMA ICS 1.

C. Comply with NFPA 99.

D. Comply with NFPA 110.

E. Comply with UL 1008 unless requirements of these Specifications are stricter.

F. Indicated Current Ratings: Apply as defined in UL 1008 for continuous loading and total system transfer, including tungsten filament lamp loads not exceeding 30 percent of switch ampere rating, unless otherwise indicated.

G. Tested Fault-Current Closing and Short-Circuit Ratings: Adequate for duty imposed by protective devices at installation locations in Project under the fault conditions indicated, based on testing according to UL 1008.
   1. Where transfer switch includes internal fault-current protection, rating of switch and trip unit combination shall exceed indicated fault-current value at installation location.
   2. Short-time withstand capability for 3 cycles.

H. Repetitive Accuracy of Solid-State Controls: All settings shall be plus or minus 2 percent or better over an operating temperature range of minus 20 to plus 70 deg C.

I. Resistance to Damage by Voltage Transients: Components shall meet or exceed voltage-surge withstand capability requirements when tested according to IEEE C62.62. Components shall meet or exceed voltage-impulse withstand test of NEMA ICS 1.

J. Electrical Operation: Accomplish by a non-fused, momentarily energized solenoid or electric- motor-operated mechanism. Switches for emergency or standby purposes shall be mechanically and electrically interlocked in both directions to prevent simultaneous connection to both power sources unless closed transition.

K. Neutral Terminal: Solid and fully rated unless otherwise indicated.

L. Oversize Neutral: Ampacity and switch rating of neutral path through units indicated for

oversize neutral shall be double the nominal rating of circuit in which switch is installed.

M. Annunciation, Control, and Programming Interface Components: Devices at transfer switches for communicating with remote programming devices, annunciators, or annunciator and control panels shall have communication capability matched with remote device.

N. Factory Wiring: Train and bundle factory wiring and label, consistent with Shop Drawings, by color-code or by numbered or lettered wire and cable with printed tape markers at terminations. Color-coding and wire and cable markers are specified in Section 26 05 53 "Identification for Electrical Systems."
   1. Designated Terminals: Pressure type, suitable for types and sizes of field wiring indicated.
   2. Power-Terminal Arrangement and Field-Wiring Space: Suitable for top, side, or bottom entrance of feeder conductors as indicated.
   3. Control Wiring: Equipped with lugs suitable for connection to terminal strips.
   4. Accessible via front access.

O. Enclosures: General-purpose NEMA 250, Type 12, complying with NEMA ICS 6 and UL 508, unless otherwise indicated.

2.2 CONTACTOR-TYPE AUTOMATIC TRANSFER SWITCHES

A. Basis of Design: ASCO 300 Series, or Engineer Approved Equal.

B. Comply with Level 1 equipment according to NFPA 110.

C. Switch Characteristics: Designed for continuous-duty repetitive transfer of full-rated current between active power sources.
   1. Limitation: Switches using molded-case switches or circuit breakers or insulated-case circuit-breaker components are unacceptable.
   2. Switch Action: Double throw; mechanically held in both directions.
   3. Contacts: Silver composition or silver alloy for load-current switching. Contactor-style automatic transfer-switch units, rated 600 A and higher, shall have separate arcing contacts
   4. Conductor Connectors: Suitable for use with conductor material and sizes.
   5. Material: Hard-drawn copper, 98 percent conductivity.
   6. Main and Neutral Lugs: Mechanical type.
   7. Ground Lugs and Bus-Configured Terminators: Mechanical type.
   8. Ground bar.
   9. Connectors shall be marked for conductor size and type according to UL 1008.

D. Automatic Open-Transition Transfer Switches: Interlocked to prevent the load from being closed on both sources at the same time.
   1. Sources shall be mechanically and electrically interlocked to prevent closing both sources on the load at the same time.

E. Manual Switch Operation: Unloaded. Control circuit automatically disconnects from electrical operator during manual operation.

F. Signal-Before-Transfer Contacts: A set of normally open/normally closed dry contacts operates in advance of retransfer to normal source. Interval shall be adjustable from 1 to 30 seconds.

G. Automatic Transfer-Switch Controller Features:
   1. Controller operates through a period of loss of control power.
   2. Undervoltage Sensing for Each Phase of Normal Source: Sense low phase-to-ground voltage on each phase. Pickup voltage shall be adjustable from 85 to 100 percent of nominal, and dropout voltage shall be adjustable from 75 to 98 percent of pickup value. Factory set for pickup at 90 percent and dropout at 85 percent.
   3. Voltage/Frequency Lockout Relay: Prevent premature transfer to generator. Pickup voltage shall be adjustable from 85 to 100 percent of nominal. Factory set for pickup at 90 percent. Pickup frequency shall be adjustable from 90 to 100 percent of nominal. Factory set for pickup at 95 percent.
   4. Time Delay for Retransfer to Normal Source: Adjustable from zero to 30 minutes, and factory set for 10 minutes. Override shall automatically defeat delay on loss of voltage or sustained undervoltage of emergency source, provided normal supply has been restored.
   5. Test Switch: Simulate normal-source failure.
   6. Switch-Position Pilot Lights: Indicate source to which load is connected.
   7. Source-Available Indicating Lights: Supervise sources via transfer-switch normal- and emergency-source sensing circuits.
      a. Normal Power Supervision: Green light with nameplate engraved "Normal Source Available."
      b. Emergency Power Supervision: Red light with nameplate engraved "Emergency Source Available."
   8. Unassigned Auxiliary Contacts: Two normally open, single-pole, double-throw contacts for each switch position, rated 10 A at 240-V ac.
   9. Transfer Override Switch: Overrides automatic retransfer control so transfer switch will remain connected to emergency power source regardless of condition of normal source. Pilot light indicates override status.
   10. Engine Starting Contacts: One isolated and normally closed, and one isolated and normally open; rated 10 A at 32-V dc minimum.
   11. Engine Shutdown Contacts: Instantaneous; shall initiate shutdown sequence at remote engine-generator controls after retransfer of load to normal source.
   12. Engine Shutdown Contacts: Time delay adjustable from zero to five minutes, and factory set for five minutes. Contacts shall initiate shutdown at remote engine-generator controls after retransfer of load to normal source.
   13. Engine-Generator Exerciser: Solid-state, programmable-time switch starts engine generator and transfers load to it from normal source for a preset time, then retransfers and shuts down engine after a preset cool-down period. Initiates exercise cycle at preset intervals adjustable from 7 to 30 days. Running periods shall be adjustable from 10 to 30 minutes. Factory settings shall be for 7-day exercise cycle, 20-minute running period, and 5-minute cool-down period. Exerciser features include the following:
      a. Exerciser Transfer Selector Switch: Permits selection of exercise with and without load transfer.
      b. Push-button programming control with digital display of settings.
      c. Integral battery operation of time switch when normal control power is unavailable.

2.3 SOURCE QUALITY CONTROL

A. Factory Tests: Test and inspect components, assembled switches, and associated equipment according to UL 1008. Ensure proper operation. Check transfer time and voltage, frequency, and time-delay settings for compliance with specified requirements. Perform dielectric strength test complying with NEMA ICS 1.

B. Prepare test and inspection reports.
   1. For each of the tests required by UL 1008, performed on representative devices, for legally required systems. Include results of test for the following conditions:
      a. Overvoltage.
      b. Undervoltage
      c. Loss of supply voltage.
      d. Reduction of supply voltage.
      e. Alternative supply voltage or frequency is at minimum acceptable values.
      f. Temperature rise.
      g. Dielectric voltage-withstand; before and after short-circuit test.
      h. Overload.
      i. Contact opening.
      j. Endurance.
      k. Short circuit.
      l. Short-time current capability
      m. Receptacle withstand capability.
      n. Insulating base and supports damage.

PART 3 - EXECUTION

3.1 INSTALLATION

A. Floor-Mounting Switch: Anchor to floor by bolting.
   1. Comply with requirements for seismic control devices.
   2. Coordinate size and location of concrete bases. Cast anchor-bolt inserts into bases.
   3. Provide workspace and clearances required by NFPA 70.

B. Annunciator Mounting: Flush in wall unless otherwise indicated.

C. Identify components according to Section 26 05 53 "Identification for Electrical Systems."

D. Set field-adjustable intervals and delays, relays, and engine exerciser clock.

E. Comply with NECA 1.

3.2 CONNECTIONS

A. Wiring to Remote Components: Match type and number of cables and conductors to generator sets, motor controls, control, and communication requirements of transfer switches as recommended by manufacturer. Increase raceway sizes at no additional cost to Owner if necessary to accommodate required wiring.

B. Wiring Method: Install cables in raceways and cable trays except within electrical enclosures. Conceal raceway and cables except in unfinished spaces.
   1. Comply with requirements for raceways and boxes specified in Section 26 05 33 "Electrical Raceway Systems."

C. Wiring within Enclosures: Bundle, lace, and train conductors to terminal points with no excess and without exceeding manufacturer's limitations on bending radii.

D. Ground equipment according to Section 26 05 26 "Grounding"

E. Connect wiring according to Section 26 05 19 "Wires and Cables."

F. Connect twisted pair cable according to Section 26 05 23 "Control-Voltage Electrical Power Cables."

G. Route and brace conductors according to manufacturer's written instructions and Section 26 05 29 "Hangers and Supports for Electrical Systems." Do not obscure manufacturer's markings and labels.

H. Brace and support equipment for seismic events.

I. Final connections to equipment shall be made with liquidtight, flexible metallic conduit no more than 18 inches (457 mm) in length.

3.3 FIELD QUALITY CONTROL

A. Testing Agency: Engage a qualified testing agency to perform tests and inspections.

B. Manufacturer's Field Service: Engage a factory-authorized service representative to test and inspect components, assemblies, and equipment installations, including connections.

C. Perform the following tests and inspections:
   1. After installing equipment, test for compliance with requirements according to NETA ATS.
   2. Visual and Mechanical Inspection:
      a. Compare equipment nameplate data with Drawings and Specifications.
      b. Inspect physical and mechanical condition.
      c. Inspect anchorage, alignment, grounding, and required clearances.
      d. Verify that the unit is clean.
      e. Verify appropriate lubrication on moving current-carrying parts and on moving and sliding surfaces
      f. Verify that manual transfer warnings are attached and visible.
      g. Verify tightness of all control connections.
      h. Inspect bolted electrical connections for high resistance using one of the following methods, or both:
         1) Use of low-resistance ohmmeter.
         2) Verify tightness of accessible bolted electrical connections by calibrated torque-wrench method according to manufacturer's published data.
      i. Perform manual transfer operation.
      j. Verify positive mechanical interlocking between normal and alternate sources.
      k. Perform visual and mechanical inspection of surge arresters.
      l. Inspect control power transformers.
         1) Inspect for physical damage, cracked insulation, broken leads, tightness of connections, defective wiring, and overall general condition.
         2) Verify that primary and secondary fuse or circuit-breaker ratings match Drawings.
         3) Verify correct functioning of drawout disconnecting contacts, grounding contacts, and interlocks.

3. Electrical Tests:
    a. Perform insulation-resistance tests on all control wiring with respect to ground.
    b. Perform a contact/pole-resistance test. Compare measured values with manufacturer's acceptable values.
    c. Verify settings and operation of control devices.
    d. Calibrate and set all relays and timers.
    e. Verify phase rotation, phasing, and synchronized operation.
    f. Perform automatic transfer tests.
    g. Verify correct operation and timing of the following functions:
        1) Normal source voltage-sensing and frequency-sensing relays.
        2) Engine start sequence.
        3) Time delay on transfer
        4) Alternative source voltage-sensing and frequency-sensing relays.
        5) Automatic transfer operation.
        6) Interlocks and limit switch function.
        7) Time delay and retransfer on normal power restoration.
        8) Engine cool-down and shutdown feature.

4. Measure insulation resistance phase-to-phase and phase-to-ground with insulation-resistance tester. Include external annunciation and control circuits. Use test voltages and procedure recommended by manufacturer. Comply with manufacturer's specified minimum resistance.
    a. Check for electrical continuity of circuits and for short circuits.
    b. Inspect for physical damage, proper installation and connection, and integrity of barriers, covers, and safety features
    c. Verify that manual transfer warnings are properly placed.
    d. Perform manual transfer operation.

5. After energizing circuits, perform each electrical test for transfer switches stated in NETA ATS and demonstrate interlocking sequence and operational function for each switch at least three times.
    a. Simulate power failures of normal source to automatic transfer switches and retransfer from emergency source with normal source available.
    b. Simulate loss of phase-to-ground voltage for each phase of normal source.
    c. Verify time-delay settings.
    d. Verify pickup and dropout voltages by data readout or inspection of control settings.
    e. Perform contact-resistance test across main contacts and correct values exceeding 500 microhms and values for one pole deviating by more than 50 percent from other poles.
    f. Verify proper sequence and correct timing of automatic engine starting, transfer time delay, retransfer time delay on restoration of normal power, and engine cool- down and shutdown.

6. Ground-Fault Tests: Coordinate with testing of ground-fault protective devices for power delivery from both sources.
    a. Verify grounding connections and locations and ratings of sensors.

D. Coordinate tests with tests of generator and run them concurrently.

E. Report results of tests and inspections in writing. Record adjustable relay settings and measured insulation and contact resistances and time delays. Attach a label or tag to each tested component indicating satisfactory completion of tests.

F. Transfer switches will be considered defective if they do not pass tests and inspections.

G. Remove and replace malfunctioning units and retest as specified above.

H. Prepare test and inspection reports.

I. Infrared Scanning: After Substantial Completion, but not more than 60 days after Final Acceptance, perform an infrared scan of each switch. Remove all access panels so joints and connections are accessible to portable scanner.
   1. Instrument: Use an infrared scanning device designed to measure temperature or to detect significant deviations from normal values. Provide calibration record for device.
   2. Record of Infrared Scanning: Prepare a certified report that identifies switches checked and that describes scanning results. Include notation of deficiencies detected, remedial action taken, and observations after remedial action.
   3. Follow-up Infrared Scanning: Perform an additional follow-up infrared scan of each switch 11 months after date of Substantial Completion.

3.4 DEMONSTRATION

A. Train Owner's maintenance personnel to adjust, operate, and maintain transfer switches and related equipment.

B. Training shall include testing ground-fault protective devices and instructions to determine when the ground-fault system shall be retested. Include instructions on where ground-fault sensors are located and how to avoid negating the ground-fault protection scheme during testing and circuit modifications.

C. Coordinate this training with that for generator equipment.

END OF SECTION

SECTION 26 43 13 – SURGE PROTECTION FOR LOW-VOLTAGE ELECTRICAL POWER CIRCUITS

PART 1 - GENERAL

1.1 RELATED DOCUMENTS

A. Drawings and general provisions of the Contract, including General and Supplementary Conditions and Division 01 Specification Sections, apply to this Section.

1.2 SUMMARY

A. Section includes:

1. Type 1 surge protective devices..
2. Type 2 surge protective devices.
3. Enclosures.
4. Conductors and cables.

B. Related Requirements:

1. Section 26 24 13 "Switchboards" for integral SPDs installed by switchboard manufacturer.
2. Section 26 24 16 "Panelboards" for integral SPDs installed by panelboard manufacturer.

1.3 DEFINITIONS

A. Inominal: Nominal discharge current.

B. MCOV: Maximum continuous operating voltage.

C. Mode(s), also Modes of Protection: air of electrical connections where the VPR applies.

D. MOV: Metal-oxide varistor; an electronic component with a significant non-ohmic current-voltage characteristic.

E. NRTL: Nationally recognized testing laboratory.

F. OCPD: Overcurrent protective device.

G. SCCR: Short-circuit current rating.

H. SPD: Surge protective device.

I. Type 1 SPDs: Permanently connected SPDs intended for installation between the secondary of the service transformer and the line side of the service disconnect overcurrent device.

J. Type 2 SPDs: Permanently connected SPDs intended for installation on the load side of the service disconnect overcurrent device, including SPDs located at the branch panel.

K. Type 3 SPDs: Point of utilization SPDs.

L. Type 4 SPDs: Component SPDs, including discrete components, as well as assemblies.

M. Type 5 SPDs: Discrete component surge suppressors, such as MOVs that may be mounted on a printed wiring board, connected by its leads or provided within an enclosure with mounting means and wiring terminations.

N. VPR: Voltage protection rating.

1.4 ACTION SUBMITTALS

A. Product Data: For each type of product.
   1. Include electrical characteristics, specialties, and accessories for SPDs.
   2. NRTL certification of compliance with TL 1449.
      a. Tested values for VPRs.
      b. Inominal ratings.
      c. MCOV, type designations.
      d. OCPD requirements.
      e. Manufacturer’s model number.
      f. System voltage.
      g. Modes of protection.

1.5 INFORMATIONAL SUBMITTALS

A. Field quality-control reports.

B. Sample Warranty: For manufacturer's special warranty.

1.6 CLOSEOUT SUBMITTALS

A. Maintenance Data: For SPDs to include in maintenance manuals.

1.7 WARRANTY

A. Manufacturer’s Warranty: Manufacturer agrees to repair or replace SPDs that fail in materials or workmanship within five years from date of Substantial Completion.

PART 2 - PRODUCTS

2.1 TYPE 1 SURGE PROTECTIVE DEVICES (SPDs)

A. Source Limitations: Obtain devices from single source from single manufacturer.

B. Standards:
   1. Listed and labeled by an NRTL acceptable to authorities having jurisdiction as complying with UL 1449, Type 1.

C. Product Options:
   1. Include integral disconnect switch.
   2. Include internal thermal protection that disconnects the SPD before damaging internal suppressor components.
   3. Include indicator light display for protection status.
   4. Include audible alarm.
   5. Include NEMA ICS 5, dry Form C contacts rated at 2 A and 120 V ac for remote monitoring of protection status.
   6. Include surge counter.

D. Performance Criteria:
   1. MCOV: Not less than 125 percent of nominal system voltage for 240Δ/120 V and

power systems.

2. Peak Surge Current Rating: Minimum single-pulse surge current withstand rating per phase must not be less than 200 kA. Peak surge current rating must be arithmetic sum of the ratings of individual MOVs in a given mode.
3. Protection modes and UL 1449 VPR for grounded wye circuits with 240Δ/120 V, three-phase, four-wire circuits must not exceed the following:
   a. Line to Neutral: 240Δ/120 V.
   b. Line to Line: 240Δ/120 V.
4. SCCR: Not less than 200 kA.
5. Inominal Rating: 20 kA.

2.2 TYPE 2 SURGE PROTECTIVE DEVICES (SPDs)

A. Source Limitations: Obtain devices from single source from single manufacturer.

B. Standards:
1. Listed and labeled by an NRTL acceptable to authorities having jurisdiction as complying with UL 1449, Type 2.
2. Comply with UL 1283.

C. Product Options:
1. Include LED indicator lights for power and protection status.
2. Include internal thermal protection that disconnects the SPD before damaging internal suppressor components.
3. Include NEMA ICS 5, dry Form C contacts rated at 2 A and 120 V ac for remote monitoring of protection status.
4. Include surge counter.

D. Performance Criteria:
1. MCOV: Not less than 125 percent of nominal system voltage for 208Y/120 V and 120/240 V power systems, and not less than 115 percent of nominal system voltage for 480Y/277 V power systems.
2. Peak Surge Current Rating: Minimum single-pulse surge current withstand rating per phase must not be less than 100 kA. Peak surge current rating must be arithmetic sum of the ratings of individual MOVs in a given mode.
3. Protection modes and UL 1449 VPR for grounded wye circuits with 240Δ/120 V, three-phase, four-wire circuits must not exceed the following:
   a. Line to Neutral: 240Δ/120 V.
   b. Line to Ground: 240Δ/120 V.
   c. Neutral to Ground: 240Δ/120 V.
   d. Line to Line: 240Δ/120 V.

2.3 ENCLOSURES

A. Indoor Enclosures: NEMA 250, Type 1.

B. Outdoor Enclosures: NEMA 250, Type 4X.

PART 3 - EXECUTION

3.1 INSTALLATION

A. Comply with NECA 1.

B. Provide OCPD and disconnect for installation of SPD in accordance with UL 1449 and manufacturer's written instructions.

C. Install leads between disconnects and SPDs short, straight, twisted, and in accordance with manufacturer's written instructions. Comply with wiring methods in Section 26 05 19 "Low-Voltage Electrical Power Conductors and Cables."
   1. Do not splice and extend SPD leads unless specifically permitted by manufacturer.
   2. Do not exceed manufacturer's recommended lead length.
   3. Do not bond neutral and ground.

D. Use crimped connectors and splices only. Wire nuts are unacceptable.

3.2 FIELD QUALITY CONTROL

A. Perform the following tests and inspections with the assistance of a factory-authorized service representative:
   1. Compare equipment nameplate data for compliance with Drawings and the Specifications.
   2. Inspect anchorage, alignment, grounding, and clearances.
   3. Verify that electrical wiring installation complies with manufacturer's written installation requirements.

B. SPDs that do not pass tests and inspections will be considered defective.

C. Prepare test and inspection reports.

3.3 STARTUP SERVICE

A. Complete startup checks in accordance with manufacturer's written instructions.

B. Do not perform insulation-resistance tests of the distribution wiring equipment with SPDs installed. Disconnect SPDs before conducting insulation-resistance tests; reconnect them immediately after the testing is over.

C. Energize SPDs after power system has been energized, stabilized, and tested.

3.4 DEMONSTRATION

A. Train Owner's maintenance personnel to operate and maintain SPDs.

END OF SECTION

SECTION 26 51 19 – INTERIOR LIGHTING

PART 1 - GENERAL

1.1 RELATED DOCUMENTS

A. Drawings and general provisions of the Contract, including General and Supplementary Conditions and Division 01 Specification Sections, apply to this Section.

1.2 SUMMARY

A. Section includes the following types of LED luminaires:
   1. Interior lighting fixtures and drivers.
   2. Emergency lighting units.
   3. Exit signs.
   4. Lighting fixture supports.

1.3 DEFINITIONS

A. CCT: Correlated color temperature.

B. CRI: Color Rendering Index.

C. Fixture: See "Luminaire."

D. IP: International Protection or Ingress Protection Rating.

E. LED: Light-emitting diode.

F. Lumen: Measured output of lamp and luminaire, or both.

G. Luminaire: Complete lighting unit, including lamp, reflector, and housing.

1.4 ACTION SUBMITTALS

A. Product Data: For each type of product.
   1. Physical description of lighting fixture including dimensions.
   2. Emergency lighting units including battery and charger.
   3. Driver.
   4. Energy-efficiency data.
   5. Life, output (lumens, CCT, and CRI), and energy-efficiency data.
   6. Photometric data and adjustment factors based on laboratory tests, complying with IES "Lighting Measurements Testing and Calculation Guides" for each luminaire type. The adjustment factors shall be for lamps and accessories identical to those indicated for the luminaire as applied in this Project.
      a. Manufacturers' Certified Data: Photometric data certified by manufacturer's laboratory with a current accreditation under the National Voluntary Laboratory Accreditation Program for Energy Efficient Lighting Products.
      b. Testing Agency Certified Data: For indicated luminaires, photometric data certified by a qualified independent testing agency. Photometric data for remaining luminaires shall be certified by manufacturer.

B. Shop Drawings: For nonstandard or custom luminaires.
   1. Include plans, elevations, sections, and mounting and attachment details.
   2. Include details of luminaire assemblies. Indicate dimensions, weights, loads, required clearances, method of field assembly, components, and location and size of each field connection.
   3. Include diagrams for power, signal, and control wiring.

C. Sustainable Design Submittals:

D. Product Schedule: For luminaires and lamps. Use same designations indicated on Drawings.

1.5 INFORMATIONAL SUBMITTALS

A. Field quality-control reports.

B. Warranty: Sample of special warranty.

1.6 CLOSEOUT SUBMITTALS

A. Operation and Maintenance Data: For lighting equipment and fixtures to include in emergency, operation, and maintenance manuals.

B. Provide a list of all lamp types used on Project; use ANSI and manufacturers' codes.

1.7 QUALITY ASSURANCE

A. Luminaire Photometric Data Testing Laboratory Qualifications: Provided by manufacturers' laboratories that are accredited under the National Volunteer Laboratory Accreditation Program for Energy Efficient Lighting Products.

B. Electrical Components, Devices, and Accessories: Listed and labeled as defined in NFPA 70, by a qualified testing agency, and marked for intended location and application.

C. Comply with NFPA 70.

1.8 COORDINATION

A. Coordinate layout and installation of lighting fixtures and suspension system with other construction that penetrates ceilings or is supported by them.

1.9 WARRANTY

A. Special Warranty for Emergency Lighting Batteries: Manufacturer's standard form in which manufacturer of battery-powered emergency lighting unit agrees to repair or replace components of rechargeable batteries that fail in materials or workmanship within specified warranty period.

B. Warranty Period for Emergency Lighting Unit Batteries: 10 years from date of Substantial Completion. Full warranty shall apply for first year, and prorated warranty for the remaining nine years.

PART 2 - PRODUCTS

2.1 MANUFACTURERS

A. Products: Subject to compliance with requirements, provide product indicated on Drawings.

2.2 GENERAL REQUIREMENTS FOR LIGHTING FIXTURES AND COMPONENTS

A. LED Fixtures: Comply with UL 1598. Where LER is specified, test according to NEMA LE 5A.

B. Metal Parts: Free of burrs and sharp corners and edges.

C. Sheet Metal Components: Steel unless otherwise indicated. Form and support to prevent warping and sagging.

D. Doors, Frames, and Other Internal Access: Smooth operating, free of light leakage under operating conditions, and designed to permit relamping without use of tools. Designed to prevent doors, frames, lenses, diffusers, and other components from falling accidentally during relamping and when secured in operating position.

E. Diffusers and Globes:
1. Acrylic Lighting Diffusers: 100 percent virgin acrylic plastic. High resistance to yellowing and other changes due to aging, exposure to heat, and UV radiation.
   a. Lens Thickness: At least 0.125inch (3.175 mm) minimum unless otherwise indicated.
   b. UV stabilized.
2. Glass: Annealed crystal glass unless otherwise indicated.

F. Factory-Applied Labels: Comply with UL 1598. Labels shall be located where they will be readily visible to service personnel, but not seen from normal viewing angles.

2.3 DRIVERS FOR LED SOURCED LUMINAIRES

A. General Requirements for Electronic Drivers:
1. Exterior Environmental Protection: IP66 outdoor rated.
2. Designed for type and quantity of lamps served.
3. Drivers shall be designed for full light output unless dimmer control is indicated.
4. Drivers shall operate at 60 Hz.
5. Sound Rating: Class A.
6. Output Voltage Regulation: 1 percent Line and 5 percent Load.
7. Total Harmonic Distortion Rating: Less than 20 percent.
8. Current Crest Factor: 1.5, maximum.
9. Transient Voltage Protection: IEEE C62.41.1 and IEEE C62.41.2, Category A or better.
10. Lower operating frequencies are available but may interfere with default ballasts when used in proximity of infrared sensors.
11. Efficiency: 90 percent, or higher.
12. Power Factor: 0.90, or higher.

2.4 EMERGENCY POWER UNIT

A. Internal Type: Self-contained, modular, battery-inverter unit, factory mounted within lighting fixture body and compatible with driver. Comply with UL 924.
1. Emergency Connection: Operate lamps continuously at an output 1100 lumens each. Connect unswitched circuit to battery-inverter unit and switched circuit to fixture driver.
2. Test Push Button and Indicator Light: Visible and accessible without opening fixture or entering ceiling space.
   a. Push Button: Push-to-test type, in unit housing, simulates loss of normal power and demonstrates unit operability.
   b. Indicator Light: LED indicates normal power on. Normal glow indicates trickle charge; bright glow indicates charging at end of discharge cycle.
3. Battery: Sealed, maintenance-free, nickel-cadmium type.
4. Charger: Fully automatic, solid-state, constant-current type with sealed power transfer relay.

2.5 EXIT SIGNS

A. General Requirements for Exit Signs: Comply with UL 924; for sign colors, visibility, luminance, and lettering size, comply with authorities having jurisdiction.

B. Internally Lighted Signs:
   1. Lamps for AC Operation: LEDs, 50,000 hours minimum rated lamp life.
   2. Self-Powered Exit Signs (Battery Type): Integral automatic charger in a self-contained power pack.
      a. Battery: Sealed, maintenance-free, nickel-cadmium type.
      b. Charger: Fully automatic, solid-state type with sealed transfer relay.
      c. Operation: Relay automatically energizes lamp from battery when circuit voltage drops to 80 percent of nominal voltage or below. When normal voltage is restored, relay disconnects lamps from battery, and battery is automatically recharged and floated on charger.
      d. Test Push Button: Push-to-test type, in unit housing, simulates loss of normal power and demonstrates unit operability.
      e. LED Indicator Light: Indicates normal power on. Normal glow indicates trickle charge; bright glow indicates charging at end of discharge cycle.

2.6 LIGHTING FIXTURE SUPPORT COMPONENTS

A. Comply with Section 26 05 29 "Hangers and Supports for Electrical Systems" for channel- and angle-iron supports and nonmetallic channel and angle supports.

PART 3 - EXECUTION

3.1 INSTALLATION

A. Lighting fixtures:
   1. Set level, plumb, and square with ceilings and walls unless otherwise indicated.

B. Temporary Lighting: If it is necessary, and approved by Engineer, to use permanent luminaires for temporary lighting, install and energize the minimum number of luminaires necessary. When construction is sufficiently complete, remove the temporary luminaires, disassemble, clean thoroughly, and reinstall.

C. Connect wiring according to Section 26 05 19 "Wires and Cables."

3.2 FIELD QUALITY CONTROL

A. Test for Emergency Lighting: Interrupt power supply to demonstrate proper operation. Verify transfer from normal power to battery and retransfer to normal.

END OF SECTION

SECTION 26 52 13 – EMERGENCY LIGHTING

PART 1 - GENERAL

1.1 RELATED DOCUMENTS

A. Drawings and general provisions of the Contract, including General and Supplementary Conditions and Division 01 Specification Sections, apply to this Section.

1.2 SUMMARY

A. Section Includes:
   1. Emergency lighting units.
   2. Exit signs.
   3. Luminaire supports.

1.3 DEFINITIONS

A. CCT: Correlated color temperature.

B. CRI: Color Rendering Index.

C. Emergency Lighting Unit: A lighting unit with internal or external emergency battery powered supply and the means for controlling and charging the battery and unit operation.

D. Fixture: See "Luminaire" Paragraph.

E. Lumen: Measured output of lamp and luminaire, or both.

F. Luminaire: Complete lighting unit, including lamp, reflector, and housing.

1.4 ACTION SUBMITTALS

A. Product Data: For each type of emergency lighting unit, exit sign, and emergency lighting support.
   1. Include data on features, accessories, and finishes
   2. Include physical description of the unit and dimensions
   3. Battery and charger for light units
   4. Include life, output of luminaire (lumens, CCT, and CRI), and energy-efficiency data.
   5. Include photometric data and adjustment factors based on laboratory tests, complying with IES LM-45, for each luminaire type.
      a. Testing Agency Certified Data: For indicated luminaires and signs, photometric data certified by a qualified independent testing agency. Photometric data for remaining luminaires and signs shall be certified by manufacturer.
      b. Manufacturers' Certified Data: Photometric data certified by manufacturer's laboratory with a current accreditation under the National Voluntary Laboratory Accreditation Program for Energy Efficient Lighting Products.

B. Shop Drawings: For nonstandard or custom luminaires.
   1. Include plans, elevations, sections, and mounting and attachment details.
   2. Include details of equipment assemblies. Indicate dimensions, weights, loads, required clearances, method of field assembly, components, and location and size of each field connection.
   3. Include diagrams for power, signal, and control wiring.

C. Sustainable Design Submittals:

D. Product Schedule:
   1. For emergency lighting units.
   2. For exit signs. Use same designations indicated on Drawings.

1.5 INFORMATIONAL SUBMITTALS

A. Coordination Drawings: Reflected ceiling plan(s) and other details, drawn to scale, on which the following items are shown and coordinated with each other, using input from installers of the items involved:
   1. Luminaires.
   2. Suspended ceiling components.
   3. Partitions and millwork that penetrate the ceiling or extend to within 12 inches (300 mm) of the plane of the luminaires.
   4. Structural members to which equipment will be attached.
   5. Size and location of initial access modules for acoustical tile.
   6. Items penetrating finished ceiling including the following:
      a. Other luminaires.
      b. Air outlets and inlets.
      c. Sprinklers.
      d. Access panels.
   7. Moldings.

B. Qualification Data: For testing laboratory providing photometric data for luminaires.

C. Product Certificates: For each type of luminaire.

D. Seismic Qualification Data: For luminaires, accessories, and components, from manufacturer.
   1. Basis for Certification: Indicate whether withstand certification is based on actual test of assembled components or on calculation.
   2. Dimensioned Outline Drawings of Equipment Unit: Identify center of gravity and locate and describe mounting and anchorage provisions.
   3. Detailed description of equipment anchorage devices on which the certification is based and their installation requirements.
   4. Provide seismic qualification certificate for each piece of equipment.

E. Product Test Reports: For each luminaire for tests performed by a qualified testing agency.

F. Sample Warranty: For manufacturer's warranty.

1.6 CLOSEOUT SUBMITTALS

A. Operation and Maintenance Data: For luminaires and lighting systems to include in emergency, operation, and maintenance manuals.
   1. Provide a list of all lamp types used on Project; use ANSI and manufacturers' codes.

1.7 MAINTENANCE MATERIAL SUBMITTALS

A. Furnish extra materials that match products installed and that are packaged with protective covering for storage and identified with labels describing contents.
   1. Lamps: 10 for every 100 of each type and rating installed. Furnish at least one of each type.
   2. Luminaire-mounted, emergency battery pack: One for every 20 emergency lighting units. Furnish at least one of each type.

3. Diffusers and Lenses: One for every 100 of each type and rating installed. Furnish at least one of each type.
4. Globes and Guards: One for every 20 of each type and rating installed. Furnish at least one of each type.

1.8 QUALITY ASSURANCE

A. Luminaire Photometric Data Testing Laboratory Qualifications: Luminaire manufacturer's laboratory that is accredited under the National Volunteer Laboratory Accreditation Program for Energy Efficient Lighting Products.

B. Luminaire Photometric Data Testing Laboratory Qualifications: Provided by an independent agency, with the experience and capability to conduct the testing indicated, that is an NRTL as defined by OSHA in 29 CFR 1910.7, accredited under the National Volunteer Laboratory Accreditation Program for Energy Efficient Lighting Products, and complying with the applicable IES testing standards.

C. FM Global Compliance: Luminaires for hazardous locations shall be listed and labeled for indicated class and division of hazard by FM Global.

D. Mockups: For interior luminaires in room or module mockups, complete with power and control connections.
1. Obtain Architect's approval of luminaires and signs in mockups before starting installations.
2. Maintain mockups during construction in an undisturbed condition as a standard for judging the completed Work.
3. Approval of mockups does not constitute approval of deviations from the Contract Documents contained in mockups unless Architect specifically approves such deviations in writing.
4. Subject to compliance with requirements, approved mockups may become part of the completed Work if undisturbed at time of Substantial Completion.

1.9 DELIVERY, STORAGE, AND HANDLING

A. Protect finishes of exposed surfaces by applying a strippable, temporary protective covering before shipping.

1.10 WARRANTY

A. Warranty: Manufacturer and Installer agree to repair or replace components of luminaires that fail in materials or workmanship within specified warranty period.
1. Warranty Period: Two year(s) from date of Substantial Completion.

B. Special Warranty for Emergency Lighting Batteries: Manufacturer's standard form in which manufacturer of battery-powered emergency lighting unit agrees to repair or replace components of rechargeable batteries that fail in materials or workmanship within specified warranty period.
1. Warranty Period for Emergency Power Unit Batteries: Five years from date of Substantial Completion. Full warranty shall apply for first year and prorated warranty for the remaining four years.
2. Warranty Period for Self-Powered Exit Sign Batteries: Five years from date of

Substantial Completion. Full warranty shall apply for first year and prorated warranty for the remaining four years.

PART 2 - PRODUCTS

2.1 PERFORMANCE REQUIREMENTS

A. Seismic Performance: Luminaires shall withstand the effects of earthquake motions determined according to ASCE/SEI 7. Luminaires and lamps shall be labeled vibration and shock resistant.
   1. The term "withstand" means "the luminaire will remain in place without separation of any parts when subjected to the seismic forces specified and the luminaire will be fully operational during and after the seismic event."

2.2 GENERAL REQUIREMENTS FOR EMERGENCY LIGHTING

A. Electrical Components, Devices, and Accessories: Listed and labeled as defined in NFPA 70, by a qualified testing agency, and marked for intended location and application.

B. NRTL Compliance: Fabricate and label emergency lighting units, exit signs, and batteries to comply with UL 924.

C. Comply with NFPA 70 and NFPA 101.

D. Comply with NEMA LE 4 for recessed luminaires.

E. Comply with UL 1598 for fluorescent luminaires.

F. Lamp Base: Comply with ANSI C81.61.

G. Bulb Shape: Complying with ANSI C79.1.

H. Internal Type Emergency Power Unit: Self-contained, modular, battery-inverter unit, factory mounted within luminaire body.
   1. Environmental Limitations: Rate equipment for continuous operation under the following conditions unless otherwise indicated:
      a. Ambient Temperature: Less than 0 deg F (minus 18 deg C) or exceeding 104 deg F (40 deg C), with an average value exceeding 95 deg F (35 deg C) over a 24-hour period.
      b. Ambient Storage Temperature: Not less than minus 4 deg F (minus 20 deg C) and not exceeding 140 deg F (60 deg C).
      c. Humidity: More than 95 percent (condensing).
      d. Altitude: Exceeding 3300 feet (1000 m).

   2. Test Push-Button and Indicator Light: Visible and accessible without opening luminaire or entering ceiling space.
      a. Push Button: Push-to-test type, in unit housing, simulates loss of normal power and demonstrates unit operability.
      b. Indicator Light: LED indicates normal power on. Normal glow indicates trickle charge; bright glow indicates charging at end of discharge cycle.

   3. Battery: Sealed, maintenance-free, nickel-cadmium type.

4. Charger: Fully automatic, solid-state, constant-current type with sealed power transfer relay.
5. Integral Self-Test: Factory-installed electronic device automatically initiates code-required test of unit emergency operation at required intervals. Test failure is annunciated by an integral audible alarm and a flashing red LED.

2.3 EMERGENCY LIGHTING

A. General Requirements for Emergency Lighting Units: Self-contained units.

B. Emergency Luminaires:

1. Emergency Luminaires: as indicated on Interior Luminaire Schedule, with the following additional features:
   a. Operating at nominal voltage of 120 V ac.
   b. Internal] emergency power unit.
   c. Rated for installation in damp locations, and for sealed and gasketed luminaires in wet locations.
   d. UL 94 5VA flame rating.

2.4 EXIT SIGNS

A. General Requirements for Exit Signs: Comply with UL 924; for sign colors, visibility, luminance, and lettering size, comply with authorities having jurisdiction.

B. Internally Lighted Signs:
1. Operating at nominal voltage of 120 V ac.
2. Lamps for AC Operation: Fluorescent, two for each luminaire; 20,000 hours of rated lamp life.
3. Lamps for AC Operation: LEDs; 50,000 hours minimum rated lamp life.
4. Self-Powered Exit Signs (Battery Type): Internal emergency power unit.

2.5 MATERIALS

A. Metal Parts:

1. Free of burrs and sharp corners and edges.
2. Sheet metal components shall be steel unless otherwise indicated.
3. Form and support to prevent warping and sagging.

B. Doors, Frames, and Other Internal Access:
1. Smooth operating, free of light leakage under operating conditions.
2. Designed to permit relamping without use of tools.
3. Designed to prevent doors, frames, lenses, diffusers, and other components from falling accidentally during relamping and when secured in operating position.

C. Diffusers and Globes:
1. Acrylic: 100 percent virgin acrylic plastic, with high resistance to yellowing and other changes due to aging, exposure to heat, and UV radiation.
2. Lens Thickness: At least 0.125 inch (3.175 mm) minimum unless otherwise indicated.

D. Housings:
1. Extruded aluminum housing.
2. Clear anodized finish.

E. Conduit: Electrical metallic tubing, minimum 3/4 inch (21 mm) in diameter.

2.6 METAL FINISHES

A. Appearance of Finished Work: Noticeable variations in same piece are not acceptable. Variations in appearance of adjoining components are acceptable if they are within the range of approved Samples and are assembled or installed to minimize contrast.

2.7 LUMINAIRE SUPPORT COMPONENTS

A. Comply with requirements in Section 26 05 29 "Hangers and Supports for Electrical Systems" for channel and angle iron supports and nonmetallic channel and angle supports.

B. Support Wires: ASTM A641/A641M, Class 3, soft temper, zinc-coated steel, 12 gage (2.68 mm).

PART 3 - EXECUTION

3.1 EXAMINATION

A. Examine substrates, areas, and conditions, with Installer present, for compliance with requirements for conditions affecting performance of luminaires.

B. Examine roughing-in for luminaire to verify actual locations of luminaire and electrical connections before luminaire installation.

C. Examine walls, floors, roofs, and ceilings for suitable conditions where emergency lighting luminaires will be installed.

D. Proceed with installation only after unsatisfactory conditions have been corrected.

3.2 INSTALLATION

A. Comply with NECA 1.

B. Install luminaires level, plumb, and square with ceilings and walls unless otherwise indicated.

C. Install lamps in each luminaire.

D. Supports:
1. Sized and rated for luminaire and emergency power unit weight.
2. Able to maintain luminaire position when testing emergency power unit.
3. Provide support for luminaire and emergency power unit without causing deflection of ceiling or wall.
4. Luminaire-mounting devices shall be capable of supporting a horizontal force of 100 percent of luminaire and emergency power unit weight and vertical force of 400 percent of luminaire weight.

E. Wall-Mounted Luminaire Support:
1. Attached to structural members in walls.
2. Do not attach luminaires directly to gypsum board.

3.3 IDENTIFICATION

A. Identify system components, wiring, cabling, and terminals. Comply with requirements for identification specified in Section 260553 "Identification for Electrical Systems."

3.4 FIELD QUALITY CONTROL

A. Perform the following tests and inspections:
   1. Test for Emergency Lighting: Interrupt power supply to demonstrate proper operation. Verify transfer from normal power to battery power and retransfer to normal.

B. Luminaire will be considered defective if it does not pass operation tests and inspections.

C. Prepare test and inspection reports.

3.5 STARTUP SERVICE

A. Perform startup service:
   1. Charge emergency power units and batteries minimum of one hour and depress switch to conduct short-duration test.
   2. Charge emergency power units and batteries minimum of 24 hours and conduct one-hour discharge test.

3.6 ADJUSTING

A. Adjustments: Within 12 months of date of Substantial Completion, provide on-site visit to do the following:
   1. Inspect all luminaires. Replace lamps, emergency power units, batteries, signs, or luminaires that are defective.
      a. Parts and supplies shall be manufacturer's authorized replacement parts and supplies.

   2. Conduct short-duration tests on all emergency lighting.

END OF SECTION

SECTION 26 56 19 –EXTERIOR LIGHTING

PART 1 - GENERAL

1.1 RELATED DOCUMENTS

A. Drawings and general provisions of the Contract, including General and Supplementary Conditions and Division 01 Specification Sections, apply to this Section.

1.2 SUMMARY

A. Section includes MCCs for use with ac circuits rated 600 V and less and having the following factory-installed components:

1. Exterior solid-state luminaires that are designed for and exclusively use LED lamp technology.
2. Luminaire supports.
3. Luminaire-mounted photoelectric relays.

1.3 DEFINITIONS

A. CE: Conformity European (European Compliance).

B. CRI: Color rendering index.

C. Fixture: See "Luminaire."

D. IP: International Protection or Ingress Protection Rating.

E. Lumen: Measured output of lamp and luminaire, or both.

F. Luminaire: Complete lighting unit, including lamp, reflector, and housing.

1.4 ACTION SUBMITTALS

A. Product Data: For each type of luminaire.

1. Arrange in order of luminaire designation.
2. Include data on features, accessories, and finishes.
3. Include physical description and dimensions of luminaire.
4. Lamps, include life, output (lumens, CCT, and CRI), and energy-efficiency data.
5. Photometric data and adjustment factors based on laboratory tests, complying with IES Lighting Measurements Testing and Calculation Guides, of each luminaire type. The adjustment factors shall be for lamps and accessories identical to those indicated for the luminaire as applied in this Project.
    a. Manufacturer's Certified Data: Photometric data certified by manufacturer's laboratory with a current accreditation under the NVLAP for Energy Efficient Lighting Products.
    b. Testing Agency Certified Data: For indicated luminaires, photometric data certified by a qualified independent testing agency. Photometric data for remaining luminaires shall be certified by manufacturer.
6. Wiring diagrams for power, control, and signal wiring.
7. Photoelectric relays.
8. Means of attaching luminaires to supports and indication that the attachment is suitable for components involved.

B. Shop Drawings: For nonstandard or custom luminaires..

1. Include plans, elevations, sections, and mounting and attachment details.
2. Include details of luminaire assemblies. Indicate dimensions, weights, loads, required clearances, method of field assembly, components, and location and size of each field connection.
3. Include diagrams for power, signal, and control wiring.

C. Samples: For each luminaire and for each color and texture indicated with factory-applied finish.

D. Product Schedule: For luminaires and lamps. Use same designations indicated on Drawings.

E. Delegated-Design Submittal: For luminaire supports.
1. Include design calculations for luminaire supports and seismic restraints.

1.5 INFORMATIONAL SUBMITTALS

A. Coordination Drawings: Plans, drawn to scale, on which the following items are shown and coordinated with each other, using input from installers of the items involved.
1. Luminaires.
2. Structural members to which equipment and luminaires will be attached.
3. Underground utilities and structures.
4. Existing underground utilities and structures.
5. Above-grade utilities and structures.
6. Existing above-grade utilities and structures.
7. Building features.
8. Vertical and horizontal information.

B. Qualification Data: For testing laboratory providing photometric data for luminaires.

C. Seismic Qualification Data: For luminaires, accessories, and components, from manufacturer.
1. Basis for Certification: Indicate whether withstand certification is based on actual test of assembled components or on calculation.
2. Dimensioned Outline Drawings of Equipment Unit: Identify center of gravity and locate and describe mounting and anchorage provisions.
3. Detailed description of equipment anchorage devices on which the certification is based and their installation requirements.

D. Product Certificates: For each type of the following:
1. Luminaire.
2. Photoelectric relay.

E. Product Test Reports: For each luminaire, for tests performed by a qualified testing agency.

F. Source quality-control reports.

G. Sample warranty.

1.6 CLOSEOUT SUBMITTALS

A. Operation and Maintenance Data: For luminaires to include in operation and maintenance manuals:
1. Provide a list of all lamp types used on Project. Use ANSI and manufacturers' codes.
2. Provide a list of all photoelectric relay types used on Project; use manufacturers' codes.

1.7 MAINTENANCE MATERIAL SUBMITTALS

A. Furnish extra materials that match products installed and that are packaged with protective covering for storage and identified with labels describing contents.
   1. Lamps: Ten for every 100of each type and rating installed. Furnish at least one of each type.
   2. Glass, Acrylic, and Plastic Lenses, Covers, and Other Optical Parts: One for every 100of each type and rating installed. Furnish at least one of each type.
   3. Diffusers and Lenses: One for every 100 of each type and rating installed. Furnish at least one of each type.
   4. Globes and Guards: One for every 20of each type and rating installed. Furnish at least one of each type.

1.8 QUALITY ASSURANCE

A. Luminaire Photometric Data Testing Laboratory Qualifications: Luminaire manufacturers' laboratory that is accredited under the NVLAP for Energy Efficient Lighting Products.

B. Luminaire Photometric Data Testing Laboratory Qualifications: Provided by an independent agency, with the experience and capability to conduct the testing indicated, that is an NRTL as defined by OSHA in 29CFR1910.7, accredited under the NVLAP for Energy Efficient Lighting Products and complying with applicable IES testing standards.

C. Provide luminaires from a single manufacturer for each luminaire type.

D. Each luminaire type shall be binned within a three-step MacAdam Ellipse to ensure color consistency among luminaires.

E. Installer Qualifications: An authorized representative who is trained and approved by manufacturer.

F. Mockups: For exterior luminaires, complete with power and control connections.
   1. Obtain Architect's approval of luminaires in mockups before starting installations.
   2. Maintain mockups during construction in an undisturbed condition as a standard for judging the completed work.
   3. Approval of mockups does not constitute approval of deviations from the Contract Documents contained in mockups unless Architect specifically approves such deviations in writing.
   4. Subject to compliance with requirements, approved mockups may become part of the completed Work if undisturbed at time of Substantial Completion.

1.9 DELIVERY, STORAGE, AND HANDLING

A. Protect finishes of exposed surfaces by applying a strippable, temporary protective covering prior to shipping.

1.10 FIELD CONDITIONS

A. Verify existing and proposed utility structures prior to the start of work associated with luminaire installation.

B. Mark locations of exterior luminaires for approval by Architect prior to the start of luminaire installation.

1.11 WARRANTY

A. Warranty: Manufacturer and Installer agree to repair or replace components of luminaires that fail in materials or workmanship within specified warranty period.
   1. Failures include, but are not limited to, the following.
      a. Structural failures, including luminaire support components.
      b. Faulty operation of luminaires and accessories.
      c. Deterioration of metals, metal finishes, and other materials beyond normal weathering.
   2. Warranty Period: 2 year(s) from date of Substantial Completion.

PART 2 - PRODUCTS

2.1 PERFORMANCE REQUIREMENTS

A. Seismic Performance: Luminaires shall withstand the effects of earthquake motions determined according to ASCE/SEI 7.

B. Seismic Performance: Luminaires and lamps shall be labeled vibration and shock resistant.
   1. The term "withstand" means "the luminaire will remain in place without separation of any parts when subjected to the seismic forces specified and the luminaire will be fully operational during and after the seismic event.

2.2 LUMINAIRE REQUIREMENTS

A. Electrical Components, Devices, and Accessories: Listed and labeled as defined in NFPA 70, by a qualified testing agency, and marked for intended location and application.

B. NRTL Compliance: Luminaires shall be listed and labeled for indicated class and division of hazard by an NRTL.

C. FM Global Compliance: Luminaires for hazardous locations shall be listed and labeled for indicated class and division of hazard by FM Global.

D. UL Compliance: Comply with UL 1598 and listed for wet location.

E. Lamp base complying with ANSI C81.61.

F. Bulb shape complying with ANSI C79.1.

G. CRI of minimum 80. CCT of 3000 K.

H. L70 lamp life of 35,000 hours.

I. Lamps dimmable from 100 percent to 0 percent of maximum light output.

J. Internal driver.

K. Nominal Operating Voltage: 120 V ac.

L. Lamp Rating: Lamp marked for outdoor use and in enclosed locations.

M. Source Limitations: Obtain luminaires from single source from a single manufacturer.

N. Source Limitations: For luminaires, obtain each color, grade, finish, type, and variety of luminaire from single source with resources to provide products of consistent quality in appearance and physical properties

2.3 LUMINAIRE-MOUNTED PHOTOELECTRIC RELAYS

A. Comply with UL 773 or UL 773A..

B. Contact Relays: Factory mounted, single throw, designed to fail in the on position, and factory set to turn light unit on at 1.5 to 3 fc(16 to 32 lx)and off at 4.5 to 10 fc (48 to 108 lx)with 15-second minimum time delay.
   1. Relay with locking-type receptacle shall comply with ANSI C136.10.
   2. Adjustable window slide for adjusting on-off set points.

2.4 LUMINAIRE TYPES

A. Border:

   1. Shape: Square.
   2. Dimensions: 12 inches (300 mm).
   3. Flush with grade.
   4. Diffusers and Globes: Diffuse glass.
   5. Housings:.
      a. Extruded-aluminum housing and heat sink.
      b. Clear anodized finish.

2.5 MATERIALS

A. Metal Parts: Free of burrs and sharp corners and edges.

B. Sheet Metal Components: Corrosion-resistant aluminum. Form and support to prevent warping and sagging.

C. Doors, Frames, and Other Internal Access: Smooth operating, free of light leakage under operating conditions, and designed to permit relamping without use of tools. Designed to prevent doors, frames, lenses, diffusers, and other components from falling accidentally during relamping and when secured in operating position. Doors shall be removable for cleaning or replacing lenses.

D. Diffusers and Globes.
   1. Acrylic Diffusers: 100 percent virgin acrylic plastic, with high resistance to yellowing and other changes due to aging, exposure to heat, and UV radiation.
   2. Glass: Annealed crystal glass unless otherwise indicated.
   3. Lens Thickness: At least 0.125 inch (3.175 mm) minimum unless otherwise indicated

E. Lens and Refractor Gaskets: Use heat- and aging-resistant resilient gaskets to seal and cushion lenses and refractors in luminaire doors.

F. Reflecting surfaces shall have minimum reflectance as follows unless otherwise indicated.
   1. White Surfaces: 85 percent.
   2. Specular Surfaces: 83 percent.
   3. Diffusing Specular Surfaces: 75 percent.

G. Housings:
   1. Rigidly formed, weather- and light-tight enclosure that will not warp, sag, or deform in use.

2. Provide filter/breather for enclosed luminaires.

H. Factory-Applied Labels: Comply with UL 1598. Include recommended lamps. Labels shall be located where they will be readily visible to service personnel, but not seen from normal viewing angles when lamps are in place.
   1. Label shall include the following lamp characteristics:
      a. Label shall include the following lamp characteristics.
      b. Lamp diameter, shape, size, wattage and coating.
      c. CCT and CRI for all luminaires.

2.6 FINISHES

A. Variations in Finishes: Noticeable variations in same piece are unacceptable. Variations in appearance of adjoining components are acceptable if they are within the range of approved Samples and are assembled or installed to minimize contrast.

B. Luminaire Finish: Manufacturer's standard paint applied to factory-assembled and -tested luminaire before shipping. Where indicated, match finish process and color of pole or support materials.

2.7 LUMINAIRE SUPPORT COMPONENTS

A. Comply with requirements in Section 26 05 29 "Hangers and Supports for Electrical Systems" for channel and angle iron supports and nonmetallic channel and angle supports

PART 3 - EXECUTION

3.1 EXAMINATION

A. Examine substrates, areas, and conditions, with Installer present, for compliance with requirements for installation tolerances and other conditions affecting performance of the Work.

B. Examine roughing-in for luminaire electrical conduit to verify actual locations of conduit connections before luminaire installation.

C. Examine walls, roofs, and canopy ceilings and overhang ceilings for suitable conditions where luminaires will be installed.

D. Proceed with installation only after unsatisfactory conditions have been corrected.

3.2 TEMPORARY LIGHTING

A. If approved by the Architect, use selected permanent luminaires for temporary lighting. When construction is substantially complete, clean luminaires used for temporary lighting and install new lamps.

3.3 GENERAL INSTALLATION REQUIREMENTS

A. Comply with NECA 1.

B. Use fastening methods and materials selected to resist seismic forces defined for the application and approved by manufacturer.

C. Install lamps in each luminaire.

D. Fasten luminaire to structural support.

E. Supports:

1. Sized and rated for luminaire weight.
2. Able to maintain luminaire position after cleaning and relamping.
3. Support luminaires without causing deflection of finished surface.
4. Luminaire-mounting devices shall be capable of supporting a horizontal force of 100 percent of luminaire weight and a vertical force of 400 percent of luminaire weight.

F. Wall-Mounted Luminaire Support:
1. Attached to structural members in walls.

G. Wiring Method: Install cables in raceways. Conceal raceways and cables.

H. Install luminaires level, plumb, and square with finished grade unless otherwise indicated.

I. Coordinate layout and installation of luminaires with other construction.

J. Adjust luminaires that require field adjustment or aiming.

K. Comply with requirements in Section 26 05 19 “Wire and Cable” and Section 26 05 33 “Electrical Raceway Systems” for wiring connections and wiring methods.

3.4 BOLLARD LUMINAIRE INSTALLATION

A. Align units for optimum directional alignment of light distribution.
1. Install on concrete base with top 4 inches (100 mm) above finished grade or surface at luminaire location. Cast conduit into base, and shape base to match shape of bollard base. Finish by troweling and rubbing smooth. Concrete materials, installation, and finishing are specified in Section 033000 "Cast-in-Place Concrete.

3.5 CORROSION PREVENTION

A. Aluminum: Do not use in contact with earth or concrete. When in direct contact with a dissimilar metal, protect aluminum by insulating fittings or treatment.

B. Steel Conduits: Comply with Section 26 05 33 “Electrical Raceway Systems.” In concrete foundations, wrap conduit with 0.010-inch- (0.254-mm-) thick, pipe-wrapping plastic tape applied with a 50 percent overlap.

3.6 IDENTIFICATION

A. Identify system components, wiring, cabling, and terminals. Comply with requirements for identification specified in Section 26 05 53 “Electrical Raceway Systems.”

B. Comply with requirements in Section 26 05 26 “Grounding.”

3.7 FIELD QUALITY CONTROL

A. Inspect each installed luminaire for damage. Replace damaged luminaires and components.

B. Perform the following tests and inspections:
1. Operational Test: After installing luminaires, switches, and accessories, and after electrical circuitry has been energized, test units to confirm proper operation.
2. Verify operation of photoelectric controls.

C. Illumination Tests:
   1. Measure light intensities at night. Use photometers with calibration referenced to NIST standards. Comply with the following IES testing guide(s).
      a. IESLM-5
      b. IESLM-50.
      c. IESLM-52.
      d. IESLM-64.
      e. IESLM-72.
   2. Operational Test: After installing luminaires, switches, and accessories, and after electrical circuitry has been energized, test units to confirm proper operation.

D. Luminaire will be considered defective if it does not pass tests and inspections.

E. Prepare a written report of tests, inspections, observations, and verifications indicating and interpreting results. If adjustments are made to lighting system, retest to demonstrate compliance with standards.

3.8 DEMONSTRATION

A. Train Owner's maintenance personnel to adjust, operate, and maintain luminaires and photocell relays.

3.9 ADJUSTING

A. Occupancy Adjustments: When requested within 12 months of date of Substantial Completion, provide on-site assistance in adjusting the direction of aim of luminaires to suit occupied conditions. Make up to two visits to Project during other-than-normal hours for this purpose. Some of this work may be required during hours of darkness.
   1. During adjustment visits, inspect all luminaires. Replace lamps or luminaires that are defective.
   2. Parts and supplies shall be manufacturer's authorized replacement parts and supplies.
   3. Adjust the aim of luminaires in the presence of the Architect.

END OF SECTION

SECTION 31 10 00 – SITE CLEARING

PART 1 - GENERAL

1.01 RELATED DOCUMENTS

A. Drawings and general provisions of the Contract, including General and Supplementary Conditions and Division 01 Specification Sections, apply to this Section.

1.02 WORK INCLUDED:

The work within this section consists of removing all trees, shrubs, brush, and similar vegetation or other debris within the limits of the rights-of-way, and construction area as shown in the drawings. All large rocks or boulders that interfere with the construction of the project shall be removed from the site. Trees (if any) within the rights-of-way or easements not shown for removal are to be protected.

1.03 SUMMARY

A. Section Includes:

1. Protecting existing vegetation to remain.
2. Removing existing vegetation.
3. Clearing and grubbing.
4. Stripping and stockpiling topsoil.
5. Removing above- and below-grade site improvements.
6. Disconnecting, capping or sealing, removing site utilities and abandoning site utilities in place.
7. Temporary erosion and sedimentation control measures.

B. Related Sections:

1. Section 01 00 00 "Summary of Work" for temporary utility services, construction and support facilities, and temporary erosion- and sedimentation-control measures.

1.04 DEFINITIONS

A. Subsoil: All soil beneath the topsoil layer of the soil profile, and typified by the lack of organic matter and soil organisms.

B. Topsoil: Top layer of the soil profile consisting of existing native surface topsoil or existing in-place surface soil and is the zone where plant roots grow.

C. Vegetation: Trees, shrubs, groundcovers, grass, and other plants.

1.05 MATERIAL OWNERSHIP

A. Unused topsoil is to be stockpiled at an owner-designated location at the Borough Community Garden (formerly the Lion's Club Ball Field), adjacent to City Park on Zimovia Highway.

B. Disposal of unusable overburden and other excess material is at Contractor's expense.

1.06 INFORMATIONAL SUBMITTALS

A. Existing Conditions: Documentation of existing trees and plantings, adjoining construction, and site improvements that establishes preconstruction conditions that might be misconstrued as damage caused by site clearing.

1. Use sufficiently detailed photographs or videotape.
2. Include plans and notations to indicate specific wounds and damage conditions of each tree or other plants designated to remain.

B. Record Drawings: Identifying and accurately showing locations of capped utilities and other subsurface structural, electrical, and mechanical conditions.

1.07 PROJECT CONDITIONS

A. Traffic: Minimize interference with adjoining roads, streets, walks, and other adjacent occupied or used facilities during site-clearing operations.

1. Do not close or obstruct streets, walks, or other adjacent occupied or used facilities without permission from Owner and authorities having jurisdiction.
2. Provide alternate routes around closed or obstructed traffic ways if required by Owner or authorities having jurisdiction.
3. All necessary closures shall be closely coordinated with the City, State, Engineer, and emergency services.

B. Improvements on Adjoining Property: Authority for performing site clearing indicated on property adjoining Owner's property will be obtained by Owner before award of Contract.

1. Do not proceed with work on adjoining property until directed by Engineer/Owner.

C. Salvageable Improvements: Carefully remove items indicated to be salvaged and store on Owner's premises where indicated.

D. Utility Locator Service: Notify utility locator service for area where Project is located before site clearing.

E. Do not commence site clearing operations until temporary erosion- and sedimentation-control and plant-protection measures are in place.

F. Soil Stripping, Handling, and Stockpiling: Perform only when the topsoil is dry or slightly moist.

PART 2 - PRODUCTS NONE

PART 3 - EXECUTION

3.01 PREPARATION

A. Protect and maintain benchmarks and survey control points from disturbance during construction.

B. Protect existing site improvements to remain from damage during construction.
1. Restore damaged improvements to their original condition, as acceptable to Owner.

3.02 TEMPORARY EROSION AND SEDIMENTATION CONTROL

A. The CONTRACTOR shall be responsible for obtaining and maintaining a Stormwater Pollution Prevention Plan, if necessary.

B. Provide temporary erosion and sedimentation control measures to prevent soil erosion and discharge of soil-bearing water runoff or airborne dust to adjacent properties and walkways, according to erosion and sedimentation control Drawings and requirements of authorities having jurisdiction.

C. Verify that flows of water redirected from construction areas or generated by construction activity do not enter or cross protection zones.

D. Inspect, maintain, and repair erosion- and sedimentation-control measures during construction until permanent vegetation has been established.

E. Remove erosion and sedimentation controls and restore and stabilize areas disturbed during removal.

3.03 EXISTING UTILITIES

A. The gravity sanitary sewer and piping shall remain in service for the duration of the project. Removal and disposal of existing utilities serving the existing treatment facility shall not be removed until approval is given by the Engineer.

B. Owner will arrange for disconnecting and sealing indicated utilities that serve existing structures before site clearing, when requested by Contractor.
   1. Verify that utilities have been disconnected and capped before proceeding with site clearing.

C. Locate, identify, disconnect, and seal or cap utilities indicated to be removed or abandoned in place as indicated on the construction drawings.
   1. Arrange with utility companies and/or Owner to shut off indicated utilities.

D. Interrupting Existing Utilities: Do not interrupt utilities serving facilities occupied by Owner or others unless permitted under the following conditions and then only after arranging to provide temporary utility services according to requirements indicated:
   1. Notify Engineer and Owner not less than two days in advance of proposed utility interruptions.
   2. Do not proceed with utility interruptions without Engineer's written permission.

E. Excavate for and remove underground utilities indicated to be removed. Unless indicated on the drawings, all removed underground utilities shall be disposed of in a lawful manner at no additional cost to the Owner.

3.04 CLEARING AND GRUBBING

A. CONTRACTOR shall remove all trees, stumps, roots, shrubs, brush, tall grass, vegetation and other debris as may be required for the proper conduct and execution of the work. All work shall be performed in a safe and prudent manner. Removal and subsequent disposal of all material shall be the complete responsibility of the CONTRACTOR. Removal means all parts of the tree or brush, including the portion of the stump within 24 inches of the ground surface. Except in areas

to be excavated, stump holes and other holes from which obstructions are removed shall be backfilled with suitable material and compacted.

B. Disposal of all material resulting from clearing and grubbing shall be the complete responsibility of the CONTRACTOR at no additional cost to the OWNER.

3.05 TOPSOIL STRIPPING

A. Remove sod and grass before stripping topsoil.

B. Strip topsoil to depth of 6 inches in a manner to prevent intermingling with underlying subsoil or other waste materials.
   1. Remove subsoil and nonsoil materials from topsoil, including clay lumps, gravel, and other objects more than 2 inches in diameter; trash, debris, weeds, roots, and other waste materials.

C. Stockpile topsoil away from edge of excavations without intermixing with subsoil. Grade and shape stockpiles to drain surface water. Cover to prevent windblown dust and erosion by water.
   1. Limit height of topsoil stockpiles to 72 inches.
   2. Do not stockpile topsoil within protection zones.
   3. Dispose of surplus topsoil. Surplus topsoil is that which exceeds quantity indicated to be stockpiled or reused.
   4. Stockpile surplus topsoil to allow for respreading deeper topsoil.

3.06 SITE IMPROVEMENTS

A. Remove existing above- and below-grade improvements as indicated and necessary to facilitate new construction.

B. Remove slabs, paving, curbs, gutters, and aggregate base as indicated.
   1. Unless existing full-depth joints coincide with line of demolition, neatly saw-cut along line of existing pavement to remain before removing adjacent existing pavement. Saw-cut faces vertically.
   2. Paint cut ends of steel reinforcement in concrete to remain with two coats of antirust coating, following coating manufacturer's written instructions. Keep paint off surfaces that will remain exposed.

3.07 DISPOSAL OF SURPLUS AND WASTE MATERIALS

A. Remove surplus soil material, unsuitable topsoil, obstructions, demolished materials, and waste materials including trash and debris, and legally dispose of them.

B. Disposal of all material resulting from clearing and grubbing shall be the complete responsibility of the CONTRACTOR at no additional cost to the OWNER.

3.08 REQUIREMENTS:

A. The CONTRACTOR shall remove all trees, stumps, roots, shrubs, brush, tall grass, vegetation and other debris as may be required for the proper conduct and execution of the work. All work shall be performed in a safe and prudent manner. Removal and subsequent disposal of all material shall be the complete responsibility of the CONTRACTOR. Removal means all parts of the tree or brush, including the portion of the stump within 24 inches of the ground surface. Except in

areas to be excavated, stump holes and other holes from which obstructions are removed shall be backfilled with suitable material and compacted.

B. Materials and debris shall be disposed of in a permitted location and all fees paid by the CONTRACTOR. The CONTRACTOR shall make all necessary arrangements for obtaining suitable disposal locations, and the cost involved shall be included in the CONTRACTOR's bid price.
   1. Topsoil stripped from the project site and not incorporated into the revegetation shall be stockpiled at an Owner-designated location at the Borough Community Garden (formerly the Lion's Club Ballfield), adjacent to the City Park on Zimovia Highway.

C. Signs, poles, posts, mailboxes, and similar items to be temporarily removed and replaced are to be protected from damage during removal and replacement. Items damaged by the CONTRACTOR shall be replaced at the CONTRACTOR's expense.

D. Disposal of all material resulting from clearing and grubbing shall be the complete responsibility of the CONTRACTOR at no additional cost to the OWNER.

END OF SECTION

SECTION 31 20 00 - EARTH MOVING

PART 1 - GENERAL

1.1 SUMMARY

A. This section covers the furnishing of materials, labor, equipment, and supervision required to complete the site earthwork construction including roadway, walkway, parking lot, and building excavation, fill, backfill, site grading, and drainage as shown on the contract Drawings.

B. Section Includes:
1. Preparing subgrades for slabs-on-grade, walks, turf grasses and plants.
2. Excavating and backfilling for buildings and structures.
3. Drainage course for concrete slabs-on-grade.
4. Subbase course for concrete walks pavements.
5. Subbase course and base course for asphalt paving.
6. Subsurface drainage backfill for walls and trenches.
7. Excavating and backfilling trenches for utilities and pits for buried utility structures.

C. Related Sections:
1. Section 033000 "Cast-in-Place Concrete" for granular course if placed over vapor retarder and beneath the slab-on-grade.
2. Section 311000 "Site Clearing" for site stripping, grubbing, stripping and stockpiling topsoil, and removal of above- and below-grade improvements and utilities.
3. Section 315000 "Excavation Support and Protection" for shoring, bracing, and sheet piling of excavations.

1.2 DEFINITIONS

A. NFS Material: NFS material is sand, gravel, crushed stone, or mixtures thereof, which contains no more than three percent particles finer than 0.02 mm by weight.

B. Classified Material
1. NFS, unfrozen, inorganic soils meeting the following gradation requirements for the minus three-inch fraction.

Sieve Size	Percent Passing by Weight
3"	100*
1-1/2"	70-100
3/4"	30-100
1/2"	25-100
No. 4	20-49
No. 40	0-25
No. 200	0-6
0.02 mm	0-3

* The fill may contain up to 10% cobbles.

C. Unclassified Material: Inorganic soils free of trash, peat, volcanic ash, debris, or frozen clods, which are capable of being satisfactorily compacted as required by the plans and these specifications.

D. Unsuitable Material: Soil materials that do not qualify as “classified” or “unclassified”

* The field sample may contain up to 10% cobbles, which should be discarded prior to testing.

materials.

E. General Excavation: Any excavation of any type of material, including rock and frozen material, within the limits of excavation as shown on the Drawings or called for in the specifications.

F. Subgrade: The surface upon which classified or unclassified material is placed. Uppermost surface of an excavation or the top surface of a fill or backfill immediately below subbase, drainage fill, drainage course, or topsoil materials.

G. Area Grading: Area grading consists of the excavation and fill work along the perimeter of the site necessary for a smooth transition from the design site grades to the grade(s) of the adjacent properties. This work is also commonly called "site grading" or "overlot grading."

H. Work Area: For purposes of determining the number of required in-place density tests, work area is defined as the location where fill is being actively placed at any one time. The work area could be the entire site or a small fraction of the site depending on how the earthwork is performed.

I. Backfill: Soil material or controlled low-strength material used to fill an excavation.
   1. Backfill material obtained from trenches or on on-site excavations free of cinders, ash, refuse, organic or frozen material, boulders, or other deleterious materials.

J. Base Course: Aggregate layer placed between the subbase course and hot-mix asphalt paving.

K. Bedding Course: Aggregate layer placed over the excavated subgrade in a trench before laying pipe.

L. Borrow Soil: Soil imported from off-site for use as fill or backfill.

M. Drainage Course: Aggregate layer supporting the slab-on-grade that also minimizes upward capillary flow of pore water.

N. Excavation: Removal of material encountered above subgrade elevations and to lines and dimensions indicated.
   1. Authorized Additional Excavation: Excavation below subgrade elevations or beyond indicated lines and dimensions as directed by Engineer. Authorized additional excavation and replacement material will be paid for according to Contract provisions for changes in the Work.
   2. Bulk Excavation: Excavation more than 10 feet in width and more than 30 feet in length.
   3. Unauthorized Excavation or Over Excavation: Excavation below subgrade elevations or beyond indicated lines and dimensions without direction by Engineer. Unauthorized excavation, as well as remedial work directed by Engineer, shall be without additional compensation.

O. Structural Fill: Soil materials used to raise existing grades or replace less suitable material.

P. Rock: Rock material in beds, ledges, unstratified masses, conglomerate deposits, and boulders of rock material that exceed 10 cy for bulk excavation or 5 cy for footing, trench, and pit excavation that cannot be removed by rock excavating equipment equivalent to the following in size and performance ratings, without systematic drilling, ram hammering, ripping, or blasting, when permitted:
   1. Excavation of Footings, Trenches, and Pits: Late-model, track-mounted hydraulic

excavator; equipped with a 42-inch- wide, maximum, short-tip-radius rock bucket; rated at not less than 138-hp flywheel power with bucket-curling force of not less than 28,700 lbf and stick-crowd force of not less than 18,400 lbf with extra-long reach boom; measured according to SAE J-1179.

Q. Structures: Buildings, footings, foundations, retaining walls, slabs, tanks, curbs, mechanical and electrical appurtenances, or other man-made stationary features constructed above or below the ground surface.

R. Subbase Course: Aggregate layer placed between the subgrade and base course for hot-mix asphalt pavement, or aggregate layer placed between the subgrade and a cement concrete pavement or a cement concrete or hot-mix asphalt walk.

S. Utilities: On-site underground pipes, conduits, ducts, and cables, as well as underground services within buildings.

1.3 TESTING

A. Where compaction requirements are specified, the maximum soil density shall be determined by one of the laboratory procedures listed below. The particle size distribution of the soil dictates which laboratory procedure should be used.

2. Soils meeting the following gradation requirement and having cohesionless, free-draining characteristics should be tested in accordance with ASTM D 4253 "Maximum Index Density and Unit Weight of Soils Using a Vibratory Table."

Sieve Size	Percent Passing by Weight
3"	100*
1-1/2"	70-100
No. 200	0-15

3. Soils which do not meet the gradation requirement presented in Item 1 above and which do meet the following gradation requirement should be tested in accordance with ASTM D 1557 "Laboratory Compaction Characteristics of Soil Using Modified Effort [56,000 ft-lb/ft^3 (2,700 kN-m/m^3)]."

The oversize fraction (retained on the No. 4, three-eighth inch or three-fourth inch sieve, as appropriate) should not be used in performing the D 1557 compaction test. The modified maximum dry unit weight of soils that contain more than five percent oversize should be corrected in accordance with ASTM D 4718, "Correction of Unit Weight and Water Content for Soils Containing Oversize Particles."

Sieve Size	Percent Passing by Weight
3"	100*
3/4"	70-100

4. Soils that do not meet the gradation requirements presented in Items 1 and 2 above should be tested in accordance with one of the methods listed above that have been modified with the concurrence of the project geotechnical engineer.

* The field sample may contain up to 10% cobbles, which should be discarded prior to testing.

B. The in-place soil density shall be determined in accordance with:

ASTM D 6938	In-place Density and Water Content of Soil and Soil Aggregate by Nuclear Methods (Shallow Depth).

C. In-place density tests shall be taken on each lift of fill or backfill at the rate of one test per 5,000 square feet of compacted work area. Failing test areas shall be recompacted and retested until the compaction requirements are met.

1.4 SUBMITTALS

A. Contractor shall submit a gradation test in accordance with ASTM D 422 on each type and source of material used in fills and backfills. If material is to be non-frost susceptible (NFS), hydrometer tests shall be performed in accordance with ASTM D 422.

B. Pre-excavation Photographs or Videotape: Show existing conditions of adjoining construction and site improvements, including finish surfaces, that might be misconstrued as damage caused by earth moving operations. Submit before earth moving begins.

C. Product Data: For each type of the following manufactured products required:
1. Geotextiles.
2. Controlled low-strength material, including design mixture.
3. Warning tapes.

D. Samples for Verification: For the following products, in sizes indicated below:
1. Geotextile: 12 by 12 inches.
2. Warning Tape: 12 inches long; of each color.

1.5 PROJECT CONDITIONS

A. Utility Locator Service: Notify utility locator service for area where Project is located before beginning earth moving operations.

B. Do not commence earth moving operations until temporary erosion- and sedimentation-control measures, specified in Section 311000 "Site Clearing," are in place.

C. The following practices are prohibited within protection zones:
1. Erection of sheds or structures.
2. Impoundment of water.
3. Excavation or other digging unless otherwise indicated.
4. Attachment of signs to or wrapping materials around trees or plants unless otherwise indicated.

D. Prohibit heat sources, flames, ignition sources, and smoking within or near protection zones.

1.1 CLASSIFICATION OF TRENCH EXCAVATED MATERIAL

A. No classification of trench excavated materials will be made by OWNER or ENGINEER. Excavation and trenching work shall include the removal and subsequent handling of all earth, shale, loose or cemented gravel, loose rock, solid rock, and/or other material or materials excavated or otherwise removed in performance of the contract work, regardless of the type, character, composition, or condition thereof. It shall also include the removal and disposal of all vegetation, debris, junk, rock, broken asphalt pavement, broken concrete, brick, stone, muck, and other materials encountered within the trench excavation.

1.6 CONSTRUCTION CONSIDERATIONS

A. GENERAL

1. The CONTRACTOR is solely responsible for designing and constructing stable, temporary excavations and should shore, slope or bench the sides of the excavations as required to maintain stability of both the excavation sides and bottom. All excavations should comply with applicable local, state, and federal safety regulations including the current OSHA Excavation and Trench Safety Standards. Construction site safety generally is the sole responsibility of the CONTRACTOR, who shall also be solely responsible for the means, methods, and sequencing of construction operations. Under no circumstances should the information provided below be interpreted to mean that ENGINEER or OWNER is assuming responsibility for construction site safety or the CONTRACTOR's activities; such responsibility is not being implied and should not be inferred.

B. EXCAVATION AND SLOPES

1. In no case should slope height, slope inclination, or excavation depth, including utility trench excavation depth, exceed those specified in local, state, and federal safety regulations. Specifically, the current OSHA Health and Safety Standards for Excavations, 29 CFR Part 1926 should be followed. It is the ENGINEER's understanding that these regulations are being strictly enforced and if they are not closely followed, the CONTRACTOR could be liable for substantial penalties.
2. The CONTRACTOR'S "competent person", as defined in 29 CFR Part 1926, shall evaluate the soil exposed in the excavations as part of the CONTRACTOR'S safety procedures. If an excavation, including a trench, is more than 20 feet deep, it will be necessary to have the side slopes designed by a professional engineer registered in Montana.
3. The CONTRACTOR shall provide the name of their “competent person”. The CONTRACTOR's "competent person" shall establish a minimum lateral distance (two feet or greater) from the crest of the slope for all vehicles and spoil piles. Likewise, the CONTRACTOR'S "competent person" should establish protective measures for exposed slope faces.

PART 2 - PRODUCTS

2.1 SOIL MATERIALS

A. Native Soils: In situ or excavated material for use in backfill and embankment construction moisture conditioned and compacted as required for area of use.

B. Subbase Material: Naturally or artificially graded mixture of natural or crushed gravel, crushed stone, and natural or crushed sand; ASTM D 2940; with at least 90 percent passing a 1-1/2-inch sieve and not more than 12 percent passing a No. 200 sieve.

C. Base Course:

1. Aggregate material shall be furnished by the CONTRACTOR and the gradation of the crushed material shall meet the requirements of the gradations given in the following tables, when tested in accordance with ASTM C117 and C136.

3/4-inch Minus Surface Course

Sieve No. or Size	Percent Passing by dry weight
¾"	100
No. 4	40 – 70

No. 10	25 - 55
No. 200	2 – 12

1.5-inch Minus Crushed Aggregate Base Course

Sieve No. or Size	Percent Passing by dry weight
1½"	100
1"	90 – 100
½"	60 – 85
No. 4	45 – 65
No. 8	33 – 53
No. 200	3 – 12

3-inch Minus Crushed Aggregate Base Course

Sieve No. or Size	Percent Passing by dry weight
3"	100
No. 4	25 – 65
No. 40	10 - 30
No. 200	2 – 10

D. Structural Fill: Imported granular soil shall be used as structural fill. The imported structural fill shall consist of ¾-inch minus washed crushed gravel; standard ¾-inch minus road mix; or sandy gravel meeting the following gradation:

Sieve No. or Size	Percent Passing by dry weight
3"	100
No. 4	25-60
No. 200	0-6

*Liquid Limit less than 25 & Plasticity Index less than 6

E. Imported Pipe Foundation Material: When Imported Pipe Foundation material is authorized by the ENGINEER as specified herein, it shall meet the following gradation:

Sieve No. or Size	Percent Passing by dry weight
3"	100
1-½”	80-100
¾”	35-70
No. 4	10-35
No. 200	0-10

1. Foundation pipe bedding material shall be used below the bedding zone. This material's purpose is to provide an acceptable foundation for the bedding and pipe, when this is found to be unacceptable per 3.5. It is not intended to assist with the dewatering process.

The CONTRACTOR may use imported material to assist with dewatering, but this is at no cost to the OWNER. Any material imported by the CONTRACTOR for use in dewatering shall come from a CONTRACTOR secured source and will be subsidiary to other bid items. The CONTRACTOR shall be responsible for locating the source, excavation, haul, placement, and compaction of the Imported Pipe Foundation Material.

F. Bedding Course: Naturally or artificially graded mixture of natural or crushed gravel, crushed stone, and natural or crushed sand; ASTM D 2940; except with 100 percent passing a 1-inch sieve and not more than 10 percent passing a No. 200 sieve.

2. Imported Bedding Material shall consist of sandy gravel, fine gravel, or screened pit run which is free of cementitious substances or thin, flat particles in an amount which would cause the material to cake, pack or otherwise form an unyielding support for the pipe. When metallic pipe, valves or fittings are used, the material shall also be free of sharp angular particles which may damage coatings or other corrosion protection materials.
3. Imported bedding material shall comply with the following gradation:

Sieve No. or Size	Percent Passing by dry weight
1”	100
¾“	95-100
½“	60-100
No. 4	35-85
No. 200	0-10

4. The aggregate shall be free from vegetable matter, lumps or balls of clay, frozen material, adherent films of clay or other matter which will prevent it from flowing. The plasticity indes of bedding shall not exceed 10 as determined in accordance with ASTM D4318.
5. Where metallic pipe, valves or fittings are used, the material shall have an electrical resistivity greater than 5,000 ohm-cm in accordance with ASTM G57. This requirement includes metal valves and fittings on PVC/HDPE/Fiberglass pipe.
6. If Imported Bedding Material is used, trench plugs may be required along the pipeline, only as identified in the drawings.
7. In unusual situations, an alternative bedding can be used if proposed by the CONTRACTOR and approved by the ENGINEER. The CONTRACTOR may also use flowable fill in lieu of imported bedding, per section 2.2 below.
8. The CONTRACTOR will be responsible for locating the source and obtaining the material as well as the excavation, haul, placement and compaction of the Imported Bedding Material.

G. Drainage Course: Narrowly graded mixture of washed crushed stone, or crushed or uncrushed gravel; ASTM D 448; coarse-aggregate grading Size 57; with 100 percent passing a 1-1/2-inch sieve and 0 to 5 percent passing a No. 8 sieve.

H. Sand: ASTM C 33; fine aggregate.

I. Impervious Fill: Clayey gravel and sand mixture capable of compacting to a dense state.

J. When the quantity of classified and unclassified soils required for the work exceeds that available from excavated materials, the additional material shall be from Contractor-furnished borrow areas. The Contractor shall locate, obtain, develop, and process classified and unclassified materials to complete the requirements of work.
   1. No soils materials that have ever been contaminated with petroleum or hazardous substances shall be incorporated into the work without prior written approval of the Owner.

K. When the soils into which the excavation will penetrate and/or when the backfill soils are sensitive to erosion, sloughing under seepage forces, softening during soaking, and/or repeated loading of heavy equipment, the Contractor shall take all necessary steps to protect the work at no expense to the Owner. This may include, but is not limited to:
   1. Sloping the excavation to drain and/or dewatering from inside the excavation with sumps and/or pumps or from outside the excavation with well-points or other means;
   2. Limiting construction traffic to designated and maintained construction roads and placing additional temporary fill as necessary to support the traffic loads;
   3. Developing alternate access routes; and,
   4. Excavating with a backhoe with a smooth blade from outside the excavation.

L. If the subgrade or backfill soils are disturbed by surface runoff, ponding, seepage, and/or construction traffic, the disturbed soils shall be regraded and densified to the density requirements specified herein or completely removed and replaced with classified materials compacted to the density requirements specified herein. The Contractor shall perform corrective work at no expense to the Owner.

2.2 GEOTEXTILE

A. Geotextile shall be constructed of woven polypropylene containing heavy woven tap/fibrillated yarns, resistant to ultraviolet degradation and to biological/chemical environments normally found in soils. The geotextile shall meet or exceed the below requirements:

GEOTEXTILE FABRIC PROPERTIES		
PROPERTY	TEST VALUES MINIMUM AVERAGE ROLL VALUES	TEST METHOD
Grab Tensile Strength (lbs)	350	ASTM D4632
Grab Elongation (%)	15	ASTM D4632
Puncture Strength (lbs)	1200	ASTM D46241
Trapezoidal Tear Strength (lbs)	130	ASTM D4533
UV Resistance (% @ hrs)	70 @ 500	ASTM D4355
Apparent Opening Size (US Sieve)	30	ASTM D4751
Permittivity (sec^{-1})	0.35	ASTM D4491

Water Flow Rate (gpm/ft^2)	30	ASTM D4491

Geotextile shall be Geotex 350st by Propex or approved equal.

2.3 ACCESSORIES

A. Warning Tape: Acid- and alkali-resistant, polyethylene film warning tape manufactured for marking and identifying underground utilities 5 mils thick, continuously inscribed with a description of the utility; colored as follows: Color coding shall be in conformance with the APWA/ULCC Color Code. Warning tape shall have a minimum width of 3 inches for pipe 12 inches and smaller, and a minimum width of 12 inches for larger pipe. The maximum imprint length shall be thirty-six inches. Tape shall be Carsonite Tuff-Tape, or approved equal.
   1. Red: Electric.
   2. Yellow: Gas, oil, steam, and dangerous materials.
   3. Orange: Telephone and other communications.
   4. Blue: Water systems.
   5. Green: Sewer systems.

PART 3 - EXECUTION

3.1 PREPARATION

A. All construction zones shall be cleared and grubbed of all stumps, logs, trees, roots, brush, weeds, tree trimmings, and other vegetation or debris in accordance with Section 311000 – Site Clearing.

B. Protect structures, utilities, pavements, and other facilities from damage caused by settlement, lateral movement, undermining, washout, and other hazards created by earth moving operations.

C. Signs, poles, posts, and similar items to be temporarily removed and replaced are to be protected from damage during removal and replacement. Items damaged by the CONTRACTOR shall be replaced at the CONTRACTOR's expense.

D. Protect and maintain erosion and sedimentation controls during earth moving operations.

E. Protect subgrades and foundation soils from freezing temperatures and frost. Remove temporary protection before placing subsequent materials.

3.2 BARRICADES, GUARDS AND SAFETY PROVISIONS:

A. All excavation, trenching, shoring, and the like, under this contract shall be performed in a manner that meets with the Occupational Safety and Health Standards, 24 CFR Part 1926 Excavations, as published by the Occupational Safety and Health Administration. The CONTRACTOR shall be responsible for enforcing safety and maintaining safe working conditions in the trenching operation.

B. To protect persons from injury and to avoid property damage, adequate barricades, construction signs, warning lights, and guards, as required, shall be placed and maintained during the progress of the construction work and until it is safe to resume use of the trench area. Rules and regulations of the local authorities respecting safety provisions shall be observed.

3.3 EXPLOSIVES

A. Explosives: Do not use explosives.

3.4 EXCAVATION, GENERAL

A. Unclassified Excavation: Excavate to subgrade elevations regardless of the character of surface and subsurface conditions encountered. Unclassified excavated materials may include rock, soil materials, and obstructions. No changes in the Contract Sum or the Contract Time will be authorized for rock excavation or removal of obstructions.
   1. Remove rock to lines and grades indicated to permit installation of permanent construction without exceeding the following dimensions:
      a. 24 inches outside of concrete forms other than at footings.
      b. 12 inches outside of concrete forms at footings.
      c. 12 inches beneath bottom of concrete slabs-on-grade.
      d. 6 inches beneath pipe in trenches, and the greater of 24 inches wider than pipe or 42 inches wide.

3.5 EXCAVATION FOR WALKS AND PAVEMENTS

A. Excavate surfaces under walks and pavements to indicated lines, cross sections, elevations, and subgrades.

3.6 EXCAVATION FOR UTILITY TRENCHES

A. Excavate trenches to indicated gradients, lines, depths, and elevations.
   1. Beyond building perimeter, excavate trenches to allow installation of top of pipe below frost line.

B. Excavate trenches to uniform widths to provide the following clearance on each side of pipe or conduit. Excavate trench walls vertically from trench bottom to 12 inches higher than top of pipe or conduit unless otherwise indicated.
   1. Minimum Width of Trench: The minimum width of the trench shall be such as to provide adequate room for workers to install and join the pipe and place and compact the bedding and backfill materials in the specified manner, and not less than the outside diameter (OD) of the pipe plus two feet.
   2. Should the CONTRACTOR excavate a trench wider than stated above, he shall at his own expense, provide pipe bedding as defined in Part 2 of this section or take such other measures as the ENGINEER may direct to protect the pipe against the crushing forces of trench backfill. This specification requirement will be strictly enforced. Thus, if the CONTRACTOR plans to use excavating and traveling shield equipment which requires a wider trench than the minimum width/depth relationships specified above, he shall bid the job to use not less than enough "Imported Bedding Material" as required to install the pipe as shown on the Construction Drawings, absorbing the cost of providing and placing this material in either his trench excavation or pipe laying prices.

C. Trench Bottoms: Excavate and shape trench bottoms to provide uniform bearing and support of pipes and conduit. Shape subgrade to provide continuous support for bells, joints, and barrels of pipes and for joints, fittings, and bodies of conduits. Remove projecting stones and sharp objects along trench subgrade.
   1. Excavate trenches 6 inches deeper than elevation required in rock or other unyielding bearing material to allow for bedding course.
   2. The CONTRACTOR shall excavate as necessary at the locations shown on the drawings, staked in the field, or otherwise directed by the ENGINEER.
   3. The CONTRACTOR shall take precautions to protect all adjoining private and public property and facilities, including underground and overhead utilities, curbs, sidewalks,

driveways, structures, and fences. Any disturbed or damaged facilities will be suitably restored or replaced at no cost to the OWNER.

4. Trenches parallel to curb and gutter, sidewalk, walls, or other structures that can be disturbed by the trenching activity, shall normally be no closer than 5 feet to the structure. Special care must be made to protect these structures.
5. Excavation shall be by open cut. Concrete and asphalt shall be saw cut in a straight line to make a neat joint with no broken corners or ragged edges, and then replaced according to these specifications. If excavation must take place near a structure, lean concrete shall be used as backfill to fully support the structure. After installing pipe and backfilling as specified, other repairs (if needed) shall be made to the ENGINEER's satisfaction.
6. In fields, rights-of-way, grassy areas or other areas where topsoil is present, the CONTRACTOR shall strip the topsoil to a depth indicated by the ENGINEER, usually 12 inches. The topsoil shall be stockpiled and placed back over the trench after backfilling to restore the area to its pre-existing conditions.
7. During excavation, materials suitable for backfilling shall be piled in an orderly manner a distance of at least two feet from the banks of the trench to avoid overloading and to prevent slides or cave-ins. Excavated material shall be stockpiled to permit access to existing buildings, hydrants, valves, manholes and other appurtenances. Surface drainage of adjoining areas shall be unobstructed.
8. Grading shall be done as may be necessary to prevent surface water from flowing into excavations, and any water accumulating therein shall be promptly removed. Under no circumstances shall water be permitted to rise in trenches until after the pipe has been placed, bedded and backfilled. Any pipe having its alignment or grade changed by floating in a flooded trench shall be re-laid at no additional cost to the OWNER.

3.7 SUBGRADE INSPECTION

A. Notify Engineer when excavations have reached required subgrade.

B. If Engineer determines that unsatisfactory soil is present, continue excavation and replace with compacted backfill or fill material as directed.

C. Proof-roll subgrade below the building slabs, concrete pads, and pavements with a pneumatic-tired and loaded 10-wheel, tandem-axle dump truck weighing not less than 15 tons, or similar, to identify soft pockets and areas of excess yielding. Do not proof-roll wet or saturated subgrades.
   1. Completely proof-roll subgrade in one direction, repeating proof-rolling in direction perpendicular to first direction. Limit vehicle speed to 3 mph.
   2. Excavate soft spots and areas of excessive pumping or rutting, as determined by Engineer, and replace with structural fill as directed.

D. Authorized additional excavation and replacement material will be paid for according to Contract provisions for changes in the Work.

E. Reconstruct subgrades damaged by freezing temperatures, frost, rain, accumulated water, or construction activities, as directed by Engineer, without additional compensation.

3.8 UNAUTHORIZED EXCAVATION

A. Fill unauthorized excavation under foundations or wall footings with structural backfill placed and compacted per this specification.
   1. Fill unauthorized excavations under other construction, pipe, or conduit as directed by Engineer.

3.9 STORAGE OF SOIL MATERIALS

A. Stockpile borrow soil materials and excavated soil materials without intermixing. Place, grade, and shape stockpiles to drain surface water. Cover to prevent windblown dust.
   1. Stockpile soil materials away from edge of excavations. Do not store within drip line of remaining trees.

3.10 BACKFILL

A. Place and compact backfill in excavations promptly, but not before completing the following:
   1. Construction below finish grade including, where applicable, subdrainage, dampproofing, waterproofing, and perimeter insulation.
   2. Surveying locations of underground utilities for Record Documents.
   3. Testing and inspecting underground utilities.
   4. Removing concrete formwork.
   5. Removing trash and debris.
   6. Removing temporary shoring and bracing, and sheeting.
   7. Installing permanent or temporary horizontal bracing on horizontally supported walls.

B. Place backfill on subgrades free of mud, frost, snow, or ice.

3.11 STRUCTURAL BACKFILL:

A. Structural fill shall extend one foot horizontally beyond the footing for each foot of depth excavated below the footing. Structural fill shall be compacted to not less than 98 percent of maximum dry density at plus or minus 2 percentage points of optimum moisture content in accordance to ASTM D 698. For a material that does not exhibit a well-defined moisture density curve, 75 percent of relative density according to ASTM D 4253 or D 4254 are required. For materials that the percentage retained on the ¾ -inch sieve exceeds 30 percent, proctor values are considered general guidelines and other methods (i.e. trial compaction pads) may be utilized to ensure compaction is being achieved. If density tests indicate compaction is not being achieved, the fill should be scarified, conditioned to near optimum moisture content, re-compacted, and re-tested.

B. The first lift of structural fill shall be static rolled, with no vibration and observed for “pump” of the subgrade material.

C. A minimum 4-inch thick ¾-inch minus gravel cushion layer should be placed between the structural fill and concrete structures, unless indicated otherwise on the construction drawings.

3.12 UTILITY TRENCH BACKFILL

A. Place backfill on subgrades free of mud, frost, snow, or ice.

B. Place and compact bedding course on trench bottoms and where indicated. Shape bedding course to provide continuous support for bells, joints, and barrels of pipes and for joints, fittings, and bodies of conduits.

C. Bedding Placement
   1. All Bedding Material shall be placed into the trench to a maximum depth of 6 inches at any point after leveling, except bell holes shall have a depth of 3 to 4 inches. The use of bell holes and the placement of bedding shall provide for the full support of the pipe. When deposited in the trench, Bedding Material shall be spread, graded, and initially

compacted no more than necessary to insure a slightly yielding, uniform and continuous support for installed pipe at all points between pipe joints.

2. All Bedding Material above the bottom of the pipe shall be placed to fill any voids adjacent to the pipe, leveled, and thoroughly compacted by tamping, vibration, rodding, or by a combination of these methods. Special effort is required to compact the material under the pipe "haunches" to provide adequate support to the pipe. Placement techniques are to avoid damage to the pipe, coating on pipe and fittings, joint bonds, and corrosion protection materials. Bedding adjacent to and over the pipe is to be placed in layers not to exceed 6 inches, with each layer thoroughly compacted. Bedding adjacent to the pipe is to be placed and compacted on both sides simultaneously. Water settling of bedding is not allowed. All backfill material, equipment used, and the results obtained in placing fill material shall be subjected at all times to the approval of the pipe manufacturer and the ENGINEER.

D. BACKFILL ABOVE BEDDING MATERIAL

1. After placing Bedding Material as specified above, the remainder of the backfill in the zone designated “Backfill Above Bedding" shown on the Construction Drawings shall be placed as herein specified, in lifts not to exceed 8 inches (compacted thickness). In this zone, backfill may be placed by machine or other method or combination of methods approved by the ENGINEER, which will not impose excessive, concentrated, or unbalanced loads, thus transmitting a shock or impact to the embedded pipe which might result in damage to, or displacement of the pipe. Frozen material, snow or mud shall not be used in backfill.
2. Backfill compaction up to the bottom of the road surface of surface restoration section or up to grade for unsurfaced sections shall be compacted to not less than the following percentages of maximum density, as determined by ASTM D698.
    - Asphalt pavement - ninety-five percent (95%);
    - Portland cement concrete surface - ninety-five percent (95%);
    - Gravel surface - ninety-five percent (95%);
    - Unsurfaced areas - ninety percent (90%).

3. For backfill which shall be compacted or consolidated to a density equal to or greater than ninety percent (90%), the material shall be placed in continuous horizontal layers not to exceed the uncompacted depth of 12 inches. The CONTRACTOR shall add water or aerate material as required in placing compacted backfill to bring the material within 3% optimum moisture content. In locations where 95% compaction is specified and the excavated soil materials possess natural moisture in excess of 6% above optimum moisture as determined by ASTM D698, the material will be considered unsuitable for backfill. Either the CONTRACTOR or ENGINEER may perform the field tests to determine the in situ moisture content. When the ENGINEER determines the excavated material is unsuitable, it shall be processed by the CONTRACTOR to reduce the moisture content to an acceptable level or removed and disposed of at location of the borrow source, or at locations secured by the CONTRACTOR and approved by the ENGINEER. If the moisture content is between 3 and 6% over optimum, the CONTRACTOR shall blend or aerate the material to reduce it to less than 3% over.
4. CONTRACTOR will be responsible for all costs of excavation, haul, placement and compaction of the replacement material from a CONTRACTOR secured source.
5. If the CONTRACTOR performs winter construction, frozen material or material containing frozen chunks, mud or snow, must be replaced at the CONTRACTOR’s cost.

6. Where surface restoration is not specified, the CONTRACTOR shall grade all backfill surfaces and shall maintain them during the period of this contract in such a manner as to provide safe travel by the public, free of settlement, mud holes, ruts and high centers at no additional cost to the OWNER.
7. The CONTRACTOR may substitute lean concrete (flowable fill) in areas under streets and roads at his cost if allowed by the ENGINEER, and shall utilize lean concrete if required by the drawings.
8. Backfill around hydrants, valve boxes, manholes, inlet boxes or similar appurtenances shall be hand compacted.

E. Backfill voids with soil while removing shoring and bracing.

F. Controlled Low-Strength Material: Place final backfill of controlled low-strength material to final subgrade elevation. See Section 3.21 for requirements

G. Install warning tape directly above utilities, 12 inches below finished grade, except 6 inches below subgrade under pavements and slabs.

H. Pipe Foundation in Poor Soil
1. Soft or unstable material is defined by "material which will not support a minimum of 300 pounds per square foot" will be removed. Material that is simply wet but firm, or becomes unstable as a result of runoff into the trench or leaks resulting from the CONTRACTOR damaging new or existing water lines, shall be replaced with suitable material, as determined by the ENGINEER at no cost to the OWNER. Replacement shall be done in areas in which the foundation will not uniformly support the pipe as defined above. If soft or unstable conditions exist, the material shall be excavated to an additional depth as required by the ENGINEER and backfilled with Imported Pipe Foundation Material compacted to the pipe foundation grade (original trench bottom). The CONTRACTOR may use Imported Pipe Foundation Material in areas not requested by the ENGINEER, at his cost.
2. Where unusually bad foundation conditions are encountered at the bottom of the trench, the ENGINEER may order special foundations, other than Imported Pipe Foundation Material, to be placed. Extra compensation for unusually bad foundations will be paid for on a Change Order basis. Where this type of trench bottom stabilization is authorized, it shall be carried only up to a level 6 inches below the bottom outside of the pipe. Above this point Bedding Material shall be used.

3.13 SOIL FILL

A. Plow, scarify, bench, or break up sloped surfaces steeper than 1 vertical to 4 horizontal so fill material will bond with existing material.

B. Place and compact fill material in layers to required elevations as follows:
1. Under grass and planted areas, use appropriately conditioned native soil material.
2. Under walks and pavements, use appropriately conditioned native soil material.
3. Under steps and ramps, use engineered/structural fill.
4. Under building slabs, use engineered/structural fill.
5. Under footings and foundations, use engineered/structural fill.

C. Place soil fill on subgrades free of mud, frost, snow, or ice.

3.14 SOIL MOISTURE CONTROL

A. Uniformly moisten or aerate subgrade and each subsequent fill or backfill soil layer before compaction to within 2 percent of optimum moisture content.
   1. Do not place backfill or fill soil material on surfaces that are muddy, frozen, or contain frost or ice.
   2. Remove and replace, or scarify and air dry, otherwise soil material that exceeds optimum moisture content by 2 percent and is too wet to compact to specified dry unit weight.

3.15 COMPACTION OF SOIL BACKFILLS AND FILLS

A. Place backfill and fill soil materials in layers not more than 8 inches in loose depth for material compacted by heavy compaction equipment, and not more than 4 inches in loose depth for material compacted by hand-operated tampers.
   1. Heavy compaction equipment shall not be operated within 4-feet of concrete walls.

B. Place backfill and fill soil materials evenly on all sides of structures to required elevations, and uniformly along the full length of each structure.

C. Compact soil materials to not less than the following percentages of maximum dry unit weight according to ASTM D 698:
   1. Under structures, building slabs, steps, and pavements, scarify and recompact top 12 inches of existing subgrade and each layer of backfill or fill soil material at 95 percent.
   2. Under walkways, scarify and recompact top 6 inches below subgrade and compact each layer of backfill or fill soil material at 95 percent.
   3. Under turf or unpaved areas, scarify and recompact top 6 inches below subgrade and compact each layer of backfill or fill soil material at 95 percent.

D. Backfill material to be “benched” into existing embankments or berms. Benches to extend into the existing slope a minimum of 24-inches to provide secure bonding of the new embankment fill to the existing slope.

E. Reconditioning Compacted Areas: Where completed compacted areas are disturbed by subsequent construction operations or adverse weather, scarify surface, re-shape, and compact to required density prior to further construction.

3.16 GRADING

A. General: Uniformly grade areas to a smooth surface, free of irregular surface changes. Comply with compaction requirements and grade to cross sections, lines, and elevations indicated.
   1. Provide a smooth transition between adjacent existing grades and new grades.
   2. Cut out soft spots, fill low spots, and trim high spots to comply with required surface tolerances.

B. Site Rough Grading: Slope grades to direct water away from buildings and to prevent ponding. Finish subgrades to required elevations within the following tolerances:
   1. Turf or Unpaved Areas: Plus or minus 1 inch.
   2. Walks: Plus or minus ½ inch.
   3. Pavements: Plus or minus 1/2 inch.

C. Grading inside Building Lines: Finish subgrade to a tolerance of 1/2 inch when tested with a 10-foot straightedge.

D. Grading Surface of Fill Under Building Slabs: Grade smooth and even, free of voids, compacted as specified, and to required elevation. Provide final grades within a tolerance of ½-inch when tested with a 10-foot straightedge.

3.17 SUBBASE AND BASE COURSES UNDER PAVEMENTS AND WALKS

A. Place subbase course and base course on subgrades free of mud, frost, snow, or ice.

B. On prepared subgrade, place subbase course and base course under pavements and walks as follows:
   1. Where indicated, install separation geotextile on prepared subgrade according to manufacturer's written instructions, overlapping sides and ends.
   2. Place base course material over subbase course under hot-mix asphalt pavement.
   3. Shape subbase course and base course to required crown elevations and cross-slope grades.
   4. Place subbase course and base course 6 inches or less in compacted thickness in a single layer.
   5. Place subbase course and base course that exceeds 6 inches in compacted thickness in layers of equal thickness, with no compacted layer more than 6 inches thick or less than 3 inches thick.
   6. Compact subbase course and base course at optimum moisture content to required grades, lines, cross sections, and thickness to not less than 95 percent of maximum dry unit weight according to ASTM D 698.

C. Pavement Shoulders: Place shoulders along edges of subbase course and base course to prevent lateral movement. Construct shoulders, at least 12 inches wide, of soil materials and compact simultaneously with each subbase and base layer to not less than 95 percent of maximum dry unit weight according to ASTM D 698.

3.18 DRAINAGE COURSE UNDER CONCRETE SLABS-ON-GRADE

A. Place drainage course on subgrades free of mud, frost, snow, or ice.

B. On prepared subgrade, place and compact drainage course under cast-in-place concrete slabs-on-grade as follows:
   1. Install subdrainage geotextile on prepared subgrade according to manufacturer's written instructions, overlapping sides and ends.
   2. Place drainage course 6 inches or less in compacted thickness in a single layer.
   3. Place drainage course that exceeds 6 inches in compacted thickness in layers of equal thickness, with no compacted layer more than 6 inches thick or less than 3 inches thick.
   4. Compact each layer of drainage course to required cross sections and thicknesses to not less than 95 percent of maximum dry unit weight according to ASTM D 698.

3.19 SURFACE RESTORATION

A. Gravel roadways or parking areas: Restore to pre-existing condition or better, but not less than 6 inches of ¾” minus crushed base course.

B. Water pollution control: Water pollution from disturbed areas is to be controlled. Measures used are to comply with appropriate local, state and federal regulations.

3.20 PROTECTION

A. Protecting Graded Areas: Protect newly graded areas from traffic, freezing, and erosion. Keep free of trash and debris.

B. Repair and reestablish grades to specified tolerances where completed or partially completed surfaces become eroded, rutted, settled, or where they lose compaction due to subsequent construction operations or weather conditions.

C. Scarify or remove and replace soil material to depth as directed by Engineer; reshape and recompact.

D. Where settling occurs before Project correction period elapses, remove finished surfacing, backfill with additional soil material, compact, and reconstruct surfacing.
   1. Restore appearance, quality, and condition of finished surfacing to match adjacent work, and eliminate evidence of restoration to greatest extent possible.

3.21 DISPOSAL OF EXCESS EXCAVATED MATERIAL:

A. Except as otherwise permitted, all excess excavated materials shall be disposed of away from the site of the work. Broken concrete, asphalt and other coarse debris resulting from pavement or sidewalk removal; excavated rock in excess of the amount permitted to be and actually installed in trench backfill; junk and debris encountered in excavation work; and other similar waste materials shall be legally disposed of at a permitted location at the CONTRACTOR's expense.

B. Excess excavated material not stockpiled as requested by the property owner, shall be disposed of by the CONTRACTOR at his own expense, except as discussed below. The OWNER reserves the right to claim any excess material. The CONTRACTOR shall load the OWNER’s trucks. If required by the project Special Provisions or Project Manual, the CONTRACTOR shall haul excess material to a location designated by the OWNER.

C. Excess earth from excavations located in open fields and unimproved property may be distributed directly back over the pipe trench and within the pipeline easement (below the topsoil) to a maximum depth of 6 inches above the original ground surface elevation, at and across the trench, and sloping uniformly each way therefrom. Material thus placed shall be carefully finished with a drag, blade machine, or other suitable tools, to a smooth, uniform surface without obstructing drainage at any point. This practice shall not be used if the slight mounding interferes with irrigation practices. Wasting of excess excavated material in the above manner also will not be permitted where the line of trench crosses public road rights-of-way or is within said rights-of-way, and more or less parallels the centerline thereof.

D. No payment will be made separately or directly for haul on any part of the work. All hauling will be considered a necessary and incidental part of the work, and its cost shall be considered by the CONTRACTOR and included in the contract unit price for the pay items of work involved.

3.22 CONSTRUCTION STAKING

A. The Contractor shall furnish the surveys for construction.

3.23 EXCAVATION

A. General
   1. Excavation consists of the removal and reuse or disposal of all materials encountered to obtain the required subgrade elevations and to remove organics.
   2. Classified and unclassified excavated materials shall not be removed from the site unless they are surplus to the requirements of the work and then only with the written approval of the Owner's Representative. Excess material not incorporated in the work and unsuitable material shall be transported to the Contractor's off-site permitted disposal area. The Drawings indicate the extent of the excavation required.
   3. The Contractor shall conform to the elevations and dimensions shown on the Drawings, within a tolerance of 0.10 feet for roads, parking areas, walkways, and 0.05 for building areas. Over excavation for the purpose of obtaining materials for use elsewhere in the work is not permitted without written approval.
   4. The excavation shall be shaped to drain and shall be maintained in a dry condition, free of puddles or holes where water may accumulate. The Contractor shall plan his operation in a sequence that will provide drainage at all times. Any areas that cannot be so drained shall be kept free of standing water by pumping, if necessary.
   5. Excavation shall be performed in a manner that will not endanger adjacent structures or improvements.
   6. If hazardous materials of any kind are encountered in the excavation, Contractor shall immediately notify the Owner's Representative and stop excavation until the Owner has determined how to deal with it.
   7. When permanently frozen soils are encountered, place fill or backfill materials in a timely manner, as directed, to minimize degradation of the foundation material. Do not place fill or backfill over seasonally frozen ground unless authorized in writing.
   8. Thaw and drain frozen material deemed acceptable for fill before placing in the embankment. Frozen cuts may require stage excavation: remove thawed material and allow the cut to thaw while work continues on some other portions of the project. After the material in the cut has thawed to a sufficient depth, remove the thawed material. Repeat this operation until all frozen material is removed or the cut is excavated to grade.

B. Roadways, Parking Areas, Walkways
   1. Excavation shall be carried to the subgrade elevations required for the placement of classified material as determined by drawings. If unsuitable material is found, the Contractor shall contact the Engineer.

C. Over Excavation
   1. Over excavation shall be restored by the Contractor by backfilling with classified material and compacting to 95 percent of the maximum density at no cost to the Owner.

D. Stability of Sides
   1. The Contractor shall slope the sides of excavations to the angle required for safety or shore and brace where sloping is not possible either because of space restrictions or stability of material excavated. Maintain sides and slopes of excavations in a safe condition until completion of backfilling by scaling, benching, shelving, or bracing. Take precautions to prevent slides or cave-ins when excavations are made in locations adjacent to backfilled excavations and when sides of excavations are subjected to vibrations from vehicular traffic or the operation of machinery or any other source. In all cases the sides of all excavations shall be constructed to satisfy the requirements set forth in the local, state, and federal safety regulations regarding shoring and slope angle.

E. Cold Weather Protection
   1. The subgrade must be kept from freezing from the time earthwork begins until final acceptance of the work, unless specified otherwise in writing by the Owner's Representative.
   2. All subgrade that is allowed to freeze shall be thawed and redensified to 95 percent of the maximum density by the Contractor at no expense to the Owner, unless specified otherwise in writing by the Owner's Representative.

3.24 FILL AND BACKFILL

A. General
   1. Fill and backfill consists of the placement of classified and/or unclassified material in layers to the required elevations.
   2. All excavated materials meeting the requirements for classified and unclassified materials shall be incorporated into the work unless they are surplus to the requirements of the work and the Owner's Representative has given written approval not to use the material.
   3. The Contractor shall keep all fills and backfill well shaped, drained, and maintained.

B. Roads, Parking Areas, Walkways, Building Pad
   1. Fills and backfills shall be constructed of classified materials.
   2. The top six inches shall have a maximum particle size of 3 inches.
   3. Fills and backfills shall be constructed in lifts of 12-inch maximum thickness, [six- inch maximum thickness if hand-operated compactors are used] and compacted to not less than 95 percent of maximum density. The finished surface of fills and backfills shall be smooth with no soft or yielding areas and shall be graded to not more than 0.05 feet above or below the design grade.
   4. The Contractor shall backfill excavations as promptly as the work permits, but not until completion of the following:
      a. Owner's acceptance of construction below finish grade such as culverts, subdrains, and other utilities.
      b. Inspection, testing, approval, and recording locations of underground utilities.
      c. Removal of shoring and bracing and backfilling of any resulting voids with satisfactory materials. Cut off temporary sheet piling driven below the bottom of structures and remove in a manner to prevent settlement of the structure or utilities; or leave in-place if required.
      d. Removal of trash and debris.
      e. Placement of permanent or temporary horizontal bracing on earth retaining walls.

C. Cold Weather Protection
   1. The fill and backfill must be kept from freezing from the time earthwork begins until final acceptance of the work, unless specified otherwise in writing by the Owner's Representative.
   2. All fill and backfill which is allowed to freeze shall be thawed and redensified to 95 percent of the maximum density by the Contractor at no expense to the Owner, unless specified otherwise in writing by the Owner's Representative.

END OF SECTION

SECTION 31 25 00 – EROSION AND SEDIMENT CONTROL

PART 1 - GENERAL

1.1 DESCRIPTION

A. This section covers all labor, material, equipment, and supervision for installing and maintaining soil stabilization in areas as shown on the Drawings. At Contractor's request and with written approval, at no additional cost to the Owner, Contractor may utilize appropriate erosion control methods to aid in accomplishing topsoil and/or seeding and planting requirements.

PART 2 - PRODUCTS

2.1 PEAT MOSS

A. Natural, shredded or granulated peat of fine texture, with pH of four to six and a water absorbing capacity of 1,000 to 2,000 percent.

2.2 STRAW

A. Clean, seed free, threshed straw of wheat, barley, or rye.

2.3 JUTE MESH FABRIC

A. Cloth of uniform, open, plain weave, made with undyed and unbleached single jute yarn of loosely twisted construction. Furnish in 48-inch wide rolls, 78 warp-ends per width of cloth, 41 weft-ends per yard, and weighing approximately 1.22 pounds per lineal yard.

2.4 STAPLES

A. U-shaped, approximately six-inches long and one-inch wide made of No. 11 gauge steel wire.

PART 3 - EXECUTION

3.1 CONSTRUCTION

A. General

1. Approval to use slope protection in areas subject to significant erosion from normal weather conditions will be given. Erosion control in all other areas shall be done only with written approval. Contractor is responsible for maintenance of all graded and/or seeded areas for the duration of the project, whether protected or not.
2. Required erosion control shall be accomplished within 48 hours after finish grading of topsoil or within 24 hours after seeding. Finish grade shall be free of ruts and displacement of topsoil.

B. Slope Protection

1. Slope protection against water erosion shall be done with jute mesh fabric and wire staples. It shall be used on topsoil and/or seeded areas with slope of 10 percent or greater.
2. The Contractor shall place mesh along direction of slope, bury top and bottom ends in soil, and anchor with staples at three feet down the slope and two feet across the slope.

The staples shall be inserted to a minimum of two inches below the surface. Edges of jute mesh shall be overlapped three inches.

C. Protection of Flat Areas
   1. Protection of gentle slopes (less than 10 percent) seeded with lawn grass to prevent drying and wind erosion shall be with peat moss. Protection of gentle slopes seeded with field grass shall be with peat moss or straw. Erosion control of drainage swales shall be with straw.
   2. Peat moss shall be presoaked and scattered evenly to a depth of from one-eighth inch to one-fourth inch thick and rolled to a smooth surface. Do not mound.
   3. Straw shall be spread uniformly to form a continuous blanket not less than one and one-half inch loose thickness. Immediately following spreading, straw shall be anchored to soil with V-type wheel land packer, dish harrow or other suitable equipment to form a soil-binding mulch and prevent loss or bunching by wind.

D. Culvert Protection
   1. Contractor shall provide barriers such as, but not limited to, fiber rolls or silt fence to keep sediment from entering culverts.

END OF SECTION

SECTION 31 30 00 - ROCK EXCAVATION AND BLASTING

PART 1 - GENERAL

1.1 SUMMARY

A. Section Includes:
   1. The WORK under this Section includes providing all labor, materials, tools and equipment necessary for excavation and blasting to the lines, grades and cross sections indicated in the Drawings or as directed by the ENGINEER
   2. Removing rock during excavation.
   3. **Explosives** to assist rock removal.

B. Related Sections:
   1. Section 31 10 00 – Site Clearing
   2. Section 31 20 00 – Earth Moving
   3. Section 31 25 00 – Erosion and Sediment Control
   4. Section 31 50 00 – Excavation Support and Protection

1.2 REFERENCES

A. National Fire Protection Association:
   1. NFPA 495 - Explosive Materials Code.

1.3 SUBMITTALS

A. Section 013300 - Submittal Procedures: Submittal procedures.

B. Shop Drawings: Indicate proposed method of blasting, delay pattern, explosive types, type of blasting mat or cover, and intended rock removal method.

C. Survey Report: Submit survey report on conditions of buildings near locations of rock removal.

D. Select Borrow – sample for gradation analysis.

E. Subbase Grading A – samples for gradation analysis.

F. Shot Rock Borrow – samples for gradation and/or visual analysis.

1.4 PROJECT CONDITIONS

A. Conduct survey and document conditions of buildings near locations of rock removal, prior to blasting, **and photograph existing conditions identifying existing irregularities**.

B. Advise owners of adjacent buildings or structures in writing, prior to executing seismographic survey. Explain planned blasting and seismic operations.

C. Obtain seismic survey prior to rock excavation to determine maximum charges that can be used at different locations in area of excavation without damaging adjacent properties or other work.

1.5 SCHEDULING

A. Section 013300 Submittal Procedures.

B. Section 00 72 13 Progress Schedule submittal.

PART 2 - EXECUTION

2.1 EXAMINATION

A. Verify site conditions and note subsurface irregularities affecting Work of this section.

2.2 PREPARATION

A. Identify required lines, levels, contours, and datum.

2.3 BLASTING REQUIREMENTS FOR EXCAVATION IN ROCK

Blasting to be performed by Contractor shall be accomplished in accordance with the following:

A. Blasting Consultant: When required by the Special Provisions, Contractor shall retain the services of a specialized Blasting Consultant whose experience and qualifications are acceptable to Engineer. The consultant shall be an expert in the field of drilling and blasting who derives his primary source of income from providing specialized blasting and/or blasting consulting services. The consultant shall not be an employee of Contractor, explosives manufacturer, or explosives distributor. The Blasting Consultant's resume shall be submitted at the time of the preconstruction conference. This person shall have a minimum of 10 years' experience with blast design and significant involvement as a Blasting Specialist for a minimum of 5 major rock excavation projects involving controlled blasting. A list of these projects containing a description of the projects, details of the Blast Plans, and modifications made during the projects shall be submitted with the Blasting Consultant's resume. The list shall also contain the names and telephone numbers of Project Owners with sufficient knowledge of the Projects to verify the submitted information. The Blasting Consultant shall be approved by Engineer prior to the beginning of any drilling or blasting work, and then be available on the job site at other times as required.

B. Blaster in Charge: Contractor shall designate a Blaster in Charge who is a person authorized to act on behalf of Contractor and is licensed by the State and local regulatory agency to possess, transport, and use explosives. The Blaster in Charge shall be an employee of Contractor or blasting Subcontractor, and shall be on-site during all loading and blasting operations.

C. Comprehensive Blasting Plan: Not less than two (2) weeks prior to commencing drilling and blasting operations, or at any time Contractor proposes to change the drilling and blasting methods, Contractor shall submit a Blasting Plan to Engineer for Review. The Blasting Plan shall contain the full details of the drilling and blasting patterns and controls Contractor proposes to use for both the controlled and production blasting. The Blasting Plan shall contain the following minimum information:

1. Station limits of cut or lift.
2. Drawing with plan and section views of proposed drill pattern including free face, burden, blast hole spacing, blast hole diameters, blast hole angles, lift height, and subdrill depth.
3. Loading diagram showing type and amount of explosives, primers, initiators and location and depth of stemming.
4. Initiators sequence of blast holes including delay times and delay system.
5. Manufacturer's data sheets for all explosives, primers, and initiators to be employed.
6. Powder factor.

Review of the drilling, blasting, and excavation procedures by Engineer shall not relieve Contractor of his responsibility for the accuracy and adequacy of the plan for obtaining adequate breakage, using proper detonation procedures and following proper safety procedures prior to and after blasting.

D. Blasting Records: Contractor shall prepare and submit a blast record for each blast. The blast record shall be signed by the designated Blaster in Charge and submitted on the day of the blast and document the following:

1. Actual dimensions of the shot including hole diameter, hole depths, burden, spacing, subdrilling, stemming, powder loads, powder factor and timing.
2. A drawing or sketch showing direction of the face, and physical shot layout.
3. Location of blast in relation to the Project stationing and elevation.
4. Date and times of loading and detonation of blast.
5. Name of person in responsible charge of loading and firing.
6. Comments by Blaster in Charge regarding damage to existing facilities, adjacent property, or completed work, misfires, fly rock occurrences, unusual results, or unusual effects.

E. Public Notice: When blasting within 1,000 feet of an existing structure, Contractor shall notify the owner or occupant of the structure 24 hours in advance of the exact time the blast will occur.

F. Protection of and Coordination with Utilities: Contractor shall provide protection to public and private utilities. When blasting within 1,000 feet of an existing utility or if, in the opinion of Engineer, a blast could possibly damage an existing facility, Contractor shall notify the owner of the facility 24 hours in advance of the exact time the blast will occur. Should utility service be interrupted, damages will be assessed to Contractor for repairs and for each hour that the service is interrupted.

G. Pre-Blast Condition Survey: Contractor shall arrange for a pre-blast survey of any nearby buildings, structures, or utilities that may potentially be at risk from blasting damage. Contractor shall be responsible for any blast damage resulting from blasting. The pre-blast survey records shall be made available to Engineer for Review.

Vibration Control and Monitoring: Contractor shall arrange for vibration monitoring when blasting within 1,000 feet of buildings, structures, or utilities. The ground vibrations shall be controlled by the use of properly designed delay sequences and allowable charge weights per delay. Allowable charge weights per delay shall be based on vibration levels that will not cause damage. Carrying out trial blasts and measuring vibration levels shall establish the allowable charge weights per delay. In no case shall the maximum peak particle velocity (PPV) exceed the following:

STRUCTURE TYPE	**MAXIMUM PPV (inches per second)**
Standard Construction Timber Frame, Brick, and Concrete Buildings	2.0
Reinforced Concrete Structures	4.0
Steel Structures	4.0
Buried Utilities	2.0
Wells and Aquifers	2.0
Green Concrete (less than 7 days)	1.0

Older deteriorated structures or utilities and structures housing sensitive equipment may require lower peak particle velocity limits than given in this table. Also, buried pipelines owned by private

utility companies or bridge structures owned by other agencies are sometimes subject to lower limiting values imposed by the owner of the structure.

Contractor shall monitor each blast with an approved seismograph located, as approved, between the blast area and the closest structure subject to blast damage. The seismograph used shall be capable of recording particle velocity for three (3) mutually perpendicular components of vibration in the range generally found with controlled blasting.

Peak particle velocity of each component shall not be allowed to exceed the safe limits of the nearest structure subject to vibration damage. Contractor shall retain the services of a qualified Vibration Specialist to establish the safe vibration limits. The Vibration Specialist shall also interpret the seismograph records to insure that the seismograph data shall be effectively utilized in the control of the blasting operations with respect to the existing structures. A qualified Vibration Specialist is defined as a person with technical training in blasting vibration monitoring and control. The specialist must have had direct responsibility for establishing vibration limitations on at least five (5) projects. This Specification does not preclude the possibility that the Blasting Consultant, if qualified, could also function as the Vibration Specialist. The Vibration Specialist used shall be subject to Engineer's approval.

Data recorded for each shot shall be furnished to Engineer prior to the next blast and shall include the following:

1. Identification of instrument used.
2. Name of qualified observer and interpreter person(s) designated by the vibration specialist as qualified.
3. Distance and direction of recording station from blast area.
4. Type of ground at recording station and material on which the instrument is sitting.
5. Maximum particle velocity in each component.
6. A dated and signed copy of seismograph readings record.

H. Flyrock Control: Before the firing of any blast in areas where flying rock may result in personal injury, unacceptable delays, or damage to utilities, property or the work, the rock to be blasted shall be covered with blasting mats, soil, or other equally serviceable material, to prevent flyrock.

If flyrock from the construction site lands on private property, all blasting operations shall cease until Contractor reviews the site and determines the cause of, and solution to the flyrock problem. Before blasting proceeds, Contractor shall submit a written report to Engineer for his approval that identifies the cause of the flyrock and recommends changes to control the flyrock.

I. General: If in the opinion of Engineer, the methods of excavation required herein or adopted by Contractor are unsatisfactory in that they result in excessive rock throw, do not produce a uniform slope and shear face within the neatlines specified, or cause excessive damage to the final rock slope, Contractor shall adopt revised methods, by drilling, blasting, and excavating short sections until a technique is developed that will produce the acceptable results.

All rock that is loose, hanging, or creating a dangerous situation shall be removed during or upon completion of excavation as an integral sequence as each lift is excavated. Drilling of the next lift will not be allowed until this is completed.

2.4 ROCK REMOVAL BY MECHANICAL METHOD (EXCAVATION)

A. Clearing and grubbing in excavation areas must be completed prior to beginning excavation operations.

B. Excavations shall be reasonably smooth and uniform to the lines, grades and cross sections shown in the Drawings or as directed by the ENGINEER. Excavations shall be conducted to ensure that material outside of excavation limits remains undisturbed.

C. Excavations shall be protected from erosion and maintained to drain freely at all times.

D. Excavation in rock shall be to a minimum depth of 12 inches below the top of the finished surface within the limits, unless otherwise shown in the Contract Documents. Undrained pockets shall not be left in the excavated surface of the rock.

E. When excavation to the limits indicated on the Drawings encounters unsuitable underlying material, the ENGINEER may require the CONTRACTOR to remove the unsuitable material and backfill with approved material. The CONTRACTOR shall take the necessary cross section measurements before backfill is placed in order to measure the amount of unsuitable material removed.

F. Excavated soils that do not meet the requirements for embankment material and surplus suitable excavation shall be disposed of by the CONTRACTOR at a location and in a manner approved by the ENGINEER. No material may be wasted without the prior approval of the ENGINEER.

G. The CONTRACTOR is responsible for disposing of excess material at a permitted location or at a location approved by the City and Borough of Wrangell. If required by the ENGINEER, the CONTRACTOR shall furnish the permit numbers of all required permits for the disposal sites. The costs of securing such sites shall be borne by the CONTRACTOR.

H. Waste areas shall be uniformly graded to drain, with the outer limits feathered to blend with the existing ground. Waste areas shall be seeded, capped with suitable material, or otherwise protected from long-term erosion.

I. All excavated soils that meet the requirements for embankment material shall be placed in the embankment up to a distance of 300-feet from the point of excavation, prior to importing borrow. If the CONTRACTOR places more borrow, or selected borrow than is required and thereby causes a waste of useable excavation, the amount of such waste shall be deducted from the borrow quantity for purposes of payment.

J. Temporary storage of useable or suitable excavation is the responsibility of the CONTRACTOR, and no additional payment will be made.

K. The CONTRACTOR shall conduct all operations to prevent contaminating useable excavation with unsuitable material.

L. When frozen material is excavated and meets all other requirements for embankment material, it shall be allowed to thaw and drain prior to placing in the embankment. This material will be considered useable excavation and no additional payment will be made.

M. All organic material shall be removed to a depth of five (5) feet within the road prism and pavement structure, unless otherwise shown in the Contract Documents, or as directed by the ENGINEER.

N. The CONTRACTOR shall provide added care when excavating adjacent to existing retaining walls, fences and houses. Damage caused to existing walls, fences and houses by the CONTRACTOR shall be repaired at the CONTRACTOR's expense.

O. After excavation to the subcut limit is complete and prior to placing separation and reinforcement fabric, if required, and backfilling with Borrow, Selected Borrow or Shot Rock Borrow, the bottom of the subcut shall be compacted with an excavator or backhoe-mounted vibrating compactor until a firm base for the backfill material is obtained.

END OF SECTION

SECTION 31 50 00 - EXCAVATION SUPPORT AND PROTECTION

PART 1 - GENERAL

1.1 RELATED DOCUMENTS

A. Drawings and general provisions of the Contract, including General and Supplementary Conditions and Division 01 Specification Sections, apply to this Section.

1.2 SUMMARY

A. Section includes temporary excavation support and protection systems.

B. Related Sections:
   1. Section 01 10 00 "Summary of Work" for temporary utilities and support facilities.

1.3 PERFORMANCE REQUIREMENTS

A. Design, furnish, install, monitor, and maintain excavation support and protection system capable of supporting excavation sidewalls and of resisting soil and hydrostatic pressure and superimposed and construction loads.
   1. Delegated Design: Design excavation support and protection system, including comprehensive engineering analysis by a qualified professional engineer, using performance requirements and design criteria indicated.
   2. Prevent surface water from entering excavations by grading, dikes, or other means.
   3. Install excavation support and protection systems without damaging existing buildings, structures, and site improvements adjacent to excavation.
   4. Monitor vibrations, settlements, and movements.

1.4 ACTION SUBMITTALS

A. Delegated-Design Submittal: For excavation support and protection system indicated to comply with performance requirements and design criteria, including analysis data signed and sealed by the qualified professional engineer responsible for their preparation.

1.5 INFORMATIONAL SUBMITTALS

A. Other Informational Submittals:
   1. Photographs or Videotape: Show existing conditions of adjacent construction and site improvements that might be misconstrued as damage caused by the absence of, the installation of, or the performance of excavation support and protection systems. Submit before Work begins.
   2. Record Drawings: Identifying and locating capped utilities and other subsurface structural, electrical, or mechanical conditions.
      a. Note locations and capping depth of wells and well points.

1.6 PROJECT CONDITIONS

A. Interruption of Existing Utilities: Do not interrupt any utility serving facilities occupied by Owner or others unless permitted under the following conditions and then only after arranging to provide temporary utility according to requirements indicated:
   1. Notify Engineer no fewer than two days in advance of proposed interruption of utility.
   2. Do not proceed with interruption of utility without Engineer's written permission.

B. Project-Site Information: A geotechnical report has been prepared for this Project and is available for information only. The opinions expressed in this report are those of geotechnical engineer and represent interpretations of subsoil conditions, tests, and results of analyses conducted by geotechnical engineer. Owner will not be responsible for interpretations or conclusions drawn from the data.
   1. Make additional test borings and conduct other exploratory operations necessary for excavation support and protection.
   2. The geotechnical report is referenced elsewhere in the Project Manual.

C. Survey Work: Engage a qualified land surveyor or professional engineer to survey adjacent existing buildings, structures, and site improvements; establish exact elevations at fixed points to act as benchmarks. Clearly identify benchmarks and record existing elevations.
   1. During installation of excavation support and protection systems, regularly resurvey benchmarks, maintaining an accurate log of surveyed elevations and positions for comparison with original elevations and positions. Promptly notify Engineer if changes in elevations or positions occur or if cracks, sags, or other damage is evident in adjacent construction.

PART 2 - PRODUCTS

2.1 MATERIALS

A. General: Provide materials that are either new or in serviceable condition which will is suitable for shoring and/or bracing the imposed load.

PART 3 - EXECUTION

3.1 PREPARATION

A. Protect structures, utilities, sidewalks, pavements, and other facilities from damage caused by settlement, lateral movement, undermining, washout, and other hazards that could develop during excavation support and protection system operations.
   1. Shore, support, and protect utilities encountered.

B. Install excavation support and protection systems to ensure minimum interference with roads, streets, walks, and other adjacent occupied and used facilities.
   1. Do not close or obstruct streets, walks, or other adjacent occupied or used facilities without permission from Owner and authorities having jurisdiction. Provide alternate routes around closed or obstructed traffic ways if required by authorities having jurisdiction.

C. Locate excavation support and protection systems clear of permanent construction so that forming and finishing of concrete surfaces are not impeded.

D. Monitor excavation support and protection systems daily during excavation progress and for as long as excavation remains open. Promptly correct bulges, breakage, or other evidence of movement to ensure that excavation support and protection systems remain stable.

E. Promptly repair damages to adjacent facilities caused by installing excavation support and protection systems.

3.2 BRACING

A. Bracing: Locate bracing to clear columns, floor framing construction, and other permanent work. If necessary to move brace, install new bracing before removing original brace.
   1. Do not place bracing where it will be cast into or included in permanent concrete work unless otherwise approved by Engineer.
   2. Install internal bracing, if required, to prevent spreading or distortion of braced frames.
   3. Maintain bracing until structural elements are supported by other bracing or until permanent construction is able to withstand lateral earth and hydrostatic pressures.

3.3 REMOVAL AND REPAIRS

A. Remove excavation support and protection systems when construction has progressed sufficiently to support excavation and bear soil and hydrostatic pressures. Remove in stages to avoid disturbing underlying soils or damaging structures, pavements, facilities, and utilities.
   1. Remove excavation support and protection systems to a minimum depth of 96 inches below overlaying construction and abandon remainder.
   2. Fill voids immediately with approved backfill compacted to density specified in Section 312000 "Earth Moving."
   3. Repair or replace, as approved by Engineer, adjacent work damaged or displaced by removing excavation support and protection systems.

END OF SECTION

SECTION 33 01 10 - DISINFECTION OF WATER UTILITY PIPING SYSTEMS

PART 1 - GENERAL

1.1 SUMMARY

A. Section Includes:
   1. Disinfection of treatment plant works and disinfection of potable water distribution and transmission system.
   2. Testing and reporting of results.

1.2 REFERENCE STANDARDS

A. American Water Works Association:
   1. AWWA B300 - Hypochlorites.
   2. AWWA C651 - Disinfecting Water Mains.
   3. AWWA C653 – Disinfection of Water Treatment Plants

1.3 SUBMITTALS

A. Disinfection Procedure:
   1. Submit description of procedure, including type of disinfectant and calculations indicating quantities of disinfectants required to produce specified chlorine concentration.

B. Product Data: Submit manufacturer information for proposed chemicals and treatment doses.

C. Manufacturer's Certificate: Certify that products meet or exceed specified requirements.

D. Certify that final water complies with disinfectant quality standards of Alaska Department of Environmental Quality.

E. Test and Evaluation Reports: Indicate testing results comparative to specified requirements.

F. Field Quality-Control Submittals: Indicate results of Contractor-furnished tests and inspections.

G. Qualifications Statements:
   1. Submit qualifications for manufacturer and applicator.

1.4 CLOSEOUT SUBMITTALS

A. Disinfection Report:
   1. Type and form of disinfectant used.
   2. Date and time of disinfectant injection start and completion.
   3. Test locations.
   4. Name of person collecting samples.
   5. Initial and 24-hour disinfectant residuals in treated water in ppm for each outlet tested.
   6. Date and time of flushing start and completion.
   7. Disinfectant residual after flushing in ppm for each outlet tested.

1.5 QUALITY ASSURANCE

A. Perform Work according to AWWA C651 and/or C653 as required.

1.6 QUALIFICATIONS

A. Manufacturer: Company specializing in manufacturing products specified in this Section with minimum three years of documented experience.

B. Applicator: Company specializing in performing Work of this Section with minimum three years of documented experience.

PART 2 - PRODUCTS

2.1 DISINFECTION CHEMICALS

A. Chemicals:
   1. Hypochlorite: Comply with AWWA B300.

PART 3 - EXECUTION

3.1 GENERAL

A. Notify ENGINEER at least 48 hours prior to testing.

B. When authorities having jurisdiction are to witness tests, notify ENGINEER and authorities having jurisdiction in writing at least 48 hours in advance of testing.

C. All pipelines shall be tested; those for filtered and/or potable water shall be disinfected. All chlorinating and testing operations shall be performed in the presence of the ENGINEER.

D. Unless otherwise specified; water for testing and disinfecting pipelines will be furnished by the OWNER; however, the CONTRACTOR shall convey the water from the OWNER-designated source to the points of use.

E. Unless otherwise specified, testing shall include existing piping systems that connect with new piping system. Test existing pipe to nearest valve. Piping not installed by CONTRACTOR and that fails the test shall be repaired upon authorization of ENGINEER or OWNER. Repair of existing piping will be paid as extra work unless otherwise specified.

F. Disposal of flushing water and water containing chlorine shall be by methods acceptable to the ENGINEER.

G. Disinfection operations shall be scheduled as late as possible during the Contract Time to minimize the possibility of microbial contamination of the facilities at the time the WORK is accepted by the OWNER. Bacteriological testing shall be performed by a certified testing laboratory accepted by the OWNER. Results of the bacteriological testing shall be satisfactory with the Department of Environmental Conservation.

3.2 EXAMINATION

A. Verify that piping system has been cleaned, inspected, and pressure tested.

B. Verify that all pipe, valves, and fittings have been installed as indicated on the drawings or as required to provide a complete and operational system.

C. Perform scheduling and disinfecting activity with startup, water pressure testing, adjusting and balancing, and demonstration procedures, including coordination with related systems. Coordinate all activities with operators to ensure adequate treated water levels in the storage tank at all times.

3.3 CLEANING

A. The CONTRACTOR shall clean the system thoroughly by flushing, pigging or manual means to remove sand, grit, gravel, stones, fluids, construction waste, and all material which would not be found in a properly cleaned pipeline. The interior pipe surface shall be free from any material or fluid not used in cleaning.

B. All closed conduit piping systems shall be flushed to provide a minimum flushing velocity of 2.5 ft/sec

C. Piping 24-inch diameter and larger shall be inspected from inside and debris, dirt and foreign matter removed.

D. For piping that requires disinfection and has not been kept clean during storage or installation, swab each section individually before installation with a five (5) percent hypochlorite solution.

E. For piping that requires disinfection, flushing shall be completed before chlorination, except when hypochlorite tablets are used, flush the mains thoroughly after the pressure and leakage tests are complete.

3.4 HYDROSTATIC TESTING OF PIPING

A. Ductile Iron & Pressurized PVC Pipe
   1. Prior to hydrostatic testing, pipelines shall be flushed or blown out as appropriate. The CONTRACTOR shall test pipelines in sections. Sections to be tested shall be defined by isolation valves in the pipeline. Where such valves are not present, the CONTRACTOR shall install temporary bulkheads or plugs for the purpose of testing. Sections that have a zero leakage allowance may be tested as a unit.
   2. No section of the pipeline shall be tested until field-placed concrete or mortar has attained an age of 14 Days. The test shall be made by closing valves when available or by placing bulkheads and filling the line slowly with water. The CONTRACTOR shall be responsible for ascertaining that test bulkheads are suitably restrained to resist the thrust of the test pressure without damage to or movement of the adjacent pipe. Unharnessed sleeve-type couplings, expansion joints, or other sliding joints shall be restrained or suitably anchored prior to the test to avoid movement and damage to piping and equipment. Remove or protect any pipeline-mounted devices that may be damaged by the test pressure.
   3. The CONTRACTOR shall provide sufficient temporary tappings in the pipelines to allow for trapped air to exit. After completion of the tests, such taps shall be permanently plugged. Care shall be taken that air relief valves are open during filling.
   4. The pipeline shall be filled at a rate which will not cause any surges or exceed the rate at which the air can be released through the release valves at a reasonable velocity. The air within the pipeline shall be allowed to escape completely. The differential pressure across the orifices in the air release valves shall not be allowed to exceed 5 psi at any time during filling. After the pipeline or section thereof has been filled, it shall be allowed to stand under a slight pressure for at least 24 hours to allow the concrete or

mortar lining, as applicable, to absorb water and to allow the escape of air from air pockets. During this period, bulkheads, valves, and connections shall be examined for leaks. If leaks are found, corrective measures satisfactory to the ENGINEER shall be taken.

5. Timed test period shall not begin until after the pipe has been filled, exposed to the required wetting period, air has been expelled, and pressure stabilized.
6. The hydrostatic test shall consist of holding the indicated test pressure on the pipeline segment for a period of hours. The test pressure for yard piping shall be as indicated on the Piping Schedule measured at the lowest point of the pipeline section being tested. No pressure test will be required for a reservoir or tank overflow line. Visible leaks that appear during testing shall be repaired in a manner acceptable to the ENGINEER. Add water to restore the test pressure if the pressure decreases 5 psi below test pressure during the test period.
7. Pump from a test container to maintain test pressure. Measure volume of fluid pumped from test container and record on test report. Record pressure at test pump at fifteen minute intervals for duration of test.
8. The maximum allowable leakage shall be as indicated on the Buried Piping Testing Schedule at the end of this specification. Pipe with welded or soldered joints shall have no leakage. Exposed piping shall show no visible leaks and no pressure loss during the test. In the case of pipelines that fail to pass the leakage test, the CONTRACTOR shall determine the cause of the leakage, shall take corrective measures necessary to repair the leaks, and shall again test the pipeline, repeating as necessary until the pipeline passes.

B. HDPE Pipe

1. Water Test (Acceptance Test) Procedure: The pipe shall be slowly filled with water, bleeding off any trapped air. Subject the lowest element to 1.5 times the normal design operating pressure, corrected to the elevation of the test gauge, shall be applied by means of a pump connected to the pipe in a manner satisfactory to the ENGINEER. The pump, pipe connection, and all necessary apparatus shall be furnished by the CONTRACTOR. Before applying the specified test pressure, see pipe testing schedule, all air shall be expelled from the pipe. The CONTRACTOR shall make any necessary taps at points of highest elevation before the test is made and insert the plugs after the test has been completed.
2. For the first 3 hours of the test the pipe shall be maintained at a pressure of 1.5 time the design operating pressure. “Make-up” water shall be added to the line to stabilize the pressure.

   Immediately following the 3 hour initial expansion the pressure shall be reduced by 10 psi and stop adding “make-up” water. If the pressure remains steady, within 5% of the design pressure, for one (1) hour, no leakage is indicated.

   a. When testing against closed metal-seated valves, an additional leakage per closed valve of 0.0078 gallon per hour per inch of nominal valve size is allowed. Repair all visible leaks regardless of the amount of leakage.

C. Test Results: The cause of any leak shall be determined and leak(s) shall be acceptably repaired. Any cracked or defective pipes or fittings discovered in consequence of the pressure test shall be replaced with sound material. Should any test of pipe laid disclose leakage greater than that specified above, the CONTRACTOR shall locate and repair the defective joints, until the leakage is within the specified allowance. The CONTRACTOR may, with ENGINEER's approval, fully backfill the pipe trench prior to hydrostatic test if the trench is interfering with traffic flow, job site access or normal operations. However, it shall be understood to be the CONTRACTOR's risk if the pipe will not reach the test results specified herein. If this occurs

he must find the leaks and do the required excavation and pipe repair even though a fully backfilled trench will make this more involved and difficult.

Any section of pipe which fails the leakage test shall be repaired at the CONTRACTOR's expense. This section shall be retested after repairs are made.

3.5 TESTING NON-PRESSURIZE GRAVITY MAINS

A. The tests to be required before acceptance shall include exfiltration and infiltration, lamp test, manhole acceptance, video inspection, and deflection testing, if deemed necessary by the ENGINEER. All tests shall be performed in the presence of the ENGINEER. The ENGINEER shall be notified at least 48 hours in advance of all testing.

b. The gravity sewer shall be videoed by the Contractor prior to acceptance. The video will look for leakage and alignment/grade issues, as well as damaged pipe, debris or other conditions that do not comply with these specifications. After the CONTRACTOR makes the needed corrections, the sewer shall be re-videoed by the CONTRACTOR. This process shall be repeated as necessary.

B. Exfiltration: The CONTRACTOR shall conduct an exfiltration test on each reach of sewer between manholes to include all services and will be used for pipeline acceptance.

Exfiltration tests shall be conducted by blocking off all manhole openings except those connecting with the reach being tested, filling the line, and measuring the water required to maintain a constant level in the manholes. During the exfiltration test, the minimum water depth above the pipe invert shall be 2 feet.

The total exfiltration shall not exceed 100 gallons per inch of nominal diameter per mile of pipe per day for each reach tested. For purposes of determining maximum allowable leakage, manholes shall be considered sections of 48-inch pipe. The exfiltration tests shall be maintained on each reach for at least 2 hours or longer as necessary, in the opinion of the ENGINEER, to locate all leaks. In addition, any visible leaks or physical defects shall be repaired.

The CONTRACTOR shall provide, at his own expense, all necessary piping between the reach to be tested and the source of water supply, together with equipment and materials required for the tests. The methods used and the time of conducting exfiltration tests shall be acceptable to the ENGINEER.

If the leakage in any reach exceeds the allowable maximum it shall be re-tested after the leaks are repaired.

1. Low Pressure Air Test Alternative:
   a. As an alternative to the exfiltration test above, a low pressure air test may be used, if the CONTRACTOR’s proposed procedures are approved by the ENGINEER. The test methods and evaluation of results shall comply fully with the latest edition of UNI-B-6-98, by Uni-Bell PVC Pipe Association of Dallas, TX and ASTM F1417. Equipment required includes: two air-tight plugs, braces for plugs, compressor, air supply hose, throttling valve on air supply line, air bleed valve, high pressure shut-off valve on compressor, pressure gauge with isolation cock.

2. Infiltration: If at any time prior to expiration of the one-year correction period, infiltration exceeds 100 gallons per inch of nominal diameter per mile of sewer per day, the

CONTRACTOR shall locate the leaks and make repairs as necessary to control the infiltration.

3. Alignment and grade: All sections of the sewer are to be within ¾-inch of specified horizontal alignment and ¼-inch of the specified vertical grade. A lamp test shall be performed to verify alignment between manholes.

4. Vacuum testing of manholes: See Section 0330513 – Manholes and structures. The CONTRACTOR shall conduct a vacuum test on each manhole, or conduct a leakage test in conjunction with the test on the sewer. Test shall be conducted in accordance with ASTM C1244. It is recommended the vacuum test be completed prior to backfilling around the manhole.

5. Deflection: The ENGINEER reserves the right to require deflection testing on any portion of PVC sewer pipe that the ENGINEER deems is necessary to assure the quality of the pipe installation. Soil conditions encountered during installation and the CONTRACTOR's general workmanship will be factors used to judge if deflection testing will be required.

   A deflection test shall be conducted by pulling an approved solid pointed mandrel (Go-No Go device) through the installed sewer pipe. The diameter of the mandrel shall be 95 percent of the pipe diameter. Deflection testing shall be conducted on a manhole-to-manhole basis. Failure to pass the mandrel through a reach of sewer pipe shall constitute a failure of the test and will require the CONTRACTOR, at his expense, to locate and repair the portion of sewer pipe that has failed. Once repaired, that portion of pipe shall be deflection tested again.

3.6 DISINFECTING PIPELINES (Potable Water)

A. General: Potable water pipelines except those appurtenant to hydraulic structures shall be disinfected in accordance with the requirements of ANSI/AWWA C651 - Disinfecting Water Mains, using the Continuous-Feed Method as modified herein. Disinfection of the pipeline shall not be completed concurrently with the hydrostatic leak test. All heavy chlorinated water shall be flushed prior to pressurizing the new main.

B. Flushing: Prior to chlorination, all water mains shall be flushed to remove material within the pipe. The flushing velocity within the pipeline shall be a minimum of 2.5 feet per second.

C. Chlorination: A chlorine-water mixture shall be uniformly introduced into the pipeline by means of a solution-feed chlorinating device. The chlorine solution shall be introduced at one end of the pipeline through a tap in such a manner that as the pipeline is filled with water, the dosage applied to the water entering the pipe shall be approximately 50 mg/L. Care shall be taken to prevent the strong chlorine solution in the line being disinfected from flowing back into the line supplying the water.

D. Retention Period: Chlorinated water shall be retained in the pipeline for at least 24 hours. After the chlorine-treated water has been retained for the required time, the free chlorine residual at the pipeline extremities and at other representative points shall be at least 25 mg/L. If testing does not demonstrate a residual of 25 mg/L or greater, the disinfection procedure above shall be repeated.

E. Chlorinating Valves: During the process of chlorinating the pipelines, valves and other appurtenances shall be operated from closed to full open to closed while the pipeline is filled with the heavily-chlorinated water.

F. Sampling Ports: The CONTRACTOR shall provide sampling ports along the pipeline as defined on AWWA C651. Taps may be made at manways and air valves to help facilitate the spacing requirement.

G. Final Flushing: After the applicable retention period, the heavily chlorinated water shall be flushed from the pipeline until chlorine measurements show that the concentration in the water leaving the pipeline is no higher than that generally prevailing in the system or is acceptable for domestic use. Any release of chlorinated water shall comply with federal, state, and local regulation and the permits for the project. Chlorine in excessive amounts shall be treated before discharge.

H. Bacteriological Testing: After final flushing and before the pipeline is placed in service, a sample, or samples shall be collected from the end of the line and shall be tested for bacteriological quality in accordance with the requirements of the State Department of Environmental Quality or other appropriate regulatory agency. For this purpose the pipe shall be re-filled with fresh potable water and left for a period of 24 hours before any sample is collected. If testing does not demonstrate a free chlorine residual after the 24-hour period, the disinfection procedure above shall be repeated. If the initial disinfection treatment fails to produce satisfactory bacteriological test results, the disinfection procedure shall be repeated until acceptable results are obtained.

3.7 CONNECTIONS TO EXISTING SYSTEM

A. Where connections are to be made to an existing potable water system, the interior surfaces of all pipe and fittings used in making the connections shall be swabbed or sprayed with a five (5) percent hypochlorite solution before installation. Thorough flushing shall be started as soon as the connection is completed and shall be continued until discolored water is eliminated.

3.8 BURIED PIPE TESTING SCHEDULE

A. The schedules listed below, following the "End of Section" designation, are a part of this Specification section.
   1. Table 017430A, Buried Piping Testing Schedule

3.9 INSTALLATION

A. Provide required equipment to perform Work of this Section.

B. Introduce treatment into piping system.

C. Maintain disinfectant in system for a minimum of 10 hours.

D. Flush, circulate, and clean until required disinfectant quality standard has been achieved using potable quality water from the municipal water supply.

E. Replace permanent system devices that were removed for disinfection.

3.10 FIELD QUALITY CONTROL

A. Disinfection, Flushing, and Sampling:
   1. Disinfect pipeline installation according to AWWA C651 and piping inside the treatment plant according to AWWA C653.
   2. Upon completion of retention period required for disinfection, flush pipeline until chlorine concentration in water leaving pipeline is no higher than that generally prevailing in existing system or is acceptable for domestic use.
   3. Disposal:
      a. Legally dispose of chlorinated water.
      b. Apply neutralizing chemical to chlorinated water as it exits the system during flushing to neutralize chlorine residual remaining in water discharged to ground.

   4. After final flushing and before pipeline is connected to existing system or placed in service, certify that disinfectant level meets quality standards of Alaska Department of Environmental Quality.

3.11 DISINFECTION OF WATER STORAGE FACILITY

A. General: All new water storage facilities and existing storage facilities taken out of service for inspecting, repairing, painting, cleaning, or other activity that might lead to contamination of water shall be disinfected before they are returned to service. The water storage facilities shall be disinfected in accordance with the latest edition of "AWWA Standards for Disinfection of Water - Storage Facilities", AWWA C652.

B. Cleaning: All scaffolding, planks, tools, rags, and any other material not part of the structural or operating facilities of the tank shall be removed. Then the surfaces of the walls, floor, and operating facilities of the storage facility shall be cleaned thoroughly using a high-pressure water jet, sweeping, scrubbing, or equally effective means. All water, dirt, and foreign material accumulated in this cleaning operation shall be discharged from the storage facility or otherwise removed.

C. Following the cleaning operation, the vent screen, overflow screen, and any other screened openings shall be checked and put in satisfactory condition to prevent birds, insects, and other possible contaminants from entering the facility. Any material to be in the storage facility that is not able to be cleaned beforehand shall be placed in the storage facility in a clean and neat manner to minimize the introduction of dirt or other foreign material.

D. Chlorination:
   1. Forms of Chlorine: The forms of chlorine that may be used in disinfecting operations are liquid chlorine & sodium hypochlorite solution. The material shall be stored and handled in accordance with the manufacturer's recommendations.
   2. Alternative Methods of Chlorination: Three methods of chlorination are explained in this standard. Typically, only one method will be used for a given storage facility disinfection, but combinations of the methods may be used. The three methods are (1) chlorination of the full storage facility such that at the end of the appropriate retention period the water will have a free chlorine residual of not less than 10 mg/L, (2) spraying or painting of all storage facility water contact surfaces with a solution of 200 mg/L available chlorine, (3) chlorination of full storage facility with water having a free chlorine residual of 2 mg/L after 24 h.
      a. Chlorination Method 1: The water storage facility shall be filled to the overflow level with potable water to which enough chlorine is added to provide a free chlorine residual in the full facility of not less than 10 mg/L at the end of the appropriate 6 h or 24 h period, as de

scribed in Sec. 2.1.3. The chlorine, either as sodium hypochlorite or liquid chlorine, shall be introduced into the water as described hereafter.

i. Liquid Chlorine Use. Liquid chlorine shall be introduced into the water filling the storage facility in such a way as to give a uniform chlorine concentration during the entire filling operation. Portable chlorination equipment shall be carefully operated and shall include a liquid chlorine cylinder, gas flow chlorinator, chlorine ejector, safety equipment, and an appropriate solution tube to inject the high concentration chlorine solution into the filling water. The solution tube shall be inserted through an appropriate valve located on the inlet pipe and near the storage facility such that the chlorine solution will mix readily with the inflowing water.

ii. Sodium Hypochlorite Use. Sodium hypochlorite shall be added to the water entering the storage facility by means of a chemical feed pump, or shall be applied by hand pouring into the storage facility and allowing the inflowing water to provide the desired mixing.

a) When a chemical feed pump is used, the concentrated chlorine solution shall be pumped through an appropriate solution tube so as to inject the high concentration chlorine solution at a rate that will give a uniform chlorine concentration in the filling water. The solution tube shall be inserted through an appropriate valve located on the inlet pipe and near the storage facility, or through an appropriate valve located on the storage facility such that the chlorine solution will mix readily with the filling water.

b) When the sodium hypochlorite is poured into the storage facility, the filling of the storage facility shall begin immediately thereafter or as soon as any removed manhole covers can be closed. The sodium hypochlorite may be poured through the cleanout or inspection manhole in the lower course or level of the storage facility, or in the riser pipe of an elevated tank, or through the roof manhole. The sodium hypochlorite shall be poured into water in the storage facility when such water is not more than 3 ft. in depth, nor less than 1 ft. in depth or as close thereto as manhole locations permit.

iii. Retention Period. After the storage facility has been filled with the disinfecting water, it shall stand full as follows: (1) for a period of not less than 6 h when the water entering the storage facility has been chlorinated uniformly by gas feed equipment or chemical pump, (2) for a period of not less than 24 h when the storage facility has been filled with water that has been mixed with sodium hypochlorite within the storage facility as described above.

b. Chlorination Method 2

i. A solution of 200 mg/L available chlorine shall be applied directly to the surfaces of all parts of the storage facility that would be in contact with water when the storage facility is full to the overflow elevation.

ii. Method of Application. The chlorine solution may be applied with suitable brushes or spray equipment. The solution shall thoroughly coat all surfaces to be treated, including the inlet and outlet piping, and shall be applied to any separate drain piping such

that it will have available chlorine of not less than 10 mg/L when filled with water. Overflow piping need not be disinfected.

iii. Retention. The disinfected surfaces shall remain in contact with the strong chlorine solution for at least 30 min., after which potable water shall be admitted, the drain piping shall be purged of the 10 mg/L chlorinated water, and the storage facility shall then be filled to its overflow level. Following this procedure, and subject to satisfactory bacteriological testing and acceptable aesthetic quality, such water may be delivered to the distribution system.

E. Handling of Disinfection Water

1. After the retention period specified, the total chlorine residual in the storage facility shall be reduced to a concentration appropriate for distribution (not more than 3 mg/L) by completely draining the storage facility and refilling with potable water, or by a combination of additional holding time and blending with potable water having a low chlorine concentration. When an appropriate chlorine concentration is reached, and subject to satisfactory bacteriological testing and acceptable aesthetic quality, such water may be delivered to the distribution system.
2. The environment to which the chlorinated water is to be discharged shall be inspected, and if there is any question whether the chlorinated discharge will cause damage, then a reducing agent shall be applied to the water to be wasted to thoroughly neutralize the chlorine residual in the water. Federal or tribal environmental regulations may require special provisions or permits prior to disposal of highly chlorinated water. The proper authorities should be contacted prior to disposal of highly chlorinated water.

F. Bacteriological Sampling and Testing

1. After the chlorination procedure is completed, and before the storage facility or the piping are placed in service, water from the full facility shall be sampled and tested for coliform organisms in accordance with the latest edition of Standard Methods for the Examination of Water and Wastewater. The testing method used shall be either the multiple-tube fermentation technique or the membrane-filter technique.
    a. Test for Odor. The water in the full facility should also be tested to assure that no offensive odor exists due to chlorine reactions or excess chlorine residual.
    b. Results of Testing. If the test for coliform organisms is negative then the storage facility may be placed in service. If the test shows the presence of coliform or other bacteria, the situation shall be evaluated by the ENGINEER. The CONTRACTOR shall provide additional disinfection and flushing as needed. In any event, repeat samples shall be taken until two consecutive are negative, or the storage facility shall again be subjected to disinfection and retesting until satisfactory tests are obtained.
    c. Care in Sampling. The samples shall be taken from a sample tap on the outlet piping from the storage facility or from a sample tap connected directly to the storage facility. In either case, the operation shall be such as to ensure that the sample collected is actually from water that has been in the storage facility.
    d. Recommended Additional Samples. During the disinfection operation and the required sampling of water from the storage facility, it is recommended that samples be taken from water inflowing to the storage facility to determine if coliforms are present in the typical potable water source.

END OF SECTION

SECTION 33 01 11 – DISINFECTION OF WATER STORAGE AND EQUIPMENT

PART 1 -- GENERAL

1.1 SCOPE

A. The Contractor shall be responsible for all labor, materials and equipment necessary for the disinfection and testing of any equipment intended to hold filtered water. This includes all water from the multimedia filter outlet through final potable water storage tanks, which includes the contact basins, clearwell, high lift pump station, and final potable water storage (as required).

1.2 STANDARD SPECIFICATIONS

A. All work on the contact basin and clearwell shall fully conform to the requirements of the latest published editions of the following Standard Specifications:

1. AWWA C652 - Standard for Disinfection of Water Storage Facilities.

2. NSF (National Sanitation Foundation) 61 - Materials in contact with Potable Water.

3. ACI 318 - Building Code Requirements for Reinforced Concrete

4. ACI 301 –Specifications for Structural Concrete

PART 2 -- PRODUCTS

None

PART 3 -- EXECUTION

3.1 DISINFECTION OF WATER STORAGE FACILITY

A. General: All new water storage facilities and existing storage facilities taken out of service for inspecting, repairing, painting, cleaning, or other activity that might lead to contamination of water shall be disinfected before they are returned to service. The water storage facilities shall be disinfected in accordance with the latest edition of "AWWA Standards for Disinfection of Water - Storage Facilities", AWWA C652.

B. Cleaning: All scaffolding, planks, tools, rags, and any other material not part of the structural or operating facilities of the tank shall be removed. Then the surfaces of the walls, floor, and operating facilities of the storage facility shall be cleaned thoroughly using a high-pressure water jet, sweeping, scrubbing, or equally effective means. All water, dirt, and foreign material accumulated in this cleaning operation shall be discharged from the storage facility or otherwise removed.

C. Following the cleaning operation, the vent screen, overflow screen, and any other screened openings shall be checked and put in satisfactory condition to prevent birds, insects, and other possible contaminants from entering the facility. Any material to be in the storage facility that is not able to be cleaned beforehand shall be placed in the storage facility in a clean and neat manner to minimize the introduction of dirt or other foreign material.

D. Chlorination:

1. Forms of Chlorine: The forms of chlorine that may be used in disinfecting operations are liquid chlorine & sodium hypochlorite solution. The material shall be stored and handled in accordance with the manufacturer's recommendations.

2. Alternative Methods of Chlorination: Three methods of chlorination are explained in this standard. Typically, only one method will be used for a given storage facility disinfection, but combinations of the methods may be used. The three methods are (1) chlorination of the full storage facility such that at the end of the appropriate retention period the water will have a free chlorine residual of not less than 10 mg/L, (2) spraying or painting of all storage facility water contact surfaces with a solution of 200 mg/L available chlorine, (3) chlorination of full storage facility with water having a free chlorine residual of 2 mg/L after 24 h.

   a. Chlorination Method 1: The water storage facility shall be filled to the overflow level with potable water to which enough chlorine is added to provide a free chlorine residual in the full facility of not less than 10 mg/L at the end of the appropriate 6 h or 24 h period, as described in Sec. 2.1.3. The chlorine, either as sodium hypochlorite or liquid chlorine, shall be introduced into the water as described hereafter.

      i. Liquid Chlorine Use. Liquid chlorine shall be introduced into the water filling the storage facility in such a way as to give a uniform chlorine concentration during the entire filling operation. Portable chlorination equipment shall be carefully operated and shall include a liquid chlorine cylinder, gas flow chlorinator, chlorine ejector, safety equipment, and an appropriate solution tube to inject the high concentration chlorine solution into the filling water. The solution tube shall be inserted through an appropriate valve located on the inlet pipe and near the storage facility such that the chlorine solution will mix readily with the inflowing water.

      ii. Sodium Hypochlorite Use. Sodium hypochlorite shall be added to the water entering the storage facility by means of a chemical feed pump, or shall be applied by hand pouring into the storage facility and allowing the inflowing water to provide the desired mixing.

         1) When a chemical feed pump is used, the concentrated chlorine solution shall be pumped through an appropriate solution tube so as to inject the high concentration chlorine solution at a rate that will give a uniform chlorine concentration in the filling water. The solution tube shall be inserted through an appropriate valve located on the inlet pipe and near the storage facility, or through an appropriate valve located on the storage facility such that the chlorine solution will mix readily with the filling water.

         2) When the sodium hypochlorite is poured into the storage facility, the filling of the storage facility shall begin immediately thereafter or as soon as any removed manhole covers can be closed. The sodium hypochlorite may be poured through the cleanout or inspection manhole in the lower course or level of the storage facility, or in the riser pipe of an elevated tank, or through the roof manhole. The sodium hypochlorite shall be poured into water in the storage facility when such water is not more than 3 ft. in depth, nor less than 1 ft. in depth or as close thereto as manhole locations permit.

iii. Retention Period. After the storage facility has been filled with the disinfecting water, it shall stand full as follows: (1) for a period of not less than 6 h when the water entering the storage facility has been chlorinated uniformly by gas feed equipment or chemical pump, (2) for a period of not less than 24 h when the storage facility has been filled with water that has been mixed with sodium hypochlorite within the storage facility as described above.

b. Chlorination Method 2

i. A solution of 200 mg/L available chlorine shall be applied directly to the surfaces of all parts of the storage facility that would be in contact with water when the storage facility is full to the overflow elevation.

ii. Method of Application. The chlorine solution may be applied with suitable brushes or spray equipment. The solution shall thoroughly coat all surfaces to be treated, including the inlet and outlet piping, and shall be applied to any separate drain piping such that it will have available chlorine of not less than 10 mg/L when filled with water. Overflow piping need not be disinfected.

iii. Retention. The disinfected surfaces shall remain in contact with the strong chlorine solution for at least 30 min., after which potable water shall be admitted, the drain piping shall be purged of the 10 mg/L chlorinated water, and the storage facility shall then be filled to its overflow level. Following this procedure, and subject to satisfactory bacteriological testing and acceptable aesthetic quality, such water may be delivered to the distribution system.

E. Handling of Disinfection Water

1. After the retention period specified, the total chlorine residual in the storage facility shall be reduced to a concentration appropriate for distribution (not more than 3 mg/L) by completely draining the storage facility and refilling with potable water, or by a combination of additional holding time and blending with potable water having a low chlorine concentration. When an appropriate chlorine concentration is reached, and subject to satisfactory bacteriological testing and acceptable aesthetic quality, such water may be delivered to the distribution system.
2. The environment to which the chlorinated water is to be discharged shall be inspected, and if there is any question whether the chlorinated discharge will cause damage, then a reducing agent shall be applied to the water to be wasted to thoroughly neutralize the chlorine residual in the water. Federal or tribal environmental regulations may require special provisions or permits prior to disposal of highly chlorinated water. The proper authorities should be contacted prior to disposal of highly chlorinated water.

F. Bacteriological Sampling and Testing

1. After the chlorination procedure is completed, and before the storage facility or the piping are placed in service, water from the full facility shall be sampled and tested for coliform organisms in accordance with the latest edition of Standard Methods for the Examination of Water and Wastewater. The testing method used shall be either the multiple-tube fermentation technique or the membrane-filter technique.

a. Test for Odor. The water in the full facility should also be tested to assure that no offensive odor exists due to chlorine reactions or excess chlorine residual.

b. Results of Testing. If the test for coliform organisms is negative then the storage facility may be placed in service. If the test shows the presence of coliform or other bacteria, the situation shall be evaluated by the ENGINEER. The CONTRACTOR shall provide additional disinfection and flushing as needed. In any event, repeat samples shall be taken until two consecutive are negative, or the storage facility shall again be subjected to disinfection and retesting until satisfactory tests are obtained.

c. Care in Sampling. The samples shall be taken from a sample tap on the outlet piping from the storage facility or from a sample tap connected directly to the storage facility. In either case, the operation shall be such as to ensure that the sample collected is actually from water that has been in the storage facility.

d. Recommended Additional Samples. During the disinfection operation and the required sampling of water from the storage facility, it is recommended that samples be taken from water inflowing to the storage facility to determine if coliforms are present in the typical potable water source.

END OF SECTION

SECTION 33 05 05.31 - PRESSURE TESTING

PART 1 - GENERAL

1.1 SUMMARY

A. Section Includes: Hydrostatic testing of pressure piping.

1.2 REFERENCE STANDARDS

A. AWWA C605-21 – Underground Installation of PVC Pressure Pipe and Fittings

B. AWWA C906-21 – Polyethylene Pressure Pipe and Fittings, 4 inch through 65 inch

C. AWWA C906-90 – Polyethylene Pressure Pipe and Fittings, 4 inch

D. AWWA C906-08 – Polyethylene Pressure Pipe and Tubing, ½ inch through 3 inch

E. AWWA C600-17 – Installation of Ductile Iron Mains and their Appurtenances

F. ASME B31.3 – Process Piping (for air pressure testing requirements)

G. Plastic Pipe Institute:
   1. Handbook of PE Pipe
   2. PEX Design Guide
   3. PEX Pipe Design Manual for Water, Oil, Gas, and Industrial Applications
   4. Polyethylene Piping Systems Field Manual for Municipal Water Appplications

1.3 SUBMITTALS

A. Submit following items prior to start of testing:
   1. Testing procedures.
   2. List of test equipment.
   3. Testing sequence schedule.
   4. Provisions for disposal of flushing and test water.
   5. Certification of test gage calibration.

B. Test and Evaluation Reports: Provide a final testing report to demonstrate results of piping pressure tests for all pipe segments, including gravity flow pipe segments.

C. Qualifications Statement: Contractors' Construction Manager or Site Supervisor shall be qualified to provide pipeline testing having completed a minimum of 5 projects of similar size and complexity to the current project.

1.4 QUALITY ASSURANCE

A. Perform Work according to standards and/or guidelines listed in the Reference Standards section of this document.

B. All piping shall be pressure tested at 1.5 x Operating Pressure or a minimum of 65 psig for atmospheric or gravity flow pipelines. Reference project piping line list for operating pressures.

C. Piping containing water shall be tested with potable water.

D. Piping used in air service may be pressure tested with air.

PART 2 - PRODUCTS

2.1 HYDROSTATIC TESTING

A. Equipment:
   1. Pressure pump.
   2. Pressure hose.
   3. Water meter.
   4. Test connections.
   5. Pressure relief valve.
   6. Pressure Gage: Calibrated to 0.1 psi.

PART 3 - EXECUTION

3.1 EXAMINATION

A. Verify that piping is ready for testing.

B. Verify that trenches are backfilled to a minimum of ½ pipe diameter.

C. Verify that pressure piping thrust restraints have been installed.

3.2 FIELD QUALITY CONTROL

A. Testing of Pressure Piping:
   1. Test system according to AWWA C600 and following:
      a. Hydrostatically test each portion of pressure piping, including valved sections, but excluding vendor equipment.
      b. Conduct hydrostatic testing for at least two hours.
      c. Slowly fill with water portion of piping to be tested, expelling air from piping at high points.
      d. Install corporation cocks at high points for buried piping and air release valves inside the building as shown on the drawings.
      e. Close air vents and corporation cocks after air is expelled.
      f. Raise pressure to specified test pressure.
      g. Observe joints, fittings, and valves undergoing testing.
      h. Remove and renew cracked pipes, joints, fittings, and valves that show visible leakage.
      i. Retest.
      j. Correct visible deficiencies and continue testing at same test pressure for additional two hours to determine leakage rate.
      k. Maintain pressure within plus or minus 5.0 psi of test pressure.
      l. Leakage is defined as quantity of water supplied to piping necessary to maintain test pressure during period of testing.
      m. Compute maximum allowable leakage using following formula:
         1) L = testing allowance (gph) = [SD x sqrt(P)]/C.
         2) S = length of pipe tested, feet.
         3) D = nominal diameter of pipe, inches.
         4) P = average test pressure during hydrostatic testing, psig.
         5) C = 148,000.
         6) If pipe undergoing testing contains sections of various diameters, calculate allowable leakage from sum of computed leakage for each pipe size.
   2. If testing of piping indicates leakage greater than that allowed, locate source of leakage, make corrections, and retest until leakage is within acceptable limits.
   3. Correct visible leaks regardless of quantity of leakage.

B. Test Pressures by Piping Service

1. The following test pressure table provides information required to calculate the maximum available leakage:

Service	Fluid	Operating Pressure Range	Test Pressure
Raw Water	Water	0 – 45 psig	65 psig
Clarified Water	Water	0 – 6 psig	65 psig
Filtered Water	Water	0 – 6 psig	65 psig
Air Scour	Air	0 -10 psig	65 psig
DAF Air	Air	0 -175 psig	195 psig
Chlorinated Water	Water	0 – 60 psig	90 psig
Chemical Injection	Varies	0 – 60 psig	90 psig

END OF SECTION

SECTION 33 05 13 – MANHOLES AND STRUCTURES

PART 1 - GENERAL

1.1 RELATED DOCUMENTS

A. Drawings and general provisions of the Contract, including General and Supplementary Conditions and Division 01 Specification Sections, apply to this Section.

1.2 SUMMARY

A. Section Includes:
   1. Manholes
   2. Manhole frames and covers
   3. Vaults
   4. Hatches
   5. Ladders
   6. Pipe gaskets
   7. Accessories

1.3 ACTION SUBMITTALS

A. Furnish submittals in accordance with Section 01 33 00 – Submittals.

1.4 INFORMATIONAL SUBMITTALS

A. Coordination Drawings: Show pipe sizes, locations, and elevations. Indicate interface and spatial relationship between manholes, piping, and proximate structures.

B. Product Certificates: For each type of cast-iron soil pipe and fitting, from manufacturer.

C. Field quality-control reports.

1.5 DELIVERY, STORAGE, AND HANDLING

A. The CONTRACTOR shall be responsible for all such material furnished by him and shall replace, at his own expense, all such material found defective in manufacture or damaged in handling after delivery by the manufacturer. This shall include the furnishing of all materials and labor required for the replacement of installed material discovered defective prior to the final acceptance of the Work or during the guarantee period.

B. The CONTRACTOR shall be responsible for the safe storage of material furnished by him or to him and accepted by him and intended for the Work, until it has been incorporated in the completed project. The interior of all pipe and other accessories shall be kept free from dirt and foreign matter at all times.

C. Handle manholes and structures according to manufacturer's written rigging instructions.

PART 2 - PRODUCTS

2.1 MANHOLES:

A. Manholes shall be constructed of precast reinforced concrete using Type I-IISR cement. Reinforced concrete manhole sections shall conform to the requirements of Standard Specifications for Precast Reinforced Concrete Manhole Sections, ASTM C478M-93 with section 16 rejection requirements.

B. The bottom section of sewer manholes shall be cast with circular openings or horseshoe shaped blockouts, if allowed by the plans, to accommodate the particular size or type of pipe or angle of turn in the line, as required. The bottom of manholes are to be poured monolithic with the bottom wall section unless otherwise approved.

C. The upper section of the manhole shall be either a cone section or straight section, as shown on the drawings. Cone sections shall be 2 feet tall.

D. Manhole Channels and Benches: Factory or field formed from concrete. Portland cement design mix, 4000 psi minimum, with 0.45 maximum water/cementitious materials ratio. Include channels and benches in manholes.
   1. Channels: Concrete invert, formed to same width as connected piping, with height of vertical sides to three-fourths of pipe diameter. Form curved channels with smooth, uniform radius and slope.
      a. Invert Slope: 2 percent through manhole.
   2. Benches: Concrete, sloped to drain into channel.
      a. Slope: 4 percent.

E. Joints between precast manhole wall sections shall be made with a premolded plastic filler such as Rubber Nek, as furnished by K.T. Snyder Company of Houston, Texas or an approved equal. Tylox Type A rubber pipe gaskets as manufactured by Hamilton Ken Mfg. Co., Kent, Ohio or 0 ring gaskets which will meet the requirements of ASTM C443 will be accepted as equal to Rubber Nek plastic joint filler. Jointing shall be in strict accordance with the plastic filler or gasket manufacturer's recommendations.

F. The manhole shall be substantially free of fractures and surface roughness. The planes of the ends of the manhole sections shall be perpendicular to their longitudinal axis, within the limits as specified in ASTM C478.

G. If necessary, manhole sections may be repaired if in the opinion of the ENGINEER the repairs are sound and properly finished and cured and the repaired manhole sections conform to the requirements of the specifications.

H. Manhole inverts shall allow a smooth flow of water through the manhole, and not allow an accumulation of solids. If a precast invert is used, it must slope through the manhole and provide for a smooth transition of flow from the inlet pipe, through the manhole and back into the outlet pipe.

I. Drop manholes shall be provided when shown on the drawings, per the details in the drawings.

2.2 MANHOLE GRADE RINGS

A. Precast concrete grade rings, set in full cement mortar bed, shall be used for adjustment of the frame and cover to finish grade. The grade rings shall meet the requirements of ASTM C478.
   1. Adjusting Rings (under 3”): Interlocking HDPE rings with level or sloped edge in thickness and diameter matching manhole frame and cover, and of height required to adjust manhole frame and cover to indicated elevation and slope. Include sealant recommended by ring manufacturer.
   2. Mortar used to grout concrete grade rings shall be (1) Portland Cement, ASTM C150, Type 1; (2) Hydrated Lime, ASTM C207, Type S; (3) Concrete sand (fine aggregate) which has been sieved through an 8 mesh screen; (4) Volumetric proportions, 1 part Portland cement, 1/2 part hydrated lime, 3 parts sand; (5) Cement, lime and sand shall be thoroughly mixed dry and only enough water added to form a mortar of the proper

consistency. All mortar shall be used within 40 minutes after mixing. Mortar which has begun to take on initial set shall be discarded and shall not be mixed with additional cement or new mortar.

2.3 MANHOLE STEPS:

A. Where provided, manhole steps are to be cast or drilled and mortared into the walls of the manhole, and designed to withstand a minimum concentrated live load of 300 lb. The live load shall be considered to be concentrated at such points as to cause the maximum stress in the structural member being considered. The steps shall have a minimum cross section of ¾-inch. The steps shall be imbedded into the manhole wall a minimum of 3 inches. The materials used in the steps shall be ½-inch Grade 60 steel with a polypropylene plastic coating, complying with ASTM C478. The step shall be free of splinters, sharp edges, burrs, or projections which may be a hazard to persons using the steps for access into or out of the manhole. Minimum width of rungs shall be 12 inches. The rung shall also project a minimum of 5¾ inches from the wall, measured at the point of embedment. Steps in the manhole sections shall be aligned so as to form a continuous ladder with rungs equally spaced vertically in the assembled manhole at a maximum distance of 12 inches apart. The manhole steps shall comply with ANSI 14.3.

2.4 MANHOLE FRAMES AND COVERS:

A. All cast iron manhole frames and lids shall be made of tough gray pig iron conforming to the requirements of ASTM A48 Class 35 and shall be free from cracks, swells, holes and cold shuts, and shall have a smooth finish. Castings shall conform in all dimensions to the details shown on the plans. Before leaving the foundry, all casting shall be thoroughly cleaned and subjected to a hammer test

B. Sanitary Sewers: Frame and cover shall be EJ Iron 3772, D&L Foundry A-1178, or approved equal, with the words "SANITARY SEWER" cast on the cover and two pickholes. The cover shall be 24 inches with a 22-inch opening (min.). It shall be rated for HS-20 loading. Existing sanitary sewer manhole covers and frames will not be allowed to be used as replacement lids in areas where existing manholes are to be removed unless allowed by the Contract Drawings.

C. Sanitary Sewer – Water Tight: Frame and cover shall be EJ Iron 1040, or approved equal, with the words "SANITARY SEWER" cast on the cover and two closed pickholes. The lid and frame shall have a neoprene gasket. The cover shall be have a 30-inch opening (min.) and rated for HS-20 loading. Existing sanitary sewer manhole covers and frames will not be allowed to be used as replacement lids in areas where existing manholes are to be removed unless allowed by the Contract Drawings

D. Pullbox Manhole: Frame and cover shall be EJ Iron 1044, or approved equal. The cover shall be 24 inches with a 22-inch opening (min.). It shall be rated for HS-20 loading.

E. Grates: Where indicated on the construction drawing, slotted drain cover shall be installed. The slotted covers and frames shall be EJ Iron v-53241-1 or approved equal.

2.5 VAULTS & STRUCTURES

A. Concrete vaults shall be constructed of precast reinforced concrete using Type III cement. Straight manholes or vaults with slab cover shall be used where indicated, and precast cover shall be rated for H-20 loading. Reinforced concrete manhole sections shall conform to the

requirements of Standard Specifications for Precast Reinforced Concrete Manhole Sections, ASTM C478.

B. Structural design for precast manholes and vaults shall be submitted by an Alaska registered Professional Engineer.

C. If necessary, the structure sections may be repaired if in the opinion of the ENGINEER the repairs are sound and properly finished and cured and the repaired structure sections conform to the requirements of the specifications.

D. Vault configurations shall be as shown on the Plans. Vault shall be designed to resist hydrostatic uplift (buoyancy). The bases shall be constructed as shown on the details. All joints shall be watertight.

E. Damp proofing: As scheduled below exterior damp proofing shall be Tex-Mastic No. 670-N, emulsion, non-fibrated asphalt or approved equivalent. Conformance: MIL-R-3472.
   1. Structures to received damp proofing:
      a. Sewer manholes
      b. Backwash flow control vault

2.6 ACCESS HATCHES

A. Vault (Dry Vaults) Access Hatches: The vault access hatches shall have a 1/4" (7mm) thick one-piece, mill finish, extruded aluminum channel frame, incorporating a continuous concrete anchor. A 1 1/2" (38mm) drainage coupling shall be located in the front left corner of the channel frame. Door panel shall be 1/4" (7mm) aluminum diamond plate, reinforced to withstand a live load of 300 lbs. psf (1464 kg. psm). Uniform live load with a maximum allowable deflection of 1/150 of the span. Door shall open to 90 degrees and automatically lock with a T-316 stainless steel hold open arm with an aluminum release handle. Door shall close flush with the frame. Hinges and all fastening hardware shall be T-316 stainless steel. Hatch shall provide for fall-through protection in accordance with O.S.H.A 1910.23 and confined space entry control in accordance with O.S.H.A. 1910.146. The frame assembly shall be either coated steel or aluminum, with 300 series stainless steel hinges and hardware. Unit shall lock with a non-corrosive locking bar and have a non-corrosive handle. All hatches shall have the ability to be locked. Hatches shall be manufactured by Flygt, Halliday, or equal.

2.7 PIPE GASKET

A. A flexible, watertight seal is to be used between the sanitary sewer pipe and the concrete manhole, vault, or structure, where the pipe passes through the concrete wall. The pipe connection shall be a compression-type flexible connector cast into the structure wall as manufactured by Z-Lok Products, Inc, or a boot-type flexible connector with metal expansion ring and a metal take-up clamp as manufactured by Press Seal Gasket Corporation, or approved equals. Connectors shall allow for minimal differential settlement and be watertight.

2.8 SUMPS

A. Sumps shall be incorporated into the structure as shown on the plans. The sump shall be watertight, and the base section shall be sloped to the sump as shown in the Drawings.

PART 3 - EXECUTION

3.1 MANHOLE INSTALLATION:

A. Manholes shall be constructed to the general dimensions shown on the Drawings. Base gravel is to be placed as shown on the Drawings. Manhole inverts shall be within 0.04 feet of their true elevation.

B. At the horseshoe shaped blockouts where the water pipe protrudes through the manhole wall, Rubber-Nek, or approved equal, is to be placed around the pipe to prevent the manhole from resting on the pipe.

C. The manhole frame shall be adjusted to finished grade through the use of precast concrete grade rings. The rings shall be sealed with Rubber-Nek and grouted on the outside to the top of the conical manhole section. The manhole frame shall also be grouted in place. The process of simply setting the concrete grade rings in place and setting the cast iron ring on top of the grade rings without using any grout will not be allowed. No wood material subject to deterioration shall be used to adjust manhole frames to finished grade. No more than 8 inches of spacer rings shall be permitted. If a greater adjustment is needed, the upper section shall be removed and the adjustment made through the use of intermediate manhole sections.

D. Invert channels of sanitary sewer manholes shall be very smooth and semi-circular in shape conforming to the inside of the adjacent sewer sections. Where side branches or change in direction, grade, or diameter occur in the manhole, manufacturer's pipe fittings or carefully mitered sections of straight pipe may be used. Hand-formed invert shall not be allowed. Construction by laying the pipe through the manhole with glue-type fittings, and cutting top half of pipe out may be allowed by the ENGINEER. Only smooth sawcuts will be accepted, breaking pipe will not be allowed. After final finishing of the surface, the manhole floor shall be smooth and shall slope uniformly toward the invert channel at not less than 1 inch per foot nor more than 2 inches per foot.

E. At the circular opening through the manhole wall, the PSX Gasket, or approved equal, is to be installed for a watertight connection on sanitary sewers, or elsewhere if required. All sanitary sewer connections between manhole sections are to be watertight. Storm sewer connections between manhole and pipe shall be a grouted smooth and watertight from both the inside and outside.

3.2 Vault/Structure Installation

A. Wet wells and vaults shall be installed to the dimensions and locations as shown on the Drawings. Coordination between the pump manufacture and precaster will be necessary. All joints between sections, sections and base, sections and top, and penetrations shall be sealed watertight. Exposed joints on the interior shall be grouted to provide a smooth surface. Fill all lifting holes with grout. Exterior surfaces, including base (unless cast in place) of vaults shall be dampproofed. For the vaults with sumps, the manhole floor shall be smooth and shall slope uniformly toward the sump at not less than ¼ inch per foot or no more than ½ inch per foot.

3.3 Testing:

A. Vacuum Testing of Manholes: The CONTRACTOR shall conduct a vacuum test on each manhole, or conduct a leakage test in conjunction with the test on the sewer. Test shall be conducted in accordance with ASTM C1244. It is recommended the vacuum test be completed prior to backfilling around the manhole.

1. All lift holes shall be plugged with non-shrink mortar.
2. All pipes entering the manhole shall be temporarily plugged, taking care to securely brace the pipes and plugs to prevent them from being drawn into the manhole.
3. The test head shall be placed at the top of the manhole in accordance with the manufacturer's recommendations.
4. A vacuum of 10 in. of mercury shall be drawn on the manhole, the valve on the vacuum line of the test head closed, and the vacuum pump shut off. The time shall be measured for the vacuum to drop to 9 in. of mercury.
5. The manhole shall pass if the time for the vacuum reading to drop from 10 in. of mercury to 9 in. of mercury meets or exceeds the values indicated in Table 1.
6. If the manhole fails the initial test, necessary repairs shall be made by an approved method. The manhole shall then be re-tested until a satisfactory test is obtained.

TABLE 1 - Minimum Test Times for Various Manhole Diameters

	Diameter, (in.)								
Depth	30”	33”	36”	42”	48”	54”	60”	66”	72”
(ft)	Time, (sec.)								
8	11	12	14	17	20	23	26	29	33
10	14	15	18	21	25	29	33	36	41
12	17	18	21	25	30	35	39	43	49
14	20	21	25	30	35	41	46	51	57
16	22	24	39	34	40	46	52	58	67
18	25	27	32	38	45	52	59	65	73
20	28	30	35	42	50	53	65	72	81
22	31	33	39	46	55	64	72	79	89
24	33	36	42	51	59	64	78	87	97
26	36	39	46	55	64	75	85	94	105
28	39	42	49	59	69	81	91	101	113
30	42	45	53	63	74	87	98	108	121

B. Leak Testing Vaults/Structures: The concrete wet wells shall be leak tested prior to installation of equipment and acceptance. The wet well shall be filled with clean water to a minimum depth equal to the lowest invert. If necessary, allow time for the concrete to saturate before refilling the wet well and beginning the leak test. The wet well shall be observed for a period of 4 hours. The level of water in the wet well shall not drop during the test period.
   1. If the water level drops in the first 4 hours, the test shall be extended another 4 hours. If the level continues to drop, the source of the leak shall be identified and corrected and the test repeated.
   2. To facilitate identification of potential leaks, it is recommended that backfilling does not commence until the leak test has passed.

3.4 MANHOLE ADJUSTMENT:

A. Existing Manhole frames and covers shall be adjusted through the use of grade rings or the removal and replacement of the riser sections as determined by the CONTRACTOR. If the total adjustment including the existing rings is in excess of eight inches, an existing manhole

section shall be replaced with a new section having the correct dimensions, or an additional section added. CONTRACTOR shall verify the size and quantity of rings that will be required at each manhole to facilitate the adjustment.

3.5 EXISTING MANHOLE REMOVAL:

A. The CONTRACTOR shall excavate and remove all existing manholes as specified in the drawings. The manhole, frame and cover shall be removed and transported to the Owner's designated facility. The backfill of the existing manhole shall be with 3-inch minus pit run material. Filling of the manhole and removal of only the cone section and ring and cover will not be acceptable.

3.6 TIE TO EXISTING MANHOLES:

A. The CONTRACTOR shall make all required ties to existing manholes as neat as possible. The tie shall be made by saw cutting or chiseling out a hole in the location of the new sewer pipe. Large equipment such as track or rubber tire hoes shall not be used to knock a hole in the manhole. The manhole/new pipe connection shall be encased with concrete on the outside of the connection, and grouted on the inside. This connection shall be watertight.

B. The CONTRACTOR shall provide a new very smooth flowline inside the existing manhole to direct flow in the designated direction. All existing formed flowlines that are to be abandoned and any abandoned invert(s) shall be grouted watertight.

3.7 CONFINED SPACE ENTRY:

A. The Contractor shall satisfy confined space entry requirements for the Engineer and Owner to enter manholes and vaults. The requirements shall include furnishing and operating air quality testing equipment, furnishing and operating air movement equipment, furnishing communications equipment, and furnishing and operating other equipment and manpower to satisfy confined space entry requirements.

3.8 DURING CONSTRUCTION:

A. Following installation of the manhole, a plywood sheet or similar material shall be laid across the bottom of the manhole (above the flow line through the manhole) to prevent dirt and gravel from entering the sewer. This shall be removed with the manhole invert and adjoining sewer thoroughly cleaned, prior to final acceptance. When paving, a metal plate shall be placed over the top of the manhole opening to prevent material from falling into the manhole. CONTRACTOR shall remove any dirt, gravel or other construction debris from the manhole and adjacent sewer.

B. CONTRACTOR shall use whackers or similar equipment to assure compaction around the manholes meets specifications.

END OF SECTION

SECTION 33 11 13 – PUBLIC WATER UTILITY DISTRIBUTION PIPING

PART 1 - GENERAL

1.1 DESCRIPTION

A. SCOPE: The work covered by this section includes furnishing of ductile iron and HDPE pipe, fittings and appurtenances for buried yard piping in raw and potable water service.

1.2 RELATED DOCUMENTS

A. Drawings and general provisions of the Contract, including General and Supplementary Conditions and Division 01 Specification Sections, apply to this Section.

1.3 SUMMARY

A. This Section includes water-distribution piping and related components outside the building for water mains.

B. Related Requirements:
1. Section 09 90 00 Special Coatings
2. Section 33 01 10 Disinfection of Water Utility Piping System
3. Section 40 05 06 Couplings, Adapters, and Specials for Process Piping
4. Section 40 05 07 Hangers and Supports for Process Piping
5. Section 40 11 11 Valves and Actuators

1.4 REFERENCE SPECIFICATIONS, CODES, AND STANDARDS

AWWA C104 Cement-Mortar Lining for Ductile-Iron Pipe and Fittings for Water

AWWA C110 Ductile-Iron and Gray-Iron Fittings, 3 in through 48 in for Water

AWWA C111 Rubber-Gasket Joints for Ductile-Iron Pressure Pipe and Fittings

AWWA C115 Flanged Ductile-Iron Pipe with Ductile-Iron or Gray-Iron Threaded Flanges

AWWA C116 Protective Fusion-Bonded Epoxy Coatings for the Interior and Exterior Surfaces of Ductile-Iron and Gray-Iron Fittings for Water Supply Service.

AWWA C150 Thickness Design of Ductile-Iron Pipe

AWWA C151 Ductile-Iron Pipe, Centrifugally Cast for Water

AWWA C153 Ductile-Iron Compact Fittings. for Water Service

AWWA C600 Installation of Ductile Iron Water Mains and Their Appurtenances

AWWA C606 Grooved and Shouldered Joints

ASTM C 150 Portland Cement

1.5 DEFINITIONS

A. EPDM: Ethylene propylene diene terpolymer rubber.

B. LLDPE: Linear, low-density polyethylene plastic.

C. PE: Polyethylene plastic.

D. PP: Polypropylene plastic.

E. PVC: Polyvinyl chloride plastic.

1.6 ACTION SUBMITTALS

A. Product Data: For each type of product indicated.

B. Shop Drawings: Detail precast concrete vault assemblies and indicate dimensions, method of field assembly, and components.

1.7 INFORMATIONAL SUBMITTALS

A. Coordination Drawings: For piping and specialties including relation to other services in same area, drawn to scale. Show piping and specialty sizes and valves, meter and specialty locations, and elevations.

B. Field quality-control test reports.

1.8 CLOSEOUT SUBMITTALS

A. Operation and Maintenance Data: For water valves and specialties to include in emergency, operation, and maintenance manuals.

1.9 QUALITY ASSURANCE

A. Regulatory Requirements:
   1. Comply with requirements of utility company supplying water. Include tapping of water mains and backflow prevention.
   2. Comply with standards of authorities having jurisdiction for potable-water-service piping, including materials, installation, testing, and disinfection.
   3. Comply with standards of authorities having jurisdiction for fire-suppression water-service piping, including materials, hose threads, installation, and testing.

B. Piping materials shall bear label, stamp, or other markings of specified testing agency.

C. Comply with ASTM F 645 for selection, design, and installation of thermoplastic water piping.

D. NFPA Compliance: Comply with NFPA 24 for materials, installations, tests, flushing, and valve and hydrant supervision for fire-service-main piping for fire suppression.

E. NSF Compliance:
   1. Comply with NSF 14 for plastic potable-water-service piping.
   2. Comply with NSF 61 for materials for water-service piping and specialties for domestic water.

1.10 DELIVERY, STORAGE, AND HANDLING

A. The CONTRACTOR shall be responsible for all such material furnished by him and shall replace, at his own expense, all such material found defective in manufacture or damaged in handling after delivery by the manufacturer. This shall include the furnishing of all materials and labor required for the replacement of installed material discovered defective prior to the final acceptance of the Work or during the guarantee period.

B. Preparation for Transport: Prepare valves, including fire hydrants, according to the following:
   1. Ensure that valves are dry and internally protected against rust and corrosion.
   2. Protect valves against damage to threaded ends and flange faces.
   3. Set valves in best position for handling. Set valves closed to prevent rattling.

C. During Storage: Use precautions for valves, including fire hydrants, according to the following:

1. Do not remove end protectors unless necessary for inspection; then reinstall for storage.
2. Protect from weather. Store indoors and maintain temperature higher than ambient dew-point temperature. Support off the ground or pavement in watertight enclosures when outdoor storage is necessary.

D. Handling: Use sling to handle valves and fire hydrants if size requires handling by crane or lift. Rig valves to avoid damage to exposed parts. Do not use handwheels or stems as lifting or rigging points.

E. Deliver piping with factory-applied end caps. Maintain end caps through shipping, storage, and handling to prevent pipe-end damage and to prevent entrance of dirt, debris, and moisture.

F. Protect stored piping from moisture and dirt. Elevate above grade. Do not exceed structural capacity of floor when storing inside.

G. Protect flanges, fittings, and specialties from moisture and dirt.

H. Store plastic piping protected from direct sunlight. Support to prevent sagging and bending.

1.11 PROJECT CONDITIONS

A. Interruption of Existing Water-Distribution Service: Do not interrupt service to facilities occupied by Owner or others unless permitted under the following conditions and then only after arranging to provide temporary water-distribution service according to requirements indicated:
1. Notify Construction Manager no fewer than two days in advance of proposed interruption of service.
2. Do not proceed with interruption of water-distribution service without Construction Manager's written permission.

1.12 COORDINATION

A. Coordinate connection to water main with the City. The Contractor shall give the City a minimum of 48-hours notice.

B. Only the City personal shall operate existing water valves.

PART 2 - PRODUCTS

2.1 FUSED JOINT POLYETHYLENE (HDPE) PIPE:

A. HDPE pipe may be used for potable water and wastewater, See Section 33 31 13 - “Sanitary utility Sewerage Force Mains” for requirements.

2.2 DUCTILE IRON PIPE, JOINTS, AND FITTINGS

A. The pipe shall be designed, manufactured, tested, inspected, and marked according to AWWA

B. Flanged Pipe: Fabricate in accordance with ANSI/AWWA C115.

C. Non-Flanged Pipe: Conform to ANSI/AWWA CI51 for material, pressure, dimensions, tolerances, tests, markings, and other requirements.

D. Exposed Piping: If not otherwise specified, use Special Thickness Class 53 for three-inch to 54-inch diameter.

1. Pipe greater than 16-inch and intended for grooved pipe joining application shall be thickness class as required by pipe manufacturer for grooved connections.

E. Flanged Joints: Conform to ANSI/AWWA 0110 and ANSI/AWWA C111 capable of meeting the pressure rating or special thickness class, and test pressure specified in Section 400505 Exposed Piping Installation and the piping schedule.
   a. Gaskets: Unless otherwise specified, gaskets shall be at least 1/8-inch thick, ring or full-face as required for the pipe, of synthetic rubber compound containing not less than 50 percent by volume nitrile or neoprene, and shall be free from factice, reclaimed rubber, and other deleterious substances. Gaskets shall be suitable for the service conditions specified, specifically designed for use with ductile iron pipe and fittings.
   b. Bolts: Comply with ANSI B18.2.1.
      i. Buried or Submerged: ASTM A193, Grade B8M, Class 2, Heavy hex, Type 316 stainless steel.
      ii. Exposed: ASTM A307, Grade B.
   c. Nuts: Comply with ANSI B18.2.2.
      i. Exposed: ASTM A563, Grade A, Heavy hex.
      ii. Buried or Submerged: ASTM A194, Grade B8M, Heavy hex, Type 316 stainless steel.

F. Grooved End Joints: Comply with ANSI/AWWA C606.
   a. Gaskets: Flush seal type designed for ductile iron that complies with or exceeds requirements of ASTM D2000
   b. Bolts and nuts: As specified for flanged joints.
   c. Unless otherwise specified, grooved end couplings shall be rigid joint for exposed service and flexible joint for buried service.
   d. Products and Manufacturers:
      i. See Section 400506 – COUPLINGS, ADAPTERS, SPECIALS FOR PROCESS PIPING.

2.3 GATE VALVES

A. AWWA, Cast-Iron Gate Valves:
   1. Buried valves shall be epoxy coated gate valves.
   2. All gate valves shall also include valve boxes for elevations specified shown on the construction drawings.
      a. Valve boxes shall be cast iron, adjustable, slip type, round base, 5¼-inch stem opening with necessary extensions to adjust the box height from the valve to the ground level, or future finished street level. Lids for valve boxes shall be cast iron and shall have the word "WATER" clearly cast on the top surface of the lid.
      b. Boxes shall be painted in accordance with the provisions and requirements set forth in AWWA Standard C550, latest edition. Valve boxes shall be Tyler 6855, or Engineer approved equal. Boxes shall be double wrapped in an 8-mil thick sheet of polyethylene encasement.
      c. Valve boxes of the length required to reach the ground surface, while maintaining a 6-inch overlap in height adjustment, shall be provided. If the top of the operating nut is more than 6 feet from the ground surface, an extension shall be provided. The nut on the extension shall be centered in the box and attached to the operating nut on the valve.
      d. Valves with a bury depth of 8 feet or more shall be supplied with a valve stem extension that ends approximately 6-12 inches below finished grade. The extension stem shall be pinned to the valve operating nut. In addition to the valve stem extensions the

CONTRACTOR shall provide to the OWNER 2 Tee handle wrenches with a total length of 12 feet and 2 Tee handle wrenches with a total length of 4 feet.

3. Gate valves shall be iron body gate valves conforming to AWWA C500. The gate valves shall be made with flanged ends conforming to ANSI B16.1 Class 125.
4. Gate valves shall have a non-rising stem, "O" ring seals and shall have iron bodies, parallel seats, and shall be fully bronze mounted. The valve interior shall be coated with an epoxy coating conforming to AWWA C550.
5. All metal valves shall be installed with a polyethylene encasement meeting the provisions and requirements of AWWA C105, latest edition. The polyethylene film shall have a minimum nominal thickness of 0.008 inches (8 mils)
6. The direction of opening shall be counter-clockwise.
7. Manufactured by Mueller, or Engineer approved equal.

2.4 CEMENT-MORTAR LINING

A. Cement-Mortar Lining for Shop Application: Except as otherwise provided herein, interior surfaces of ductile iron pipe, fittings, and specials shall be cleaned and lined in the shop with cement-mortar lining applied centrifugally in conformity with AWWA C104. During the lining operation and thereafter, the pipe shall be maintained in a round condition by suitable bracing or strutting. The lining machines shall be of a type that has been used successfully for similar work. Every precaution shall be taken to prevent damage to the lining. If lining is damaged or found defective at the Site, the damaged or unsatisfactory portions shall be replaced with lining conforming to these Specifications.

1. Cement: Cement for mortar lining shall conform to the requirements of AWWA C104; provided, that cement for mortar lining shall be Type II or V. Cement shall not originate from kilns that burn metal-rich hazardous waste fuel, nor shall a fly ash or pozzolan be used as a cement replacement.

B. The minimum lining thickness shall be as follows:

Nominal Pipe Diameter, inches	Minimum Lining Thickness, inches
3 - 12	1/16
14 - 24	3/32
30 - 64	1/8

C. Protection of Pipe Lining/Interior: Shop-applied cement mortar lining shall be given a seal coat of asphaltic material in conformance with AWWA C104.

2.5 EXTERIOR PROTECTION OF PIPE

A. Exterior Coating of Exposed Piping: The exterior surfaces of pipe which will be exposed to the atmosphere inside structures or above ground shall be thoroughly cleaned and then given a shop coat of primer conforming to the requirements of Section 09 97 00 – Special Coatings.

2.6 INSULATION BOARD:

A. As indicated in the drawings and/or where a minimum depth of 4 feet of cover cannot be maintained over the water line, rigid, extruded polystyrene insulation board is to be provided. The board is to comply with ASTM C578 Type IV. The board shall have a minimum aged R-value per inch of 5.0 per ASTM C518, a minimum compressive strength of 25 psi per ASTM D1621; a maximum water absorption per ASTM C272 of 0.2% by volume, and a maximum linear change according to ASTM D2126 of 3%. The board is to be 2 inches thick with a composite thickness as identified in Table 1 below. The board is to be Dow Styrofoam Brand or approved equal.

TABLE 1 – INSULATION BOARD COVER

Depth of Backfill over Insulation	Insulation Thickness	Insulation Width
24"	2.0"	4.0'
36"	1"	4.0'
48"	-	-
60"	-	-
72"	-	-

2.7 WARNING TAPE, TRACER WIRE, AND REFERENCE MARKER:

A. Warning Tape: tape shall have a minimum overall thickness of 5 mils without conductor wires. Tape shall be impervious to all known alkalis, chemical reagents, and solvents found in the soil. Color coding shall be in conformance with the APWA/ULCC Color Code. Warning tape shall have a minimum width of 3 inches for pipe 12 inches and smaller, and a minimum width of 12 inches for larger pipe. The maximum imprint length shall be thirty-six inches. Tape shall be Carsonite Tuff-Tape or approved equal.

B. Tracer wire shall be a minimum of 10-gauge, insulated copper wire suitable for buried pipeline conditions attached to all pipelines and services lines. The tracer wire shall be terminated and brought to the surface prior to entering buildings or vaults, located in a tracer wire access/termination box or valve box. Tracer wire access boxes shall be rated for light or heavy duty traffic, having a cast iron lid with stainless steel terminal ends mounted to the lid and indicate the type of use, i.e. “Water”, “Sewer”. Access boxes shall be manufactured by Valvco, Copperhead, or equal.

C. Pipeline reference marking posts shall be placed at the State rights-of-way lines on the directional drill. The reference markers shall have tracer wire test terminals at the surface of each marking post. Reference markers shall be color coded to conform to the APWA/ULCC Color Code. Tracer wire reference posts shall be manufactured by Carsonite International or approved equal

2.8 CORROSION-PROTECTION PIPING ENCASEMENT

A. Encasement for Underground Metal Piping, Fittings, and Valves:
   1. Standards: AWWA C105.
   2. Form: Sheet or tube.
   3. Material: LLDPE film of 0.008-inch minimum thickness.
   4. Color: Black.

PART 3 - EXECUTION

3.1 EARTHWORK

A. Refer to Division 31.

3.2 PIPING APPLICATIONS

A. General: Use pipe, fittings, and joining methods for piping systems according to the following applications.

B. Transition couplings and special fittings with pressure ratings at least equal to piping pressure rating may be used, unless otherwise indicated.

C. Do not use flanges or unions for underground piping.

D. Flanges, unions, grooved-end-pipe couplings, and special fittings may be used, instead of joints indicated, on aboveground piping and piping in vaults.

3.3 VALVE APPLICATIONS

A. General Application: Use mechanical-joint-end valves for NPS 3 and larger underground installation. Use threaded- or flanged-end valves for installation in vaults. Use UL/FMG, nonrising-stem gate valves for installation with indicator posts.

B. Drawings indicate valve types to be used. Where specific valve types are not indicated, the following requirements apply:
   1. Underground Valves, NPS 3 and Larger: AWWA, cast-iron, nonrising-stem, resilient-seated gate valves with valve box.

3.4 PIPING INSTALLATION

A. Water-Main Connection: Tap water main according to requirements of City and of size and in location indicated. The City and Engineer shall be present to observe all connections to the existing water system.

B. Install ductile-iron, water-service piping according to AWWA C600 and AWWA M41.

C. Install HDPE pipe according to AWWA M55.

D. Install underground piping with restrained joints at horizontal and vertical changes in direction. Use restrained-joint piping, thrust blocks, anchors, tie-rods and clamps, and other supports.

E. Install pipe following the manufacturer's specifications and instructions. Provide all tools and equipment required to install each type of pipe used.

F. The Contractor is responsible for all contractor furnished material. Replace all defective material or material damaged by handling after delivery by the manufacturer. This includes the furnishing of all materials and labor required to replace installed material discovered damaged or defective before final acceptance of the work, or during the guarantee period.

G. Store all material safely and to prevent damage. Keep pipe interior and other accessories free from dirt and foreign matter at all times.

H. Deliver and distribute all Contractor furnished pipe at this site. Load and unload pipe, fittings, specials, valves and accessories to prevent damage. Do not permit pipe handled on skidways to skid or roll against pipe already on the ground.

I. When distributing material at the work site, lay each piece adjacent to its installation point. Repair or replace all damaged pipe at no cost to the OWNER.

J. Remove all water in the trench during pipe laying and maintain a dry trench until the pipe ends area sealed. Do not permit the pipe to float. Do not allow any trench water to enter the pipe at any time.

K. Separation With Sewers: Water mains and water service lines shall be installed to provide at least a 10-foot horizontal separation from any existing sanitary or storm sewer. This distance shall be measured from edge-of-pipe to edge-of-pipe. These requirements include service lines. At crossings, a minimum vertical distance of 18-inches from edge-of-pipe to edge-of-pipe shall be maintained

between the water and the sewer pipes. This shall be the case when the water main is either above or below the sewer. At crossings, one full length of water main shall be located so both joints are as far as possible from the sewer.

1. At all crossings, pipe and backfill shall be properly installed to support the pipes. The material is to be tamped and rodded to fill all voids adjacent to and below both pipes and to compact the fill material.
2. Where unusual situations are encountered that make it impossible to follow the requirements of this section a different approach might be required. That approach is to be designed on a case-by-case basis with the design for that particular separation approved by the Owner and the Alaska Department of Environmental Conservation. The Contractor shall be paid for this particular work as required as a changed site condition.

3.5 JOINT CONSTRUCTION

A. Make pipe joints according to the following:
   1. Ductile-Iron Piping, Gasketed Joints for Water-Service Piping: AWWA C600 and AWWA M41.
   2. HDPE butt-fusion joints according to AWWA M55. HDPE to Ductile Iron adaptors can be used for connections to existing ductile iron pipe.

3.6 CONNECTIONS TO EXISTING MAINS

A. Make all connections to existing water mains in use unless otherwise specified. Furnish the special fittings, as shown on the plans, and all other material required. Make all necessary excavations to assure gradual transition between the new and existing water main and perform all necessary backfilling.

B. Where the connection of new work to old requires a service interruption and customer notification, the Owner and the Contractor are to mutually agree upon a date for connections to permit adequate time to assemble labor and materials, and to notify all affected customers. All notifications are the Contractor's responsibility.

C. The Owner will operate all existing valves.

3.7 ANCHORAGE INSTALLATION

A. Anchorage, General: Install water-distribution piping with restrained joints as indicated in the drawings. Anchorages and restrained-joint types that may be used include the following:
   1. Concrete thrust blocks.
   2. Locking mechanical joints.
   3. Set-screw mechanical retainer glands.
   4. Bolted flanged joints.
   5. Pipe clamps and tie rods.

B. Install anchorages for tees, plugs and caps, bends, crosses, valves, and hydrant branches. Include anchorages for the following piping systems:
   1. Gasketed-Joint, Ductile-Iron, Water-Service Piping: According to AWWA C600.
   2. HDPE pipe according to AWWA M55.

C. Apply full coat of asphalt or other acceptable corrosion-resistant material to surfaces of installed ferrous anchorage devices.

3.8 VALVE INSTALLATION

A. AWWA Gate Valves: Comply with AWWA C600 and AWWA M44. Install each underground valve with stem pointing up and with valve box.

B. AWWA Valves Other Than Gate Valves: Comply with AWWA C600 and AWWA M44.

3.9 FIELD QUALITY CONTROL

A. Piping Tests: See Section 33 01 10 Disinfection of Water Utility Piping System.

3.10 STERILIZING WATER MAINS:

A. See Section 33 01 10 Disinfection of Water Utility Piping System.

3.11 IDENTIFICATION

A. Warning Tape: Install utility warning tape and tracer wire along the entire route of new water main. Install warning tape 18 inches below the finished grade. Install the tracer wire 18 inches above the water main and fire hydrant leads. Install the tracer wire to the ground surface in each gate valve box and physically connect the wire to the inside of each valve box to ensure that the tracer wire does not interfere with insertion or operation of the valve key. Costs associated with furnishing and installing the warning tape and tracer wire shall be merged with the cost for water main installation.

B. Tracer Wire: Tracer wire shall be installed on all pipe as shown in the details, and shall be located above the pipe as shown on the details. The tracer wire shall be insulated and brought to the surface in test station boxes at all appurtenances, or as indicated in the drawings. The continuing wire shall also have a lead which begins at the surface and follows appurtenances to the underground pipe. Tracer wire shall be attached to top of pipe by tape at 10-foot maximum intervals.
The system of tracer wire shall be continuous. Splicing or other means used to provide a continuous wire, along with leads for testing, shall be approved by the ENGINEER.

END OF SECTION

SECTION 33 31 13 - PUBLIC SANITARY UTILITY SEWERAGE PIPING

PART 1 - GENERAL

1.1 RELATED DOCUMENTS

A. Drawings and general provisions of the Contract, including General and Supplementary Conditions and Division 01 Specification Sections, apply to this Section.

1.2 SUMMARY

A. The Work covered under this section includes furnishing and installing all gravity sanitary sewer piping on this project. Requirements of this section also apply to water treatment plant waste piping and any exterior potable water piping.

B. Related Requirements:
   1. Section 33 01 10 Disinfection of Water Utility Piping Systems
   2. Section 31 20 00 Earth Moving
   3. Section 31 50 00 Excavation Support and protection

1.3 ACTION SUBMITTALS

A. Furnish submittals in accordance with Section 013300 – Contractor Submittals.

1.4 INFORMATIONAL SUBMITTALS

A. Coordination Drawings: Show pipe sizes, locations, and elevations. Show other piping in same trench and clearances from sewer system piping. Indicate interface and spatial relationship between manholes, piping, and proximate structures.

B. Product Certificates: For each type of cast-iron soil pipe and fitting, from manufacturer.

C. Field quality-control reports.

1.5 DELIVERY, STORAGE, AND HANDLING

A. The CONTRACTOR shall be responsible for all such material furnished by him and shall replace, at his own expense, all such material found defective in manufacture or damaged in handling after delivery by the manufacturer. This shall include the furnishing of all materials and labor required for the replacement of installed material discovered defective prior to the final acceptance of the Work or during the guarantee period.

B. The CONTRACTOR shall be responsible for the safe storage of material furnished by him or to him and accepted by him and intended for the Work, until it has been incorporated in the completed project. The interior of all pipe and other accessories shall be kept free from dirt and foreign matter at all times.

C. Pipe shall be carefully inspected for soundness before being installed in the trench. Rejected pipe and fittings shall be removed from the site immediately and permanently.

D. Do not store plastic pipe, and fittings in direct sunlight.

E. Protect pipe, pipe fittings, and seals from dirt and damage.

F. Handle manholes according to manufacturer's written rigging instructions.

1.6 PROJECT CONDITIONS

A. Interruption of Existing Sanitary Sewerage Service: Do not interrupt service to facilities occupied by Owner or others unless permitted under the following conditions and then only after arranging to provide temporary service according to requirements indicated:
   1. Notify Owner and Engineer no fewer than two (2) days in advance of proposed interruption of service.
   2. Do not proceed with interruption of service without written permission for the Engineer.

1.7 FUSIBLE PIPE – SPECIFIC REQUIREMENTS

A. Fusion Technician Requirements: Fusion Technician shall be fully qualified by the pipe supplier to install fusible polyvinylchloride or HDPE pipe of the type(s) and size(s) being used. Qualification shall be current as of the actual date of fusion performance on the project.

A. Submittals
   1. The following PRODUCT DATA is required from the pipe supplier and/or fusion provider:
      a. Name of the pipe manufacturer and a list of the piping and quantities to be provided by manufacturer.
      b. Product data and pipe supplier data indicating conformance with this specification and applicable standards, including written documentation regarding any intended variance from this specification and applicable standards. This will include experience of pipe supplier by years and number of projects; warranty information; and independent laboratory testing certification.
      c. Material and pipe property testing in conformance with this specification and applicable standards indicating conformance from the pipe extruder per AWWA C900 and AWWA C905:
      d. Dimensional Checks
      e. Pipe Burst
      f. Flattening
      g. Extrusion Quality (Acetone Immersion)
      h. Test results will be prepared and made available from the pipe extruder to the Owner or Engineer upon request, for each extrusion run.
      i. Fusion joint data and fusion technician data indicating conformance with this specification and applicable standards, including written documentation regarding any intended variance from this specification and applicable standards. This will include fusion joint warranty information and recommended project specific fusion parameters, including criteria logged and recorded by data logger.
      j. Material, pipe property, and dimensional data for casing pipe, if used.
   2. The following AS-RECORDED DATA is required from the contractor and/or fusion provider:
      a. Fusion report for each fusion joint performed on the project, including joints that were rejected. Submittals of the Fusion Technician's joint reports are required as requested by the Owner or Engineer. Specific requirements of the Fusion Technician's joint report shall include:
      b. Pipe Size and Dimensions
      c. Machine Size
      d. Fusion Technician Identification
      e. Job Identification Number
      f. Fusion Number
      g. Fusion, Heating, and Drag Pressure Settings
      h. Heat Plate Temperature
      i. Time Stamp

j. Heating and Cool Down Time of Fusion
k. Ambient Temperature

PART 2 - PRODUCTS

2.1 FUSED JOINT POLYETHYLENE (HDPE) PIPE:

A. Fused joint Polyethylene (HDPE D.I.P.S.) pipe may be used as specified on the construction drawings. It must meet the pressure rating and minimum outside diameter requirements of the D.I. pipe and be installed per Part 3.0 of this section. The pipe shall be WL Polyethylene Pipe or approved equal. The minimum pressure ratings shall be:

- DR17 (pressure rating of 125 psi) as a minimum

The Contractor shall provide acceptable restrained joint transition fittings to D.I. pipe (or other pipe) at both ends of the HDPE. All joints and connections within the HDPE section shall be fusion welded, or restrained per these specifications.
The pipe, fittings and accessories shall conform to the following standards as applicable:

- AWWA C906 - Polyethylene (PE) Pressure Pipe and Fittings, 4" – 63" for Water Distribution.
- ASTM D2683 - Socket Type Polyethylene fittings for Outside Diameter-Controlled Polyethylene Pipe and Tubing.
- ASTM D3261 - Butt Heat Fusion Polyethylene (PE) Plastic Fittings for Polyethylene (PE) Plastic Pipe and Tubing.
- ASTM D3350 - Standard Specification for Polyethylene Plastics Pipe and Fittings Materials.
- PPI TR-3 - Policies and Procedures for Developing Recommended Hydrostatic Design Stresses for Thermoplastic Pipe Materials.
- PPI TR-4 - Recommended Hydrostatic Strengths and Design Stresses for Thermoplastic Pipe and Fittings Compounds
- NSF Standard #14 - Plastics Piping Components and Related Materials.

B. Material. Materials used for the manufacturing of polyethylene pipe and fittings shall be PE4710 High Density Polyethylene (HDPE) meeting the ASTM D3350 cell classification of 345434C. The material shall have a minimum Hydrostatic Design Basis (HDB) of 1600 psi at 75°F when tested in accordance with PPI TR-3 and shall be listed in the name of the pipe and fitting manufacturer in PPI TR-4. The material used in the production of potable water pipe shall be approved by the National Sanitation Foundation (NSF). The Manufacturer shall certify that the materials used to manufacture pipe and fittings meet the requirements of this specification.

C. Pipe. Polyethylene pipe shall be manufactured in accordance with AWWA C901 for sizes ½" through 3" and in accordance with AWWA C906 for sizes 4" through 54".

D. Fittings. Polyethylene fittings shall be made from material meeting the same requirements as the pipe. Polyethylene fittings shall be molded or fabricated by the manufacturer of the pipe. Where applicable, fittings shall meet the requirements of AWWA C906. Molded fittings shall be manufactured in accordance with either ASTM D2683 (socket fused) or ASTM D3261 (butt fused) and shall be so marked. HDPE to Ductile Iron transition fittings are allowed as follows:

1. Transition fittings and flange adaptors shall be of the same materials allowed in the Buried Valve specification below and shall be installed with polyethylene encasement.
2. HDPE flange adapter with steel backing rings or Mega-lug style as provided by EBAA Iron series 2100 are allowed.

E. Mechanical Fittings used with polyethylene pipe shall be specifically designed for, or tested and found to be acceptable for use with polyethylene pipe. Mechanical fittings designed for other materials shall not be used unless authorized by the mechanical fittings manufacturer. Special precautions may exist with certain mechanical fittings or additional components may be required – consult the manufacturer of the fitting prior to its use.

F. Couplings used to make the connection between HDPE and D.I. shall be restrained. Restraint can be made using a butt-fused flange adaptor with stainless steel backup ring onto the HDPE end and an approved restrained flanged coupling adaptor on the D.I side. Alternatively, an MJ adaptor may be butt-fused to the HDPE pipe and a restrained MJ coupling with Meg-a-Lug restraints connection on the D.I end. The CONTRACTOR shall submit the coupling and the restraint system to the ENGINEER for approval.

G. Manufacturer's Quality Control. The pipe and fitting Manufacturer shall have an established quality control program responsible for inspecting incoming and outgoing materials. Incoming polyethylene materials shall be inspected for density, melt flow rate, and contamination. The cell classification properties of the material shall be certified by the supplier. Incoming materials shall be approved by Quality Control before processing into finished goods. Outgoing products shall be tested as required in AWWA C901 or C906. The Manufacturer shall maintain permanent Quality Control (QC) and Quality Assurance (QA) records. Certification or copy of these records shall be made available to the purchaser on request.

2.2 Lateral Wyes: All lateral tees shall be manufactured of the same material as the main line pipe. The connection to the main shall be made by a 45° wye. The lateral connection shall be in line type for new construction or a saddle type for existing installations, as approved by ENGINEER. All lateral connections shall be sized as required by the drawings.

2.3 Manholes: Manholes shall be constructed of precast reinforced concrete according to Section 330513 "Manholes and Structures".

2.4 Cleanouts

A. Cast-Iron Cleanouts:
1. Manufacturers: Subject to compliance with requirements, available manufacturers offering products that may be incorporated into the Work include, but are not limited to, the following:
   a. Smith, Jay R. Mfg. Co.
   b. WADE
   c. Tyler Pipe.
   d. Watts Water Technologies, Inc.
   e. Zurn Specification Drainage Operation; Zurn Plumbing Products Group.
2. Description: ASME A112.36.2M, round, gray-iron housing with clamping device and round, secured, scoriated, gray-iron cover. Include gray-iron ferrule with inside calk or spigot connection and countersunk, tapered-thread, brass closure plug.
3. Top-Loading Classification(s): Heavy Duty.

2.5 FITTINGS

A. Sleeve Type Couplings: Coating shall be fusion bonded epoxy coated and be a minimum of 10-mils thick. Couplings shall be ductile iron Dresser Style 253 or 254 Long Sleeve, or approved, equal, for ductile iron or PVC. Bolts, nuts and washers are to be series 300 stainless steel.

2.6 JOINT RESTRAINTS:

A. If called for in the drawings or in other cases where conditions warrant and approved by the ENGINEER, mechanical restraints shall be used. They shall be as follows:
   1. DIP Pipe: Joint restraints on fittings and valves shall include a restraining mechanism which when installed, imparts a multiple wedging action against the pipe. Flexibility in joints shall be maintained after burial. All metal in the joint restraint shall be stainless steel, or coated as noted below. T-bolts and gland bolts shall be stainless steel or coated with 10 mils of fusion bonded epoxy. The restraining device shall have working pressure of at least 250 psi and a minimum safety factor of 2:1. The restraint shall be EBAA Iron MEGALUG, or approved equal.
   2. Flange Adaptor with Gap: If called for on the drawings, a flange adaptor shall be used which provides a gap for future disassembly. This shall be an EBAA Iron 2100, or approved equal.
   3. Coatings: The coating on mechanical restraints shall be electrostatically applied polyester, 4 mils minimum, following surface preparation of a minimum of an iron phosphate bath, rinse and heat drying. The coating shall be EBAA-Iron Mega-Bond, or approved equal. Wedge assemblies may be Xylan fluoropolymer coated, 2 coats minimum.

2.7 TAPPING-SLEEVE ASSEMBLIES:

A. Available Manufacturers: Subject to compliance with requirements, manufacturers offering products that may be incorporated into the Work include, but are not limited to, the following:
   1. Mueller Co.; Water Products Div.
   2. Ford Meter Box Company, Inc

B. Description: Sleeve and valve compatible with drilling machine.
   1. Standard: MSS SP-60 *"Connecting Flange Joint Between Tapping Sleeve and Tapping Valve".*
   2. Tapping Sleeve: Sleeve shall be stainless-steel, two-piece bolted sleeve with flanged outlet for new branch connection. Include sleeve matching size and type of pipe material being tapped and with recessed flange for branch valve.
   3. Valve: AWWA, cast-iron, nonrising-stem, resilient-seated gate valve with one raised face flange mating tapping-sleeve flange.

2.8 BURIED GATE VALVES

A. AWWA, Cast-Iron Gate Valves:
   1. Available Manufacturers: Subject to compliance with requirements, manufacturers offering products that may be incorporated into the Work include, but are not limited to, the following:
      a. McWane, Inc.; Kennedy Valve Div.
      b. Mueller Co.; Water Products Div.
   2. Nonrising-Stem, Resilient-Seated Gate Valves:
      a. Description: Gray- or ductile-iron body and bonnet; with bronze or gray- or ductile-iron gate, resilient seats, bronze stem, and stem nut for buried applications.
         1) Standard: AWWA C509.
         2) Minimum Pressure Rating: 200 psig.
         3) End Connections: Mechanical joint or flange.
         4) Interior Coating: Complying with AWWA C550.

2.9 VALVE BOXES

A. Valve boxes shall be cast iron, adjustable, slip type, round base, 5¼-inch stem opening with necessary extensions to adjust the box height from the valve to the ground level, or future finished street level. Lids for valve boxes shall be cast iron and shall have the word "SEWER" clearly cast on the top surface of the lid. Boxes shall be painted in accordance with the provisions and requirements set forth in AWWA Standard C550, latest edition. Valve boxes shall be Tyler 6855, or approved equal. Boxes shall be double wrapped in an 8-mil thick sheet of polyethylene encasement.

B. Valve boxes of the length required to reach the ground surface, while maintaining a 6-inch overlap in height adjustment, shall be provided. If the top of the operating nut is more than 6 feet from the ground surface, an extension shall be provided. The nut on the extension shall be centered in the box and attached to the operating nut on the valve.

2.10 VALVE STEM EXTENSIONS

A. Valves with a bury depth of 8 feet or more shall be supplied with a valve stem extension that ends approximately 6-12 inches below finished grade. The extension stem shall be pinned to the valve operating nut.

2.11 INSULATION BOARD:

C. As indicated in the drawings and/or where a minimum depth of 6 feet of cover cannot be maintained over the water line, rigid, extruded polystyrene insulation board is to be provided. The board is to comply with ASTM C578 Type IV. The board shall have a minimum aged R-value per inch of 5.0 per ASTM C518, a minimum compressive strength of 25 psi per ASTM D1621; a maximum water absorption per ASTM C272 of 0.2% by volume, and a maximum linear change according to ASTM D2126 of 3%. The board is to be 2 inches thick with a composite thickness of 4 inches. The board is to be Dow Styrofoam Brand, or approved equal.

TABLE 1 – INSULATION BOARD COVER

Depth of Backfill over Insulation	Insulation Thickness	Insulation Width
24"	2.0”	4.0'
36"	1"	4.0'
48"	-	-
60"	-	-
72"	-	-

2.12 WARNING TAPE, TRACER WIRE, AND REFERENCE MARKER:

D. **Warning tape.** Warning tape shall have a minimum overall thickness of 5 mils without conductor wires. Tape shall be impervious to all known alkalis, chemical reagents, and solvents found in the soil. Color coding shall be in conformance with the APWA/ULCC Color Code. Warning tape shall have a minimum width of 3 inches for pipe 12 inches and smaller, and a minimum width of 12 inches for larger pipe. The maximum imprint length shall be thirty-six inches. Tape shall be Carsonite Tuff-Tape, or approved equal.

E. Tracer wire shall be a minimum of 10-gauge, insulated copper wire suitable for buried pipeline conditions attached to all pipelines and services lines. The tracer wire shall be terminated and brought to the surface prior to entering buildings or vaults, located in a tracer wire

access/termination box or valve box. Tracer wire access boxes shall be rated for light or heavy duty traffic, having a cast iron lid with stainless steel terminal ends mounted to the lid and indicate the type of use, i.e. “Water”, “Sewer”. Access boxes shall be manufactured by Valvco, Copperhead, or equal.

PART 3 - EXECUTION

3.1 EARTHWORK

A. Excavating, trenching, and backfilling shall conform to the applicable portions of Division 31. Bedding pertains to both mains and service lines.

3.2 PIPING INSTALLATION

A. Handling of Pipe:
   1. All pipe furnished by the CONTRACTOR shall be delivered and distributed at the site by the CONTRACTOR. Pipe and accessories shall be loaded and unloaded by lifting with hoists or skidding so as to avoid shock or damage. Under no circumstances shall such materials be dropped. Pipe handled on skid-ways shall not be skidded or rolled against pipe already on the ground. Metal bands around pipe bundles shall be cut with a hand-held snips.
   2. In distributing the material at the site of the Work, each piece shall be unloaded opposite or near the place where it is to be installed. All material shall be stored in a neat and orderly manner.
   3. Pipe with plastic joint rings shall be handled in such a manner that no weight, including the weight of the pipe, will bear on or be supported by the plastic joint rings at any time. Care shall be taken to avoid dragging the spigot ring on the ground or allowing it to come in contact with gravel, crushed stone, rocks, or other hard objects. Joint rings, which have been damaged in any way, will not be accepted and shall not be incorporated in the Work.

B. Laying Pipe:
   1. All pipe shall be laid and maintained to the required lines and grades with fittings and tees installed at the required locations. Pipe runs shall be installed where indicated if the piping is dimensioned. Where piping is not dimensioned, the CONTRACTOR shall install the pipe as close as possible to the locations indicated, as approved by the ENGINEER.
   2. Wherever obstructions not shown on the plans are encountered during the progress of the Work and interfere to such an extent that an alteration in the plan is required, the ENGINEER shall have the authority to change the plans and order a deviation from the line and grade or arrange for the removal, relocation or reconstruction of the obstructions. If the change from the plans results in a change in the amount of Work by the CONTRACTOR, such altered Work shall be done on the basis of payment to the CONTRACTOR for extra work or credit to the OWNER for less work.
   3. Proper implements, tools, and facilities satisfactory to the ENGINEER shall be provided and used by the CONTRACTOR for the safe and convenient execution of the Work. All pipe and fittings shall be carefully lowered into the trench piece by piece by means of a derrick, ropes or other suitable tools or equipment, in such a manner as to prevent damage to pipe. Under no circumstances shall materials be dropped or dumped into position.
   4. Water shall not be allowed to accumulate in the trench during the laying of the pipe or the initial backfill operations. The trench shall be dewatered in accordance with Section

332319. The CONTRACTOR shall take all necessary precautions to prevent surface water from entering the sewer trench. The cost of dewatering the trench shall be included in the CONTRACTOR's bid.

5. Pipe shall be protected from lateral displacement by means of pipe embedment material installed as provided in Section 312000. Under no circumstances shall pipe be laid in water and no pipe shall be laid under unsuitable weather or trench conditions.
6. Every precaution shall be taken to prevent foreign material from entering the pipe while it is being placed in the line. If the pipe laying crew cannot put the pipe into the trench and in place without getting earth into it, the ENGINEER may require that before lowering the pipe into the trench, a heavy, tightly woven canvas bag of suitable size shall be placed over each end and left there until the connection is to be made to the adjacent pipe. Before final acceptance the CONTRACTOR shall remove from the pipe any foreign material which may have gotten into the line.
7. During laying operations, no debris, tools, clothing or other material shall be placed in the pipe. At times when pipe laying is not in progress, the open ends of pipe shall be closed by a watertight plug or other means approved by the ENGINEER.
8. Unless otherwise approved by the ENGINEER, the laying of pipe shall begin at the lowest point. For bell and spigot pipe, the pipe shall be installed so that the spigot ends point in the direction of flow.
9. Preparatory to making the joints, the pipe grade and alignment shall be checked and all dirt or other foreign matter shall be removed from the bell or coupling.

C. Rubber Gasketed Joints: Jointing of pipe made with a rubber gasket joint shall be made as recommended by the manufacturer. The rubber gasket and gasket seat inside the bell shall be wiped clean with a cloth. A thin film of lubricant, furnished with the pipe, shall be applied to the inside surface of the gasket. The plain end of the adjoining pipe shall be wiped clean and inserted into the bell a sufficient distance to make contact with the gasket. The plain end shall then be forced "home" by the use of a crow bar, fork tool or jack assembly.

D. Testing and Disinfection: Pipelines and appurtenances shall be tested and disinfected as specified in Section 33 01 10. Only potable water mains are to be disinfected.

E. Water and Sewer Main Separation: The sewer shall be laid at least 10-feet horizontally from any existing or proposed water main. This distance shall be measured from edge-of-pipe to edge-of-pipe. These requirements include service lines. At crossings, a minimum vertical distance of 18-inches from edge-of-pipe to edge-of-pipe shall be maintained between the water and the sewer pipes. This shall be the case when the water main is either above or below the sewer. At crossings, one full length of water main shall be located so both joints are as far as possible from the sewer.

F. At all crossings, pipe and backfill shall be properly installed to support the pipes. The material is to be tamped and rodded to fill all voids adjacent to and below both pipes and to compact the fill material.

G. Prior to final acceptance of the sewers, the CONTRACTOR must thoroughly flush and clean lines of any construction debris. The CONTRACTOR is responsible for collecting any debris in these lines and preventing it from passing on downstream into the sewer system.

H. Support of Sewer Crossings: Where a new pipeline crosses under an existing sewer main or sewer service, lean concrete (class E) will be placed between the two pipes to support the upper pipe. Lean concrete must extend fully between the lower pipeline and the upper pipe.

I. Warning Tape: Warning tape shall be buried eighteen to twenty-four inches below finish surface grade unless specified otherwise.

J. Tracer Wire: Tracer wire shall be installed on all pipe as shown in the details, and shall be located above the pipe as shown on the details. The tracer wire shall be insulated and brought to the surface in test station boxes at all appurtenances, or as indicated in the drawings. The continuing wire shall also have a lead which begins at the surface and follows appurtenances to the underground pipe. Tracer wire shall be attached to top of pipe by tape at 10-foot maximum intervals. The system of tracer wire shall be continuous. Splicing or other means used to provide a continuous wire, along with leads for testing, shall be approved by the ENGINEER.

K. Polyethylene Encasement: All buried metallic (ductile, cast iron, steel, etc) fittings, piping, valves and valve boxes, shall be double wrapped with polyethylene encasement and tightly taped to the adjoining pipe.

3.3 HDPE PIPE INSTALLATION

F. Installation and Testing. The Manufacturer shall supply an Installation Manual to the Project Engineer which outlines guidelines for handling, joining, installing, embedding and testing of polyethylene pipeline. These guidelines shall be used as reference material for the Project Engineer in his determination of the required procedures.

G. Joints between plain ends of polyethylene pipe shall be made by butt fusion when possible. The pipe manufacturer's fusion procedures shall be followed at all times as well as the recommendations of the fusion machine manufacturer. The wall thicknesses of the adjoining pipes shall have the same DR at the point of fusion.

H. When saddle connections are fusion welded, the Manufacturer's recommended saddle fusion procedures shall be used.

I. If mechanical fittings (which are designed for, or tested and found acceptable for use with polyethylene pipe) are utilized for transitions between pipe materials, repairs, joining pipe sections, saddle connections, or at other locations; the recommendation of the mechanical fitting manufacturer must be followed. These procedures may differ from other pipe materials.

J. On each day butt fusions are to be made, the first fusion of the day shall be a trial fusion. The trial fusion shall be allowed to cool completely, then fusion test straps shall be cut out. The test strap shall be 12" or 30 times the wall thickness in length (minimum) and 1" or 1.5 times the wall thickness in width (minimum). Bend the test strap until the ends of the strap touch. If the fusion fails at the joint, a new trial fusion shall be made, cooled completely and tested. Butt fusion of pipe to be installed shall not commence until a trial fusion has passed the bent strap test.

K. Socket and Saddle fusions shall be tested by a bent strap test as described by the pipe manufacturer. The pipe manufacturer shall provide visual guidelines for inspecting the butt, saddle, and socket fusion joints.

L. Pressure testing shall be conducted in accordance with the manufacturer's recommended procedures and Section 017430-Buried Piping Testing and Disinfection.

3.4 CLEANOUT INSTALLATION

A. Install cleanouts and riser extensions from sewer pipes to cleanouts at grade. Use cast-iron soil pipe fittings in sewer pipes at branches for cleanouts, and use cast-iron soil pipe for riser extensions to cleanouts. Install piping so cleanouts open in direction of flow in sewer pipe.
   1. Use Light-Duty, top-loading classification cleanouts in earth or unpaved foot-traffic areas.
   2. Use Medium-Duty, top-loading classification cleanouts in paved foot-traffic areas.
   3. Use Heavy-Duty, top-loading classification cleanouts in vehicle-traffic service areas.
   4. Use Extra-Heavy-Duty, top-loading classification cleanouts in roads.

B. Set cleanout frames and covers in earth in cast-in-place-concrete block, 18 by 18 by 12 inches deep. Set with tops 1 inch above surrounding grade.

C. Set cleanout frames and covers in concrete pavement and roads with tops flush with pavement surface.

END OF SECTION

SECTION 33 41 00 - STORM UTILITY DRAINAGE

PART 1 - GENERAL

1.1 RELATED DOCUMENTS

A. Drawings and general provisions of the Contract, including General and Supplementary Conditions and Division 01 Specification Sections, apply to this Section.

1.2 SUMMARY

A. Section Includes:
   1. Pipe and fittings.
   2. Non-pressure transition couplings.
   3. Expansion joints and deflection fittings.
   4. Stormwater Chases
   5. Cleanouts.

B. Related Requirements:
   1. Section 017430 - Buried Pipe Testing and Disinfection
   2. Section 312000 - Earth Moving
   3. Section 312319 - Dewatering
   4. Section 315000 - Excavation Support and Protection

1.3 ACTION SUBMITTALS

A. Furnish submittals in accordance with Section 013300 – Submittals.

1.4 INFORMATIONAL SUBMITTALS

A. Product Certificates: For each type of cast-iron soil pipe and fitting, from manufacturer.

B. Field quality-control reports.

1.5 DELIVERY, STORAGE, AND HANDLING

A. The CONTRACTOR shall be responsible for all such material furnished by him and shall replace, at his own expense, all such material found defective in manufacture or damaged in handling after delivery by the manufacturer. This shall include the furnishing of all materials and labor required for the replacement of installed material discovered defective prior to the final acceptance of the Work or during the guarantee period.

B. The CONTRACTOR shall be responsible for the safe storage of material furnished by him or to him and accepted by him and intended for the Work, until it has been incorporated in the completed project. The interior of all pipe and other accessories shall be kept free from dirt and foreign matter at all times.

C. Do not store plastic manholes, pipe, and fittings in direct sunlight.

D. Protect pipe, pipe fittings, and seals from dirt and damage.

E. Handle manholes according to manufacturer's written rigging instructions.

1.6 PROJECT CONDITIONS

A. Interruption of Existing Storm Drainage Service: Do not interrupt service to facilities occupied by Owner or others unless permitted under the following conditions and then only after arranging to provide temporary service according to requirements indicated:
   1. Notify Engineer no fewer than two days in advance of proposed interruption of service.
   2. Do not proceed with interruption of service without Engineer's written permission.

PART 2 - PRODUCTS

2.1 PVC PIPE AND FITTINGS

A. PVC Gravity Sewer Piping:
   1. Pipe and Fittings: ASTM D3034 (sizes 4" – 15"), ASTM F679 (18" – 36") SDR35,T-1 wall thickness, PVC gravity sewer pipe with bell-and-spigot ends and with integral ASTM F 477, elastomeric seals for gasketed joints.
   2. Fittings: ASTM D 3034/F679, PVC with bell ends.
   3. Service or Lateral Connections: PVC 45 deg wye or tee with sweep.

2.2 NON-PRESSURE TRANSITION COUPLINGS

A. Comply with ASTM C 1173, elastomeric, sleeve-type, reducing or transition coupling, for joining underground nonpressure piping. Include ends of same sizes as piping to be joined, and corrosion-resistant-metal tension band and tightening mechanism on each end.

B. Sleeve Materials:
   1. For Concrete Pipes: ASTM C 443, rubber.
   2. For Plastic Pipes: ASTM F 477, elastomeric seal or ASTM D 5926, PVC.
   3. For Dissimilar Pipes: ASTM D 5926, PVC or other material compatible with pipe materials being joined.

C. Unshielded, Flexible Couplings:
   1. Basis-of-Design Product: Subject to compliance with requirements, provide product indicated on Drawings or comparable product by one of the following:
      a. Dallas Specialty & Mfg. Co.
      b. Fernco Inc.
      c. Logan Clay Pipe.
      d. Mission Rubber Company; a division of MCP Industries, Inc.
      e. NDS Inc.
      f. Plastic Oddities; a division of Diverse Corporate Technologies, Inc.
   2. Description: Elastomeric sleeve with stainless-steel shear ring and corrosion-resistant-metal tension band and tightening mechanism on each end.

2.3 STORMWATER CHASES

A. Sidewalk chase shall be constructed as indicated on the project drawings.
   1. The sidewalk chase grates and frames shall be EJ Iron model V-7600 series or approve equal.

B. Roadway chases shall be constructed as indicated on the project drawings.
   1. The roadway chase grates and frames shall be EJ Iron model V-7320 series or approve equal.

2.4 CLEANOUTS

A. Cast-Iron Cleanouts:
   1. Manufacturers: Subject to compliance with requirements, available manufacturers offering products that may be incorporated into the Work include, but are not limited to, the following:
      a. Smith, Jay R. Mfg. Co.
      b. WADE
      c. Tyler Pipe.
      d. Watts Water Technologies, Inc.
      e. Zurn Specification Drainage Operation; Zurn Plumbing Products Group.
   2. Description: ASME A112.36.2M, round, gray-iron housing with clamping device and round, secured, scoriated, gray-iron cover. Include gray-iron ferrule with inside calk or spigot connection and countersunk, tapered-thread, brass closure plug.
   3. Top-Loading Classification(s): Heavy Duty.

2.5 MANHOLES

A. Standard Precast Concrete Manholes: See Section 330513 – Manholes and Structures

PART 3 - EXECUTION

3.1 EARTHWORK

A. Excavation, trenching, and backfilling are specified in Section 312000 "Earth Moving."

3.2 PIPING INSTALLATION

A. General Locations and Arrangements: Drawing plans and details indicate general location and arrangement of underground storm drainage piping. Location and arrangement of piping layout take into account design considerations. Install piping as indicated, to extent practical. Where specific installation is not indicated, follow piping manufacturer's written instructions.

B. Install piping beginning at low point, true to grades and alignment indicated with unbroken continuity of invert. Place bell ends of piping facing upstream. Install gaskets, seals, sleeves, and couplings according to manufacturer's written instructions for use of lubricants, cements, and other installation requirements.

C. Install manholes for changes in direction unless fittings are indicated. Use fittings for branch connections unless direct tap into existing sewer is indicated.

D. Install proper size increasers, reducers, and couplings where different sizes or materials of pipes and fittings are connected. Reducing size of piping in direction of flow is prohibited.

E. Install gravity-flow, non-pressure drainage piping according to the following:
   1. Install piping pitched down in direction of flow.
   2. Install piping with 36-inch minimum cover.
   3. Install PVC sewer piping according to ASTM D 2321 and ASTM F 1668.

3.3 PIPE JOINT CONSTRUCTION

A. Join gravity-flow, non-pressure drainage piping according to the following:
   1. Join PVC sewer piping according to ASTM D 2321 and ASTM D 3034 for elastomeric-seal joints or ASTM D 3034 for elastomeric-gasketed joints.
   2. Join dissimilar pipe materials with non-pressure-type flexible couplings.

3.4 CLEANOUT INSTALLATION

A. Install cleanouts and riser extensions from sewer pipes to cleanouts at grade. Use cast-iron soil pipe fittings in sewer pipes at branches for cleanouts, and use cast-iron soil pipe for riser extensions to cleanouts. Install piping so cleanouts open in direction of flow in sewer pipe.
   1. Use Light-Duty, top-loading classification cleanouts in earth or unpaved foot-traffic areas.
   2. Use Medium-Duty, top-loading classification cleanouts in paved foot-traffic areas.
   3. Use Heavy-Duty, top-loading classification cleanouts in vehicle-traffic service areas.
   4. Use Extra-Heavy-Duty, top-loading classification cleanouts in roads.

B. Set cleanout frames and covers in earth in cast-in-place-concrete block, 18 by 18 by 12 inches deep. Set with tops 1 inch above surrounding grade.

C. Set cleanout frames and covers in concrete pavement and roads with tops flush with pavement surface.

3.5 CONCRETE PLACEMENT

A. Place cast-in-place concrete according to ACI 318.

3.6 CONNECTIONS

A. Make connections to existing piping and underground manholes.
   1. Use commercially manufactured wye fittings for piping branch connections. Remove section of existing pipe; install wye fitting into existing piping; and encase entire wye fitting, plus 6-inch overlap, with not less than 6 inches of concrete with 28-day compressive strength of 3000 psi.
   2. Make branch connections from side into existing piping, NPS 4 to NPS 20. Remove section of existing pipe, install wye fitting into existing piping, and encase entire wye with not less than 6 inches of concrete with 28-day compressive strength of 3000 psi.
   3. Make branch connections from side into existing piping, NPS 21 or larger, or to underground manholes and structures by cutting into existing unit and creating an opening large enough to allow 3 inches of concrete to be packed around entering connection. Cut end of connection pipe passing through pipe or structure wall to conform to shape of and be flush with inside wall unless otherwise indicated. On outside of pipe, manhole, or structure wall, encase entering connection in 6 inches of concrete for minimum length of 12 inches to provide additional support of collar from connection to undisturbed ground.
      a. Use concrete that will attain a minimum 28-day compressive strength of 3000 psi unless otherwise indicated.
      b. Use epoxy-bonding compound as interface between new and existing concrete and piping materials.
   4. Protect existing piping, manholes, and structures to prevent concrete or debris from entering while making tap connections. Remove debris or other extraneous material that may accumulate.

B. Pipe couplings, expansion joints, and deflection fittings with pressure ratings at least equal to piping rating may be used in applications below unless otherwise indicated.
   1. Use non-pressure-type flexible couplings where required to join gravity-flow, non-pressure sewer piping unless otherwise indicated.
      a. Unshielded flexible couplings for same or minor difference OD pipes.

b. Unshielded, increaser/reducer-pattern, flexible couplings for pipes with different OD.
c. Ring-type flexible couplings for piping of different sizes where annular space between smaller piping's OD and larger piping's ID permits installation.

2. Use pressure-type pipe couplings for force-main joints.

3.7 IDENTIFICATION

A. Materials and their installation are specified in Section 312000 "Earth Moving." Arrange for installation of green warning tape directly over piping and at outside edge of underground structures.
1. Use warning tape or detectable warning tape over ferrous piping.
2. Use detectable warning tape over nonferrous piping and over edges of underground structures.

3.8 CLEANING

A. Clean interior of piping of dirt and superfluous materials. Flush with water.

END OF SECTION

SECTION 40 05 02 – PIPING AND EQUIPMENT IDENTIFICATION

PART 1 -- GENERAL

1.1 DESCRIPTION:

A. This section includes materials and installation of markers, labels, and signs for pipes and valves, for mechanical equipment, and for miscellaneous plant services.

1.2 RELATED WORK SPECIFIED ELSEWHERE:

A. Section 09 90 00 Painting and Coating

B. Section 09 97 00 Special Coatings

C. Section 40 11 09 Interior Piping

D. Section 41 11 11 Valves and Actuators

E. Section 43 11 33 Positive Displacement Blowers

F. Section 43 20 01 Inline Static Mixers

G. Section 43 23 01 High Service Pumps

H. Section 43 30 01 Submersible Pump and Jet Mixing System

I. 46 21 10 Packaged Water Treatment Plant Equipment

J. 46 33 13 Sodium Hypochlorite Generating Equipment

K. 46 33 44 Peristaltic Metering Pumps Skids

1.3 SUBMITTALS:

A. Submit manufacturer's catalog data and descriptive literature describing materials, colors, letter size, and size of labels.

B. Submit list of all pipe, valves, and equipment being supplied for this contract including proposed tag numbers following the system established in this Section.

PART 2 -- MATERIALS

2.1 LABELS FOR PIPING:

A. Vinyl Labels

1. Labels for piping shall bear the full piping system name as shown in the Piping Label Schedule. Provide separate flow directional arrows next to each label. Color, size, and labeling shall conform to ANSI A13.1 and Z53.1. Labels for piping shall be vinyl cloth: W.H. Brady Co. B-500 vinyl cloth, Seton Name Plate Corporation Pipe Markers, or equal.

2.2 PIPE LABEL SCHEDULE

LABEL TEXT	QUANTITY	Maximum Distance Between Labels (ft)
RAW WATER	1 Location	20
CLARIFIED WATER	3 Locations	20
DAF SKIMMER WASTE	3 Locations	20
DAF OVERFLOW WASTE	3 Locations	20
DAF SATURATOR INFLUENT	3 Locations	20
DAF SATURATOR EFFLUENT	3 Locations	20
SATURATOR CA	3 Locations	20
FILTERED WATER	9 Locations	20
FILTER TO WASTE	6 Locations	20
FILTER BACKWASH	6 Locations	20
FILTER SCOUR AIR	6 Locations	20
WASTEWATER	1 Location	20
FINISHED WATER	3 Locations	20
CHLORINE CONTACT OF	2 Locations	20
CLEARWELL OF	2 Locations	20
COAGULANT	1 Location	8
SODIUM HYDROXIDE	2 Locations	8
HYPOCHLORITE	2 Locations	8
ZINC ORTHOPHOSPHATE	1 Location	8
BRINE	1 Location	12
SOFTENED WATER	1 Location	12
H2 DILUTON AIR	2 Locations	12
OSHG VENT	2 Locations	12
- Any Not Listed -	-	8

2.3 LABELS FOR VALVES:

A. Provide each valve of size larger than 2” inches with an identification tag. Provide all process control valves (pressure and flow) with an identification tag, regardless of size. Tag shall be 2-inch-square or circular aluminum or 1/16-inch-thick fiberglass: W.H. Brady B-60, Seton Name Plate Corp. Series SVT, or equal. Aluminum tags shall have black-filled letters. Tag shall show the valve tag number and/or name or designation as given on the drawings.

2.4 LABELS FOR MECHANICAL EQUIPMENT:

A. Provide a label for each pump, tank, blower, compressor, reactor, or other piece of mechanical equipment. Label shall contain the equipment name and tag number. Lettering shall conform to OSHA requirements. Labels shall be 2-inches (minimum) by 4 inches (minimum) brass, aluminum, or 1/8-inch-thick fiberglass tags: Brady B-120, Fiber-Shelf, Seton Style G, or equal.

2.5 LABELS FOR SPECIALTY PIPING ITEMS

A. Provide a label for each injection quill and static mixer. Label shall contain the equipment name and tag number. Injection quill labels shall include chemical service. Lettering shall conform to OSHA requirements. Labels shall be 2-inches (minimum) by 4 inches (minimum) brass, aluminum, or 1/8-inch-thick fiberglass tags: Brady B-120, Fiber-Shelf, Seton Style G, or equal.

PART 3 -- EXECUTION

3.1 PIPE LABELS:

A. Provide label and flow arrow at each connection to pumps or other mechanical equipment, at wall boundaries, at tees and crosses and at 10-foot centers on straight runs of piping.

3.2 VALVE, EQUIPMENT, AND SPECIALTY PIPING LABELS:

A. Attach labels to the valve or piece of equipment with Type 316 stainless-steel chains or wires.

B. Attach valve labels to the valve handwheels. If the valve has no handwheel, attach the label to the valve by tying the tag wire or chain around the operating shaft or nut.

C. Attach injection quill labels by tying the tag wire or chain around the operating shaft of the injection quill ball valve.

3.3 TAG LIST:

A. The drawings establish the protocol for tag numbers. The CONTRACTOR and/or Process Equipment Suppliers shall maintain an up-to-date tag list, using the established protocol, to reflect any changes made during the detail design of process equipment and/or system. The final tag list shall be included in the O&M Manual.

END OF SECTION

SECTION 40 05 06 – COUPLINGS, ADAPTERS, AND SPECIALS FOR PROCESS PIPING

PART 1 GENERAL

1.01 SECTION INCLUDES

A. Pipe penetrations.

B. Flexible connections.

C. Expansion joints.

1.02 RELATED REQUIREMENTS

A. Section 05 50 00 - Metal Fabrications: Miscellaneous metalwork and fasteners as required by this Section.

B. Section 07 84 00 - Firestopping: Penetrations through fire-rated materials.

C. Section 07 90 00 - Joint Protection: Sleeve sealant for pipe penetrations.

D. Section 09 90 00 - Painting and Coating: Product and execution requirements for painting specified by this Section.

E. Section 40 05 07 - Hangers and Supports for Process Piping: Hangers, anchors, sleeves, and sealing of piping to adjacent structures.

F. Section 40 05 23 - Stainless Steel Process Pipe and Tubing: Stainless steel piping materials and appurtenances.

G. Section 40 05 24 - Steel Process Pipe: Steel piping materials and appurtenances.

1.03 DEFINITIONS

A. FM: Factory Mutual Insurance Company; FM Global is the communicative name of the company.

B. WH: Warnock Hersey; indicates compliance to relevant building codes, association criteria, and product safety and performance standards.

1.04 REFERENCE STANDARDS

A. American Water Works Association:
   1. AWWA C219 - Bolted, Sleeve-Type Couplings for Plain-End Pipe.

B. American Welding Society:
   1. AWS D1.1/D1.1M - Structural Welding Code - Steel.

C. ASME International:
   1. ASME A13.1 - Scheme for the Identification of Piping Systems.
   2. ASME B31.3 - Process Piping.

3. ASME Boiler and Pressure Vessel Code (BPVC), Section IX - Welding, Brazing, and Fusing Qualifications.

D. ASTM International:
1. ASTM D2000 - Standard Classification System for Rubber Products in Automotive Applications.
2. ASTM E84 - Standard Test Method for Surface Burning Characteristics of Building Materials.
3. ASTM E119 - Standard Test Methods for Fire Tests of Building Construction and Materials.
4. ASTM E814 - Standard Test Method for Fire Tests of Penetration Firestop Systems.
5. ASTM E1966 - Standard Test Method for Fire-Resistive Joint Systems.

E. Expansion Joint Manufacturers Association, Inc.:
1. EJMA Standards.

F. NSF International:
1. NSF 61 - Drinking Water System Components - Health Effects.
2. NSF 372 - Drinking Water System Components - Lead Content.

G. UL:
1. UL 263 - Fire Tests of Building Construction and Materials.
2. UL 1479 - Fire Tests of Through-Penetration Firestops.
3. UL 2079 - Tests for Fire Resistance of Building Joint Systems.

1.05 SUBMITTALS

A. Section 01 33 00 - Submittal Procedures: Requirements for submittals.

B. Product Data:
1. Submit manufacturer catalog information for each specified product.
2. Flexible Pipe Connectors: Indicate maximum temperature and pressure rating, face-to-face length, live length, hose wall thickness, hose convolutions per foot and per assembly, fundamental frequency of assembly, braid structure, and total number of wires in braid.
3. Expansion Joints: Indicate maximum temperature, pressure rating, and expansion compensation.

C. Shop Drawings:
1. Identification:
a. Submit list of wording, symbols, letter size, and color coding for pipe identification.
b. Comply with ASME A13.1.
2. Indicate restrained joint details and materials.
3. Submit layout drawings showing piece numbers and location, indicating restrained joint locations.
4. Indicate layout of piping systems, including flexible connectors, expansion joints and compensators, loops, offsets, and swing joints.

D. Manufacturer's Certificate: Certify that products meet or exceed specified requirements.

E. Welder Certificates: Certify welders and welding procedures employed on Work, verifying AWS and/or ASME qualification within previous 12 months.

F. Delegated Design Submittals: Submit signed and sealed Shop Drawings with design calculations and assumptions for:
   1. Flexible connectors.
   2. Expansion joints.
   3. Pipe Restraints:
      a. Determine restrained lengths and submit joint restraint details.
      b. Use joint restraint devices specifically designed for applications as described in manufacturer data.

G. Manufacturer Instructions: Submit special procedures and setting dimensions.

H. Source Quality-Control Submittals: Indicate results of shop and/or factory tests and inspections.

I. Field Quality-Control Submittals: Indicate results of Contractor-furnished tests and inspections.

J. Qualifications Statements:
   1. Submit qualifications for manufacturer, installer, and licensed professional.
   2. Submit manufacturer's approval of installer.
   3. Welders: Qualify procedures and personnel according to ASME BPVC-IX and/or AWS D1.1/D1.1M.

1.06 CLOSEOUT SUBMITTALS

A. Section 01 77 00 - Closeout Procedures: Requirements for submittals.

B. Project Record Documents: Record actual locations of piping appurtenances.

C. Identify and describe unexpected variations to pipe routing or discovery of uncharted utilities.

1.07 QUALITY ASSURANCE

A. Materials in Contact with Potable Water: Certified to NSF Standards 61 and 372.

B. Perform Work according to ASME B31.9 for installation of piping systems and according to ASME BPVC-IX or AWS D1.1/D1.1M for welding materials and procedures.

C. Surface-Burning Characteristics: Maximum 25/450 flame-spread/smoke-developed index when tested according to ASTM E84.

D. Perform Work according to State of Alaska and City and Borough of Wrangell standards.

1.08 QUALIFICATIONS

A. Manufacturer: Company specializing in manufacturing products specified in this Section with minimum five years' documented experience.

B. Installer: Company specializing in performing Work of this Section with minimum three years' documented experience and approved by manufacturer.

C. Welders: AWS or ASME qualified within previous 12 months for employed weld types.

D. Licensed Professional: Professional engineer experienced in design of specified Work and licensed in State of Alaska.

1.09 DELIVERY, STORAGE, AND HANDLING

A. Inspection: Accept materials on Site in manufacturer's original packaging and inspect for damage.

B. Store materials according to manufacturer instructions.

C. Protection:
   1. Protect materials from moisture and dust by storing in clean, dry location remote from construction operations areas.
   2. Furnish temporary end caps and closures on piping and fittings and maintain in place until installation.
   3. Provide additional protection according to manufacturer instructions.

1.10 EXISTING CONDITIONS

A. Field Measurements:
   1. Verify field measurements prior to fabrication.
   2. Indicate field measurements on Drawings.

1.11 WARRANTY

A. Section 01 77 00 - Closeout Procedures: Requirements for warranties.

B. Furnish manufacturer's warranty for minimum one year from commissioning.

PART 2 PRODUCTS

2.01 PIPELINE PENETRATIONS

A. Mechanical Sleeve Seals:
   1. Manufacturers:
      a. Victaulic, Inc.
      b. Or approved equal.
   2. Description:
      a. Modular mechanical type, consisting of interlocking synthetic rubber links shaped to continuously fill annular space between object and sleeve.
      b. Connection: Bolts and pressure plates causing rubber sealing elements to expand when tightened, providing watertight seal and electrical insulation.

2.02 FLEXIBLE CONNECTIONS

A. Manufacturers:
   1. Victaulic, Inc.

2. Or approved equal.

B. Stainless Steel Piping:
1. Inner Hose: Stainless steel.
2. Exterior Sleeve: Stainless steel.
3. Pressure Rating: 250 PSIG at 250°F (121°C).
4. Joints: Flanged.
5. Size: 2” or 8” (50 mm or 200 mm).
6. Maximum Offset: 3/4” (19 mm) on each side of installed center line.

2.03 EXPANSION JOINTS

A. Manufacturers:
1. Victaulic, Inc.
2. Or approved equal.

B. Performance and Design Criteria:
1. Bellow Design: According to Section C of EJMA Standards.

C. Stainless-Steel Bellows Type:
1. Pressure Rating: 250 PSIG at 250°F (121°C).
2. Maximum Compression: 1.75” (44 mm).
3. Maximum Extension: 1/4” (6 mm)
4. Joint: Flanged.
5. Size: 2” (50 mm).
6. Application: Stainless Steel piping 2” (50 mm) and smaller.

D. External Ring-Controlled Stainless-Steel Bellows Type:
1. Pressure Rating: 250 PSIG at 250°F (121°C).
2. Maximum Compression: 1-1/4” (32 mm)
3. Maximum Extension: 5/16” (8 mm)
4. Maximum Offset: 1/8” (3 mm)
5. Joint: Flanged.
6. Size: 8” (200 mm)
7. Application: Stainless Steel piping larger than 2” (75 mm).

2.04 INSULATION

A. As indicated on Drawings.

2.05 FINISHES

A. Prepare piping appurtenances for field finishes as specified in Section 09 90 00.

2.06 SOURCE QUALITY CONTROL

A. Section 01 45 00 - Quality Control: Requirements for testing, inspection, and analysis.
1. Provide shop inspection and testing of completed assemblies.

B. Owner Inspection:

1. Make completed assemblies available for inspection at manufacturer's factory prior to packaging for shipment.
2. Notify Owner at least Seven days before inspection is allowed.

C. Owner Witnessing:
1. Allow witnessing of factory inspections and test at manufacturer's test facility.
2. Notify Owner at least seven days before inspections and tests are scheduled.

D. Certificate of Compliance:
1. If manufacturer is approved by authorities having jurisdiction, submit certificate of compliance indicating Work performed at manufacturer's facility conforms to Contract Documents.
2. Specified shop tests are not required for Work performed by approved manufacturer.

PART 3 EXECUTION

3.01 EXAMINATION

A. Section 01 77 00 - Closeout Procedures: Requirements for installation examination.

B. Verify that field dimensions are as indicated on Drawings.

C. Inspect existing flanges for nonstandard bolthole configurations or design and verify that new pipe and flanges mate properly.

D. Verify that openings are ready to receive sleeves and firestopping.

E. Verify that pipe outside diameter conforms to sleeve manufacturer's requirements.

3.02 PREPARATION

A. Section 01 77 00 - Closeout Procedures: Requirements for installation preparation.

B. Cleaning: Thoroughly clean end connections before installation.

C. Close pipe and equipment openings with caps or plugs during installation.

D. Surface Preparation: Clean surfaces to remove foreign substances.

3.03 INSTALLATION

A. According to ASME B31.3.

B. Coating: Finish piping appurtenances as specified in Section 09 90 00 - Painting and Coating for service conditions.

C. Pipe Penetrations:
1. Sleeves:
a. Exterior Watertight Entries: Seal with mechanical sleeve seals.
b. Set sleeves in position in forms and provide reinforcement around sleeves.
c. Size sleeves large enough to allow for movement due to expansion and contraction and provide for continuous insulation wrapping.

d. Extend sleeves through floors 0.5” (13 mm) above finished floor level and calk sleeves.
e. Where piping penetrates floor, ceiling, or wall, close off space between pipe and adjacent Work with insulation and calk airtight.
f. Provide close-fitting metal collar or escutcheon covers at both sides of penetration.
g. Install escutcheons at finished surfaces.

D. Flexible Connections: Install flexible couplings at connections to equipment and where indicated on Drawings.

E. Expansion Joints:
1. Install flexible couplings and expansion joints at connections to equipment and where indicated on Drawings.
2. If expansion joint is supplied with internal sleeve, indicate flow direction on outside of joint.

F. Insulation: As indicated on Drawings.

G. Disinfection: Disinfect potable water piping as specified in Section 331300 - Disinfecting of Water Utility Distribution.

3.04 FIELD QUALITY CONTROL

A. Section 01 45 00 - Quality Control: Requirements for inspecting and testing.

B. After installation, inspect for proper supports and interferences.

C. Repair damaged coatings with material equal to original coating.

3.05 CLEANING

A. Section 01 77 00 - Closeout Procedures: Requirements for cleaning.

B. Keep equipment interior clean as installation progresses.

END OF SECTION

SECTION 40 05 07 – HANGERS AND SUPPORTS FOR PROCESS PIPING

PART 1 -- GENERAL

1.1 DESCRIPTION

A. SCOPE: The work covered by this section includes furnishing and installation of pipe and equipment hangers, supports, and accessories necessary to complete the work.

1.2 RELATED SECTIONS

1. Section 03 30 00 - Cast-in-Place Concrete
2. Section 09 90 00 - Painting and Coating
3. Section 40 05 23 - Stainless Steel Process Pipe and Tubing
4. Section 40 05 23-43 - Stainless Steel Pipe, Fittings, and Accessories for Low Pressure Air Service
5. Section 40 05 31 - PVC Pipe
6. Section 40 05 19 - Ductile Iron Pipe

1.3 REFERENCE SPECIFICATIONS, CODES, AND STANDARDS

A. Manufacturer’s Standardization Society (MSS) SP-58 Pipe Hangers and Supports - Materials, Design, Manufacture, Selection, Application and Installation

1.4 SUBMITTALS

A. Action Submittals: Submit the following:
   1. Shop Drawings:
      a. Detailed drawings showing all hangers and supports for each piping system specified.

   2. Product Data:
      a. Submit manufacturers' catalogs, literature, and engineering data on all hangers and supports.

PART 2 -- PRODUCTS

2.1 GENERAL REQUIREMENTS

A. Piping systems and pipe connections to equipment shall be properly anchored and supported in order to prevent undue deflection, vibration, and dislocation due to seismic events, line pressures, pipe weight, fluid weight, liquid movement, thermal changes, vibration, probable forces applied during construction, and stresses on piping, equipment, and structures.

B. Standard and fabricated hangers and supports shall be furnished complete with necessary inserts, bolts, nuts, rods, washers, and other accessories.

2.2 SUPPORT LOCATIONS

A. Where locations are not specifically identified in the drawings, pipe supports shall be placed according to the following guidelines.
   1. Generally, run piping in groups where practicable and parallel to building wall. Provide minimum clearance of 1-inch between pipe and other work.
   2. Install hangers or supports at all locations where pipe changes direction.

3. All hangers and supports shall be capable of vertical adjustment after placement of piping.
4. Different types of hangers or supports shall be kept to a minimum.
5. All suspended or supported ductile iron pipe shall have a hanger or support adjacent to each hub.
6. Support vertical piping at each floor and between floors by stays or braces to prevent rattling and vibration.
7. Hanger rods shall be straight and vertical. Chain, wire, strap or perforated bar hangers shall not be used. Hangers shall not be suspended from piping.

2.3 SUPPORT SPACING

A. Maximum support spacing unless otherwise shown or approved

Pipe Size (inches)	Maximum Pipe Span [1] (feet)			
	Steel	Copper	Plastic [2]	Cast/Ductile Iron
3/8 to 3/4	5	6	Cont. [3]	-
1	6	6	5	-
1-1/4	6	6	5	-
1-1/2	6	6	5	-
2	10	10	5	-
2-1/2	10	10	5	-
3	10	10	5	
4	12	12	5	12 feet for pressure pipe
6	12	12	5	
8	12	12	5	
10	12	-	5	
12	12	-	10	10 feet for Soil/drainage pipe
14	12	-	-	
16	12	-	-	
18	12	-	-	
20	12	-	-	
24 and larger	12	-	-	

[1]Pipe shall not have pockets formed in the span due to sagging of the pipe between supports caused by the weight of the pipe, medium in the pipe, insulation, valves and fittings.

[2]Span shown is for Schedule 80 CPVC pipe at 100°F. Spans for other plastics, other CPVC pipe Schedules and pipes at higher temperatures shall be shortened in accordance with the pipe manufacturer's recommendations.

[3]Continuous means pipe shall be in unistrut or similar channel.

2.4 CONCRETE ANCHORS

A. Unless otherwise indicated, concrete anchors for pipe supports shall be according to the following table; consult the ENGINEER for any anchor applications not appearing on the table.

Pipe Support Application	Type of Concrete Anchor
New Concrete	Use embedded concrete insert anchors on a grid pattern. Use Grinnell (Anvil International), Tolco, or equal.
Existing Concrete	Use non-shrink grouted anchors, metallic type expansion anchors, or epoxy anchors. Exceptions: Metallic type expansion anchors and epoxy anchors are not permitted for pipe supports subject to vibrating loads. Epoxy anchors are not permitted where the concrete temperature is in excess of 100 deg F or higher than the limiting temperature recommended by the manufacturer. Epoxy anchors are not accepted where anchors are subject to vibration or fire.
Vibratory Loads and High-Temperature Conditions	Use non-shrink grouted anchors

2.5 HANGERS AND SUPPORTS

A. Hangers and supports where shown shall be in accordance with detail drawings.

B. Hangers and supports not shown shall be in accordance with MSS SP 58.

C. Manufacturers

1. Anvil International
2. TOLCO
3. Pipe Support Group (Bergen)
4. Unistrut Corporation
5. Or equal

2.6 THREADED STEEL RODS:

A. Two inch vertical adjustment with two nuts each end for positioning and locking.

B. Size hanger rods according to the schedule below, unless otherwise noted:

Nominal Pipe (Inches)	Rod Diameter (Inches)
2 and less	3/8
2-1/2 to 3-1/2	1/2
4	5/8
6	3/4
8 through 12	7/8
14 through 18	1
20 through 30	1-1/4

2.7 COATING & CORROSION PROTECTION

A. Galvanizing
   1. Unless otherwise indicated, fabricated pipe supports other than stainless steel or non-ferrous supports shall be blast-cleaned after fabrication and hot-dip galvanized in accordance with ASTM A 123 - Zinc (Hot-Dip Galvanized) Coatings on Iron and Steel Products.

B. Stainless Steel
   1. Use Type 304 stainless steel supports, rods, anchor bolts and fasteners shall be as indicated in the drawings and inside tanks subject to high humidity, water spray or submergence.
      a. Stainless steel required inside SBR tanks, post equalization tank and digester tanks.

PART 3 -- PRODUCTS

3.1 INSTALLATION

A. General
   1. Pipe supports, hangers, brackets, anchors, guides, and inserts shall be fabricated and installed in accordance with the manufacturer's printed instructions.
   2. Concrete inserts for pipe hangers and supports shall be coordinated with the formwork.

B. Appearance
   1. Pipe supports and hangers shall be positioned in order to produce an orderly, neat piping system.
   2. Hanger rods shall be vertical, without offsets.
   3. Hangers shall be adjusted to line up groups of pipes at the proper grade for drainage and venting, as close to ceilings or roofs as possible, and without interference with other WORK.

C. Fabrication
   1. Quality Control
      a. Pipe hangers and supports shall be fabricated and installed by experienced welders and fitters, using the best welding procedures available.
      b. Fabricated supports shall be neat in appearance without sharp corners, burrs, or edges.

END OF SECTION

SECTION 40 05 23 - STAINLESS STEEL PROCESS PIPE

PART 1 - GENERAL

1.1 SUMMARY

A. Section Includes:

1. Stainless-steel pipe and fittings.
2. Stainless-steel tube and fittings.
3. Accessories.

B. Related Requirements:

1. Section 33 01 10 - Disinfecting of Water Utility Piping Systems
2. Section 40 05 06 - Couplings, Adaptors, and Specials for Process Piping
3. Section 40 05 07 - Hangers and Supports for Process Piping
4. Section 40 11 11 – Valves and Actuators

1.2 REFERENCE STANDARDS

A. American Welding Society:

1. AWS D1.1/D1.1M - Structural Welding Code - Steel.

B. ASME International:

1. ASME B1.20.1 - Pipe Threads, General Purpose, Inch.
2. ASME B1.20.2.M - Pipe Threads, 60 deg. General Purpose (Metric).
3. ASME B16.1 - Cast Iron Pipe Flanges and Flanged Fittings, Classes 25, 125, 250 and 800.
4. ASME B16.5 - Pipe Flanges and Flanged Fittings: NPS 1/2 through NPS 24 Metric/Inch Standard.
5. ASME B16.9 - Factory-Made Wrought Buttwelding Fittings.
6. ASME B16.11 - Forged Fittings, Socket-Welding and Threaded.
7. ASME B16.20 - Metallic Gaskets for Pipe Flanges: Ring-Joint, Spiral-Wound, and Jacketed.
8. ASME B16.21 - Nonmetallic Flat Gaskets for Pipe Flanges.
9. ASME B31.3 - Process Piping.
10. ASME Boiler and Pressure Vessel Code (BPVC), Section IX - Welding and Brazing Qualifications.

C. ASTM International:

1. ASTM A182/A182M - Standard Specification for Forged or Rolled Alloy and Stainless Steel Pipe Flanges, Forged Fittings, and Valves and Parts for High-Temperature Service.
2. ASTM A193/A193M - Standard Specification for Alloy-Steel and Stainless Steel Bolting for High Temperature or High Pressure Service and Other Special Purpose Applications.
3. ASTM A194/A194M - Standard Specification for Carbon Steel, Alloy Steel, and Stainless Steel Nuts for Bolts for High Pressure or High Temperature Service, or Both.
4. ASTM A269/A269M - Standard Specification for Seamless and Welded Austenitic Stainless Steel Tubing for General Service.
5. ASTM A312/A312M - Standard Specification for Seamless, Welded, and Heavily Cold Worked Austenitic Stainless Steel Pipes.
6. ASTM A351/A351M - Standard Specification for Castings, Austenitic, for Pressure-Containing Parts.

7. ASTM A403/A403M - Standard Specification for Wrought Austenitic Stainless Steel Piping Fittings.
8. ASTM A479/A479M - Standard Specification for Stainless Steel Bars and Shapes for Use in Boilers and Other Pressure Vessels.
9. ASTM A632 - Standard Specification for Seamless and Welded Austenitic Stainless Steel Tubing (Small Diameter) for General Service.
10. ASTM A789/A789M - Standard Specification for Seamless and Welded Ferritic/Austenitic Stainless Steel Tubing for General Service.
11. ASTM A813/A813M - Standard Specification for Single- or Double-Welded Austenitic Stainless Steel Pipe.
12. ASTM A814/A814M - Standard Specification for Cold-Worked Welded Austenitic Stainless Steel Pipe.
13. ASTM D3308 - Standard Specification for PTFE Resin Skived Tape.

D. NSF International:

1. NSF 61 - Drinking Water System Components - Health Effects.
2. NSF 372 - Drinking Water System Components - Lead Content.

1.3 COORDINATION

A. Coordinate Work of this Section with piping and equipment connections as specified in other Sections and as indicated on Drawings.

1.4 SUBMITTALS

A. Section 01 33 00 - Submittal Procedures: Requirements for submittals.

B. Product Data: Submit manufacturer information on pipe materials and fittings.

C. Shop Drawings: Indicate layout of piping systems, including equipment, critical dimensions, sizes, and materials lists.

D. Manufacturer's Certificate: Certify that products meet or exceed specified requirements.

E. Welder Certificates: Submit welders' certification of compliance with ASME BPVC, Section IX or AWS D1.1, verifying qualification within previous 12 months.

F. Delegated Design Submittals: Submit signed and sealed Shop Drawings with piping layout, with design calculations and assumptions for pipe sizing methods.

G. Source Quality-Control Submittals: Indicate results of shop or factory tests and inspections.

H. Field Quality-Control Submittals: Indicate results of Contractor-furnished tests and inspections.

I. Qualifications Statements:
1. Submit qualifications for manufacturer, installer, and licensed professional.
2. Submit manufacturer's approval of installer.

1.5 CLOSEOUT SUBMITTALS

A. Section 013300 – Submittal Procedures.

B. Project Record Documents: Record actual locations of valves, fittings, and appurtenances.

1.6 QUALITY ASSURANCE

A. Permanently mark each length of pipe with manufacturer's name or trademark, and compliance with standards.

B. Materials in Contact with Potable Water: Certified according to NSF 61 and NSF 372.

C. Perform Work according to ASTM and ASME standards.

1.7 QUALIFICATIONS

A. Manufacturer: Company specializing in manufacturing products specified in this Section with minimum three years' documented experience.

B. Welders: ASME qualified within previous 12 months for employed weld types.

1.8 DELIVERY, STORAGE, AND HANDLING

A. Section 01 60 00 - Product Requirements: Requirements for transporting, handling, storing, and protecting products.

B. Inspection: Accept materials on Site in manufacturer's original packaging and inspect for damage.

C. Store materials according to manufacturer instructions.

D. Protection:
   1. Protect materials from moisture and dust by storing in clean, dry location remote from construction operations areas.
   2. Protect piping and appurtenances by storing off ground.
   3. Provide additional protection according to manufacturer instructions.

1.9 AMBIENT CONDITIONS

A. Minimum Conditions: Do not store or handle uninstalled lined pipes or fittings at temperatures below zero degrees F (minus 18 degrees C).

1.10 EXISTING CONDITIONS

A. Field Measurements:
   1. Verify field measurements prior to fabrication.
   2. Indicate field measurements on Shop Drawings.

PART 2 - PRODUCTS

2.1 STAINLESS-STEEL PIPE AND FITTINGS

A. General Service Piping:
   1. Type:
      a. Welded or Seamless; comply with ASTM A813.
      b. Class: SW; comply with ASTM A814.
   2. Schedule: As indicated on Drawings.
   3. Grade: Type 304.
   4. Dimensions: Comply with ASTM A312.

B. Fittings:

1. Type:
    a. Piping 2 Inches and Smaller: Socket welding.
    b. Piping 2-1/2 Inches and Larger: Butt welding.

2. Dimensions: Comply with ASTM A312.
3. Threaded Fittings:
    a. Comply with ASME B16.11 and ASTM A182.
    b. Grade: Type 304.
    c. Threads: Comply with ASME B1.20.1.
4. Butt-Welding Fittings:
    a. Comply with ASTM A403/A403M.
    b. Grade: Type 304.
    c. Class: CR; comply with ASME B16.9.

5. Socket-Welding Fittings:
    a. Comply with ASTM A403.
    b. Grade: Type 304.
    c. Class: WP-S; comply with ASME B16.11.

6. Flanged Fittings:
    a. Type: Welding neck, Socket welding, or Threaded.
    b. Class: 150.
    c. Comply with ASTM A182.
    d. Grade: Type 304.
    e. Facing and Drilling: Comply with ASME B16.5, flat or raised face as required to match equipment, valves, or instruments.
    f. Backing Flanges:

        1) Material: Stainless steel.
        2) Class: 150.
        3) Comply with ASTM A351.
        4) Grade: Type 304.
        5) Type: Van stone.
        6) Drilling: Comply with ASME **B16.1**.

7. Flanged Connections: As required to connect stainless-steel piping to fittings and equipment or as indicated on the Drawings.
8. Grooved End: Stainless steel conforming to ASTM A-403, WPW, WPW/S9, or CR/S9, or shall be fabricated from stainless steel pipe conforming to ASTM A312, with factory grooved ends. Fittings shall be type 304/304L or 316/316L stainless steel.
    a. Couplings: Rigid type; Victaulic Style 89 (ductile iron housings) or Style 489 (stainless steel housings). Flexible couplings Victaulic Style 77S and 77DX or approved equals.

2.2 ACCESSORIES

A. Pipe-Thread Tape:
    1. Material: PTFE.
    2. Comply with ASTM D3308.

B. O-Ring Seals: Rubber or EPDM.

C. Flange Gaskets:
    1. Comply with ASME B16.5.

2. Nonmetallic Gaskets:
   a. Material: PTFE.
   b. Comply with ASME B16.21.
3. Type:
   a. Raised-Face Flanges: Full face.
   b. Flat-Face Flanges: Full face.

2.3 SOURCE QUALITY CONTROL

A. Provide shop inspection and testing of completed assemblies and field pressure testing of field fitted assembly.

B. Owner Inspection:
   1. Make completed piping components available for inspection at manufacturer's factory prior to packaging for shipment.
   2. Notify Owner at least seven days before inspection is allowed.

C. Owner Witnessing:
   1. Allow witnessing of factory inspections and test at manufacturer's test facility.
   2. Notify Owner at least seven days before inspections and tests are scheduled.

D. Certificate of Compliance:
   1. If manufacturer is approved by authorities having jurisdiction, submit certificate of compliance indicating Work performed at manufacturer's facility conforms to Contract Documents.
   2. Specified shop tests are not required for Work performed by approved manufacturer.

PART 3 - EXECUTION

3.1 EXAMINATION

A. Section 01 77 00 - Closeout Requirements: Requirements for installation examination.

B. Verify that field dimensions are as indicated on Shop Drawings.

C. Inspect existing flanges for nonstandard bolt hole configurations or design and verify that new pipe and flange mate properly.

3.2 PREPARATION

A. Section 017000 - Execution and Closeout Requirements: Requirements for installation preparation.

B. Ream pipe ends and remove burrs.

C. Bevel plain-end pipe**.**

D. Thoroughly clean pipe and fittings before installation.

3.3 INSTALLATION

A. Comply with ASME B31.3.

B. Run piping straight along alignment as indicated on Shop Drawings, with minimum number of joints.

C. Fittings:
   1. Clean gasket seats thoroughly, and wipe gaskets clean prior to installation.
   2. Install according to manufacturer instructions.
   3. Bolting:
      a. Tighten bolts progressively, drawing up bolts on opposite sides until bolts are uniformly tight.
      b. Use torque wrench to tighten bolts to manufacturer instructions.

D. Provide required upstream and downstream clearances from devices as indicated on [**Shop**] Drawings.

E. Install piping with sufficient slopes for venting or drainage of liquids and condensate to low points.

F. Support exposed piping as specified in Section 400507 - Hangers and Supports for Process Piping.

G. Provide expansion joints as specified in Section 400506 - Couplings, Adaptors, and Specials for Process Piping, and pipe guides as specified in Section 400507 - Hangers and Supports for Process Piping, to compensate for pipe expansion due to temperature differences.

H. Disinfection: Disinfect potable-water piping as specified in Section 33 01 10 - Disinfecting of Water Utility Piping Systems.

I. Dielectric Fittings: Provide between dissimilar metals.

J. Field Cuts: According to pipe manufacturer instructions.

K. Field welding of stainless steel is not permitted.

L. Installation Standards: Install Work according to referenced standards.

3.4 TOLERANCES

A. Piping Laying Tolerance: 5/8.

3.5 FIELD QUALITY CONTROL

A. Inspection:
   1. Inspect for damage to piping or tubing that may be detrimental as determined by the Architect/Engineer.
   2. Repair damaged piping, or provide new, undamaged pipe.
   3. After installation, inspect for required supports and anchoring, interferences, and damage to pipe, tube, or fittings.

B. Pressure Testing:
   1. Test per specification Section 33 05 05 – Hydrostatic Testing.

C. Replace pipe or fittings with mortar cracks wider than 1/16 inch.

3.6 CLEANING

A. Section 01 77 00 - Execution and Closeout Requirements: Requirements for cleaning.

B. Keep pipe interior clean as installation progresses.

C. After installation, clean pipe interior of soil, grit, and other debris.

END OF SECTION

SECTION 40 05 23-43 – STAINLESS STEEL PIPE, FITTINGS, AND ACCESSORIES FOR LOW PRESSURE AIR SERVICE

PART 1 GENERAL

1.01 DESCRIPTION

A. Scope
   1. Contractor shall provide all labor, materials, equipment and incidentals as shown, specified and required to furnish and install stainless steel pipe and fittings.
   2. Extent of piping shall be as shown and in piping schedules included in and Section 40 11 09 and as shown on Drawings.

B. Coordination: Review installation procedures under this and other Sections and coordinate installation of items that must be installed with, or before stainless steel pipe, fittings and accessories Work.

1.02 RELATED REQUIREMENTS

A. Section 09 90 00 - Painting and Coating.
B. Division 40 - Mechanical.

1.03 REFERENCES

A. Standards referenced in this Section are listed below:
   1. ANSI B2.1, USAS Pipe Threads.
   2. ANSI B16.1, Cast-Iron Pipe Flanges and Flanged Fittings.
   3. ANSI B16.11 Forged Fittings, Socket Welding and Threaded.
   4. ANSI B36.19, Stainless Steel Pipe. (ASME B36.19M).
   5. ASTM A182/A182M, Specification for Forged or Rolled Alloy and Stainless Steel Pipe Flanges, Forged Fittings, and Valves and Parts for High-Temperature Service.
   6. ASTM A193/A193M, Specification for Alloy-Steel and Stainless Steel Bolting Materials for High-Temperature Service.
   7. ASTM A194/A194M, Specification for Carbon and Alloy Steel Nuts for Bolts for High-Pressure and High-Temperature Service, or Both.
   8. ASTM A276, Specification for Stainless Steel Bars and Shapes.
   9. ASTM A312/A312M, Specification for Seamless and Welded Austenitic Stainless Steel Pipes.
   10. ASTM A320/A320M, Specification for Alloy-Steel and Stainless Steel Bolting Materials for Low-Temperature Service.
   11. ASTM A403/A403M, Specification for Wrought Austenitic Stainless Steel Piping Fittings.
   12. ASTM A409/A409M, Specification for Welded Large Diameter Austenitic Steel Pipe for Corrosive or High-Temperature Service.
   13. ASTM A480/A480M, Specification for General Requirements for Flat-Rolled Stainless and Heat-Resisting Steel Plate, Sheet and Strip.
   14. ASTM A774/A774M, Specification for As-Welded Wrought Austenitic Stainless Steel Fittings for General Corrosive Service at Low and Moderate Temperatures.
   15. ASTM A778, Specification for Welded, Unannealed Austenitic Stainless Steel Tubular Products.
   16. ASTM A380, Practice for Cleaning, Descaling and Passivation of Stainless Steel Parts, Equipment, and Systems.

17. ASTM A530/A530M, Specification for General Requirements for Specialized Carbon and Alloy Steel Pipe.
18. AWS D1.1/D1.1M, Structural Welding Code-Steel.
19. ASME B31.3, Process Piping.
20. ASNT-TC-1A, Recommended Practice for Non-destructive Testing Personnel Qualification and Certification.
21. AWWA C207, Steel Pipe Flanges for Waterworks Service Sizes 4-inch through 144-inch.
22. AWWA C208, Dimensions for Fabricated Steel Water Pipe Fittings.
23. AWWA M11, Steel Pipe - A Guide for Design and Installation.
24. Standards of the Expansion Joint Manufacturers Association, Inc.

1.04 SUBMITTALS

A. Shop Drawings: Submit the following:
   1. Detailed drawings and data on pipe, fittings, gaskets and appurtenances. Submit these with Shop Drawings as required under Section 40 11 09.
   2. Submit laying schedules and detailed plan and profile drawings for all stainless steel piping showing full details of piping, hangers, supports, restraints, couplings, accessories, and specials.
   3. Test Procedures: Submit description of proposed testing methods, procedures, and equipment
   4. Test Reports: Submit copies of test reports for each test. Refer to pipe testing requirements specified herein

B. Certificates: Submit certificates of compliance with Referenced Standards. Submit certificates of elastomers used for gaskets.

1.05 QUALITY ASSURANCE

A. Manufacturer's Qualifications:
   1. Manufacturer shall have a minimum of five years experience in production of stainless steel pipe, fittings and accessories, and shall show evidence of satisfactory service in at least five installations.
   2. Stainless steel pipe, fittings and accessories shall be product of one manufacturer.

B. Component Supply and Compatibility:
   1. Obtain all equipment included in this Section regardless of component manufacturer from a single stainless steel pipe, fittings, and accessories manufacturer.
   2. Stainless steel pipe, fittings, and accessories manufacturer to review and approve or to prepare all Shop Drawings and other submittals for all components furnished under this Section.
   3. All components shall be specifically constructed for the specified service conditions and shall be integrated into the overall assembly by the stainless steel pipe, fittings and accessories manufacturer.

1.06 DELIVERY, STORAGE, AND HANDLING

A. Protect all stainless steel pipe, fittings and other items from contamination during shipment and storage.

B. Protect all pipe and fittings to maintain dimensional tolerances and from any physical damage including dents and kinks.

C. Store products on heavy wood blocking or platforms in accordance with the manufacturer's recommendations. Do not store on the ground. Maintain the interiors of products free from dirt and foreign matter.

D. Inspect delivered pipe for cracked, gouged, chipped, dented or other damaged material and immediately remove from Site.

E. Refer to Section 40 11 09 for additional requirements.

PART 2 PRODUCTS

2.01 MATERIALS

A. Stainless Steel Pipe and Fittings:
   1. Manufacturers:
      a. Victaulic
      b. Douglas Brothers.
      c. Felker Bros. Corp.
      d. Or equal.
   2. General Provisions:
      a. Handling of stainless steel fabrications during manufacturing:
         1) Avoid contact of any ferrous materials with stainless steel.
         2) Use tools dedicated for stainless steel.
         3) Use nylon slings and alloy chains, cable, or straps for handling of stainless steel.
         4) Use storage racks of non-ferrous metal or lined with rubber for storing of stainless steel pipe, fittings, and accessories.
      b. Clean and descale welded stainless steel items in accordance with ASTM A380, and as follows:
         1) Passivate by immersion in a pickling solution of minimum six percent nitric acid and three percent hydrofluoric acid. Temperature and detention time shall be sufficient for removal of oxidation and ferrous contamination without etching the surface. Perform a complete rinsing operation with clean water.
      c. There shall be no staining or streaking from iron and other surface contaminants on ready-to-be-shipped stainless steel items.
      d. Coordinate jointing requirements with equipment specified in other Sections.
      e. Coordinate dimensional tolerances of pipe and fittings as required for couplings.
      f. All paints and markers used for marking stainless steel shall be free of any harmful metal or metal salts, such as zinc, lead, copper or sulfur.

   3. Material: ASTM A312, Type 304/304L or 316/316L, Schedule 5, or 10 Roll or Cut grooved as appropriate to the pipe material, wall thickness, pressure, size and method of joining. Use Victaulic RX roll sets specifically designed for grooving schedule 5 or 10 stainless steel pipe.
   4. Design Conditions:
      a. Design Working Pressure: 250 psi
      b. Design Temperature Range: 5 to 230°F.
   5. Wall Thickness of Pipe and Fittings: Schedule 10S for piping 3" (75 mm) diameter and larger. For reducers and reducing elbows, wall thickness for the larger diameter shall apply for the whole fitting.

6. Manufacture of Mill Pipes:
   a. Conform to ASTM A778 and as specified herein. ASTM A312/A312M pipe may be substituted for ASTM A778 pipe.
   b. Longitudinal Seams: Maximum of two per section.
   c. Girth Seams: Not less than eight feet apart.
   d. Pipe Ends: Plain ends, perpendicular to longitudinal axis, with all burrs removed.
   e. Permissible Variations in Outside Diameter: Difference in extreme outside diameters in any cross section along the length shall not exceed 1.5% of specified outside diameter, in conformance with ASTM A530/A530M.
   f. Straightness: Maximum deviation shall not exceed 1/8-inch per 10-foot length, in conformance with ASTM A530.
   g. Edges: All joint-edges shall be true so as not to leave a shoulder on the inside or outside of the pipe.

7. Shop Fabrication of Pipes:
   a. Required lengths of fabricated pipes shall be based on considerations of piping layout, transportation limitations, and feasibility of handling for actual installation at the job site.
   b. Fabricate pipes in the shop by circumferential welding of mill pipes.
   c. Prepare ends for the pipe joints as specified herein.
   d. Prepare ends for couplings including harnessing in accordance with the recommendations of the coupling manufacturers. Provide reinforcement plates at lugs if necessary to maintain reduced stress levels in the pipe wall and to prevent buckling. Harnessing lugs for sleeve type couplings and end rings for split couplings shall be of Type 316L stainless steel.
   e. Fabricating Tolerances: Conform to Pipe Fabrication Institute recommendations, PFI ES 3.

8. Shop Fabrication of Fittings:
   a. Conform to ASTM A774/A774M and as specified herein. ASTM A403/A403M fittings may be substituted for ASTM A774/A774M fittings.
   b. Long Radius Elbows (11-1/4 through 90 degrees):
      1) Minimum Radius: 1.5 x nominal pipe diameter.
      2) 24” (600 mm) and Smaller: Smooth radius, die formed.
   c. Short Radius Elbows:
      1) Minimum Radius: 1.0 x nominal pipe diameter.
      2) All Sizes: Mitered with minimum four pieces for 90 degree, three pieces for 45-degree or less.
   d. Tees, Wyes, Laterals, and Crosses: Fabricate true and square from pipe and conform to AWWA C208 for dimensions.
   e. Reducers: Eccentric or straight cone type as shown. Minimum length of the reducers shall be equal to four times the difference in larger and smaller diameters.

9. Shop Welding:
   a. All welding procedures and qualifications of the welding procedures shall conform to Section IX of the ASME Boiler and Pressure Vessel Code.
   b. All welders and welding operators shall be qualified under Section IX of the ASME Boiler and Pressure Vessel Code.
   c. Provide full penetration welds, free of cracks, overlap, and cold laps.
   d. Limit on Undercut: 1/32-inch or ten percent of base metal thickness, whichever is less.

e. For pipe wall thickness up to 11-gauge (0.125-inch) use GTAW (Gas Tungsten Arc Welding).
f. Where required for larger diameter and heavier wall pipes, provide joints double beveled and welded from both inside and outside with Flux Core process.
g. Provide internal inert gas purge to exclude atmosphere.
h. Filler Wire: ELC grade, of matching composition or of higher molybdenum content.
i. Weld Thickness: Equal to or greater than parent metal.
j. All welds shall be smooth with an internal crown of 1/16-inch or less, and external crown of 3/32-inch or less.
k. For grinding operations, use iron-free grinding wheels.

10. Shop Examination of Welds:
    a. All personnel performing the examination of welds shall be qualified to at least Level II, in accordance with ASNT SNT-TC-1A.
    b. Conform to Boiler Pressure Vessel Code Section V and applicable articles for examination of welds.
    c. Provide visual examination of all welds, Category D Fluid Service, in conformance with ASME B31.3.
    d. At least ten percent of the welds shall be examined using liquid penetrant examination.
    e. If any defects are detected, 100% of welds shall be examined by liquid penetrant examination.
    f. At conclusion of liquid penetrant examination all penetrant test materials shall be removed by flushing, washing, or wiping clean with applicable solvents.

11. Shop Quality Control and Inspection:
    a. For all stainless steel welded fabrications, maintain quality control program and provide documentation of the following as a minimum:
        1) Welding procedure specification and procedure qualification record conforming to Section IX of ASME Code.
        2) Welder/welding operator performance qualification record in accordance with Section IX of ASME Code.
        3) Maintain detailed procedures and test results relative to examination of welds.
        4) Verification of dimensional tolerances.
        5) Verification of materials used in the fabrication of pipe and fittings traceable to the original heat numbers.
        6) Passivation including pickling and cleaning of all stainless steel fabrication welds.

12. Product Marking:
    a. Conform to ASTM A774/A774M and ASTM A778.

B. Joints
    1. Mechanical Couplings for Joining Stainless Steel Pipe:
        a. Stainless Steel Mechanical Couplings: Manufactured in two or more segments of cast stainless steel, conforming to ASTM A351, A743, and A744. Gaskets shall be pressure-responsive synthetic rubber, grade to suit the intended service, conforming to ASTM D2000. (Gaskets used on potable water systems shall be UL classified in accordance with ANSI/NSF-61 for potable water service.) Mechanical coupling bolts shall be stainless steel, type 316, meeting the physical properties of ASTM A193, grade B8M, Class2.

b. Rigid Type: Cast with key designed to clamp the bottom of the groove to provide an essentially rigid joint. Victaulic Style 489.
c. Flexible Type: Use in locations where vibration attenuation and stress relief are required. Victaulic Style 77S.

2. Ductile Iron Mechanical Couplings: Manufactured in two segments of cast ductile iron, conforming to ASTM A536. Gaskets shall be pressure-responsive synthetic rubber, grade to suit the intended service, conforming to ASTM D2000. Mechanical coupling bolts shall be zinc plated (ASTM B633) heat treated carbon steel track head conforming to ASTM A449 and A183, minimum tensile strength 110,000 psi (758450 kPa).
   a. Sizes to 12" (300 mm), rigid type, designed to clamp the bottom of the groove to provide an essentially rigid joint. Victaulic Style 89.
   b. 14" through 24" (356 mm through 600 mm): Victaulic AGS series with lead-in chamfer on housing key and wide width gasket. Rigid type, housing key shall fill the wedge shaped AGS groove and provide rigidity. Victaulic Style W89.
   c. 2" through 4" (50 mm through 100 mm) sizes may be Installation-Ready, for direct stab installation without field disassembly, with grade EHP gasket rated to +250°F/120°C. Victaulic Style 107N (rigid) or Style 177 (flexible).

3. Flange Adapters: For use with grooved end pipe and fittings, for mating to ANSI Class 125 flanged components. Victaulic Style 441.

C. Grooved End Fittings: Fittings shall be manufactured of stainless steel conforming to ASTM A403, WPW, WPW/S9, or CR/S9, or shall be fabricated from stainless steel pipe conforming to ASTM A312, with factory grooved ends. Fittings shall be type 304/304L or 316/316L stainless steel.
   1. Sizes 14" through 24" (356 mm through 600 mm) shall be provided with AGS grooved ends.
   2. Hole Cut Outlets: Branch reductions on 2"(DN50) through 10"(DN250) stainless steel header piping. Bolted branch outlets shall consist of a grooved or threaded (FPT) outlet housing manufactured from 316 stainless steel conforming to ASTM A351, Grade CF8M, and a hot-dipped galvanized ductile iron strap housing conforming to ASTM A536, Grade 65-45-12; with synthetic rubber gasket, and stainless steel bolts and nuts conforming to ASTM F593 and F594 or heat treated carbon steel zinc plated bolts and nuts conforming ASTM A449. Victaulic Style 422.

D. Grooved End Valves:
   1. Butterfly Valves: 2" - 8" (50 - 200 mm): 300 psi (2068 kPa CWP), suitable for bi-directional and dead-end service to full rated pressure. Grooved end stainless steel body and disc, grade CF8M, conforming to ASTM A351, with blow-out proof 17-4PH stainless steel stems to ASTM A564. Disc shall be connected to the stem without the use of fasteners or pins, and be offset from the disc centerline to provide a full 360° continuous contact with the seating surface when closed. Seat shall be pressure responsive, EPDM or lubricated Nitrile. Stem seals shall be of the same material as the seats. Valve shall have standard ISO flange mounting for ease of actuation. Valve provided with lever handle or gear operator as required. The handle shall be zinc-plated carbon steel or fully stainless steel, latch lock type with infinitely variable and memory stop features. Manufacturer – Victaulic Series 461 Vic-300 MasterSeal Valve.
   2. Butterfly Valves: Grade CF8M stainless steel body and disc, 316 stainless steel stem, PTFE impregnated glass fabric bearings with 316 stainless steel backing, with synthetic rubber seal. (Grade to suit the intended service.) Valve stem shall be offset from the disc

centerline to provide full 360-degree circumferential seating. Bubble-tight, dead-end or bi-directional service to 300 psi (2065 kPa) CWP. Victaulic Series 763.

3. Ball Valves: Grade CF8M stainless steel body, 316 stainless steel ball and stem, TFE seats, fluoroelastomer seals, standard port, two-piece valve. Victaulic Series 726S.
4. Check Valves: 2" - 6" (50 - 150 mm): 300 psi (2068 kPa CWP), grooved end Grade CF8M stainless steel body and disc, 17-4PH stainless steel shaft, with 17-4PH or 316 stainless steel spring, and [EPDM] [Nitrile] [Fluoroelastomer] seat. Suitable for vertical or horizontal installation. Basis of Design: Victaulic Series 416 with OGS (original grooved system) Ends, or E416 with StrengThin™ 100 Ends.

E. Pressure Relief Valves:
1. Cast iron, non-code/ASME Section VIII air relief valve for low to medium pressure high volume blowers. Stainless steel, NPT connections. Stainless steel disc, nozzle, and spring. Field adjustable and testable.
2. Vendor must check size according to the blower equipment provided by contractor. Basis of design sizing is 2" inlet, 2" outlet, 2.786 square-inch orifice area, for a setpoint of 10 psig.
3. Basis of design: Emerson Kunkle model 337.

F. Grooved to Flanged Pipe Ends: Provide, where required, piping with joints matching connections. In some areas Grooved to Flanged piping shall be provided.

2.02 FINAL CLEANING AND SHIPMENT

A. After shop fabrication, mechanically clean accessible weld surfaces with wire brushes and/or non-metallic abrasives.

B. Pipe, fittings and flanges shall be free of iron particulates or other foreign material.

2.03 IDENTIFICATION

A. All pipeline materials shall be stamped, marked or identified with the following:
1. Name of manufacturer.
2. Date of manufacture.
3. Operating design pressure at operating design temperature.
4. Type of service.
5. Manufacturer's part number.

PART 3 EXECUTION

3.01 INSPECTION

A. Contractor shall inspect all piping to ensure that piping is free of defects in material and workmanship.

3.02 INSTALLATION

A. Install piping as specified and as recommended by the manufacturer and in conformance with Referenced Standards article and approved Shop Drawings.

B. Do not use carbon steel wire rope or uncoated chain slings and rigging to install stainless steel piping.

C. Use anti-seize compound for stainless steel nuts and bolts to prevent galling.

D. Conform to expansion joint or coupling manufacturer's recommendations for installation of expansion joints and couplings.

E. After installation of stainless steel piping, wash all foreign matter from the piping surface with detergent and hot water followed by rinse cleaning. All shop welds shall be cleaned in accordance with paragraph 2.1.A.2.b. Field welding shall not be permitted.

F. If rusting of embedded iron occurs, pickle the affected surface with Oakite Deoxidizer or equal, scrub with stainless steel brushes and rinse clean.

G. Flanged Joints:
   1. Bolts shall be tightened in a sequence which will ensure equal distribution of bolt loads.
   2. Length of bolts shall be uniform, and they shall not project beyond the nut more than 1/4" (6 mm) or fall short of the nut when fully taken up. Ends of bolts shall be machine cut so as to be neatly rounded. No washers shall be used.
   3. Bolt threads and gasket faces for flanged joints shall be lubricated prior to assembly.
   4. Alternately tighten bolts 180 degrees apart to compress the gasket evenly.

3.03 TESTING

A. General:
   1. Test of all air piping as specified below, unless otherwise authorized by Engineer.
   2. Notify Engineer 48 hours in advance of testing.
   3. Provide all testing apparatus including compressors, hoses, gages, and fittings.
   4. Repair and retest piping which fail to hold specified test pressures or which exhibit signs of leakage.
   5. Conduct all tests in the presence of the Engineer.

B. Test Procedure:
   1. Ensure that all supports and restraint systems are securely in place. Expansion joint tie rods shall be placed in the neutral position to avoid expansion during test.
   2. Install blind flanges or cap as required to test piping.
   3. Fill piping with dry air and pressurize to test pressure.
   4. Test all joints with soapy water solution.
   5. Piping shall maintain test pressure for one hour.
   6. Purge piping completely with dry compressed air after pressure and leakage tests have been satisfactorily completed.

END OF SECTION

SECTION 40 05 31 – POLYVINYL CHLORIDE PROCESS PIPE

PART 1 -- GENERAL

1.1 DESCRIPTION

A. Scope: CONTRACTOR shall provide all labor, materials, equipment and incidentals as shown, specified, and required to install and test all thermoplastic pipe and associated fittings.

B. Related Sections:

1. Section 40 11 09 Interior Piping
2. Section 40 11 11 Valves and Actuators
3. Section 40 05 06 - Couplings, Adapters, and Specials for Process Piping: Pipe penetrations, restrained joints, flexible connections, expansion joints and loops, and sleeve-type couplings.
4. Section 40 05 07 - Hangers and Supports for Process Piping: Hangers, anchors, sleeves, and sealing of piping to adjacent structures.

1.2 REFERENCES

A. Standards referenced in this Section are:

1. ASTM D1784, Specification for Rigid Poly (Vinyl Chloride) (PVC) Compounds and Chlorinated Poly (Vinyl Chloride) (CPVC) Compounds.
2. ASTM D1785, Specification for Poly (Vinyl Chloride) (PVC) Plastic Pipe, Schedules 40, 80 and 120.
3. ASTM D2466, Specification for Poly (Vinyl Chloride) (PVC) Plastic Pipe Fittings, Schedule 40.
4. ASTM D2467, Specification for Poly (Vinyl Chloride) (PVC) Plastic Pipe Fittings, Schedule 80.
5. ASTM D2564, Specification for Solvent Cements for Poly (Vinyl Chloride) (PVC) Plastic Piping Systems.
6. ASTM D2665, Specification for Poly (Vinyl Chloride) (PVC) Plastic Drain, Waste, and Vent Pipe and Fittings.
7. ASTM D3034, Specification for Type PSM Poly (Vinyl Chloride) (PVC) Sewer Pipe and Fittings.
8. ASTM D3035, Specification for Polyethylene (PE) Plastic Pipe (DR-PR) Based on Controlled Outside Diameter.
9. ASTM D3139, Specification for Joints for Plastic Pressure Pipes Using Flexible Elastomeric Seals.
10. ASTM D3212, Specification for Joints for Drain and Sewer Plastic Pipes Using Flexible Elastomeric Seals.
11. ASTM D3261, Specification for Butt Heat Fusion Polyethylene (PE) Plastic Fittings for Polyethylene (PE) Plastic Pipe and Tubing.
12. ASTM F441/F441M, Specification for Chlorinated Poly (Vinyl Chloride) (CPVC) Plastic Pipe, Schedules 40 and 80.
13. ASTM F477, Specification for Elastomeric Seals (Gaskets) for Joining Plastic Pipe.
14. ASTM F1336, Specification for Poly (Vinyl Chloride) (PVC) Gasketed Sewer Fittings.
15. NSF 61, Drinking Water System Components – Health Effects.

1.3 SUBMITTALS

A. Shop Drawings:

1. Submit piping layout Shop Drawings in accordance with Section 40 11 09, Interior Piping.
2. Submit product data on pipe, fittings, gaskets, hardware, and appurtenances sufficient to demonstrate compliance with the Contract Documents.
3. Submit manufacturer's certificate of compliance standards referenced in this Section.

PART 2 -- PRODUCTS

2.1 SERVICE CONDITIONS

A. General:

1. Pipe materials shall be suitable for services intended. Refer to piping schedules in Section 40 11 09, Interior Piping.
2. Pipe shall be homogeneous throughout and free of visible cracks, holes, foreign inclusions, and other defects. Unless otherwise shown or indicated, pipe shall be uniform in color, opacity, density, and other physical properties.
3. Pipe, fittings, and appurtenances in contact with potable water or water that will be treated to become potable shall be listed in ANSI/NSF 61 as being suitable for contact with potable water, and shall comply with requirements of the authorities having jurisdiction at the Site.

2.2 POLYVINYL CHLORIDE (PVC) PIPING

A. PVC Pipe — General Applications: Unless otherwise shown or indicated, PVC pipe shall comply with the following:

1. Manufacturers: Provide products of one of the following:
   a. Victaulic, Inc.
   b. Ipex, Inc.
   c. Spears Manufacturing Company.
   d. Or equal.

2. Material: Unless otherwise specified, comply with the following:
   a. Type and Grade: Type 1, Grade 1.

3. Wall Thickness: Schedule 80 complying with ASTM D1784 and ASTM D1785, and US Product Service PS 21-70 as having same outside diameter dimension as cast-iron pipe.
4. Temperature Rating: Rated for temperature to 140 degrees F.
5. Color: Gray.

B. Fittings: Type, grade, schedule, and color of fitting shall match the associated pipe.

1. Solvent Weld: Comply with ASTM D2467.
2. Threaded: Threaded fittings shall comply with ASTM D2464.
3. Flanged: Provide flanged fittings with Neoprene gaskets.
4. Grooved: Provide couplings with elastomer seals.

C. Joints:

1. Solvent Weld: Use primer and solvent cement recommended by PVC pipe manufacturer for the application. Primer shall be in accordance with ASTM F656, and solvent cement shall be in accordance with ASTM D2564.
2. Threaded: Use 100 percent virgin polytetrafluoroethylene (Teflon or PTFE) tape for threaded fittings. Pipe shall not be threaded.
3. Flanged: Provide with backup flange minimum 1/8-inch thick. Backup flanges and connecting bolts shall be Type 304 stainless steel.
4. Grooved: Provide grooved Piping with steel couplings and stainless-steel connection bolts.
5. Grooved to Flanged: Where required, provide piping with flanged and grooved joints on opposite ends.

PART 3 -- EXECUTION

3.1 INSPECTION

A. Inspect pipe materials for defects in material and workmanship. Verify compatibility of pipe and fittings.

3.2 INSTALLATION

A. For exposed piping installation, refer to Section 40 11 09, Interior Piping.

END OF SECTION

SECTION 40 05 41

COPPER PIPE AND TUBING

PART 1 - GENERAL

1.1 SUMMARY

A. Section Includes:
   1. Copper pipe and fittings.
   2. Copper tube and fittings.
   3. Accessories.

B. Related Requirements:
   1. Section 331300 - Disinfecting of Water Utility Distribution: Disinfection requirements for potable water systems.

1.2 REFERENCE STANDARDS

A. American Welding Society:
   1. AWS A5.8/A5.8M - Specification for Filler Metals for Brazing and Braze Welding.

B. ASME International:
   1. ASME B1.1 - Unified Inch Screw Threads, UN and UNR Thread Form.
   2. ASME B1.20.1 - Pipe Threads, General Purpose, Inch.
   3. ASME B16.5 - Pipe Flanges and Flanged Fittings: NPS 1/2 through NPS 24 Metric/Inch Standard.
   4. ASME B16.15 - Cast Copper Alloy Threaded Fittings: Classes 125 and 250.
   5. ASME B16.18 - Cast Copper Alloy Solder Joint Pressure Fittings.
   6. ASME B16.20 - Metallic Gaskets for Pipe Flanges: Ring-Joint, Spiral-Wound, and Jacketed.
   7. ASME B16.21 - Nonmetallic Flat Gaskets for Pipe Flanges.
   8. ASME B16.22 - Wrought Copper and Copper Alloy Solder Joint Pressure Fittings.
   9. ASME B16.23 - Cast Copper Alloy Solder Joint Drainage Fittings: DWV.
   10. ASME B16.24 - Cast Copper Alloy Pipe Flanges and Flanged Fittings: Classes 150, 300, 600, 900, 1500, and 2500.
   11. ASME B16.26 - Cast Copper Alloy Fittings for Flared Copper Tubes.
   12. ASME B16.29 - Wrought Copper and Wrought Copper Alloy Solder Joint Drainage Fittings - DWV.
   13. ASME B31.1 - Power Piping.

C. ASTM International:
   1. ASTM B88 - Standard Specification for Seamless Copper Water Tube.
   2. ASTM B32 - Standard Specification for Solder Metal.
   3. ASTM B42 - Standard Specification for Seamless Copper Pipe, Standard Sizes.
   4. ASTM B61 - Standard Specification for Steam or Valve Bronze Castings.
   5. ASTM B62 - Standard Specification for Composition Bronze or Ounce Metal Castings.
   6. ASTM B75/B75M - Standard Specification for Seamless Copper Tube.
   7. ASTM B98/B98M - Standard Specification for Copper-Silicon Alloy Rod, Bar and Shapes.
   8. ASTM B124/B124M - Standard Specification for Copper and Copper Alloy Forging Rod, Bar, and Shapes.
   9. ASTM B150/B150M - Standard Specification for Aluminum Bronze Rod, Bar, and Shapes.

10. ASTM B251 - Standard Specification for General Requirements for Wrought Seamless Copper and Copper-Alloy Tube.
11. ASTM B302 - Standard Specification for Threadless Copper Pipe, Standard Sizes.
12. ASTM B306 - Standard Specification for Copper Drainage Tube (DWV).

D. Manufacturers Standardization Society:
1. MSS SP-58 - Pipe Hangers and Supports - Materials, Design, Manufacture, Selection, Application, and Installation.

E. NSF International:
1. NSF 61 - Drinking Water System Components - Health Effects.
2. NSF 372 - Drinking Water System Components - Lead Content.

1.3 SUBMITTALS

A. Section 013300 - Submittal Procedures: Requirements for submittals.

B. Product Data: Submit manufacturer information regarding pipe, tube, and fittings.

C. Shop Drawings: Indicate layout of piping systems, including equipment, critical dimensions, sizes, and materials list.

D. Manufacturer's Certificate: Certify that products meet or exceed specified requirements.

E. Field Quality-Control Submittals: Indicate results of Contractor-furnished tests and inspections (pressure testing and bacteriological testing results).

F. Qualifications Statements:
1. Submit qualifications for manufacturer, installer, and licensed professional.

1.4 CLOSEOUT SUBMITTALS

A. Project Record Documents: Record actual locations of piping, valves and other appurtenances, connections, and invert elevations. All valves shall be located with survey accuracy. All pipe shall be located with survey accuracy with on data point per each pipe segment at a minimum.

B. Identify and describe unexpected variations to subsoil conditions or discovery of uncharted utilities.

1.5 QUALITY ASSURANCE

A. Permanently mark each length of pipe with manufacturer's name or trademark and indicate conformance to standards.

B. Materials in Contact with Potable Water: Certified according to NSF 61 and NSF 372.

C. Perform Work according to Alaska Department of Environmental Conservation and City of Bethel standards.

1.6 QUALIFICATIONS

A. Manufacturer: Company specializing in manufacturing products specified in this Section with minimum three years of documented experience providing same in potable water applications.

B. Installer: Company specializing in performing Work of this Section with minimum five years of documented experience installing potable water systems in the State of Alaska.

1.7 DELIVERY, STORAGE, AND HANDLING

A. Inspection: Accept materials on Site in manufacturer's original packaging and inspect for damage.

B. Store materials according to manufacturer instructions.

C. Protection:
   1. Protect materials from moisture and dust by storing in clean, dry location remote from construction operations areas.
   2. Protect piping and appurtenances by storing off ground.
   3. Provide additional protection according to manufacturer instructions.
   4. Maintain inside piping cleanliness by keeping ends sealed with plastic caps or other suitable method until installation is completed.

1.8 EXISTING CONDITIONS

A. Field Measurements:
   1. Verify field measurements prior to fabrication.
   2. Indicate field measurements on Shop Drawings.

PART 2 - PRODUCTS

2.1 COPPER PIPE, TUBE, AND FITTINGS

A. All products used in potable water service must be NSF-61 certified, certified “lead free”, and meet ANSI/AWWA C-800 latest edition. This requirement supersedes any other standard referenced in this (or other) specification section.

B. Pipe:
   1. Material: Seamless copper.
   2. Comply with ASTM B88.
   3. Temper: Annealed.
   4. Type: K or L.

C. Tube:
   1. Material: Seamless copper alloy.
   2. Comply with ASTM B88.
   3. Type: K or L.
   4. Temper: Drawn or Soft Annealed.

D. Fittings:
   1. Material: Copper alloy.
   2. Temper: Comply with ASTM B62.
   3. Solder-Joint Fittings: Comply with ASME B16.18.
   4. Flared Fittings: Comply with ASME B16.26.
   5. Threaded Fittings:
      a. Material: Cast bronze.
      b. Comply with ASME B16.15.
      c. Threads: Comply with ASME B1.20.1.
   6. Flanges and Flanged Fittings:
      a. Comply with ASME B16.24.
      b. Class 150.
      c. Gaskets:

1) Material: Neoprene.
2) Comply with ASME B16.5 and ASME B16.21.
3) Thickness: 1/16 inch.

7. Seals:
   a. Material: EPDM.
   b. Factory installed.

8. Tubing Compression Fittings:
   a. Material: Forged brass alloy.
   b. Comply with ASTM B124.
   c. Threads: Comply with ASME B1.1.
   d. Press Fittings:
      1) Material: Copper.
      2) Comply with ASME B16.18.

9. Grooved Fittings, couplings, and gaskets:
   a. Material for fittings: Cast brass alloy, NSF-61 and NSF-372 certified
   b. Rolled groove or cast fittings.
   c. Victaulic Style 607 or Engineer approved equal couplings with NSF-61 certified Grade P Fluoroelastomer gaskets and 316SS bolts/nuts.

E. Pipe Joints:
   1. Type:
      a. Threaded, flanged, or grooved.
      b. Connections to Equipment: Flanged.

F. Tube Joints:
   1. Type: Soldered, flared, press compression, or compression.

2.2 ACCESSORIES

A. Bolting: Comply with ASTM B98.

B. Solder:
   1. Comply with ASTM B32 and AWS A5.8.

C. Piping Supports:
   1. Material: Padded/isolated steel or galvanized steel.
   2. To prevent possibility of galvanic corrosion, direct contact with steel and/or galvanized steel hangers is not allowed. Provide rubber (or equal) insulating material between hangers or supports and copper piping.
   3. Comply with section 22 05 29 – Pipe Hangers and Supports.

2.3 SOURCE QUALITY CONTROL

A. Provide shop inspection and testing of off-site completed assemblies.

B. Provide certificates for materials in contact with potable water to verify compliance with NSF-61.

C. Certificate of Compliance:
   1. If manufacturer is approved by authorities having jurisdiction, submit certificate of compliance indicating Work performed at manufacturer's facility conforms to Contract Documents.
   2. Specified shop tests are not required for Work performed by approved manufacturer.

PART 3 - EXECUTION

3.1 EXAMINATION

A. Inspect existing flanges for nonstandard bolt hole configurations or design and verify that new pipe and flange mate properly.

3.2 PREPARATION

A. Thoroughly clean pipe and fittings before installation.

B. Ensure compliance with sections 33 12 13 and 33 13 00.

3.3 INSTALLATION

A. Comply with ASME B31.1.

B. Run piping straight along alignment as indicated on Drawings, with minimum number of joints.

C. Fittings:
   1. Clean gasket seats thoroughly, and wipe gaskets clean prior to installation.
   2. Install fittings according to manufacturer instructions.
   3. Bolts:
      a. Tighten bolts progressively, drawing up bolts on opposite sides until bolts are uniformly tight.
      b. Use torque wrench to tighten bolts to manufacturer instructions.

D. Provide required upstream and downstream clearances from devices as indicated on Drawings.

E. Install piping with sufficient slopes for venting air or draining liquids to low points. Even if not indicated on the plans, provide high point vents and low point drains.

F. Support exposed piping as specified in Section 220529 - Hangers and Supports for Process Piping.

G. Disinfection: Disinfect potable water piping as specified in Section 331300 - Disinfecting of Water Piping.

H. Dielectric Fittings: Provide between dissimilar metals.

I. Field Cuts: According to pipe manufacturer instructions.

3.4 FIELD QUALITY CONTROL

A. Inspection:
   1. Inspect for damage to pipe lining or coating and for other defects that may be detrimental as determined by Architect/Engineer.
   2. Repair damaged piping or provide new, undamaged pipe.
   3. After installation, inspect for proper supports and interferences.

B. Pressure Testing:
   1. Test Pressure: Not less than 150 psig or 50 psi in excess of maximum static pressure, whichever is greater.
   2. Conduct hydrostatic test for minimum two hours.
   3. Filling:
      a. Fill section to be tested with water slowly and expel air from piping at high points.
      b. Install corporation cocks at high points.
      c. Close air vents and corporation cocks after air is expelled.

d. Raise pressure to specified test pressure.

4. Observe joints, fittings, and valves under test.
5. Remove and renew cracked pipe, joints, fittings, and valves showing visible leakage and retest.
6. Leakage:
   a. Correct visible deficiencies and continue testing at same test pressure for additional two hours to determine leakage rate.
   b. Maintain pressure within plus or minus 5 psi of test pressure.
   c. Leakage is defined as quantity of water supplied to piping necessary to maintain test pressure during period of test.
   d. Compute maximum allowable leakage by following formula:
      1) L = SD x sqrt(P)/C.
      2) L = testing allowance in gph.
      3) S = length of pipe tested in feet.
      4) D = nominal diameter of pipe in inches.
      5) P = average test pressure during hydrostatic test in psig.
      6) C = 148,000.
      7) If pipe under test contains sections of various diameters, calculate allowable leakage from sum of computed leakage for each size.
   e. If test of pipe indicates leakage greater than allowed, locate source of leakage, make corrections, and retest until leakage is within allowable limits.
   f. Correct visible leaks regardless of quantity of leakage.

3.5 CLEANING

A. Keep pipe interior clean as installation progresses.

B. After installation, clean pipe interior of soil, grit, and other debris. Use potable water for flushing water lines. Comply with AWWA standards for potable water piping and service lines.

END OF SECTION

SECTION 40 11 09 - INTERIOR PIPING

PART 1 GENERAL

1.01 SECTION INCLUDES

A. Furnishing and installing all piping located in interior of water treatment plant building/

1.02 RELATED REQUIREMENTS

A. Section 09 90 00 - Painting and Coating

B. Section 33 01 10 - Disinfection of Water Utility Piping

C. Section 33 05 05 - Hydrostatic Testing

1.03 SUBMITTALS

A. Product Data adequate to demonstrate compliance with any and all specifications outlined in this document and referenced specifications.

PART 2 PRODUCTS

2.01 DUCTILE IRON PIPE

A. Ductile iron pipe shall be used where indicated on drawings or specified. Pipe sizes shall be as indicated on drawings.
   1. All pipe, fittings, and accessories shall conform to the following American Water Works Association (AWWA) standards as applicable.
      a. AWWA C104 Cement Mortar Lining for Ductile Iron and Gray Iron Pipe and Fittings for Water
      b. AWWA C110 Gray Iron and Ductile Iron Fittings, 3 in. Through 48 in., for Water and Other Liquids
      c. AWWA C115 - Flanged Cast Iron and Ductile Iron Pipe With Threaded Flanges
      d. AWWA C151 Ductile Iron Pipe, Centrifugally Cast in Metal Molds or Sand Lined Molds, for Water or Other Liquids

B. Pressure Class: Ductile iron pipes shall be Class 250 conforming to AWWA C151. Pipe shall be factory coated for corrosion protection or field coated as per Section 09 90 00.

C. Provide pipe ends grooved-to-flanged where necessary.

2.02 STAINLESS STEEL PIPE

A. See Section 40 05 23-43

2.03 PVC PIPE

A. PVC pipe shall be used where indicated on drawings or required by specifications. All PVC pipe shall conform to the following standards:
   1. ASTM D1784, Specification for Rigid Poly (Vinyl Chloride) (PVC) Compounds and Chlorinated Poly (Vinyl Chloride) (CPVC) Compounds.

2. ASTM D1785, Specification for Poly (Vinyl Chloride) (PVC) Plastic Pipe, Schedules 40, 80 and 120.
3. ASTM D2466, Specification for Poly (Vinyl Chloride) (PVC) Plastic Pipe Fittings, Schedule 40.
4. ASTM D2467, Specification for Poly (Vinyl Chloride) (PVC) Plastic Pipe Fittings, Schedule 80.
5. ASTM D2564, Specification for Solvent Cements for Poly (Vinyl Chloride) (PVC) Plastic Piping Systems.
6. ASTM D2665, Specification for Poly (Vinyl Chloride) (PVC) Plastic Drain, Waste, and Vent Pipe and Fittings.
7. ASTM D3034, Specification for Type PSM Poly (Vinyl Chloride) (PVC) Sewer Pipe and Fittings.
8. ASTM D3035, Specification for Polyethylene (PE) Plastic Pipe (DR-PR) Based on Controlled Outside Diameter.
9. ASTM D3139, Specification for Joints for Plastic Pressure Pipes Using Flexible Elastomeric Seals.
10. ASTM D3212, Specification for Joints for Drain and Sewer Plastic Pipes Using Flexible Elastomeric Seals.
11. ASTM D3261, Specification for Butt Heat Fusion Polyethylene (PE) Plastic Fittings for Polyethylene (PE) Plastic Pipe and Tubing.
12. ASTM F441/F441M, Specification for Chlorinated Poly (Vinyl Chloride) (CPVC) Plastic Pipe, Schedules 40 and 80.
13. ASTM F477, Specification for Elastomeric Seals (Gaskets) for Joining Plastic Pipe.
14. ASTM F1336, Specification for Poly (Vinyl Chloride) (PVC) Gasketed Sewer Fittings.

B. Manufacturers: Provide products manufactured by one of the following pre-approved vendors:
   1. Victaulic, Inc.
   2. Ipex, Inc.
   3. Spears Manufacturing Company.
   4. “Or Equal” products are acceptable with Engineers approval.

C. Material: Unless otherwise specified, comply with the following:
   1. Type and Grade: Type 1, Grade 1.
   2. Wall Thickness: Schedule 80 complying with ASTM D1784 and ASTM D1785, and US Product Service PS 21-70 as having same outside diameter dimension as cast-iron pipe.
   3. Temperature Rating: Rated for temperature to 140 degrees F.
   4. Color: Gray.

D. Fittings: Type, grade, schedule, and color of fitting shall match associated pipe.
   1. Solvent Weld: Comply with ASTM D2467.
   2. Threaded: Threaded fittings shall comply with ASTM D2464.
   3. Flanged: Provide flanged fittings with Neoprene gaskets.
   4. Grooved: Provide couplings with elastomer seals.

E. Joints:
   1. Solvent Weld: Use primer and solvent cement recommended by PVC pipe manufacturer for the application. Primer shall be in accordance with ASTM F656, and solvent cement shall be in accordance with ASTM D2564.
   2. Threaded: Use 100 percent virgin polytetrafluoroethylene (Teflon or PTFE) tape for threaded fittings. Pipe 1.5” and larger shall not be threaded.

3. Flanged: Provide with backup flange minimum 1/8” thick. Backup flanges and connecting bolts shall be Type 304 stainless steel.
4. Grooved: Provide grooved Piping with steel couplings and stainless-steel connection bolts.
5. Grooved to Flanged: Where required, provide piping with flanged and grooved joints on opposite ends.

2.04 PIPE HANGERS & SUPPORTS:

A. General: Contractor shall be responsible for providing hangers and supports for all interior piping. Unless otherwise indicated, all pipe supports shall be standard, commercially accepted pipe supports and accessories. In locations where a standard support cannot be used, Contractor shall be responsible for fabricating these supports in accordance with details provided in Drawings. Support spacing shall be as indicated on drawings. Where no spacing is indicated, Contractor shall provide adequate support to eliminate all sagging in pipe, to eliminate all dead loads on equipment or tank flanges, and/or movement of pipe when subjected to operating flow and pressure of transported fluid.

B. Adjustable Pipe Stands Floor Supports: Pipe stands shall be ITT Grinnell Figure 259 pipe stands with U-bolt strap with Figure 62 adjustable pipe stanchions, or approved equals.

C. Wall Hangers & Supports: For pipes 1" in diameter or less, use Unistrut Corporation J1205N through J1220N, or approved equal. Where larger piping is supported from wall, a wall support and "U" bolt shall be installed. Wall support shall be Figure 195 or 199 as manufactured by ITT Grinnell, or approved equal.
1. Small diameter pipe supports for attachment of 1” to 3” diameter pipe to walls shall consist of all-purpose metal framing. Metal framing shall be 1-5/8” square and constructed of hot-dipped galvanized steel, as manufactured by Unistrut. Pipe straps shall be Unistrut Series P2558 of appropriate size, or approved equal. Support spacing shall be as indicated on Drawings. Where no spacing is indicated, Contractor shall provide adequate support to eliminate all sagging in pipe and/or movement of pipe when subjected to th operating flow and pressure of transported fluid.

D. Solid Wall, Ceiling or Floor Anchor Bolts: Anchor bolts used to attach structural steel support brackets in solid masonry or concrete ceilings, walls and floors shall have an externally threaded stud with a full length expanding sleeve as manufactured by Hilti, or approved equal. Anchor bolts shall be stainless steel and shall be installed per manufacturer's recommendations. Minimum size and depths of embedment shall be as indicated in Drawing details for specific use.

E. Hollow Wall Anchor Bolts: Anchor bolts for attachment of structural steel support brackets in hollow masonry walls shall be sleeve anchor type as manufactured by Hilti, or approved equal. Anchor bolts shall be 3/8" stainless steel and shall be installed according to manufacturer’s recommendations. Minimum depths of embedment shall be 1-1/2".

F. Corrosion Protection: All new fabricated metal supports shall be painted for corrosion protection as specified in Section 09 90 00.

G. Discrepancies: Where discrepancies between drawings and specifications are discovered, specifications shall prevail.

2.05 WALL & FLOOR PENETRATION SEALS:

A. Cored concrete wall and floor penetrations shall be sealed with Link-Seal penetration seals, or equal, per detail in Drawings. All bolts and nuts shall be stainless steel.

PART 3 EXECUTION

3.01 INSTALLATION

A. General: All steel pipe installation shall conform to standards of AWWA Manual M11. Pipe runs shall be installed where indicated in Drawings if piping is dimensioned. Where piping is not dimensioned Contractor shall install pipe as close as possible to locations indicated, taking care to maintain a neat appearance. Anchor pipe securely to building structure where indicated or required.

B. Fabrication: Pipe shall be accurately cut to required lengths using tools specifically designed for material involved. All piping shall be reamed to full size after cutting.
   1. Changes in directions and intersection of lines shall be made with fabricated fittings. All manifolds, header pipes and unique joint and penetration configurations shall be shop fabricated. Mitering of pipe to form elbows, notching of straight runs to form toes, or any similar construction will not be permitted.

C. Assembly:
   1. Flanged Joints: Thoroughly clean gasket and all surfaces that will contact gasket and thoroughly brush with soapy water. Faces of flanges must be entirely free of sand, grit, grease and other foreign matter. Tighten bolts alternately and evenly to torque required to generate specific bolt preload recommended by manufacturer, calculated using formula:

$$T(ft-lb) = \frac{K \cdot D \cdot W}{12 \cdot N}$$

      where K = nut factor, D = bolt diam. (in), W = total design bolt load (lb), and n = number of bolts. Torquing shall be applied in four (4) total passes following a cross pattern on first three passes, with each pass effecting a torque of 1/3, 2/3, and total torque, respectively. Fourth and final pass shall also be at full torque, with bolts tightened in a counterclockwise sequence. Ineffective sealing will require disassembly, inspection for defects and proper reassembly of joints.
   2. Threads on pipes shall be carefully cut with proper thread dies and shall be smooth and continuous. Screwed joints shall be made up with Teflon tape or an approved lead-free thread lubricant for service involved and applied to male threads only. Joints that are required to be backed off shall be entirely disjointed, threads of both pipe and fittings shall be cleaned, new Teflon tape applied, and connection reassembled.
   3. Dielectric unions or fittings shall be used between any two pipe materials of non-identical material.

D. Handling of Pipe and Accessories: All pipe furnished by Contractor shall be delivered and distributed at site by Contractor. Pipe, fittings, and accessories shall be loaded and unloaded by lifting with hoists or by skidding to avoid shock or damage. Under no circumstances shall such material be dropped. Pipe handled on skidways shall not be skidded or rolled against pipe already on ground.

1. In distributing material at site of work, each piece shall be unloaded near place where it is to be installed or in an acceptable storage area.

E. Protecting Pipe: Every precaution shall be taken to prevent foreign material from entering pipe while it is being placed in line. Before pipe installed under this contract will be accepted by Owner, Contractor shall remove all debris, earth, rocks or other foreign material from pipe. At all times when pipe installation is not actually in progress, open ends of pipe shall be closed by temporary plugs, caps, or other approved means.

F. Alignment & Grade: Horizontal piping runs shall be installed level unless otherwise indicated with a slope and vertical runs shall be accurately plumbed.
   1. Drain Lines: Pitch interior and exterior at 1/4" per foot minimum or as shown on Drawings. Verify actual inverts, slopes, etc. prior to installation. Make all changes of direction and junctions with Y fittings and 1/8 bends.

G. Electrical Equipment Clearance: No piping shall be installed directly above electrical switchboards or panelboards nor within dedicated clearance spaces required by National Electric Code.

3.02 TESTING AND CLEANING:

A. Clean and sterilize all water lines in accordance with Section 33 01 10.
   1. NOTE: no chlorine should be allowed to reach inlet of NF skid. See NF skid manufacturer installation instructions for cleaning and testing of lines.

B. Hydro-test all piping per Section 33 05 05.

END OF SECTION

SECTION 40 11 11 – VALVES AND ACTUATORS

PART 1 - GENERAL

1.1 Description:

A. This section includes materials, testing, and installation of manually operated valves, check valves, and process valves including gate, butterfly, knife gate, ball, eccentric plug, lubricated plug, hose bibbs, globe, angle, needle, diaphragm, check, pinch, solenoid, mud valves, and flap valves.

B. This section includes materials, testing, and installation of motorized actuators to be installed on existing butterfly valves at the facility.

1.2 Related Work Specified Elsewhere:

A. Painting and Coatings: 09 90 00

B. Pressure Testing: 33 05 05

1.3 Submittals:

A. Submit manufacturer's catalog data and detail construction sheets showing all valve parts and describing by material of construction and specification (such as AISI, ASTM, SAE, or CDA). Identify each valve by tag number to which the catalog data and detail sheets pertain.

B. Show dimensions and orientation of valve actuators, as installed on the valves. Show location of internal stops for gear actuators.

C. Show valve linings and coatings. Submit manufacturer's catalog data and descriptive literature.

PART 2 - MATERIALS

2.1 General:

A. Install valves complete with operating handwheels or levers, chainwheels, extension stems, floor stands, gear actuators, operating nuts, chains, and wrenches required for operation.

B. Valves shall have the name of the manufacturer and the size of the valve cast or molded onto the valve body or bonnet or shown on a permanently attached plate.

2.2 Manual Valve Operators:

A. Provide lever or wrench operators for valves 6 inches and smaller. For larger valves, provide gear driven handwheels.

B. Provide handwheels or lever operators as indicated on the plans or elsewhere in the specifications.

C. Design gear operators assuming the differential pressure across the plug or disc is equal to the test pressure of the connecting piping.

D. Gear operators shall be enclosed, oil lubricated, with seals provided on shafts to prevent entry of dirt and water into the operators. Gear operators shall have handwheels. The operators shall contain a dial indicating the position of the valve disc or plug.

E. Traveling nut and worm and gear actuators shall be of the totally enclosed design so proportioned as to permit operation of the valve under full differential pressure rating of the valve with a maximum pull of 80 pounds on the handwheel or crank. Provide stop limiting devices in the actuators in the open and closed positions.

F. Self-locking worm gear shall be a one-piece design of gear bronze material (ASTM B 427), accurately machine cut. The worm shall be hardened alloy steel (ASTM A 322, Grade G31400l; or ASTM A 148, Grade 105-85), with thread ground and polished. Support worm gear shaft at each end by ball or tapered roller bearings. The reduction gearing shall run in a proper lubricant.

G. Valve actuators, handwheels, or levers shall open by turning counterclockwise.

2.3 Motorized Valve Actuators:

A. Provide motorized actuators for valves as indicated on the plans or elsewhere in the specifications.

B. Motorized Valve Actuators: Butterfly Valves – Flow Regulating Service (01-FV-014)
1. Electric actuators for Butterfly Valves in modulating service (01-FV-014) shall be Rotork IQ Series to fit Dezurik High Performance (BHP) Butterfly Valves.
2. Motor Voltage: 120V, 1 ph,
3. Fail Position: Closed
4. Limit switches: open and closed
5. Electric Actuators and are to incorporate motor, integral reversing starter, local control facilities and terminals for remote control and indication connections housed within a self-contained, sealed enclosure.
6. Actuator shall have manual override and handwheel operator.
7. The actuator must be sized to guarantee valve closure at the specified differential pressure and temperature. The safety margin of motor power available for seating and unseating the valve must be sufficient to ensure torque switch trip at maximum valve torque with supply voltage 10% below nominal.

C. Motorized Valve Actuators: Butterfly Valves - Open/Close (MV-435. MV-436, MV-437, MV-438, MV-439)
1. Electric actuators shall be Bray Series 70 to fit Bray Series 31 Lug Butterfly valves.
2. Motor Voltage: 120v/1ph
3. Fail Position: Last
4. Limit switches: open and closed
5. Actuator shall have manual override and handwheel operator.
6. Bray Series 70-020 for 8” valves or 70-065 for 14” valves (with vendor approval of sizes and stem torque limits) or approved equal.

D. Motorized Valve Actuator: Backwash EQ Effluent Control Valve Motorized Actuator (FV-603A/B) – Modulating Service
1. Electric actuator shall be Bray Series 70 sized to fit Bray Series S19 Segmented Ball Valve.
2. Motor Voltage: 120v/1ph
3. Fail Position: Last
4. Limit switches: open and closed
5. Electric Actuators and are to incorporate motor, integral reversing starter, local control facilities and terminals for remote control and indication connections housed within a self-contained, sealed enclosure.

6. Actuator shall have manual override and handwheel operator.
7. Bray Series 70-006 (with vendor approval of size and stem torque limit) or approved equal.

E. Motorized Valve Actuator: Ball Valves - Open/Close (MV-TK701/MV-TK702)
1. Electric actuator shall be Hayward Series EAU1 to fit Hayward TBH True Union Valve
2. Motor voltage: 120v
3. Limit switches: open and closed
4. Actuator shall have manual override.
5. Hayward EAU129 for valves 2" and smaller or approved equal

F. Motor Power requirements:
1. Voltage: 120 VAC
2. Frequency: 60 Hz
3. Phase: 1 pH

G. Actuators shall be of the self-locking type to prevent the disc or plug from creeping. Mechanical stainless steel travel stops shall be provided and located outside the actuator enclosure for ease of adjustment.

H. Enclosure:
1. O-ring sealed, watertight to IP66/IP68 20m for 1o days, NEMA 4,6.
2. The motor and all other internal electrical elements of the actuator must be protected from ingress of moisture and dust when the terminal cover is removed for site cabling.
3. The actuator enclosure must allow for temporary site storage without the need for electrical supply connection All external fasteners shall be suitable for actuator corrosivity category and installation environment.

I. Torque and Limits
1. Torque and turns limitation to be adjustable as follows:
   a. Position setting range – multi-turn: 2.5 to 8,000 turns, with resolution to 7.5° of actuator output.
   b. Position setting range – direct drive part turn actuators: 90° +/-10°, with resolution to 0.1° of actuator output.
   c. Torque setting: 40% to 100% rated torque.
2. Position measurement – Absolute position measurement should be incorporated within the actuator for modulating valves. The technology must be capable of reliably measuring position even in the case of a single fault. The design must be simple with the minimum amount of moving parts.
3. Measurement of torque for multi-turn actuators must be from direct measurement of force at the output of the actuator. Methods of determining torque-using data derived from the motor such as motor speed, current, flux etc. are only acceptable for part-turn actuators.
4. A means for automatic "torque switch bypass" to inhibit torque off during valve unseating and "latching" to prevent torque switch hammer under maintained or repeated control signals shall be provided.
5. The electrical circuit diagram of the actuator should not vary with valve type remaining identical regardless of whether the valve is to open or close on torque or position limit.

J. Travel switches shall be single pole, Double Throw (SPDT) Form C Type UL listed and CSA Approved 10A at 125 VAC.

K. Travel limit switches shall limit the actuator travel in both open and closed direction of travel.

L. Actuator travel limit switches shall be held in brackets for accurate and repeatable valve position feedback.

M. Auxiliary switches are required on each actuator to indicate travel position for remote customer control systems. All auxiliary switches shall be single pole, Double Throw (SPDT) Form C Type UL listed and CSA Approved 10A at 125 VAC.

N. Input signals shall be 4-20 mA.

O. Provide high visibility valve position indicator locally mounted on actuator.

P. Hand Operation
1. A handwheel must be provided for manual operation of the valve.
2. Hand operation shall be engaged when the motor is declutched by a lever or similar means, the drive being restored to electrical operation automatically by starting the motor.
3. The handwheel or selection lever must not move on restoration of motor drive. Provision shall be made for the hand/auto selection lever to be locked in both hand and auto positions.
4. It should be possible to select hand operation while the actuator is running or start the actuator motor while the hand/auto selection lever is locked in hand without damage to the drive train.
5. Clockwise operation of the handwheel must give closing movement of the valve unless otherwise stated in the data sheet. For linear valve types the actuator handwheel drive must be mechanically independent of the motor drive and should be such as to permit valve operation in a reasonable time with a manual force not exceeding 400N through stroke and 800N for seating/unseating of the valve.

Q. Local Controls
1. The actuator must incorporate local controls for Open, Close and Stop operation and a Local/Stop/Remote mode selector switch.
2. Mode selection must be lockable in any one of the following three positions: local control plus local stop only, stop (no electrical operation), remote control plus local stop only. It must be possible to select maintained or non-maintained local control.
3. The local controls shall be arranged so that the direction of valve travel can be reversed without the necessity of stopping the actuator.
4. The local controls and display shall be rotatable through increments of 90 degrees to suit valve and actuator orientation.

R. Remote Control Facilities
1. The necessary control, wiring and terminals must be contained within the actuator enclosure. Open and close external interlocks must be made available to inhibit local and remote valve opening / closing control. It must be possible to configure the interlocks to be active in remote control only.
2. Remote control signals fed from an internal 24VDC (or 110VAC) supply and/or from an external supply between 20V and 60VDC or 40V and 120VAC, must be suitable for any one or more of the following methods of control:
    a. Open, Close and Stop control
    b. Open and Close maintained or “push to run” (inching) control
    c. Overriding Emergency Shut-Down; to close (or open) valve from a normally closed or open contact

d. Two-wire control; energize to close (or open), de-energize to open (or close)

3. Additionally, provision shall be made for a separate 'drive enable' permissive input to prevent any unwanted electrical operation.
4. It must be possible to reverse valve travel without the necessity of stopping the actuator or moving through an intermediate stop control position. The motor starter must be protected from excessive current surges during rapid travel reversal. The internal circuits associated with the remote control and monitoring functions are to be designed to withstand simulated lightning impulses up to 2kV.
5. Operation by distributed control system must be possible using one or more of the following network systems:
    a. Profibus
    b. Modbus
    c. Foundation Fieldbus
    d. DeviceNet
    e. Pakscan
    f. HART

S. Commissioning Kit
1. Each actuator must be supplied with a start-up kit comprising installation instruction manual, electrical wiring diagram and cover seals to make good any site losses during the commissioning period.
2. Sufficient actuator commissioning tools shall be supplied to enable actuator set up and adjustment during valve/actuator testing and site installation commissioning.

T. Performance and Test Certificate
1. Each actuator must be performance tested by the manufacturer and individual test certificates are to be supplied free of charge. Test certificates must be retained by the manufacturer for the serviceable life of the product. The test certificate must include details of the equipment specification such as:
    a. Serial number
    b. Test date
    c. Manufacturing site address
    d. Customer
    e. Customer order number (where applicable)
    f. Actuator size
    g. Mounting flange
    h. Enclosure type
    i. Lubricant
    j. Paint coating
    k. Power supply
    l. Operating speed/time
    m. Drive close direction
    n. Gear ratio for second stage gearbox (where applicable)
    o. Electrical optional extras
    p. Catalogue performance
2. The test equipment should simulate a typical valve load. The following parameters must be recorded and clearly stated on the certificate:
    a. Torque at maximum torque setting in both directions
    b. Current at maximum torque setting in both directions
    c. Flash test statement
    d. Test power supply voltage

2.4 Valve Tagging and Identification:

A. Provide permanent plastic or metal identifying valve tags with valve numbers matching the drawings.

2.5 Bolts and Nuts for Flanged Valves:

A. Bolts and nuts for flanged valve shall be as described in the piping specifications.

2.6 Gaskets for Flanges:

A. Gaskets for flanged end valves shall be as described in the piping specification.

2.7 Painting and Coating:

A. Valves and actuators shall be factory painted and/or coated meeting the specifications outlined in Section 09 90 00.

2.8 Packing, O-Rings, and Gaskets:

A. Unless otherwise stated in the detailed valve specifications, packing, O-rings, and gaskets shall be one of the following non-asbestos materials and in compliance with NSF 61:
1. Teflon
2. Kevlar aramid fiber
3. Acrylic or aramid fiber bound by nitrile. products: Garlock "Bluegard", Klinger "Klingersil C4400", or equal
4. Buna-N (nitrile)

2.9 Valves:

A. Valves shall be supplied as indicated on the plans and in the valve list.

B. Flanged Butterfly Valves for Water Service – Open/Close

1. General Requirements:
   a. Butterfly valves shall be wafer or lug type, conforming to AWWA C504.
   b. Minimum working differential pressure across the valve disc shall be 250 psi.
   c. Velocity through open valves will be 10 fps.
   d. Valve shafts shall be Type 316 stainless steel.
   e. Valve shafts shall be stub shaft or one-piece units extending completely through the valve disc.
   f. Materials of construction shall be as follows:
2. Body:
   a. Cast Iron or Ductile Iron per ASTM A 48, Class 40; ASTM A 126, Class; or ASTM A 536, Grade 65-45-12.
3. Exposed Body, Caps, Screws, Bolts, Nuts
   g. Type 316 Stainless Steel per ASTM A 276
4. Discs
   a. Type 316 Stainless Steel per ASTM A 276
5. Internal Lining, Body, and Disc
   a. Buna-N or Teflon
6. Valves shall be Bray Series 31, Dezurik BOS, or approved Equal.

7. Trust Bearings for Butterfly Valves:
    a. Provide thrust bearings to hold the valve disc in the center of the valve seat.
    b. No bearings shall be mounted inside the valve body within the waterway.
    c. Do not use thrust bearings in which a metal bearing surface on the disc rubs in contact with an opposing metal surface on the inside of the body.
8. Corrosion-Resistant Materials in Butterfly Valves:
    a. Where AWWA C504 (Subsections 3.5, 3.6, and 3.7) requires "corrosion resistant" material, such material shall be Type 316 stainless steel.

C. Flanged Butterfly valves for Water Service – Flow Regulating
1. Body:
    a. Valve Bodies shall be constructed of Carbon Steel ASTM 216 Grade WCB or 316 Stainless Steel ASTM A351 Grade CF8M.
    b. The valve body shall be cast lugged or wafer configurations with a minimum of four guide holes
2. Disc:
    a. Disc shall be an offset design to provide uninterrupted 360° sealing.
    b. Discs shall be designed with a concave face to minimize dynamic torque, decrease turbulence, and maximize flow capacity.
    c. Discs shall be 316 stainless steel ASTM A351 Grade CF8M.
3. Seat:
    a. Valve Seats shall be pressure assisted PTFE or RTFE capable of drip-tight bi-directional and dead-end shutoff.
    b. A hoop, integral to the seat, made of Titanium shall provide memory for low pressure sealing and high cycle service.
    c. Seat design shall be pressure assisted and mechanical seat-to-disc sealing features shall meet ANSI/FCI 70-2 Class VI shutoff.
4. Shaft:
    a. ASME Class 150 valves shall provide bubble-tight shutoff to 285 psi (1960 kPa).
    b. Disc-to-shaft connection shall be subject to compression forces only through the use of a tangential pin or torque plugs. Designs using shear or through-pin connections are not allowed.
    c. All valves shall have a blow-out proof shaft connection. Valve Shaft shall be a one-piece design and shall be centerless ground to minimize bearing and packing wear.
    d. Shaft material shall be 2205 Duplex Stainless Steel ASTM A479.
5. Packing:
    a. Adjustable Packing shall be multiple v-ring PTFE or braided carbon graphite including antiextrusion ring.
    b. Valve shall also permit inspection, adjustment or complete replacement of packing without disturbing any part of the valve or actuator assembly except the packing follower.
    c. Testing Each valve and valve actuator shall be assembled, adjusted, and tested as a unit by the valve manufacturer.
6. Valve shall meet the seat/shell test leakage rate requirements of API 598. Valves shall be NSF/ANSI-61, 371 certified lead-free for drinking water when specified with NSF option. Certified Test Report shall include material certifications for pressure retaining components, low and high pressure seat leakage test per ANSI/FCI 70-2. Test reports shall be kept on file by the manufacturer, for a period of three years from the date of manufacture.

D. Grooved Butterfly Valves in Low Pressure Air Service
   1. Butterfly Valves: 2” - 8”
      a. 300 psi (2068 kPa CWP), suitable for bi-directional and dead-end service to full rated pressure.
      b. Grooved end stainless steel body and disc, grade CF8M, conforming to ASTM A351, with blow-out proof 17-4PH stainless steel stems to ASTM A564
      c. Disc shall be connected to the stem without the use of fasteners or pins and be offset from the disc centerline to provide a full 360° continuous contact with the seating surface when closed.
      d. Seat shall be pressure responsive, EPDM or lubricated Nitrile. Stem seals shall be of the same material as the seats.
      e. Valve shall have standard ISO flange mounting for ease of actuation.
      f. Valve provided with lever handle or gear operator as required. The handle shall be zinc-plated carbon steel or fully stainless steel, latch lock type with infinitely variable and memory stop features.
      g. Manufacturer – Victaulic Series 461 Vic-300 MasterSeal Valve or approved equal.
   2. Butterfly Valves:
      a. Grade CF8M stainless steel body and disc
      b. 316 stainless steel stem, PTFE impregnated glass fabric bearings with 316 stainless steel backing, with synthetic rubber seal. (Grade to suit the intended service.)
      c. Valve stem shall be offset from the disc centerline to provide full 360-degree circumferential seating.
      d. Bubble-tight, dead-end or bi-directional service to 300 psi (2065 kPa) CWP.
      e. Victaulic Series 763 or approved equal.

E. Ball Valves:
   1. Double Union PVC Ball Valves 3 Inches and Smaller:
      a. Thermoplastic ball valves for water and chemical service shall be rated at a pressure of 150 psi at a temperature of 105°F (Schedule 80). Body, ball, and stem shall be PVC conforming to ASTM D 1784, Type 1, Grade 1. Seats shall be Teflon. O-ring seals shall be Viton, except as noted below. Valve ends shall be of the double-union design. Ends shall be socket welded except where threaded or flanged-end valves are specifically shown on the plans. Valves shall be as manufactured by Chemtrol, Hayward, R&G Sloan, Spears, or equal.
      b. Ball valves used in hypochlorite service shall be factory vented. Field venting of ball valves is not permitted.
      c. Ball valves used in sodium hydroxide service shall have EPDM O-rings. All EPDM valves shall be certified by NSF-61 for use with potable water.
   2. Polyethylene Ball Valves
      a. Polyethylene ball valves are approved in chemical service for lines 2” and smaller. All valves shall be NSF61 certified.
      b. Valve Body: PVDF per ASTM D3222 Type 1 or natural polypropylene ASTM D4101
      c. Seals: EPDM
      d. Connection: True Union with threaded or socket weld ends.
      e. Pressure / Temperature rating: 150 psi @ 73 °F
      f. Hayward TC series True Union ball check valve or approved equal
   3. Ductile Iron Ball Valves, Class 150, 4 inch
      a. Ductile Iron Ball Valves for filter backwash and wastewater service shall be rated at a pressure of 150 psi at a temperature of 100°F (CWP). Valve shall be manufactured in accordance with standard MSS SP-72. Valve shall be split body

design. Body material shall be ASTM A536 65-45-12, ductile iron. Valve ends shall be flanged, seats shall be PTFE, stem shall be stainless steel, and ball shall be PFA infused stainless steel. Valve opening shall be full port. Valve shall comply with NSF 61 and 372. Valve shall have a mounting pad compliant with ISO 5211 for actuation.

b. 4" Ductile Iron Ball Valve for filter backwash and wastewater service shall be American Valve, Inc., Model 4000D or equal.

4. Stainless Steel Ball Valves
   a. Stainless steel ball valves 2" and smaller used in water service shall be rated for 1000 psig cold non-shock pressure. Stainless steel ball valves stem packing shall be MTPFE, stem bearing shall be RPTFE, and seats shall be RPTFE. Ball, gland, and stem shall be A276-316 stainless steel. Lever nut shall be 304 stainless steel. Body seal shall be RPTFE.
   b. Ball valves 2" and smaller shall have vinyl coated stainless steel lever grip operators.
   c. Stainless steel ball valve opening shall be full port.
   d. Stainless steel ball valves shall be Apollo 76F full port ball valve (or equal).
5. Flanged, Full Port Steel Body Ball Valves:
   a. Full port slot vented ball valve with flanged ends in sizes 3" and above.
   b. Body Materials: carbon steel.
   c. Pressure rating: ASME class 150.
   d. EPDM seals, RTFE seat.
   e. Apollo 200 series full port ball or approved equal
6. Ball Valves in Low Pressure Air Service
   a. Grade CF8M stainless steel body,
   b. 316 stainless steel ball and stem,
   c. TFE seats,
   d. Fluoroelastomer seals,
   e. Standard port,
   f. Two-piece valve.
   g. Victaulic Series 726S.

F. Check Valves:

1. PVC Ball Check Valves:
   a. PVC check valves, 4 inches and smaller, shall be constructed of PVC per ASTM D 1784, Type I, Grade 1. Ends shall be double union, socket welded. Seats shall be Viton, except as noted below. Valve shall have a pressure rating of 150 psi at a temperature of 75°F. Valves shall be as manufactured by Chemtrol, Hayward, R&G Sloan, Spears, or equal.
   b. PVC check valves used in sodium hydroxide service shall have EPDM O-rings and seats. All EPDM valves shall be certified by NSF-61 for use with potable water.
2. Steel double-disk check valves:
   a. Body materials: carbon steel, 304 stainless steel, or ductile iron to match pipe materials. Valves installed in PVC lines shall be 304 SS.
   b. Pressure rating: ASME Class 150
   c. Connections: wafer or ASME class 150 flanged
   d. Apollo 9000T, Apco CDD, or approved equal.
3. Silent Check Valves
   a. Body materials: carbon steel, 304 stainless steel, or ductile iron to match pipe materials. Valves installed in PVC lines shall be 304 SS.

b. Connections: wafer or ASME class 150 flanged
c. Pressure rating: ASME Class 150
d. Apco CSC or approved equal.

4. Polyethylene Check Valve
   a. Polyethylene check valves are approved in chemical service for lines 2” and smaller. All valves shall be NSF61 certified.
   b. Valve Body: natural polypropylene ASTM D4101
   c. Seals: EPDM
   d. Connection: True Union with threaded or socket weld ends.
   e. Pressure / Temperature rating: 150 psi @ 73 °F
   f. Hayward TC series True Union ball check valve or approved equal.
5. Grooved End Check Valves in Low Pressure Air Service
   a. Sizes: 2” - 6” (50 - 150 mm): 300 psi (2068 kPa CWP),
   b. Grooved end Grade CF8M stainless steel body and disc, 17-4PH stainless steel shaft, with 17-4PH or 316 stainless steel spring, and EPDM seat
   c. Valve shall be suitable for vertical or horizontal installation.
   d. Victaulic Series 416 with OGS (original grooved system) Ends, or E416 with StrengThin™ 100 Ends or approved equal.
6. Flanged End Check Valves in Low Pressure Air Service
   a. Body materials: 304 stainless steel,
   b. Pressure rating: ASME Class 150
   c. Connections: wafer or ASME class 150 flanged
   d. Apco CDD or approved equal.

G. Three Way Valves

1. PVC Three Way Valves
   a. All thermoplastic Three-Way Ball valves shall be Horizontal, Full Port Ball Valves manufactured to ASTM F 1970 and constructed from PVC Type I, ASTM D 1784 Cell Classification 12454, or CPVC Type IV, ASTM D 1784 Cell Classification 23447. All O-rings shall be EPDM or FKM. All valves shall have Safe-T-Shear® stem with double O-ring stem seals. All valve handles shall be polypropylene with built-in lockout mechanism. All valve union nuts shall have Buttress threads. All seal carriers shall be Safe-T-Blocked®. All valve components shall be replaceable Valves shall be as manufactured by Chemtrol, Hayward, R&G Sloan, Spears, or equal.
   b. Three-Way Ball valves used on peristaltic metering pumps skids shall be provided by the skid supplier. Three-way ball valve ports shall be supplied as required for skid operation.
   c. Thermoplastic Three-Way ball valves used in sodium hydroxide service shall have EPDM O-rings. All EPDM valves shall be certified by NSF International for use in potable water service.

H. Segmented Ball Valves in Modulating Control Service
1. Backwash EQ Basin Effluent Control Valve (FV-603A/B)
   a. Body
      1) One-piece casting or reduced weight, rigidity, and eliminated leak paths. Body shall be designed per ASME B16.34
      2) Flanged body face-to-face dimensions per ASME B16.10 or ISA 75.08.02
      Materials: ASTM A351 CF8M (316L Stainless Steel) with internal bore hard coating.

b. Segmented Ball
   1) Shall be a one-piece casing
   2) Shall contain a precision machined, splined segment to stem connection
   3) Shall contain a shaft pin connection to stem for self-alignment
   4) Shall be designed with sharp leading edge for use in viscous media
   5) Materials: ASTM A351 CF8M (316L Stainless Steel) with hard chrome plating
c. Stem
   1) Shall be a one-piece design.
   2) Shall be blowout proof design
   3) Shall contain precision machined, splined stem to segment connection
   4) Shall contain through hole for shaft pin connection to segment.
   5) Shall contain method for position indication.
   6) Materials: 17-4 PH Stainless Steel
d. Seat:
   1) Seat shall contain pressure balanced designed capable of sealing against full differential pressure.
   2) Seat shall contain seat springs to provide constant contact resistance
   3) Seat shall contain seat springs to provide constant contact with segment for sealing at low differential pressure and to act as a scraper, wiping debris from segment.
   4) Seat shall be offered only in metal design for use in erosive, severe service slurry applications.
   5) Metal seat shall provide Class IV ANSI shutoff rating.
   6) Materials: Stellite 6 welded overlay
   7) Seat shall be replaceable by removing the flanged liner retainer and may do so without removing the segment or shaft. >
   8) Seat seals shall be PTFE
e. Connections:
   1) ANSI B16.1 flanged class 150.
   2) Flanges shall be Flat-Faced And be suitable for connection to AWWA C115 ductile iron flanges.
   3) Flange isolation kits shall be used for connections between dissimilar metals.
f. Bore Liner:
   1) The segmented ball valve shall be designed with a replaceable downstream bore liner for protection against abrasion and erosion.
   2) The bore liner shall be rotatable and replaceable for easy field maintenance and low cost of ownership.
   3) The liner shall be replaceable through the flanged liner retainer that is mounted to the valve end flange.
   4) The bore liner shall be constructed of ultra-hard materials to prevent body wall erosion due to high velocity, abrasive flow at low openings. The liner material shall be per the manufacturer's recommendation for wastewater service.
g. Packing and Bearings:
   1) Shall be provided with maintenance free stem and end post bearings for smooth operation and reduced operating torque.
   2) Stem bearings shall be wear-resistant 316 stainless steel fabric, impregnated with PTFE.

3) Bearing seals shall be offered in PTFE for standard temperature applications Valve utilize upper and lower bearing seals to protect bearings from ingress of media in abrasive applications.
4) Shall contain an externally adjustable stem packing with packing gland, designed to adjust the compression on the stem packing to prevent leaks and extend the life of the packing seal.
5) Adjustable packing gland shall be designed to prevent galling of the packing box in the event of unequal loading of the packing gland studs.
6) Shall be able to adjust the stem packing without removing the actuator
7) Standard packing shall be a combination of PTFE and Carbon Fiber rings.

h. Backwash EQ Basin Effluent Control Valve (FV-603A/B) shall be Bray Series S19L Segmented Ball valve or equal.

I. Air Release Valves:

1. PVC Automatic Air Release Valves:
   a. PVC (ASTM D1784) body with True Union solvent welded or threaded inlet and screened outlet for valves without outlet piping.
   b. Polypropylene ball, ASTM D4101
   c. EPDM Seals.
   d. NSF61 certified for potable water use.
   e. Hayward AR series or approved equal.
2. Steel Automatic Combination Air Release / Vacuum Breaker Valves:
   a. Steel combination air release / vacuum breaker valves in wastewater service
   b. 2” and larger.
   c. Body materials: carbon steel with epoxy paint coating applied at the factory.
   d. Seat: resilient material.
   e. Float: 304 SS
   f. DeZurik / Apco single body model ASC or approved equal.

J. Buried Ductile Iron Gate Valves:

1. Mechanical Joint Gate valves.
   a. Resilient Wedge
   b. Gate valves shall meet or exceed all applicable requirements of current revision ANSI/AWWA C515. They shall be UL listed, FM approved and certified to ANSI/NSF 61 and 372.
   c. Valves shall have an AWWA/UL/FM 350 psig working pressure rating. Each valve shall be factory seat tested to 525 psig and shell tested to 700 psig. Valve ends shall be as specified on the valve list.
   d. Valve shall be non-rising stem.
   e. Valves shall have an arrow cast on the operating nut showing the opening direction. Direction of opening shall counterclockwise.
   f. Valve shall be provided with a 2” square operating nut. The bolt that attaches the operating nut to the stem shall be recessed into the operating nute so as not to interfere with valve wrench operation. Bolt shall be stainless steel.
   g. Valves shall have Type 316 stainless steel bolts and nuts for stuffing box and bonnet.
   h. Valve stems shall have “anti-friction” thrust washers, one above and one below the stem thrust collar to reduce operating torque. Valve stem design shall be such that if excessive torque is applicated, stem failure shall occur above the stuffing box at such a point as to enable operation of the valve with a pipe wrench or other readily available tool.

i. Valve stems shall be made of bronze ASTM B138 alloy C67600 H04 hard bar stock material. The bronze stem collar is to be hot forge upset; collars not integral with the stem are not acceptable. The stem material shall provide a minimum 73,000 psi tensile strength, yield strength of 48,000 psi and 8% minimum elongation. Optional bronze stems materials may be ASTM B98 alloy C66100 H02 (half hard). Optional stainless steel stems may be hot forge upset or machined from bar stock in the following grades:

j. Valves shall have a stuffing box with bolts in line with flow and be O-ring sealed. Stuffing box shall have two integrally cast lifting lugs. Two O-rings shall be placed above and one O-ring below the stem thrust collar. The thrust collar shall be factory lubricated. The thrust collar and its lubrication shall be isolated by the O-rings from the waterway and from outside contamination providing permanent lubrication for long term ease of operation. Valves without a stuffing box are unacceptable. Valves without at least three stem O-rings are also unacceptable.

k. The valve body, bonnet, stuffing box and operating nut shall be composed of ASTM A536 ductile iron. The body and bonnet shall adhere to the minimum wall thickness as set forth in AWWA C515-09 Table 2, section 4.4.1.2. Wall thicknesses that do not meet AWWA minimums are not acceptable.

l. The valve disc and guide lugs shall be composed of ASTM A126 Class B or ASTM A536 ductile iron and fully encapsulated in SBR ASTM D2000 rubber. Guide caps of an acetal bearing material shall be placed over solid guide lugs to prevent abrasion and to reduce the operating torque. Guide lugs placed over bare metal are not acceptable. EPDM ASTM D2000 shall be available as an option.

m. Valves shall have all internal and external ferrous surfaces coated with a fusion bonded thermosetting powder epoxy coating of 10 mils nominal thickness. The coating shall conform to AWWA C550.

n. Valves shall be warranted by the manufacturer against defects in materials or workmanship for a period of ten (10) years from the date of manufacture. The manufacturing facility for the valves must have current ISO certification.

o. NRS valves shall be Mueller A2361 series or approved equal.

K. Pressure Reducing Valves:

1. Backwash Supply Pressure Reducing Valve (PRV-308)

a. Pressure Reducing with Solenoid Shutoff: The Pressure Reducing & Solenoid Shutoff Valve shall be a diaphragm actuated, line pressure operated, pilot-controlled valve, certified to NSF/ANSI Standards 61 and 372. The pilot system shall consist of a direct-acting, normally open, spring-loaded diaphragm actuated pressure reducing pilot, a wye-strainer, isolating valves, inlet and outlet pressure gauges and a 120VAC solenoid to close the main valve on electrical signal. Unless otherwise specified, the reduced pressure shall be field adjustable from 15 to 150 PSI.

b. The Pressure Reducing Valve with Solenoid Shutoff shall be GA Industries Figure 5455 or approved equal.

L. Pressure Regulating Valves

1. Thermoplastic Pressure Regulating Valves

a. Back pressure regulating valves in chemical service:

1) Body materials: PVD, ASTM D1784
2) Pressure rating: 150 psi @ 70°F
3) EPDM Diaphragm
4) 304 SS hardware and spring

5) True Union ends.
6) Hayward PBV Series or approved equal.

b. Pressure regulating valves in chemical service:
1) Body materials: PVD, ASTM D1784
2) Pressure rating: 150 psi @ 70°F
3) EPDM Diaphragm
4) 304 SS hardware and spring
5) True Union ends.
6) Hayward PR Series or approved equal.

M. Pressure Safety Valves

1. Pressure Safety Valves in Low Pressure Air Service (PSV-610)
   a. Cast iron, non-code or ASME Section VIII, air pressure relief valve for low to medium pressure high volume blowers.
   b. Stainless steel, NPT connections.
   c. Stainless steel disc, nozzle, and spring.
   d. Field adjustable and testable.
   e. Vendor must check size according to the blower equipment provided by contractor. Basis of design sizing is 2” inlet, 2” outlet, 2.786 square-inch orifice area, for a setpoint of 10 psig.
   f. Basis of design: Emerson Kunkle model 337.
2. Chemical Metering Pump Skid Pressure Safety Valves
   a. Chemical metering pump pressure safety valves (pressure relief valves) shall be PVC body with a PTFE primary diaphragm seal.
   b. Non-wetted components: EPDM secondary seal, zinc plated steel spring, stainless steel external hardware, HDPE pressure adjustment screw.
   c. Pressure safety valve shall have leak-free connections.
   d. Pressure safety valve shall have an infinite adjustment, field adjustable setpoint between 10-150 psi. Set point shall be 90 psig.

PART 3 - EXECUTION

3.1 Joints:

A. Bolt holes of flanged valves shall straddle the horizontal and vertical centerlines of the pipe run to which the valves are attached. Clean flanges by wire brushing before installing flanged valves. Clean flange bolts and nuts by wire brushing, lubricate threads with oil and graphite, and tighten nuts uniformly and progressively. If flanges leak under pressure testing, loosen or remove the nuts and bolts, reseat or replace the gasket, reinstall or retighten the bolts and nuts, and retest the joints. Joints shall be watertight.

B. Clean threaded joints by wire brushing or swabbing. Apply Teflon joints compound or Teflon tape to pipe threads before installing threaded valves. joints shall be watertight.

3.2 Installing Valves:

A. Install valves in horizontal runs of pipe having centerline elevations 4'-6" or less above the floor with their operating stems vertical. Install valves in horizontal runs of pipe having centerline elevations between 4'-6" and 6'-9" above the floor with their operating stems horizontal.

B. Install valves on vertical runs of pipe that are next to walls with their stems horizontal, away from the wall. Valves on vertical runs of pipe that are not located next to walls shall be installed with their stems horizontal, oriented to facilitate valve operation.

3.3 Mounting Gear Operators:

A. The valve manufacturer shall select and mount the gear actuator and accessories on each valve and stroke the valve from fully open to fully closed prior to shipment. For existing valves, the Contractor shall install the actuator per manufacturer's instructions and verify all bolts are torqued per specifications. Verify smooth operation of the valve is possible with the handwheel and the actuator. If any hesitation is noted, verify valve to piping flange bolts are properly torqued (a common error is over-torqued bolts in lug style butterfly valves).

3.4 Field Installation of Gear Actuator:

A. Provide the actuator manufacturer's recommended lubricating oil in each actuator before commencing the field testing.

3.5 Valve Leakage Testing:

A. Test valves for leakage at the same time that the connecting pipelines are tested. See Section 33 05 05 for pressure testing requirements. Protect or isolate any parts of valves, actuators, or control and instrumentation systems whose pressure rating is less than the pressure test. Valves shall show zero leakage. Repair or replace any valves and retest.

3.6 Valve Field Testing:

A. Operate manual valves through 10 full cycles of opening and closing. Valves shall operate from full open to full close without sticking or binding. If valves stick or bind, repair or replace the valve and repeat the tests.

B. Gear actuators shall operate valves from full open to full close through 10 cycles without binding or sticking. The pull required to operate handwheel - or chainwheel - operated valves shall not exceed 80 pounds. The torque required to operate valves having 2-inch AWWA nuts shall not exceed 150 ft-lbs. If actuators stick or bind or if pulling forces and torques exceed the values stated previously, repair or replace the actuators and repeat the tests. Operators shall be fully lubricated in accordance with the manufacturer's recommendations prior to operating.

END OF SECTION

CONTROL VALVE LIST

DOWL Project No.:	50206.01	Revision:	A
Stanley Project No:		Date:	4/10/2023
Client:	CBW	By:	GP
Location:	Wrangell, AK	Checked:	

Valve Number	Name	Line / Equip. Number	On Project P&ID	Size (in)	Body Type	End Type	Control Function	Actuation	Fail Position	Valve Man/Model	Actuator Man/Model	Supplied By	Comments
Pressure Reducing Valves													
02-PCV-131	Saturator 1 Compressed Air Pressure Control	02-SAT-125	PI05	1/2"	Regulator Valve	FNPT, 150#	PRV	N/A	N/A	SMC AR40	N/A	AWC	See AWC Document 17806-IC-DAS-027
02-PCV-231	Saturator 2 Compressed Air Pressure Control	02-SAT-225	PI07	1/2"	Regulator Valve	FNPT, 150#	PRV	N/A	N/A	SMC AR40	N/A	AWC	See AWC Document 17806-IC-DAS-027
02-PCV-331	Saturator 3 Compressed Air Pressure Control	02-SAT-325	PI09	1/2"	Regulator Valve	FNPT, 150#	PRV	N/A	N/A	SMC AR40	N/A	AWC	See AWC Document 17806-IC-DAS-027
PRV-308	Backwash Supply Pressure Reducing Valve	8"-PVC80-PW-303	PI12	8"	Globe	FL, 150#	PRV	Pilot-Operated, Diaphragm Actuated	CLOSED	CLA-VAL 90-01, SS, 2-30 PSIG, X101	TBD	CONTRACTOR	See Specifications
PRV-700	OSHG Brine Tank Fill Presure Reducing Valve	1/4"-PE-SW-707	PI26	1/4"	Globe	TBD	PRV	Direct-Acting	N/A	Hayward PBV or Approved Equal	N/A	CONTRACTOR	See Specifications
FV-705	OSHG 1 Control Valve	EC-701 (SKID)	PI27	1/2"	TBD	TBD	TBD	TBD	TBD	OSHG VENDOR PACKAGE	OSHG VENDOR PACKAGE	CONTRACTOR	See OSHG Shop Drawings
FV-709	OSHG 2 Control Valve	EC-702 (SKID)	PI29	1/2"	TBD	TBD	TBD	TBD	TBD	OSHG VENDOR PACKAGE	OSHG VENDOR PACKAGE	CONTRACTOR	See OSHG Shop Drawings
Electric Rotary Motor													
01-FV-014	Raw Water Inlet Flow Control Valve	8"-PVC80-RW-101	PI03	8"	Dual Seat Butterfly Valve	FL, 125/150	Modulating	Electric Rotary Motor	CLOSED	DEZURIK BHP	Rotork IQ Series	CONTRACTOR	See Specifications
02-XV-104	DAF 1 Inlet Flow Control	10"-PVC80-RW-102 (02-TK-102)	PI04	10"	Butterfly Valve, AWWA	FL, 125/150	O/C	Electric Rotary Motor	CLOSED	Dezurik BAW	Rotork 1Q1000FA12	AWC	SEE AWC Document 17805-IC-DAS-002
02-XV-125	Saturator 1 Outlet Flow Control	4"-PVC80-CW-205	PI05	4"	Butterfly Valve, AWWA	FL, 125/150	O/C	Electric Rotary Motor	LAST	Dezurik BAW	Rotork IQT250FA10	AWC	See AWC Document 17805-IC-DAS-008
02-XV-204	DAF 2 Inlet Flow Control	10"-PVC80-RW-103 (02-TK-202)	PI06	10"	Butterfly Valve, AWWA	FL, 125/150	O/C	Electric Rotary Motor	CLOSED	Dezurik BAW	Rotork 1Q1000FA12	AWC	SEE AWC Document 17805-IC-DAS-002
02-XV-225	Saturator 2 Outlet Flow Control	4"-PVC80-CS-211	PI07	4"	Butterfly Valve, AWWA	FL, 125/150	O/C	Electric Rotary Motor	LAST	Dezurik BAW	Rotork IQT250FA10	AWC	See AWC Document 17805-IC-DAS-008
02-XV-304	DAF 3 Inlet Flow Control	10"-PVC80-RW-104 (02-TK-302)	PI08	10"	Butterfly Valve, AWWA	FL, 125/150	O/C	Electric Rotary Motor	CLOSED	Dezurik BAW	Rotork 1Q1000FA12	AWC	SEE AWC Document 17805-IC-DAS-002
02-XV-325	Saturator 3 Outlet Flow Control	4"-PVC80-CW-215	PI09	4"	Butterfly Valve, AWWA	FL, 125/150	O/C	Electric Rotary Motor	LAST	Dezurik BAW	Rotork IQT250FA10	AWC	See AWC Document 17805-IC-DAS-008
03-LV-146A	Filter 1 Filtered Water Control	6"-PVC80-FW-302	PI10	6"	Butterfly Valve, AWWA	FL, 125/150	Modulating	Electric Rotary Motor	CLOSED	Dezurik BAW	Rotork IQT500FA10	AWC	SEE AWC Document 17805-IC-DAS-005
03-XV-147	Filter 1 Backwash Control	12"-PVC80-PW-303	PI10	12"	Butterfly Valve, AWWA	FL, 125/150	O/C	Electric Rotary Motor	CLOSED	Dezurik BAW	Rotork IQT1000FA12	AWC	See AWC Document 17805-IC-DAS-007
03-XV-140	Filter 1 Inlet Flow Control	03-TK-140	PI10	6"	Butterfly Valve, AWWA	FL, 125/150	O/C	Electric Rotary Motor	LAST	Dezurik BAW	Rotork 1QT500FA10	AWC	SEE AWC Document 17805-IC-DAS-003
03-XV-142	Filter 1 Air Scour Control	03-TK-140	PI10	6"	Butterfly Valve, AWWA	FL, 125/150	O/C	Electric Rotary Motor	LAST	Dezurik BAW	Rotork 1QT500FA10	AWC	See AWC Document 17805-IC-DAS-004
03-LV-146B	Filter 1 Filter to Waste Control	6"-PVC80-FTW-301	PI10	6"	Butterfly Valve, AWWA	FL, 125/150	O/C	Electric Rotary Motor	CLOSED	Dezurik BAW	Rotork IQT500FA10	AWC	See AWC Document 17805-IC-DAS-006
03-LV-166A	Filter 2 Filtered Water Control	6"-PVC80-FW-305	PI11	6"	Butterfly Valve, AWWA	FL, 125/150	Modulating	Electric Rotary Motor	CLOSED	Dezurik BAW	Rotork IQT500FA10	AWC	SEE AWC Document 17805-IC-DAS-005
03-XV-167	Filter 2 Backwash Control	12"-PVC80-FW-303	PI11	12"	Butterfly Valve, AWWA	FL, 125/150	O/C	Electric Rotary Motor	CLOSED	Dezurik BAW	Rotork IQT1000FA12	AWC	See AWC Document 17805-IC-DAS-007
03-XV-160	Filter 2 Inlet Flow Control	03-TK-160	PI11	6"	Butterfly Valve, AWWA	FL, 125/150	O/C	Electric Rotary Motor	LAST	Dezurik BAW	Rotork 1QT500FA10	AWC	SEE AWC Document 17805-IC-DAS-003
03-XV-162	Filter 2 Air Scour Inlet	03-TK-160	PI11	6"	Butterfly Valve, AWWA	FL, 125/150	O/C	Electric Rotary Motor	LAST	Dezurik BAW	Rotork 1QT500FA10	AWC	See AWC Document 17805-IC-DAS-004
03-LV-166B	Filter 2 Filter to Waste Control	6"-PVC80-FTW-304	PI11	6"	Butterfly Valve, AWWA	FL, 125/150	O/C	Electric Rotary Motor	CLOSED	Dezurik BAW	Rotork IQT500FA10	AWC	See AWC Document 17805-IC-DAS-006
03-LV-186A	Filter 3 Filtered Water Control	6"-PVC80-FW-307	PI12	6"	Butterfly Valve, AWWA	FL, 125/150	Modulating	Electric Rotary Motor	CLOSED	Dezurik BAW	Rotork IQT500FA10	AWC	SEE AWC Document 17805-IC-DAS-005
03-XV-187	Filter 3 Backwash Control	12"-PVC80-PW-303	PI12	12"	Butterfly Valve, AWWA	FL, 125/150	O/C	Electric Rotary Motor	CLOSED	Dezurik BAW	Rotork IQT1000FA12	AWC	See AWC Document 17805-IC-DAS-007
03-XV-180	Filter 3 Inlet Flow Control	03-TK-180	PI12	6"	Butterfly Valve, AWWA	FL, 125/150	O/C	Electric Rotary Motor	LAST	Dezurik BAW	Rotork 1QT500FA10	AWC	SEE AWC Document 17805-IC-DAS-003
03-XV-182	Filter 3 Air Scour Inlet Control Valve	03-TK-180	PI12	6"	Butterfly Valve, AWWA	FL, 125/150	O/C	Electric Rotary Motor	LAST	Dezurik BAW	Rotork 1QT500FA10	AWC	See AWC Document 17805-IC-DAS-004
03-LV-186B	Filter 3 Filter to Waste Control	6"-PVC80-FTW-306	PI12	6"	Butterfly Valve, AWWA	FL, 125/150	O/C	Electric Rotary Motor	CLOSED	Dezurik BAW	Rotork IQT500FA10	AWC	See AWC Document 17805-IC-DAS-006
03-XV-196	Backwash Supply Control Valve	8"-PVC80-PW-303	PI12	8"	Dual Seat Butterfly Valve	FL, 125/150	Modulating	Electric Rotary Motor	CLOSED	DEZURIK BHP	Rotork IQ Series	CONTRACTOR	See Specifications
03-LV-246A	Filter 4 Filtered Water Control	03-TK-240	PI13	6"	Butterfly Valve, AWWA	FL, 125/150	Modulating	Electric Rotary Motor	CLOSED	Dezurik BAW	Rotork IQT500FA10	AWC	SEE AWC Document 17805-IC-DAS-005
03-XV-247	Filter 4 Backwash Control	12"-PVC80-PW-316	PI13	12"	Butterfly Valve, AWWA	FL, 125/150	O/C	Electric Rotary Motor	CLOSED	Dezurik BAW	Rotork IQT1000FA12	AWC	See AWC Document 17805-IC-DAS-007
03-XV-240	Filter 4 Inlet Flow Control	03-TK-240	PI13	6"	Butterfly Valve, AWWA	FL, 125/150	O/C	Electric Rotary Motor	LAST	Dezurik BAW	Rotork 1QT500FA10	AWC	SEE AWC Document 17805-IC-DAS-003
03-XV-242	Filter 4 Air Scour Inlet	03-TK-240	PI13	6"	Butterfly Valve, AWWA	FL, 125/150	O/C	Electric Rotary Motor	LAST	Dezurik BAW	Rotork 1QT500FA10	AWC	See AWC Document 17805-IC-DAS-004
03-LV-246B	Filter 4 Filter to Waste Control	6"-PVC80-FTW-308	PI13	6"	Butterfly Valve, AWWA	FL, 125/150	O/C	Electric Rotary Motor	CLOSED	Dezurik BAW	Rotork IQT500FA10	AWC	See AWC Document 17805-IC-DAS-006
03-LV-266A	Filter 5 Filtered Water Control	03-TK-260	PI14	6"	Butterfly Valve, AWWA	FL, 125/150	Modulating	Electric Rotary Motor	CLOSED	Dezurik BAW	Rotork IQT500FA10	AWC	SEE AWC Document 17805-IC-DAS-005

DOWL Stanley Consultants INC.

CONTROL VALVE LIST

DOWL Project No.:	50206.01	Revision:	A
Stanley Project No:		Date:	4/10/2023
Client:	CBW	By:	GP
Location:	Wrangell, AK	Checked:	

Valve Number	Name	Line / Equip. Number	On Project P&ID	Size (in)	Body Type	End Type	Control Function	Actuation	Fail Position	Valve Man/Model	Actuator Man/Model	Supplied By	Comments
03-XV-267	Filter 5 Backwash Control	12"-PVC80-PW-317	PI14	12"	Butterfly Valve, AWWA	FL, 125/150	O/C	Electric Rotary Motor	CLOSED	Dezurik BAW	Rotork IQT1000FA12	AWC	See AWC Document 17805-IC-DAS-007
03-XV-260	Filter 5 Inlet Flow Control	03-TK-260	PI14	6"	Butterfly Valve, AWWA	FL, 125/150	O/C	Electric Rotary Motor	LAST	Dezurik BAW	Rotork 1QT500FA10	AWC	SEE AWC Document 17805-IC-DAS-003
03-XV-262	Filter 5 Air Scour Inlet	03-TK-260	PI14	6"	Butterfly Valve, AWWA	FL, 125/150	O/C	Electric Rotary Motor	CLOSED	Dezurik BAW	Rotork IQT500FA10	AWC	See AWC Document 17805-IC-DAS-006
03-LV-266B	Filter 5 Filter to Waste Control	6"-PVC80-FTW-310	PI14	6"	Butterfly Valve, AWWA	FL, 125/150	O/C	Electric Rotary Motor	LAST	Dezurik BAW	Rotork 1QT500FA10	AWC	See AWC Document 17805-IC-DAS-004
03-LV-286A	Filter 6 Filtered Water Control	03-TK-280	PI15	6"	Butterfly Valve, AWWA	FL, 125/150	Modulating	Electric Rotary Motor	CLOSED	Dezurik BAW	Rotork IQT500FA10	AWC	SEE AWC Document 17805-IC-DAS-005
03-XV-287	Filter 6 Backwash Control	12"-PVC80-PW-318	PI15	12"	Butterfly Valve, AWWA	FL, 125/150	O/C	Electric Rotary Motor	CLOSED	Dezurik BAW	Rotork IQT1000FA12	AWC	See AWC Document 17805-IC-DAS-007
03-XV-280	Filter 6 Inlet Flow Control	03-TK-280	PI15	6"	Butterfly Valve, AWWA	FL, 125/150	O/C	Electric Rotary Motor	LAST	Dezurik BAW	Rotork 1QT500FA10	AWC	SEE AWC Document 17805-IC-DAS-003
03-XV-282	Filter 6 Air Scour Inlet	03-TK-280	PI15	6"	Butterfly Valve, AWWA	FL, 125/150	O/C	Electric Rotary Motor	LAST	Dezurik BAW	Rotork 1QT500FA10	AWC	See AWC Document 17805-IC-DAS-004
03-LV-286B	Filter 6 Filter to Waste Control	6"-PVC80-FTW-312	PI15	6"	Butterfly Valve, AWWA	FL, 125/150	O/C	Electric Rotary Motor	CLOSED	Dezurik BAW	Rotork IQT500FA10	AWC	See AWC Document 17805-IC-DAS-006
MV-439	Chlorine Contact Basin 3 Effluent Control Valve	8"-PVC80-PW-414	PI17	8"	Resilient Seated Butterfly	FL, 125/150, LUG	O/C	Electric Rotary Motor	LAST	Bray Series 31 or Equal	Bray Series 70 -020 or Equal	CONTRACTOR	See Specifications
MV-436	Chlorine Contact Basin Bypass Control Valve	14"-PVC80-PW-401	PI17	14"	Resilient Seated Butterfly	FL, 125/150, LUG	O/C	Electric Rotary Motor	LAST	Bray Series 31 or Equal	Bray Series 70-065 or Equal	CONTRACTOR	See Specifications
MV-435	Chlorine Contact Basin 1 Inlet Control Valve	14"-PVC80-PW-402	PI17	14"	Resilient Seated Butterfly	FL, 125/150, LUG	O/C	Electric Rotary Motor	LAST	Bray Series 31 or Equal	Bray Series 70-065 or Equal	CONTRACTOR	See Specifications
MV-438	Chlorine Contact Basin 2 Effluent Control Valve	8"-PVC80-PW-417	PI17	8"	Resilient Seated Butterfly	FL, 125/150, LUG	O/C	Electric Rotary Motor	LAST	Bray Series 31 or Equal	Bray Series 70 -020 or Equal	CONTRACTOR	See Specifications
MV-437	Chlorine Contact Basin 4 Inlet Control Valve	14"-PVC80-FW-403	PI17	14"	Resilient Seated Butterfly	FL, 125/150, LUG	O/C	Electric Rotary Motor	LAST	Bray Series 31 or Equal	Bray Series 70-065 or Equal	CONTRACTOR	See Specifications
FV-603A	Backwash EQ Basin Effluent Pinch Valve A	14"-DI150-WW-601	PI20	4"	Segmented Ball Valve	FL, 125/150, FF	Modulating	Electric Rotary Motor	LAST	Bray Series S19L Ball or Equal	Bray Series 70-006 or Equal	CONTRACTOR	See Specifications
FV-603B	Backwash EQ Basin Effluent Pinch Valve B	14"-DI150-WW-601	PI20	4"	Segmented Ball Valve	FL, 125/150, FF	Modulating	Electric Rotary Motor	LAST	Bray Series S19L Ball or Equal	Bray Series 70-006 or Equal	CONTRACTOR	See Specifications
MV-TK701	Hypocholorite Storage Tank 1 Effluent Control Valve	2"-PVC80-HS-718	PI28	1/2"	Ball Valve	SOCKET	O/C	Electric Rotary Motor	LAST	Hayward TBH True Union Valve or Equal	Hayward Series EAU1 or Equal	CONTRACTOR	See Specifications
MV-TK702	Hypocholorite Storage Tank 2 Effluent Control Valve	2"-PVC80-HS-727	PI30	1/2"	Ball Valve	SOCKET	O/C	Electric Rotary Motor	LAST	Hayward TBH True Union Valve or Equal	Hayward Series EAU1 or Equal	CONTRACTOR	See Specifications
Manual Control Valves													
FV-703	Dilution Panel Bulk Hypo Control Valve	1"-PVC80-HSB-717	PI28	1"	Proportional Ball Valve	SOCKET	Throttling	Manual	N/A	OSHG VENDOR PACKAGE	N/A	CONTRACTOR	See OSHG Shop Drawings
FV-704	Dilution Panel Water Inlet Control Valve	1"-PVC80-SW-716	PI28	1"	Proportional Ball Valve	SOCKET	Throttling	Manual	N/A	OSHG VENDOR PACKAGE	N/A	CONTRACTOR	See OSHG Shop Drawings
Solenoid Control Valves													
02-UV-114	DAF 1 Potable Water Control	3/4"-PVC80-PW-322	PI04	3/4"	Globe	FNPT, 400#	O/C	Solenoid	TBD	Hytrol 100-01, Cla-Val 136-01	CS3 Solenoid	AWC	SEE AWC Document 17805-IC-DAS-012
02-XV-132	Saturator 1 Compressed Air Flow Control	1/2"-SS304-CA-801 (02-SAT-125)	PI05	1/2"	Solenoid	FNPT, 150#	O/C	Solenoid	CLOSED	ASCO	ASCO	AWC	SEE AWC Document 17805-IC-DAS-030
02-UV-214	DAF 2 Potable Water Control	3/4"-PVC80-PW-321	PI06	3/4"	Globe	FNPT, 400#	O/C	Solenoid	TBD	Hytrol 100-01, Cla-Val 136-01	CS3 Solenoid	AWC	SEE AWC Document 17805-IC-DAS-012
02-XV-232	Saturator 2 Compressed Air Flow Control	1/2"-SS304-CA-802 (02-SAT-225)	PI07	1/2"	Solenoid Valve	FNPT, 150#	O/C	Solenoid	CLOSED	ASCO	ASCO	AWC	SEE AWC Document 17805-IC-DAS-030
02-UV-314	DAF 3 Potable Water Control	3/4"-PVC80-PW-320	PI08	3/4"	Globe	FNPT, 400#	O/C	Solenoid	TBD	Hytrol 100-01, Cla-Val 136-01	CS3 Solenoid	AWC	SEE AWC Document 17805-IC-DAS-012
02-XV-332	Saturator 3 Compressed Air Flow Control	1/2"-SS304-CA-803 (02-SAT-325)	PI09	1/2"	Solenoid Valve	FNPT, 150#	O/C	Solenoid	CLOSED	ASCO	ASCO	AWC	SEE AWC Document 17805-IC-DAS-030
03-AV-145	Filter 1 Turbidity Analyzer Control	03-TK-140	PI10	1/2"	Solenoid Valve	FNPT, 150#	O/C	Solenoid	CLOSED	ASCO	ASCO	AWC	SEE AWC Document 17805-IC-DAS-013
03-AV-165	Filter 2 Turbidity Analyzer Control	03-TK-160	PI11	1/2"	Solenoid Valve	FNPT, 150#	O/C	Solenoid	CLOSED	ASCO	ASCO	AWC	SEE AWC Document 17805-IC-DAS-013
03-AV-185	Filter 3 Turbidity Analyzer Control	03-TK-180	PI12	1/2"	Solenoid Valve	FNPT, 150#	O/C	Solenoid	CLOSED	ASCO	ASCO	AWC	SEE AWC Document 17805-IC-DAS-013
03-AV-245	Filter 4 Turbidity Analyzer Control	03-TK-240	PI13	1/2"	Solenoid Valve	FNPT, 150#	O/C	Solenoid	CLOSED	ASCO	ASCO	AWC	SEE AWC Document 17805-IC-DAS-013
03-AV-265	Filter 5 Turbidity Analyzer Control	03-TK-260	PI14	1/2"	Solenoid Valve	FNPT, 150#	O/C	Solenoid	CLOSED	ASCO	ASCO	AWC	SEE AWC Document 17805-IC-DAS-013
03-AV-285	Filter 6 Turbidity Analyzer Control	03-TK-280	PI15	1/2"	Solenoid Valve	FNPT, 150#	O/C	Solenoid	CLOSED	ASCO	ASCO	AWC	SEE AWC Document 17805-IC-DAS-013
08-XV-819	Compressor Tank Drain Valve	08-REC-815	PI21	1/4"	Solenoid Valve	FNPT	O/C	Solenoid	LAST	Supplied by Air Compressor Vendor	TBD	AWC	
SV-701	OSHG 1 Brine Fill Solenoid Valve	EC-701 (SKID)	PI27	1/4"	Solenoid Valve	TBD	O/C	Solenoid	TBD	OSHG VENDOR PACKAGE	VENDOR PACKAGE	CONTRACTOR	See OSHG Shop Drawings

DOWL Stanley Consultants INC.	**CONTROL VALVE LIST**	DOWL Project No.:	50206.01	Revision:	A
		Stanley Project No:		Date:	4/10/2023
		Client:	CBW	By:	GP
		Location:	Wrangell, AK	Checked:	

Valve Number	Name	Line / Equip. Number	On Project P&ID	Size (in)	Body Type	End Type	Control Function	Actuation	Fail Position	Valve Man/Model	Actuator Man/Model	Supplied By	Comments
SV-702	OSHG 1 Softened Water Solenoid Valve	EC-701 (SKID)	PI27	1/2"	Solenoid Valve	TBD	O/C	Solenoid	TBD	OSHG VENDOR PACKAGE	VENDOR PACKAGE	CONTRACTOR	See OSHG Shop Drawings
SV-703	OSHG 1 Three Way Solenoid Valve	EC-701 (SKID)	PI27	1/2"	Three Way Valve	TBD	O/C	Solenoid	TBD	OSHG VENDOR PACKAGE	VENDOR PACKAGE	CONTRACTOR	See OSHG Shop Drawings
SV-704	OSHG 1 Brine Solenoid Valve	EC-701 (SKID)	PI27	1/2"	Solenoid valve	TBD	O/C	Solenoid	TBD	OSHG VENDOR PACKAGE	VENDOR PACKAGE	CONTRACTOR	See OSHG Shop Drawings
SV-706	OSHG 2 Brine Fill Solenoid Valve	EC-702 (SKID)	PI29	1/4"	Solenoid Valve	TBD	O/C	Solenoid	TBD	OSHG VENDOR PACKAGE	VENDOR PACKAGE	CONTRACTOR	See OSHG Shop Drawings
SV-707	OSHG 2 Softened Water Solenoid Valve	EC-702 (SKID)	PI29	1/2"	Solenoid Valve	TBD	O/C	Solenoid	TBD	OSHG VENDOR PACKAGE	VENDOR PACKAGE	CONTRACTOR	See OSHG Shop Drawings
SV-708	OSHG 2 Three Way Solenoid Valve	EC-702 (SKID)	PI29	1/2"	Three Way Valve	TBD	O/C	Solenoid	TBD	OSHG VENDOR PACKAGE	VENDOR PACKAGE	CONTRACTOR	See OSHG Shop Drawings
SV-709	OSHG 2 Brine Solenoid Valve	EC-702 (SKID)	PI29	1/2"	Solenoid valve	TBD	O/C	Solenoid	TBD	OSHG VENDOR PACKAGE	VENDOR PACKAGE	CONTRACTOR	See OSHG Shop Drawings

DOWL Stanley Consultants INC.	**RELIEF VALVE LIST**	DOWL Project No.:	50206.01	Revision:	A
		Stanley Project No:		Date:	4/10/2023
		Client:	CBW	By:	GP
		Location:	Wrangell, AK	Checked:	

Valve Number	Name	Line / Equip. Number	On P&ID	Size (in)	Type	End Type	Set Point	Sizing Case	Sized By	Man/Model	Supplied By	Comments
RELIEF VALVES												
ARV-443	CHLORINE CONTACT BASIN INFLUENT AIR RELEASE VALVE	14"-PVC80-FW-401	PI17	2"	AIR RELEASE	FNPT	N/A	N/A	ENGINEER	Hayward AR Series or Equal	CONTRACTOR	See Specifications
VSV-603	BACKWASH EQ BASIN EFFLUENT PIPELINE VACUUM BREAKER VALVE	6"-DI150-WW-601	PI20	2"	COMBINATION AIR	FNPT	N/A	N/A	ENGINEER	APCO Single Body ASC or Equal	CONTRACTOR	See Specifications
PSV-502A	COAGUALANT FEED PRESSURE RELIEF VALVE A	P-502A/B (SKID)	PI24	1/2"	DIRECT ACTING, IN-LINE	SOCKET	90 PSIG	BLOCKED DISCHARGE	PUMP SUPPLIER	Blue-White, Hayward, or Equal	CONTRACTOR	On Peristaltic Pump Skid, See Specifications
PSV-502B	COAGUALANT FEED PRESSURE RELIEF VALVE B	P-502A/B (SKID)	PI24	1/2"	DIRECT ACTING, IN-LINE	SOCKET	90 PSIG	BLOCKED DISCHARGE	PUMP SUPPLIER	Blue-White, Hayward, or Equal	CONTRACTOR	On Peristaltic Pump Skid, See Specifications
PSV-503A	ORTHOPHOSPHATE FEED PRESSURE RELIEF VALVE A	P-503A/B (SKID)	PI25	1/2"	DIRECT ACTING, IN-LINE	SOCKET	90 PSIG	BLOCKED DISCHARGE	PUMP SUPPLIER	Blue-White, Hayward, or Equal	CONTRACTOR	On Peristaltic Pump Skid, See Specifications
PSV-503B	ORTHOPHOSPHATE FEED PRESSURE RELIEF VALVE B	P-503A/B (SKID)	PI25	1/2"	DIRECT ACTING, IN-LINE	SOCKET	90 PSIG	BLOCKED DISCHARGE	PUMP SUPPLIER	Blue-White, Hayward, or Equal	CONTRACTOR	On Peristaltic Pump Skid, See Specifications
PSV-756	HYPOCHLORITE FEED PRESSURE RELIEF VALVE 1	P-703A/B/C (SKID)	PI31	1/2"	DIRECT ACTING, IN-LINE	SOCKET	90 PSIG	BLOCKED DISCHARGE	PUMP SUPPLIER	Blue-White, Hayward, or Equal	CONTRACTOR	On Peristaltic Pump Skid, See Specifications
PSV-757	HYPOCHLORITE FEED PRESSURE RELIEF VALVE 2	P-703A/B/C (SKID)	PI31	1/2"	DIRECT ACTING, IN-LINE	SOCKET	90 PSIG	BLOCKED DISCHARGE	PUMP SUPPLIER	Blue-White, Hayward, or Equal	CONTRACTOR	On Peristaltic Pump Skid, See Specifications
PSV-501A	CAUSTIC FEED PRESSURE RLIEF VALVE A	P-501A/B (SKID)	PI23	1/2"	DIRECT ACTING, IN-LINE	SOCKET	90 PSIG	BLOCKED DISCHARGE	PUMP SUPPLIER	Blue-White, Hayward, or Equal	CONTRACTOR	On Peristaltic Pump Skid, See Specifications
PSV-501B	CAUSTIC FEED PRESSURE RLIEF VALVE B	P-501A/B (SKID)	PI23	1/2"	DIRECT ACTING, IN-LINE	SOCKET	90 PSIG	BLOCKED DISCHARGE	PUMP SUPPLIER	Blue-White, Hayward, or Equal	CONTRACTOR	On Peristaltic Pump Skid, See Specifications
PSV-610	AIR SCOUR BLOWER DISCHARGE PRESSURE SAFETY VALVE	8"-SS304-CA-601	PI22	2" x 2"	CONVENTIONAL	MNPT X FNPT	10 PSIG	BLOCKED DISCHARGE	ENGINEER	Emerson Kunkle 0377-H03ANE0010	CONTRACTOR	See Specifications Section 40 05 23
02-PSV-127	SATURATOR 1 PRESSURE SAFETY VALVE	02-SAT-125	PI05	1/2" X 3/4" , Size D Orifice	CONVENTIONAL	MNPT X FNPT	150 PSIG	CODE CASE	AWC	Emerson 6010DCM01-KM0120	AWC	See AWC Document No. 17805-IC-DAS-010
02-PSV-227	SATURATOR 2 PRESSURE SAFETY VALVE	02-SAT-225	PI07	1/2" X 3/4" , Size D Orifice	CONVENTIONAL	MNPT X FNPT	150 PSIG	CODE CASE	AWC	Emerson 6010DCM01-KM0120	AWC	See AWC Document No. 17805-IC-DAS-010
02-PSV-327	SATURATOR 3 PRESSURE SAFETY VALVE	02-SAT-325	PI09	1/2" X 3/4" , Size D Orifice	CONVENTIONAL	MNPT X FNPT	150 PSIG	CODE CASE	AWC	Emerson 6010DCM01-KM0120	AWC	See AWC Document No. 17805-IC-DAS-010
03-PSV-195	BACKWASH SUPPLY PRESSURE SAFETY VALVE	12"-PVC80-PW-303	PI-12	6"x 6"	PILOT OPERTED ANGLE VALVE	FL, 150 X FL, 150	7.5 PSIG	CONTROL VALVE FAILURE	AWC	CLA-VAL 50-01 (100-01 W/ CRL-60 Pilot)	AWC	See AWC Document No. 17805-IC-DAS-011
08-PSV-815	AIR RECEIVER PRESSURE SAFETY VALVE	08-REC-815	PI21	TBD	TBD	TBD	190 PSIG	BLOCKED DISCHARGE	AWC	SUPPLIED BY AIR COMPRESSOR VENDOR	AWC	Se Specifications

MANUAL VALVE LIST - BUTTERFLY

DOWL Project No:	50206.01	Revision:	A
Stanley Project No:		Date:	4/10/2023
Client:	CBW	By:	GP
Location:	Wrangell, AK	Checked:	

Valve Number	Name	Line / Equip. Number	On P&ID	Size (in)	Type	End Type	Status	Actuation	Man/Model	Supplied By	Comments
BUTTERFLY VALVES											
HV-101	Raw Water Inlet Isolation Valve	8"-DI150-RW-101	PI03	8"	AWWA Butterfly	FL, 125/150	NO	Lever	Dezurik BAW	CONTRACTOR	See Specifications
02-HV-1101	DAF 1 Saturator Oulet Isolataion Valve 1	02-TK-119	PI04	2 1/2"	Resilient Seated Butterfly	FL, 125/150, LUG	NO	Handwheel	Dezurik BOS	AWC	See AWC Document 17805-PI-LST-002 Manual Valve List
02-HV-1102	DAF 1 Saturator Oulet Isolataion Valve 2	02-TK-119	PI04	3"	AWWA Butterfly	FL, 125/150	NO	Handwheel	Dezurik BAW	AWC	See AWC Document 17805-PI-LST-002 Manual Valve List
02-HV-1190	DAF 1 Saturator Inlet Isolation Valve	02-TK-119	PI04	4"	AWWA Butterfly	FL, 125/150	NO	Handwheel	Dezurik BAW	AWC	See AWC Document 17805-PI-LST-002 Manual Valve List
02-HV-1192	DAF 1 Clarified Water Discharge Isolation Valve	02-TK-119	PI04	10"	AWWA Butterfly	FL, 125/150	NO	Handwheel	Dezurik BAW	AWC	See AWC Document 17805-PI-LST-002 Manual Valve List
02-HV-1251	Saturator 1 Clarified Water Inlet Valve	02-SAT-125	PI05	3"	AWWA Butterfly	FL, 125/150	NO	Handwheel	Dezurik BAW	AWC	See AWC Document 17805-PI-LST-002 Manual Valve List
02-HV-2101	DAF 2 Saturator Oulet Isolataion Valve 1	02-TK-219	PI06	2 1/2"	Resilient Seated Butterfly	FL, 150, LUG	NO	Handwheel	Dezurik BOS	AWC	See AWC Document 17805-PI-LST-002 Manual Valve List
02-HV-2102	DAF 2 Saturator Oulet Isolataion Valve 2	02-TK-219	PI06	3"	AWWA Butterfly	FL, 125/150	NO	Handwheel	Dezurik BAW	AWC	See AWC Document 17805-PI-LST-002 Manual Valve List
02-HV-2190	DAF 2 Saturator Inlet Isolation Valve	02-TK-219	PI06	4"	AWWA Butterfly	FL, 125/150	NO	Handwheel	Dezurik BAW	AWC	See AWC Document 17805-PI-LST-002 Manual Valve List
02-HV-2192	DAF 2 Clarified Water Discharge Isolation Valve	02-TK-219	PI06	10"	AWWA Butterfly	FL, 125/150	NO	Handwheel	Dezurik BAW	AWC	See AWC Document 17805-PI-LST-002 Manual Valve List
02-HV-2251	Saturator 2 Clarified Water Inlet Valve	02-SAT-225	PI07	3"	AWWA Butterfly	FL, 125/150	NO	Handwheel	Dezurik BAW	AWC	See AWC Document 17805-PI-LST-002 Manual Valve List
02-HV-3101	DAF 3 Saturator Oulet Isolataion Valve 1	02-TK-319	PI08	2 1/2"	Resilient Seated Butterfly	FL, 150, LUG	NO	Handwheel	Dezurik BOS	AWC	See AWC Document 17805-PI-LST-002 Manual Valve List
02-HV-3102	DAF 3 Saturator Oulet Isolataion Valve 2	02-TK-319	PI08	3"	AWWA Butterfly	FL, 125/150	NO	Handwheel	Dezurik BAW	AWC	See AWC Document 17805-PI-LST-002 Manual Valve List
02-HV-3190	DAF 3 Saturator Inlet Isolation Valve	02-TK-319	PI08	4"	AWWA Butterfly	FL, 125/150	NO	Handwheel	Dezurik BAW	AWC	See AWC Document 17805-PI-LST-002 Manual Valve List
02-HV-3192	DAF 3 Clarified Water Discharge Isolation Valve	02-TK-319	PI08	10"	AWWA Butterfly	FL, 125/150	NO	Handwheel	Dezurik BAW	AWC	See AWC Document 17805-PI-LST-002 Manual Valve List
02-HV-3251	Saturator 2 Clarified Water Inlet Valve	02-SAT-325	PI09	3"	AWWA Butterfly	FL, 125/150	NO	Handwheel	Dezurik BAW	AWC	See AWC Document 17805-PI-LST-002 Manual Valve List
03-HV-1402	Filter 1 Outlet Isolation Valve	03-TK-140	PI10	12"	AWWA Butterfly	FL, 125/150	NO	Handwheel	Dezurik BAW	AWC	See AWC Document 17805-PI-LST-002 Manual Valve List
03-HV-1602	Filter 2 Outlet Isolation Valve	03-TK-160	PI11	12"	AWWA Butterfly	FL, 125/150	NO	Handwheel	Dezurik BAW	AWC	See AWC Document 17805-PI-LST-002 Manual Valve List
03-HV-1802	Filter 3 Outlet Isolation Valve	03-TK-180	PI12	12"	AWWA Butterfly	FL, 125/150	NO	Handwheel	Dezurik BAW	AWC	See AWC Document 17805-PI-LST-002 Manual Valve List
HV-308	Potable Water Backwash Supply Isolation Valve	8"-PVC80-PW-303	PI12	8"	AWWA Butterfly	FL, 125/150	NO	Handwheel	Dezurik BAW	CONTRACTOR	See Specifications
03-HV-2402	Filter 4 Outlet Isolation Valve	03-TK-240	PI13	12"	AWWA Butterfly	FL, 125/150	NO	Handwheel	Dezurik BAW	AWC	See AWC Document 17805-PI-LST-002 Manual Valve List
03-HV-2602	Filter 5 Outlet Isolation Valve	03-TK-260	PI14	12"	AWWA Butterfly	FL, 125/150	NO	Handwheel	Dezurik BAW	AWC	See AWC Document 17805-PI-LST-002 Manual Valve List
03-HV-2802	Filter 6 Outlet Isolation Valve	03-TK-280	PI15	12"	AWWA Butterfly	FL, 125/150	NO	Handwheel	Dezurik BAW	AWC	See AWC Document 17805-PI-LST-002 Manual Valve List
HV-409	High Service Pump A Suction Isolation Valve	P-401A/B/C SKID	PI18	8"	Resilient Seated Butterfly	FL, 125/150, LUG	NO	Lever	Dezurik BOS, Bray Series 31, OR Equal	CONTRACTOR	On High Service Pump Skid, See Specifications
HV-410	High Service Pump B Suction Isolation Valve	P-401A/B/C SKID	PI18	8"	Resilient Seated Butterfly	FL, 125/150, LUG	NO	Lever	Dezurik BOS, Bray Series 31, OR Equal	CONTRACTOR	On High Service Pump Skid, See Specifications
HV-411	High Service Pump C Suction Isolation Valve	P-401A/B/C SKID	PI18	8"	Resilient Seated Butterfly	FL, 125/150, LUG	NO	Lever	Dezurik BOS, Bray Series 31, OR Equal	CONTRACTOR	On High Service Pump Skid, See Specifications
HV-415	High Service Pump A Dischrage Isolation Valve	P-401A/B/C SKID	PI18	8"	Resilient Seated Butterfly	FL, 125/150, LUG	NO	Lever	Dezurik BOS, Bray Series 31, OR Equal	CONTRACTOR	On High Service Pump Skid, See Specifications
HV-416	High Service Pump B Dischrage Isolation Valve	P-401A/B/C SKID	PI18	8"	Resilient Seated Butterfly	FL, 125/150, LUG	NO	Lever	Dezurik BOS, Bray Series 31, OR Equal	CONTRACTOR	On High Service Pump Skid, See Specifications
HV-417	High Service Pump B Dischrage Isolation Valve	P-401A/B/C SKID	PI18	8"	Resilient Seated Butterfly	FL, 125/150, LUG	NO	Lever	Dezurik BOS, Bray Series 31, OR Equal	CONTRACTOR	On High Service Pump Skid, See Specifications

DOWL Stanley Consultants INC.	**MANUAL VALVE LIST - BUTTERFLY**	DOWL Project No:	50206.01	Revision:	A
		Stanley Project No:		Date:	4/10/2023
		Client:	CBW	By:	GP
		Location:	Wrangell, AK	Checked:	

Valve Number	Name	Line / Equip. Number	On P&ID	Size (in)	Type	End Type	Status	Actuation	Man/Model	Supplied By	Comments
HV-601	Air Scour Blower A Suction Isolation Valve	8"-SS303-BA-604	PI22	8"	Butterfly	GRV	NO	Lever	Victaulic VIC-300 Masterseal Series 461 or Equal	CONTRACTOR	See Specifications
HV-602	Air Scour Blower B Suction Isolation Valve	8"-SS303-BA-604	PI22	8"	Butterfly	GRV	NO	Lever	Victaulic VIC-300 Masterseal Series 461 or Equal	CONTRACTOR	See Specifications
HV-604	Air Scour Blower A Discharge Isolation Valve	8"-SS303-CA-601	PI22	8"	Butterfly	GRV	NO	Lever	Victaulic VIC-300 Masterseal Series 461 or Equal	CONTRACTOR	See Specifications
HV-606	Air Scour Blower B Discharge Isolation Valve	8"-SS303-CA-601	PI22	8"	Butterfly	GRV	NO	Lever	Victaulic VIC-300 Masterseal Series 461 or Equal	CONTRACTOR	See Specifications

DOWL Stanley Consultants INC.	**MANUAL VALVE LIST - BALL**	DOWL Project No.:	50206.01	Revision:	A
		Stanley Project No:		Date:	4/10/2023
		Client:	CBW	By:	GP
		Location:	Wrangell, AK	Checked:	

Valve Number	Name	Line / Equip. Number	On P&ID	Size (in)	Type	End Type	Status	Actuation	Man/Model	Supplied By	Comments
BALL VALVES											
HV-106	Raw Water Instrument Isolation Valve	8"-DI150-RW-101	PI03	1/2"	FULL PORT	FNPT, 1000#	NO	Lever	Apollo 76F or Equal	CONTRACTOR	See Specifications
HV-112	Raw Water Sample 01/01 Isolation Valve	8"-DI150-RW-101	PI03	1/2"	FULL PORT	FNPT, 1000#	NC	Lever	Apollo 76F or Equal	CONTRACTOR	See Specifications
HV-111	Raw Water Pressure Indicator Isolation Valve	14"-DI1500-RW-101	PI03	1/2"	FULL PORT	FNPT, 1000#	NO	Lever	Apollo 76F or Equal	CONTRACTOR	See Specifications
HV-111B	Raw Water Pressure Indicator Flush Valve	14"-DI1500-RW-101	-	1/2"	FULL PORT	FNPT, 1000#	NC	Lever	Apollo 76F or Equal	CONTRACTOR	Not on P&ID - See Process Mechanical Details
01-HV-0101	Rapid Mix Tank Drain 1	01-TK-020	PI03	2"	FULL PORT	FNPT, 1000#	NC	Lever	MA Stewart G2E 15-25146	AWC	See AWC Document 17805-PI-LST-002 Manual Valve List
01-HV-0102	Rapid Mix Tank Drain 2	01-TK-020	PI03	2"	FULL PORT	FNPT, 1000#	NC	Lever	MA Stewart G2E 15-25146	AWC	See AWC Document 17805-PI-LST-002 Manual Valve List
01-HV-0103	Rapid Mix Tank Drain 3	01-TK-020	PI03	2"	FULL PORT	FNPT, 1000#	NC	Lever	MA Stewart G2E 15-25146	AWC	See AWC Document 17805-PI-LST-002 Manual Valve List
02-HV-1104	DAF 1 Potable Water Supply Isolation Valve	3/4"-PVC80-PW-322	PI04	3/4"	FULL PORT	FNPT, 1000#	NC	Lever	MA Stewart G2E 15-25062	AWC	See AWC Document 17805-PI-LST-002 Manual Valve List
HV-1193	DAF 1 Discharge Sample 02/01 Isolation Valve	10"-PVC8-CW-201	PI04	1/2"	FULL PORT	FNPT, 1000#	NC	Lever	Apollo 76F or Equal	CONTRACTOR	See Specifications
02-HV-1020	DAF 1 - Stage 1 Floc Tank Drain Valve	02-TK-102	PI04	2"	FULL PORT	FNPT, 1000#	NC	Lever	MA Stewart G2E 15-25146	AWC	See AWC Document 17805-PI-LST-002 Manual Valve List
02-HV-1021	DAF 1 - Stage 2 Floc Tank Drain Valve	02-TK-104	PI04	2"	FULL PORT	FNPT, 1000#	NC	Lever	MA Stewart G2E 15-25146	AWC	See AWC Document 17805-PI-LST-002 Manual Valve List
02-HV-1041	DAF 1 - Clarifier Tank Drain Valve 1	02-TK-110	PI04	2"	FULL PORT	FNPT, 1000#	NC	Lever	MA Stewart G2E 15-25146	AWC	See AWC Document 17805-PI-LST-002 Manual Valve List
02-HV-1103	DAF 1 - Clarifier Tank Drain Valve 2	02-TK-110	PI04	2"	FULL PORT	FNPT, 1000#	NC	Lever	MA Stewart G2E 15-25146	AWC	See AWC Document 17805-PI-LST-002 Manual Valve List
02-HV-1191	DAF 1 - Break Tank Drain Valve	02-TK-119	PI04	2"	FULL PORT	FNPT, 1000#	NC	Lever	MA Stewart G2E 15-25146	AWC	See AWC Document 17805-PI-LST-002 Manual Valve List
02-HV-1258	Saturator 1 Level Indicator Isolation Valve 2	02-SAT-125	PI05	1"	FULL PORT	FNPT, 1000#	NO	Lever	MA Stewart G2E 15-25088	AWC	See AWC Document 17805-PI-LST-002 Manual Valve List
02-HV-1256	Saturator 1 Level Indicator Isolation Valve 1	02-SAT-125	PI05	1"	FULL PORT	FNPT, 1000#	NO	Lever	MA Stewart G2E 15-25088	AWC	See AWC Document 17805-PI-LST-002 Manual Valve List
02-HV-1252	Saturator 1 Level Transmitter Isolation Valve 1	02-SAT-125	PI05	1/2"	FULL PORT	FNPT, 1000#	NO	Lever	MA Stewart GSE 15-25047	AWC	See AWC Document 17805-PI-LST-002 Manual Valve List
02-HV-1253	Saturator 1 Level Transmitter Isolation Valve 2	02-SAT-125	PI05	1/2"	FULL PORT	FNPT, 1000#	NO	Lever	MA Stewart GSE 15-25047	AWC	See AWC Document 17805-PI-LST-002 Manual Valve List
02-HV-1259	Saturator 1 Pressure Indicator Isolation Valve	02-SAT-125	PI05	1/2"	FULL PORT	FNPT, 1000#	NC	Lever	MA Stewart GSE 15-25047	AWC	See AWC Document 17805-PI-LST-002 Manual Valve List
02-HV-1206	Saturator 1 Recycle Pump Suction Pressure Transmitter Isolation Valve	4"-SS304-CW-202A	PI05	1/2"	FULL PORT	FNPT, 1000#	NO	Lever	MA Stewart GSE 15-25047	AWC	See AWC Document 17805-PI-LST-002 Manual Valve List
02-HV-1202	Saturator 1 Recycle Pump Suction Pressure Indicator Isolation Valve	4"-SS304-CW-202A	PI05	1/2"	FULL PORT	FNPT, 1000#	NO	Lever	MA Stewart GSE 15-25047	AWC	See AWC Document 17805-PI-LST-002 Manual Valve List
02-HV-1207	Saturator 1 Inlet Pressure Transmitter Isolation Valve	3"-SS304-CW-202A	PI05	1/2"	FULL PORT	FNPT, 1000#	NO	Lever	MA Stewart GSE 15-25047	AWC	See AWC Document 17805-PI-LST-002 Manual Valve List
02-HV-1203	Saturator 1 Inlet Pressure Indicator Isolation Valve	3"-SS304-CW-202A	PI05	1/2"	FULL PORT	FNPT, 1000#	NO	Lever	MA Stewart GSE 15-25047	AWC	See AWC Document 17805-PI-LST-002 Manual Valve List
02-HV-1261	Saturator 1 Compressed Air Inlet Isolation Valve	1/2"-SS304-CA-801	PI05	1/2"	FULL PORT	FNPT, 1000#	NC	Lever	MA Stewart GSE 15-25047	AWC	See AWC Document 17805-PI-LST-002 Manual Valve List
02-HV-1257	Saturator 1 Level Indicator Drain Valve	02-SAT-125	PI05	1/2"	FULL PORT	FNPT, 1000#	NC	Lever	MA Stewart GSE 15-25047	AWC	See AWC Document 17805-PI-LST-002 Manual Valve List
02-HV-1262	Saturator 1 Drain Valve	4"-SS304-CW-205	PI05	2"	FULL PORT	FNPT, 1000#	NC	Lever	MA Stewart GSE 15-25146	AWC	See AWC Document 17805-PI-LST-002 Manual Valve List
02-HV-1255	Saturator 1 Level Transmitter Drain Valve 1	02-SAT-125	PI05	1/4"	FULL PORT	FNPT, 1000#	NC	Lever	MA Stewart G2E 15-25005	AWC	See AWC Document 17805-PI-LST-002 Manual Valve List
02-HV-1254	Saturator 1 Level Transmitter Drain Valve 2	02-SAT-125	PI05	1/4"	FULL PORT	FNPT, 1000#	NC	Lever	MA Stewart G2E 15-25005	AWC	See AWC Document 17805-PI-LST-002 Manual Valve List
02-HV-1205	Saturator 1 Air Purge Valve	3"-SS304-202A	PI05	1/2"	FULL PORT	FNPT, 1000#	NC	Lever	MA Stewart G2E 15-25047	AWC	See AWC Document 17805-PI-LST-002 Manual Valve List
02-HV-2104	DAF 2 Potable Water Supply Isolation Valve	3/4"-PVC80-PW-321	PI06	3/4"	FULL PORT	FNPT, 1000#	NC	Lever	MA Stewart G2E 15-25062	AWC	See AWC Document 17805-PI-LST-002 Manual Valve List
HV-2193	DAF 2 Discharge Sample 02/02 Isolation Valve	10"-PVC80-CW-208	PI06	1/2"	FULL PORT	FNPT, 1000#	NC	Lever	Apollo 76F or Equal	CONTRACTOR	See Specifications
02-HV-2020	DAF 2 Stage 1 Floc Tank Drain Valve	02-TK-202	PI06	2"	FULL PORT	FNPT, 1000#	NC	Lever	MA Stewart G2E 15-25146	AWC	See AWC Document 17805-PI-LST-002 Manual Valve List
02-HV-2021	DAF 2 Stage 2 Floc Tank Drain Valve	02-TK-204	PI06	2"	FULL PORT	FNPT, 1000#	NC	Lever	MA Stewart G2E 15-25146	AWC	See AWC Document 17805-PI-LST-002 Manual Valve List
02-HV-2041	DAF 2 Clarifier Tank Drain Valve 1	02-TK-210	PI06	2"	FULL PORT	FNPT, 1000#	NC	Lever	MA Stewart G2E 15-25146	AWC	See AWC Document 17805-PI-LST-002 Manual Valve List

DOWL Stanley Consultants INC.	**MANUAL VALVE LIST - BALL**	DOWL Project No.:	50206.01	Revision:	A
		Stanley Project No:		Date:	4/10/2023
		Client:	CBW	By:	GP
		Location:	Wrangell, AK	Checked:	

Valve Number	Name	Line / Equip. Number	On P&ID	Size (in)	Type	End Type	Status	Actuation	Man/Model	Supplied By	Comments
02-HV-2103	DAF 2 Clarifier Tank Drain Valve 2	02-TK-210	PI06	2"	FULL PORT	FNPT, 1000#	NC	Lever	MA Stewart G2E 15-25146	AWC	See AWC Document 17805-PI-LST-002 Manual Valve List
02-HV-2191	DAF 2 Break Tank Drain Valve	02-TK-219	PI06	2"	FULL PORT	FNPT, 1000#	NC	Lever	MA Stewart G2E 15-25146	AWC	See AWC Document 17805-PI-LST-002 Manual Valve List
02-HV-2203	Saturator 2 Inlet Pressure Indicator Isolation Valve	3"-SS304-CW-209	PI07	1/2"	FULL PORT	FNPT, 1000#	NO	Lever	MA Stewart GSE 15-25047	AWC	See AWC Document 17805-PI-LST-002 Manual Valve List
02-HV-2207	Saturator 2 Inlet Pressure Transmitter Isolation Valve	3"-SS304-CW-209	PI07	1/2"	FULL PORT	FNPT, 1000#	NO	Lever	MA Stewart GSE 15-25047	AWC	See AWC Document 17805-PI-LST-002 Manual Valve List
02-HV-2206	Saturator 2 Recycle Pump Suction Pressure Transmitter Isolation Valve	4"-SS304-CW-209	PI07	1/2"	FULL PORT	FNPT, 1000#	NO	Lever	MA Stewart GSE 15-25047	AWC	See AWC Document 17805-PI-LST-002 Manual Valve List
02-HV-2202	Saturator 2 Recycle Pump Suction Pressure Indicator Isolation Valve	4"-SS304-CW-209	PI07	1/2"	FULL PORT	FNPT, 1000#	NO	Lever	MA Stewart GSE 15-25047	AWC	See AWC Document 17805-PI-LST-002 Manual Valve List
02-HV-2259	Saturator 2 Pressure Indicator Isolation Valve	02-TK-225	PI07	1/2"	FULL PORT	FNPT, 1000#	NC	Lever	MA Stewart GSE 15-25047	AWC	See AWC Document 17805-PI-LST-002 Manual Valve List
02-HV-2252	Saturator 2 Level Transmitter Isolation Valve 1	02-TK-225	PI07	1/2"	FULL PORT	FNPT, 1000#	NO	Lever	MA Stewart GSE 15-25047	AWC	See AWC Document 17805-PI-LST-002 Manual Valve List
02-HV-2261	Saturator 2 Compressed Air Inlet Isolation Valve	1/2"-SS304-CA-802	PI07	1/2"	FULL PORT	FNPT, 1000#	NC	Lever	MA Stewart GSE 15-25047	AWC	See AWC Document 17805-PI-LST-002 Manual Valve List
02-HV-2253	Saturator 2 Level Transmitter Isolation Valve 2	02-TK-225	PI07	1/2"	FULL PORT	FNPT, 1000#	NO	Lever	MA Stewart GSE 15-25047	AWC	See AWC Document 17805-PI-LST-002 Manual Valve List
02HV-2258	Saturator 2 Level Indicator Isolation Valve 2	02-TK-225	PI07	1"	FULL PORT	FNPT, 1000#	NO	Lever	MA Stewart G2E 15-25088	AWC	See AWC Document 17805-PI-LST-002 Manual Valve List
02-HV-2256	Saturator 2 Level Indicator Isolation Valve 2	02-TK-225	PI07	1"	FULL PORT	FNPT, 1000#	NO	Lever	MA Stewart G2E 15-25088	AWC	See AWC Document 17805-PI-LST-002 Manual Valve List
02-HV-2257	Saturator 2 Level Indicator Drain Valve	02-TK-225	PI07	1/2"	FULL PORT	FNPT, 1000#	NC	Lever	MA Stewart GSE 15-25047	AWC	See AWC Document 17805-PI-LST-002 Manual Valve List
02-HV-2262	Saturator 2 Drain Valve	4"-SS304-CW-211	PI07	2"	FULL PORT	FNPT, 1000#	NC	Lever	MA Stewart GSE 15-25146	AWC	See AWC Document 17805-PI-LST-002 Manual Valve List
02-HV-2255	Saturator 2 Level Transmitter Drain Valve 2	02-TK-225	PI07	1/4"	FULL PORT	FNPT, 1000#	NC	Lever	MA Stewart G2E 15-25005	AWC	See AWC Document 17805-PI-LST-002 Manual Valve List
02-HV-2254	Saturator 2 Level Transmitter Drain Valve 1	02-TK-225	PI07	1/4"	FULL PORT	FNPT, 1000#	NC	Lever	MA Stewart G2E 15-25005	AWC	See AWC Document 17805-PI-LST-002 Manual Valve List
02-HV-2205	Saturator 2 Air Purge Valve	3"-SS304-CW-209	PI07	1/2"	FULL PORT	FNPT, 1000#	NC	Lever	MA Stewart G2E 15-25047	AWC	See AWC Document 17805-PI-LST-002 Manual Valve List
02-HV-3104	DAF 3 Potable Water Supply Isolation Valve	3/4"-PVC80-PW-320	PI08	3/4"	FULL PORT	FNPT, 1000#	NC	Lever	MA Stewart G2E 15-25062	AWC	See AWC Document 17805-PI-LST-002 Manual Valve List
HV-3193	DAF 3 Discharge Sample 02/03 Isolation Valve	10"-PVC80-CW-206	PI08	1/2"	FULL PORT	FNPT, 1000#	NO	Lever	Apollo 76F or Equal	CONTRACTOR	See Specifications
02-HV-3020	DAF 3 Stage 1 Floc Tank Drain Valve	02-TK-302	PI08	2"	FULL PORT	FNPT, 1000#	NC	Lever	MA Stewart G2E 15-25146	AWC	See AWC Document 17805-PI-LST-002 Manual Valve List
02-HV-3021	DAF 3 Stage 2 Floc Tank Drain Valve	02-TK-304	PI08	2"	FULL PORT	FNPT, 1000#	NC	Lever	MA Stewart G2E 15-25146	AWC	See AWC Document 17805-PI-LST-002 Manual Valve List
02-HV-3041	DAF 3 Clarifier Tank Drain Valve 1	02-TK-310	PI08	2"	FULL PORT	FNPT, 1000#	NC	Lever	MA Stewart G2E 15-25146	AWC	See AWC Document 17805-PI-LST-002 Manual Valve List
02-HV-3103	DAF 3 Clarifier Tank Drain Valve 2	02-TK-310	PI08	2"	FULL PORT	FNPT, 1000#	NC	Lever	MA Stewart G2E 15-25146	AWC	See AWC Document 17805-PI-LST-002 Manual Valve List
02-HV-3191	DAF 3 Break Tank Drain Valve	02-TK-319	PI08	2"	FULL PORT	FNPT, 1000#	NC	Lever	MA Stewart G2E 15-25146	AWC	See AWC Document 17805-PI-LST-002 Manual Valve List
02-HV-3253	Saturator 3 Level Transmitter Isolation Valve 2	02-SAT-325	PI09	1/2"	FULL PORT	FNPT, 1000#	NO	Lever	MA Stewart GSE 15-25047	AWC	See AWC Document 17805-PI-LST-002 Manual Valve List
02-HV-3258	Saturator 3 Level Indicator Isolation Valve 2	02-SAT-325	PI09	1"	FULL PORT	FNPT, 1000#	NO	Lever	MA Stewart G2E 15-25088	AWC	See AWC Document 17805-PI-LST-002 Manual Valve List
02-HV-3256	Saturator 3 Level Indicator Isolation Valve 1	02-SAT-325	PI09	1"	FULL PORT	FNPT, 1000#	NO	Lever	MA Stewart G2E 15-25088	AWC	See AWC Document 17805-PI-LST-002 Manual Valve List
02-HV-3261	Saturator 3 Compressed Air Inlet Isolation Valve	2"-SS304-CA-803	PI09	1/2"	FULL PORT	FNPT, 1000#	NC	Lever	MA Stewart GSE 15-25047	AWC	See AWC Document 17805-PI-LST-002 Manual Valve List
02-HV-3259	Saturator 3 Pressure Indicator Isolation Valve	02-SAT-325	PI09	1/2"	FULL PORT	FNPT, 1000#	NC	Lever	MA Stewart GSE 15-25047	AWC	See AWC Document 17805-PI-LST-002 Manual Valve List
02-HV-3252	Saturator 3 Level Transmitter Isolation Valve 1	02-SAT-325	PI09	1/2"	FULL PORT	FNPT, 1000#	NO	Lever	MA Stewart GSE 15-25047	AWC	See AWC Document 17805-PI-LST-002 Manual Valve List
02-HV-3203	Saturator 3 Inlet Pressure Indicator Isolation Valve	3"-SS304-CW-213	PI09	1/2"	FULL PORT	FNPT, 1000#	NO	Lever	MA Stewart GSE 15-25047	AWC	See AWC Document 17805-PI-LST-002 Manual Valve List
02-HV-3207	Saturator 3 Inlet Pressure Transmitter Isolation Valve	3"-SS304-CW-213	PI09	1/2"	FULL PORT	FNPT, 1000#	NO	Lever	MA Stewart GSE 15-25047	AWC	See AWC Document 17805-PI-LST-002 Manual Valve List
02-HV-3206	Saturator 3 Recycle Pump Suction Pressure Transmitter Isolation Valve	4"-SS304-CW-213	PI09	1/2"	FULL PORT	FNPT, 1000#	NO	Lever	MA Stewart GSE 15-25047	AWC	See AWC Document 17805-PI-LST-002 Manual Valve List
02-HV-3202	Saturator 3 Recycle Pump Suction Pressure Indicator Isolation Valve	4"-SS304-CW-213	PI09	1/2"	FULL PORT	FNPT, 1000#	NO	Lever	MA Stewart GSE 15-25047	AWC	See AWC Document 17805-PI-LST-002 Manual Valve List
02-HV-3205	Saturator 3 Air Purge Valve	3"-SS304-CW-213	PI09	1/2"	FULL PORT	FNPT, 1000#	NC	Lever	MA Stewart G2E 15-25047	AWC	See AWC Document 17805-PI-LST-002 Manual Valve List

DOWL Stanley Consultants INC.

MANUAL VALVE LIST - BALL

DOWL Project No.:	50206.01	Revision:	A
Stanley Project No:		Date:	4/10/2023
Client:	CBW	By:	GP
Location:	Wrangell, AK	Checked:	

Valve Number	Name	Line / Equip. Number	On P&ID	Size (in)	Type	End Type	Status	Actuation	Man/Model	Supplied By	Comments
02-HV-3254	Saturator 3 Level Transmitter Drain Valve 1	02-SAT-325	PI09	1/4"	FULL PORT	FNPT, 1000#	NC	Lever	MA Stewart G2E 15-25005	AWC	See AWC Document 17805-PI-LST-002 Manual Valve List
02-HV-3255	Saturator 3 Level Transmitter Drain Valve 2	02-SAT-325	PI09	1/4"	FULL PORT	FNPT, 1000#	NC	Lever	MA Stewart G2E 15-25005	AWC	See AWC Document 17805-PI-LST-002 Manual Valve List
02-HV-3262	Saturator 3 Drain Valve	4"-SS304-CW-215	PI09	2"	FULL PORT	FNPT, 1000#	NC	Lever	MA Stewart GSE 15-25146	AWC	See AWC Document 17805-PI-LST-002 Manual Valve List
02-HV-3257	Saturator 3 Level Indicator Drain Valve	02-SAT-325	PI09	1/2"	FULL PORT	FNPT, 1000#	NC	Lever	MA Stewart GSE 15-25047	AWC	See AWC Document 17805-PI-LST-002 Manual Valve List
HV-310	Filter 1 Sample Point 03/01 Isolation Valve	03-TK-140	PI10	1/2"	FULL PORT	FNPT, 1000#	NO	Lever	Apollo 76F or Equal	CONTRACTOR	See Specifications
03-HV-1401	Filter 1 Drain Valve	03-TK-140	PI10	2"	FULL PORT	FNPT, 1000#	NC	Lever	MA Stewart GSE 15-25146	AWC	See AWC Document 17805-PI-LST-002 Manual Valve List
03-HV-1403	Filter 1 Pressure Transmitter Isolation Valve	03-TK-140	PI10	1/2"	FULL PORT	FNPT, 1000#	NO	Lever	MA Stewart GSE 15-25047	AWC	See AWC Document 17805-PI-LST-002 Manual Valve List
03-HV-1404	Filter 1 Pressure Indicator Isolation Valve	03-TK-140	PI10	1/2"	FULL PORT	FNPT, 1000#	NO	Lever	MA Stewart GSE 15-25047	AWC	See AWC Document 17805-PI-LST-002 Manual Valve List
03-HV-1405	Filter 1 Turbidimeter Isolation valve	03-TK-140	PI10	1/2"	FULL PORT	FNPT, 1000#	NO	Lever	MA Stewart GSE 15-25047	AWC	See AWC Document 17805-PI-LST-002 Manual Valve List
HV-320	Filter 2 Sample Point 03/02 Isolation Valve	03-TK-160	PI11	1/2"	FULL PORT	FNPT, 1000#	NC	Lever	Apollo 76F or Equal	CONTRACTOR	See Specifications
03-HV-1601	Filter 2 Drain Valve	03-TK-160	PI11	2"	FULL PORT	FNPT, 1000#	NC	Lever	MA Stewart GSE 15-25146	AWC	See AWC Document 17805-PI-LST-002 Manual Valve List
03-HV-1603	Filter 2 Pressure Transmitter Isolation Valve	03-TK-160	PI11	1/2"	FULL PORT	FNPT, 1000#	NO	Lever	MA Stewart GSE 15-25047	AWC	See AWC Document 17805-PI-LST-002 Manual Valve List
03-HV-1604	Filter 2 Pressure Indicator Isolation Valve	03-TK-160	PI11	1/2"	FULL PORT	FNPT, 1000#	NO	Lever	MA Stewart GSE 15-25047	AWC	See AWC Document 17805-PI-LST-002 Manual Valve List
03-HV-1605	Filter 2 Turbidimeter Isolation valve	03-TK-160	PI11	1/2"	FULL PORT	FNPT, 1000#	NO	Lever	MA Stewart GSE 15-25047	AWC	See AWC Document 17805-PI-LST-002 Manual Valve List
HV-330	Filter 3 Sample Point 03/03 Isolation Valve	03-TK-180	PI12	1/2"	FULL PORT	FNPT, 1000#	NC	Lever	Apollo 76F or Equal	CONTRACTOR	See Specifications
03-HV-1801	Filter 3 Drain Valve	03-TK-180	PI12	2"	FULL PORT	FNPT, 1000#	NC	Lever	MA Stewart GSE 15-25146	AWC	See AWC Document 17805-PI-LST-002 Manual Valve List
03-HV-1803	Filter 3 Pressure Transmitter Isolation Valve	03-TK-180	PI12	1/2"	FULL PORT	FNPT, 1000#	NO	Lever	MA Stewart GSE 15-25047	AWC	See AWC Document 17805-PI-LST-002 Manual Valve List
03-HV-1804	Filter 3 Pressure Indicator Isolation Valve	03-TK-180	PI12	1/2"	FULL PORT	FNPT, 1000#	NO	Lever	MA Stewart GSE 15-25047	AWC	See AWC Document 17805-PI-LST-002 Manual Valve List
03-HV-1805	Filter 3 Turbidimeter Isolation valve	03-TK-180	PI12	1/2"	FULL PORT	FNPT, 1000#	NO	Lever	MA Stewart GSE 15-25047	AWC	See AWC Document 17805-PI-LST-002 Manual Valve List
HV-302	Backwash Supply Pressure Indicator 1 Isolation Valve	8"-PVC80-PW-303	PI12	1/2"	FULL PORT	FNPT, 1000#	NC	Lever	Apollo 76F or Equal	CONTRACTOR	See Specifications
HV-302B	Backwash Supply Pressure Indicator 1 Drain Valve	8"-PVC80-PW-303	-	1/2"	FULL PORT	FNPT, 1000#	NC	Lever	Apollo 76F or Equal	CONTRACTOR	See Specifications
HV-304	Backwash Supply Pressure Indicator 2 Isolation Valve	8"-PVC80-PW-303	PI12	1/2"	FULL PORT	FNPT, 1000#	NC	Lever	Apollo 76F or Equal	CONTRACTOR	See Specifications
HV-304B	Backwash Supply Pressure Indicator 2 Drain Valve	8"-PVC80-PW-303	-	1/2"	FULL PORT	FNPT, 1000#	NC	Lever	Apollo 76F or Equal	CONTRACTOR	See Specifications
HV-340	Filter 4 Sample Point 03/04 Isolation Valve	03-TK-240	PI13	1/2"	FULL PORT	FNPT, 1000#	NC	Lever	Apollo 76F or Equal	CONTRACTOR	See Specifications
03-HV-2401	Filter 4 Drain Valve	03-TK-240	PI13	2"	FULL PORT	FNPT, 1000#	NC	Lever	MA Stewart GSE 15-25146	AWC	See AWC Document 17805-PI-LST-002 Manual Valve List
03-HV-2403	Filter 4 Pressure Transmitter Isolation Valve	03-TK-240	PI13	1/2"	FULL PORT	FNPT, 1000#	NO	Lever	MA Stewart GSE 15-25047	AWC	See AWC Document 17805-PI-LST-002 Manual Valve List
03-HV-2404	Filter 4 Pressure Indicator Isolation Valve	03-TK-240	PI13	1/2"	FULL PORT	FNPT, 1000#	NO	Lever	MA Stewart GSE 15-25047	AWC	See AWC Document 17805-PI-LST-002 Manual Valve List
03-HV-2405	Filter 4 Turbidimeter Isolation valve	03-TK-240	PI13	1/2"	FULL PORT	FNPT, 1000#	NO	Lever	MA Stewart GSE 15-25047	AWC	See AWC Document 17805-PI-LST-002 Manual Valve List
HV-350	Filter 5 Sample Point 03/05 Isolation Valve	03-TK-260	PI14	1/2"	FULL PORT	FNPT, 1000#	NC	Lever	Apollo 76F or Equal	CONTRACTOR	See Specifications
03-HV-2601	Filter 5 Drain Valve	03-TK-260	PI14	2"	FULL PORT	FNPT, 1000#	NC	Lever	MA Stewart GSE 15-25146	AWC	See AWC Document 17805-PI-LST-002 Manual Valve List
03-HV-2603	Filter 5 Pressure Transmitter Isolation Valve	03-TK-260	PI14	1/2"	FULL PORT	FNPT, 1000#	NO	Lever	MA Stewart GSE 15-25047	AWC	See AWC Document 17805-PI-LST-002 Manual Valve List
03-HV-2604	Filter 5 Pressure Indicator Isolation Valve	03-TK-260	PI14	1/2"	FULL PORT	FNPT, 1000#	NO	Lever	MA Stewart GSE 15-25047	AWC	See AWC Document 17805-PI-LST-002 Manual Valve List
03-HV-2605	Filter 5 Turbidimeter Isolation valve	03-TK-260	PI14	1/2"	FULL PORT	FNPT, 1000#	NO	Lever	MA Stewart GSE 15-25047	AWC	See AWC Document 17805-PI-LST-002 Manual Valve List
HV-360	Filter 6 Sample Point 03/06 Isolation Valve	03-TK-260	PI15	1/2"	FULL PORT	FNPT, 1000#	NC	Lever	Apollo 76F or Equal	CONTRACTOR	See Specifications
03-HV-2801	Filter 6 Drain Valve	03-TK-260	PI15	2"	FULL PORT	FNPT, 1000#	NC	Lever	MA Stewart GSE 15-25146	AWC	See AWC Document 17805-PI-LST-002 Manual Valve List

DOWL Stanley Consultants INC.	**MANUAL VALVE LIST - BALL**	DOWL Project No.:	50206.01	Revision:	A
		Stanley Project No:		Date:	4/10/2023
		Client:	CBW	By:	GP
		Location:	Wrangell, AK	Checked:	

Valve Number	Name	Line / Equip. Number	On P&ID	Size (in)	Type	End Type	Status	Actuation	Man/Model	Supplied By	Comments
03-HV-2803	Filter 6 Pressure Transmitter Isolation Valve	03-TK-260	PI15	1/2"	FULL PORT	FNPT, 1000#	NO	Lever	MA Stewart GSE 15-25047	AWC	See AWC Document 17805-PI-LST-002 Manual Valve List
03-HV-2804	Filter 6 Pressure Indicator Isolation Valve	03-TK-260	PI15	1/2"	FULL PORT	FNPT, 1000#	NO	Lever	MA Stewart GSE 15-25047	AWC	See AWC Document 17805-PI-LST-002 Manual Valve List
03-HV-2805	Filter 6 Turbidimeter Isolation valve	03-TK-260	PI15	1/2"	FULL PORT	FNPT, 1000#	NO	Lever	MA Stewart GSE 15-25047	AWC	See AWC Document 17805-PI-LST-002 Manual Valve List
HV-362	Filtered Water Analyzer Tap Isolation Valve	14"-PVC80-FW-302	PI16	1/2"	FULL PORT	FNPT, 1000#	NC	Lever	Apollo 76F or Equal	CONTRACTOR	See Specifications
HV-363	Clarified Water Analyzer Tap Isolation Valve 1	10"-PVC80-CW-206	PI16	1/2"	FULL PORT	FNPT, 1000#	NC	Lever	Apollo 76F or Equal	CONTRACTOR	See Specifications
HV-364	Clarified Water Analyzer Tap Isolation Valve 2	10"-PVC80-CW-201	PI16	1/2"	FULL PORT	FNPT, 1000#	NC	Lever	Apollo 76F or Equal	CONTRACTOR	See Specifications
HV-370	Filtered Water Sample Tap 03/07 Isolation Valve	14"-PVC80-FW-302	PI16	1/2"	FULL PORT	FNPT, 1000#	NC	Lever	Apollo 76F or Equal	CONTRACTOR	See Specifications
HV-433	Chlorine/Temp/pH Analyzer Tap Isolation Valve	14"-PVC80-FW-302	PI17	1/2"	FULL PORT	FNPT, 1000#	NC	Lever	Apollo 76F or Equal	CONTRACTOR	See Specifications
HV-442	Chlorine Contact Basin Air Release Isolation Valve	14"-PVC80-FW-401	PI17	2"	FULL PORT	FIPT, 235 PSI	NO	Lever	Spears True Union 2000 or Equal	CONTRACTOR	See Specifications
HV-443	Post-Chemical Injection Filtered Water Sample Tap 04/01 Isolation Valve	14"-PVC80-FW-302	PI17	1/2"	FULL PORT	FNPT, 1000#	NC	Lever	Apollo 76F or Equal	CONTRACTOR	See Specifications
HV-444	High Service Pump A Discharge Pressure Indicator Isolation Valve	P-401A/B/C Skid	PI18	1/2"	FULL PORT	FNPT, 1000#	NO	Lever	Apollo 76F or Equal	CONTRACTOR	See Specifications
HV-444B	High Service Pump A Discharge Pressure Indicator Bleed Valve	P-401A/B/C Skid	PI18	1/2"	FULL PORT	FNPT, 1000#	NC	Lever	Apollo 76F or Equal	CONTRACTOR	See Specifications
HV-445	High Service Pump B Discharge Pressure Indicator Isolation Valve	P-401A/B/C Skid	PI18	1/2"	FULL PORT	FNPT, 1000#	NO	Lever	Apollo 76F or Equal	CONTRACTOR	See Specifications
HV-445B	High Service Pump B Discharge Pressure Indicator Bleed Valve	P-401A/B/C Skid	PI18	1/2"	FULL PORT	FNPT, 1000#	NC	Lever	Apollo 76F or Equal	CONTRACTOR	See Specifications
HV-446	High Service Pump C Discharge Pressure Indicator Isolation Valve	P-401A/B/C Skid	PI18	1/2"	FULL PORT	FNPT, 1000#	NO	Lever	Apollo 76F or Equal	CONTRACTOR	See Specifications
HV-446B	High Service Pump C Discharge Pressure Indicator Bleed Valve	P-401A/B/C Skid	PI18	1/2"	FULL PORT	FNPT, 1000#	NC	Lever	Apollo 76F or Equal	CONTRACTOR	See Specifications
HV-603A	Backwash EQ Basin Effluent Control Valve Isolation Valve A	4"-DI150-WW-601	PI20	4"	FULL PORT	FL, 125/150	NO	Lever	American Valve 4000D or Equal	CONTRACTOR	See Specifications
HV-603B	Backwash EQ Basin Effluent Control Valve Isolation Valve B	4"-DI150-WW-601	PI20	4"	FULL PORT	FL, 125/150	NO	Lever	American Valve 4000D or Equal	CONTRACTOR	See Specifications
HV-603C	Backwash EQ Basin Effluent Control Valve Isolation Valve C	4"-DI150-WW-601	PI20	4"	FULL PORT	FL, 125/150	NC	Lever	American Valve 4000D or Equal	CONTRACTOR	See Specifications
HV-603D	Backwash EQ Basin Effluent Control Valve Isolation Valve D	4"-DI150-WW-601	PI20	4"	FULL PORT	FL, 125/150	ND	Lever	American Valve 4000D or Equal	CONTRACTOR	See Specifications
08-HV-8153	Compressor Receiver Pressure Indicator Isolation Valve	08--REC-815	PI21	1/2"	BALL VALVE	TBD	NO	Lever	Supplied by Air Compressor Vendor	AWC	See AWC Document 17805-PI-LST-002 Manual Valve List
08-HV-8154	Compressor Reciever Drain Valve	08--REC-815	PI21	1/4"	BALL VALVE	TBD	NO	Lever	Supplied by Air Compressor Vendor	AWC	See AWC Document 17805-PI-LST-002 Manual Valve List
08-HV-8151	Compressor Receiver Outlet Isolation Valve	08--REC-815	PI21	1"	BALL VALVE	TBD	NO	Lever	Supplied by Air Compressor Vendor	AWC	See AWC Document 17805-PI-LST-002 Manual Valve List
HV-369	Compressor Header Isolation Valve	2"-SS304-CA-801	PI21	2"	BALL VALVE	TBD	NO	Lever		CONTRACTOR	
HV-870	Compressor Header PD Indicator 1 Drain Valve	3/4"-SS304-CA-801	PI21	1/4"	BALL VALVE	TBD	NO	Lever		CONTRACTOR	
HV-871	Compressor Header PD Indicator 2 Drain Valve	3/4"-SS304-CA-801	PI21	1/4"	BALL VALVE	TBD	NO	Lever		CONTRACTOR	
HV-872	Compressor Header PD Indicator 3 Drain Valve	3/4"-SS304-CA-801	PI21	1/4"	BALL VALVE	TBD	NO	Lever		CONTRACTOR	
08-HV-8152	Compressor Header Pressure Indicator Isolation valve	2"-SS304-CA-801	PI21	1/2"	FULL PORT	FNPT, 1000#	NO	Lever	MA Stewart GSE 15-25047	CONTRACTOR	See AWC Document 17805-PI-LST-002 Manual Valve List
08-HV-8152B	Compressor Header Pressure Indicator Bleed valve	2"-SS304-CA-801	-	1/2"	FULL PORT	FNPT, 1000#	NC	Lever	MA Stewart GSE 15-25047 or Equal	CONTRACTOR	Not on P&ID - See Process Mechanical Details
HV-600	Air Scour Header Drain Valve	8"-SS304-CA-601	PI22	1/2"	FULL PORT	FNPT, 1000#	NC	Lever	MA Stewart GSE 15-25047 or Equal	CONTRACTOR	See Specifications
HV-607A	Aiir Scour Blower Suction Pressure Transmitter Isolation Valve	8"-SS304-CA-600	PI22	1/2"	FULL PORT	FNPT, 1000#	NC	Lever	MA Stewart GSE 15-25047 or Equal	CONTRACTOR	See Specifications
HV-607B	Aiir Scour Blower Suction Pressure Switch Isolation Valve	8"-SS304-CA-600	PI22	1/2"	FULL PORT	FNPT, 1000#	NC	Lever	MA Stewart GSE 15-25047 or Equal	CONTRACTOR	See Specifications
HV-608A	Aiir Scour Blower A Dicharge Pressure Transmitter Isolation Valve	8"-SS304-CA-601	PI22	1/2"	FULL PORT	FNPT, 1000#	NC	Lever	MA Stewart GSE 15-25047 or Equal	CONTRACTOR	See Specifications
HV-608B	Aiir Scour Blower A Suction Pressure Switch Isolation Valve	8"-SS304-CA-601	PI22	1/2"	FULL PORT	FNPT, 1000#	NC	Lever	MA Stewart GSE 15-25047 or Equal	CONTRACTOR	See Specifications
HV-609A	Aiir Scour Blower B Suction Pressure Transmitter Isolation Valve	8"-SS304-CA-601	PI22	1/2"	FULL PORT	FNPT, 1000#	NC	Lever	MA Stewart GSE 15-25047 or Equal	CONTRACTOR	See Specifications
HV-609B	Aiir Scour Blower B Suction Pressure Switch Isolation Valve	8"-SS304-CA-601	PI22	1/2"	FULL PORT	FNPT, 1000#	NC	Lever	MA Stewart GSE 15-25047 or Equal	CONTRACTOR	See Specifications

DOWL Stanley Consultants INC.	**MANUAL VALVE LIST - BALL**	DOWL Project No.:	50206.01	Revision:	A
		Stanley Project No:		Date:	4/10/2023
		Client:	CBW	By:	GP
		Location:	Wrangell, AK	Checked:	

Valve Number	Name	Line / Equip. Number	On P&ID	Size (in)	Type	End Type	Status	Actuation	Man/Model	Supplied By	Comments
HV-516	Caustic Discharge Pressure Indicator/Switch A Isolation Valve	P-501A/B/C SKID	PI23	1/2"	FULL PORT	SOCKET	NO	Lever	Blue -White, Spears True Union 2000, or Equal	CONTRACTOR	On Peristaltic Pump Skid, See Specifications
HV-519	Caustic Discharge B Isolation Valve	P-501A/B/C SKID	PI23	1/2"	FULL PORT	SOCKET	NO	Lever	Blue -White, Spears True Union 2000, or Equal	CONTRACTOR	On Peristaltic Pump Skid, See Specifications
HV-518	Caustic Discharge A Isolation Valve	P-501A/B/C SKID	PI23	1/2"	FULL PORT	SOCKET	NO	Lever	Blue -White, Spears True Union 2000, or Equal	CONTRACTOR	On Peristaltic Pump Skid, See Specifications
HV-505	Caustic Suction Calibration Column Isolation Valve 1	P-501A/B/C SKID	PI23	1/2"	FULL PORT	SOCKET	NO	Lever	Blue -White, Spears True Union 2000, or Equal	CONTRACTOR	On Peristaltic Pump Skid, See Specifications
HV-508	Caustic Peristaltic Pump C Inlet Isolation Valve	P-501A/B/C SKID	PI23	1/2"	FULL PORT	SOCKET	NO	Lever	Blue -White, Spears True Union 2000, or Equal	CONTRACTOR	On Peristaltic Pump Skid, See Specifications
HV-507	Caustic Suction Calibration Column Isolation Valve 1	P-501A/B/C SKID	PI23	1/2"	FULL PORT	SOCKET	NO	Lever	Blue -White, Spears True Union 2000, or Equal	CONTRACTOR	On Peristaltic Pump Skid, See Specifications
HV-506	Caustic Suction Calibration Column Isolation Valve 1	P-501A/B/C SKID	PI23	1/2"	FULL PORT	SOCKET	NO	Lever	Blue -White, Spears True Union 2000, or Equal	CONTRACTOR	On Peristaltic Pump Skid, See Specifications
HV-512	Caustic Discharge Calibration Column Isolation Valve 1	P-501A/B/C SKID	PI23	1/2"	FULL PORT	SOCKET	NO	Lever	Blue -White, Spears True Union 2000, or Equal	CONTRACTOR	On Peristaltic Pump Skid, See Specifications
HV-513	Caustic Discharge Calibration Column Isolation Valve 2	P-501A/B/C SKID	PI23	1/2"	FULL PORT	SOCKET	NO	Lever	Blue -White, Spears True Union 2000, or Equal	CONTRACTOR	On Peristaltic Pump Skid, See Specifications
HV-502	Caustic Peristaltic Pump B Inlet Isolation Valve	P-501A/B/C SKID	PI23	1/2"	FULL PORT	SOCKET	NO	Lever	Blue -White, Spears True Union 2000, or Equal	CONTRACTOR	On Peristaltic Pump Skid, See Specifications
HV-503	Caustic Peristaltic Pump C Inlet Isolation Valve	P-501A/B/C SKID	PI23	1/2"	FULL PORT	SOCKET	NO	Lever	Blue -White, Spears True Union 2000, or Equal	CONTRACTOR	On Peristaltic Pump Skid, See Specifications
HV-501	Caustic Peristaltic Pump A Suction Isolation Valve 1	P-501A/B/C SKID	PI23	1/2"	FULL PORT	SOCKET	NO	Lever	Blue -White, Spears True Union 2000, or Equal	CONTRACTOR	On Peristaltic Pump Skid, See Specifications
HV-504	Caustic Peristaltic Pump A Suction Isolation Valve	P-501A/B/C SKID	PI23	1/2"	FULL PORT	SOCKET	NO	Lever	Blue -White, Spears True Union 2000, or Equal	CONTRACTOR	On Peristaltic Pump Skid, See Specifications
HV-517	Caustic Discharge Pressure Indicator/Switch B Isolation Valve	P-501A/B/C SKID	PI23	1/2"	FULL PORT	SOCKET	NO	Lever	Blue -White, Spears True Union 2000, or Equal	CONTRACTOR	On Peristaltic Pump Skid, See Specifications
HV-TK501	Caustic Chemical Tote Outlet Valve	TK-501	PI23	2"	STD PORT	CAM	NO	Lever	Integral to Chemical Tote	CONTRACTOR	See Specifications
HV-531	Coagualant Peristaltic Pump A Suction Isolation Valev	P-502A/B SKID	PI24	1/2"	FULL PORT	SOCKET	NO	Lever	Blue -White, Spears True Union 2000, or Equal	CONTRACTOR	On Peristaltic Pump Skid, See Specifications
HV-535	Coagualant Peristaltic Pump A Discharge Isolation Valev	P-502A/B SKID	PI24	1/2"	FULL PORT	SOCKET	NO	Lever	Blue -White, Spears True Union 2000, or Equal	CONTRACTOR	On Peristaltic Pump Skid, See Specifications
HV-538	Coagualant Peristaltic Pump B Discharge Isolation Valev	P-502A/B SKID	PI24	1/2"	FULL PORT	SOCKET	NO	Lever	Blue -White, Spears True Union 2000, or Equal	CONTRACTOR	On Peristaltic Pump Skid, See Specifications
HV-543	Coaguaant Calibration Column Outlet Isolation Valve	P-502A/B SKID	PI24	1/2"	FULL PORT	SOCKET	NO	Lever	Blue -White, Spears True Union 2000, or Equal	CONTRACTOR	On Peristaltic Pump Skid, See Specifications
HV-530	Coagualant Pump Skid Inlet Isolation Valve	P-502A/B SKID	PI24	1/2"	FULL PORT	SOCKET	NO	Lever	Blue -White, Spears True Union 2000, or Equal	CONTRACTOR	On Peristaltic Pump Skid, See Specifications
HV-540	Coagulant Dicharge Pressure Indicator Isolation Valve	P-502A/B SKID	PI24	1/2"	FULL PORT	SOCKET	NO	Lever	Blue -White, Spears True Union 2000, or Equal	CONTRACTOR	On Peristaltic Pump Skid, See Specifications
HV-532	Coagualant Peristaltic Pump B Suction Isolation Valev	P-502A/B SKID	PI24	1/2"	FULL PORT	SOCKET	NO	Lever	Blue -White, Spears True Union 2000, or Equal	CONTRACTOR	On Peristaltic Pump Skid, See Specifications
HV-541	Coagulant Dicharge Pressure Switch Isolation Valve	P-502A/B SKID	PI24	1/2"	FULL PORT	SOCKET	NO	Lever	Blue -White, Spears True Union 2000, or Equal	CONTRACTOR	On Peristaltic Pump Skid, See Specifications
HV-546	Coagualant Pump Skid Outlet Isolation Valve	P-502A/B SKID	PI24	1/2"	FULL PORT	SOCKET	NO	Lever	Blue -White, Spears True Union 2000, or Equal	CONTRACTOR	On Peristaltic Pump Skid, See Specifications
HV-544	Coagualant Calibration Column Inlet Isolation Valve	P-502A/B SKID	PI24	1/2"	FULL PORT	SOCKET	NO	Lever	Blue -White, Spears True Union 2000, or Equal	CONTRACTOR	On Peristaltic Pump Skid, See Specifications
HV-TK502	Coagulant Chemical Tote Outlet Valve	TK-502	PI24	2"	STD PORT	CAM	NO	Lever	Integral to Chemical Tote	CONTRACTOR	See Specifications
HV-561	Orthophosphate Pump Skid Inlet Isolation Valve	P-503A/B SKID	PI25	1/2"	FULL PORT	SOCKET	NO	Lever	Blue -White, Spears True Union 2000, or Equal	CONTRACTOR	On Peristaltic Pump Skid, See Specifications
HV-562	Orthophosphate Peristaltic Pump A Suction Isolation Valev	P-503A/B SKID	PI25	1/2"	FULL PORT	SOCKET	NO	Lever	Blue -White, Spears True Union 2000, or Equal	CONTRACTOR	On Peristaltic Pump Skid, See Specifications
HV-576	Orthophosphate Pump Skid Outlet Isolation Valve	P-503A/B SKID	PI25	1/2"	FULL PORT	SOCKET	NO	Lever	Blue -White, Spears True Union 2000, or Equal	CONTRACTOR	On Peristaltic Pump Skid, See Specifications
HV-571	Orthophosphate Dicharge Pressure Switch Isolation Valve	P-503A/B SKID	PI25	1/2"	FULL PORT	SOCKET	NO	Lever	Blue -White, Spears True Union 2000, or Equal	CONTRACTOR	On Peristaltic Pump Skid, See Specifications
HV-563	Orthophosphate Peristaltic Pump B Suction Isolation Valev	P-503A/B SKID	PI25	1/2"	FULL PORT	SOCKET	NO	Lever	Blue -White, Spears True Union 2000, or Equal	CONTRACTOR	On Peristaltic Pump Skid, See Specifications
HV-568	Orthophosphate Peristaltic Pump B Discharge Isolation Valev	P-503A/B SKID	PI25	1/2"	FULL PORT	SOCKET	NO	Lever	Blue -White, Spears True Union 2000, or Equal	CONTRACTOR	On Peristaltic Pump Skid, See Specifications
HV-573	Orthophosphate Calibration Column Outlet Isolation Valve	P-503A/B SKID	PI25	1/2"	FULL PORT	SOCKET	NO	Lever	Blue -White, Spears True Union 2000, or Equal	CONTRACTOR	On Peristaltic Pump Skid, See Specifications
HV-574	Orthophosphate Calibration Column Inlet Isolation Valve	P-503A/B SKID	PI25	1/2"	FULL PORT	SOCKET	NO	Lever	Blue -White, Spears True Union 2000, or Equal	CONTRACTOR	On Peristaltic Pump Skid, See Specifications
HV-570	Orthophosphate Dicharge Pressure Indicator Isolation Valve	P-503A/B SKID	PI25	1/2"	FULL PORT	SOCKET	NO	Lever	Blue -White, Spears True Union 2000, or Equal	CONTRACTOR	On Peristaltic Pump Skid, See Specifications

DOWL Stanley Consultants INC.

MANUAL VALVE LIST - BALL

DOWL Project No.:	50206.01	Revision:	A
Stanley Project No:		Date:	4/10/2023
Client:	CBW	By:	GP
Location:	Wrangell, AK	Checked:	

Valve Number	Name	Line / Equip. Number	On P&ID	Size (in)	Type	End Type	Status	Actuation	Man/Model	Supplied By	Comments
HV-567	Orthophosphate Peristaltic Pump A Discharge Isolation Valev	P-503A/B SKID	PI25	1/2"	FULL PORT	SOCKET	NO	Lever	Blue -White, Spears True Union 2000, or Equal	CONTRACTOR	On Peristaltic Pump Skid, See Specifications
HV-701	OSHG Feed Water Booster Pump A Suction Isolation Valve	3/4"-PVC80-PW-702	PI26	1"	FULL PORT	SOCKET	NO	Lever	Spears True Union 2000 or Equal	CONTRACTOR	See Specifications
HV-702	Brine Outlet Drain Valve 1	1"-PE-BR-705	PI26	1"	BALL VALVE	SOCKET	NC	Lever	Spears True Union 2000 or Equal	CONTRACTOR	See Specifications
HV-703	OSHG Feed Water Booster Pump A Discharge Isolation Valve	3/4"-PVC80-PW-702	PI26	3/4"	FULL PORT	FIPT, 235 PSI	NO	Lever	Spears True Union 2000 or Equal	CONTRACTOR	See Specifications
HV-704	OSHG Feed Water Booster Pump B Suction Isolation Valve	1"-PVC80-PW-701	PI26	1"	FULL PORT	SOCKET	NO	Lever	Spears True Union 2000 or Equal	CONTRACTOR	See Specifications
HV-705	OSHG Brine Outlet Drain Valve 2	1/2"-PE-BR-705	PI26	1/4"	BALL VALVE	SOCKET	NC	Lever	Hayward TBH Series or Equal	CONTRACTOR	See Specifications
HV-706	OSHG Feed Water Booster Pump B Discharge Isolation Valve	3/4"-PVC80-PW-702	PI26	3/4"	FULL PORT	SOCKET	NO	Lever	Spears True Union 2000 or Equal	CONTRACTOR	See Specifications
HV-707	OSHG Water Softener Bypass Valve	3/4"-PVC80-PW-702	PI26	3/4"	FULL PORT	SOCKET	NO	Lever	Spears True Union 2000 or Equal	CONTRACTOR	See Specifications
HV-708	OSHG Softened Water Feed Sample 07/01 Isolation Valve	3/4"-PVC80-SW-703	PI26	1/4"	BALL VALVE	SOCKET	NC	Lever	Spears True Union 2000 or Equal	CONTRACTOR	See Specifications
HV-710	OSHG Softened Water Filter Inlet Isolation Valve	3/4"-PVC80-SW-703	PI26	3/4"	BALL VALVE	SOCKET	NO	Lever	Spears True Union 2000 or Equal	CONTRACTOR	See Specifications
HV-711	OSHG Softened Water Filter Outlet Isolation Valve	3/4"-PVC80-SW-703	PI26	3/4"	BALL VALVE	SOCKET	NO	Lever	Spears True Union 2000 or Equal	CONTRACTOR	See Specifications
HV-712	OSHG Brine Tank Fill Isolation Valve	1/4"-PE-SW-707	PI26	1/4"	BALL VALVE	SOCKET	NO	Lever	Hayward TBH Series or Equal	CONTRACTOR	See Specifications
HV-713	OSHG Potable Water Feed Filter Inlet Isolation Valve	3/4"-PVC80-PW-702	PI26	3/4"	FULL PORT	SOCKET	NO	Lever	Spears True Union 2000 or Equal	CONTRACTOR	See Specifications
HV-714	OSHG Potable Water Feed Filter Outlet Isolation Valve	3/4"-PVC80-PW-702	PI26	3/4"	FULL PORT	SOCKET	NO	Lever	Spears True Union 2000 or Equal	CONTRACTOR	See Specifications
HV-715	Brine Tank Outlet Valve	TK-700	PI26	1"	BALL VALVE	TBD	NO	Lever	OSHG VENDOR PACKAGE	CONTRACTOR	SEE OSHG SHOP DRAWINGS
HV-716	OSHG Brine Filter Inlet Isolation Valve	3/4"-PE-BR-705	PI26	3/4"	BALL VALVE	SOCKET	NO	Lever	Hayward TBH Series or Equal	CONTRACTOR	See Specifications
HV-717	OSHG Brine Filter Outlet Isolation Valve	3/4"-PE-BR-705	PI26	3/4"	BALL VALVE	SOCKET	NO	Lever	Hayward TBH Series or Equal	CONTRACTOR	See Specifications
HV-718	OSHG Skid 1 Inlet Isolation Valve	1/2"-PE-BR-705	PI26	1/2"	BALL VALVE	SOCKET	NO	Lever	Hayward TBH Series or Equal	CONTRACTOR	See Specifications
HV-719	OSHG Skid 2 Inlet Isolation Valve	1/2"-PE-BR-706	PI26	1/2"	BALL VALVE	SOCKET	NO	Lever	Hayward TBH Series or Equal	CONTRACTOR	See Specifications
HV-760	OSHG Bypass Valve	1"-PVC80-SW-716	PI26	1"	FULL PORT	SOCKET	NO	Lever	Spears True Union 2000 or Equal	CONTRACTOR	See Specifications
HV-790	OSHG Softened Water Pressure Indicator Isolation Valve	3/4"-PVC80-SW-702	PI26	1/2"	FULL PORT	SOCKET	NO	Lever	Spears True Union 2000 or Equal	CONTRACTOR	See Specifications
HV-791	OSHG Feed Water Booster Pump 1 Discharge Pressure Indicator Isolation Valve	3/4"-PVC80-PW-702	PI26	1/2"	FULL PORT	SOCKET	NO	Lever	Spears True Union 2000 or Equal	CONTRACTOR	See Specifications
HV-792	OSHG Feed Water Booster Pump 2 Discharge Pressure Indicator Isolation Valve	3/4"-PVC80-PW-702	PI26	1/2"	FULL PORT	SOCKET	NO	Lever	Spears True Union 2000 or Equal	CONTRACTOR	See Specifications
HV-770	OSHG Water Softener Inlet Isolation Valve	3/4"-PVC80-PW-702	PI26	3/4"	FULL PORT	SOCKET	NO	Lever	Spears True Union 2000 or Equal	CONTRACTOR	See Specifications
HV-771	OSHG Water Softener Inlet Isolation Valve	3/4"-PVC80-PW-702	PI26	3/4"	FULL PORT	SOCKET	NO	Lever	Spears True Union 2000 or Equal	CONTRACTOR	See Specifications
HV-TK705	OSHG Pressure Tank Drain Valve	3/4"-PVC80-PW-734	PI26	1/2"	FULL PORT	FIPT, 235 PSI	NO	Lever	Spears True Union 2000 or Equal	CONTRACTOR	See Specifications
HV-722	OSHG 1 Heat Exchanger Hot Side Inlet Isolation Valve	1"-PVC80-HS-711	PI27	1"	BALL VALVE	SOCKET	NO	Lever	Hayward TBH Series or Equal	CONTRACTOR	SEE OSHG SHOP DRAWINGS
HV-725	OSHG 1 Heat Exchanger Hot Side Bypass Valve	1"-PVC80-HS-712	PI27	1"	BALL VALVE	SOCKET	NO	Lever	Hayward TBH Series or Equal	CONTRACTOR	SEE OSHG SHOP DRAWINGS
HV-723	OSHG 1 Heat Echanger Cold Side Outlet Valve	1/2"-PVC80-SW-710	PI27	1/2"	BALL VALVE	SOCKET	NO	Lever	Hayward TBH Series or Equal	CONTRACTOR	SEE OSHG SHOP DRAWINGS
HV-721	OSHG 1 Reactor Instrumentation Drain Valve	EC-701	PI27	3/8"	BALL VALVE	SOCKET	NO	Lever	Hayward TBH Series or Equal	CONTRACTOR	SEE OSHG SHOP DRAWINGS
HV-726	OSHG 1 Heat Exchanger Hot Side Outlet Isolation Valve	2"-PVC80-HS-711	PI27	1"	BALL VALVE	SOCKET	NO	Lever	Hayward TBH Series or Equal	CONTRACTOR	SEE OSHG SHOP DRAWINGS
HV-724	OSHG 1 Outlet Drain Valve	1"-PVC80-HS-711	PI27	1/4"	BALL VALVE	SOCKET	NO	Lever	Hayward TBH Series or Equal	CONTRACTOR	SEE OSHG SHOP DRAWINGS
HV-747	Hypochorite Storage Tank 1 Outlet Drain Valve	2"-PVC80-HS-718	PI28	2"	BALL VALVE	SOCKET	NC	Lever	Hayward TBH Series or Equal	CONTRACTOR	SEE OSHG SHOP DRAWINGS
HV-745	Hypochlorite Dilution Panel Outlet Isolation Valve 2	1"-PVC-HS-717	PI28	1"	BALL VALVE	SOCKET	NC	Lever	Hayward TBH Series or Equal	CONTRACTOR	SEE OSHG SHOP DRAWINGS
HV-739	Hypochlorite Dilution Panel Bulk Hypo Inlet Isolation Valve	1"-PVC80-HSB-717	PI28	1"	BALL VALVE	SOCKET	NC	Lever	Hayward TBH Series or Equal	CONTRACTOR	Vented, See Specifications

DOWL Stanley Consultants INC.	**MANUAL VALVE LIST - BALL**	DOWL Project No.:	50206.01	Revision:	A
		Stanley Project No:		Date:	4/10/2023
		Client:	CBW	By:	GP
		Location:	Wrangell, AK	Checked:	

Valve Number	Name	Line / Equip. Number	On P&ID	Size (in)	Type	End Type	Status	Actuation	Man/Model	Supplied By	Comments
HV-728	Hydrogen Dilustion Blower 1 Condensate Drain	2"-PVC80-PA-719	PI28	1/2"	BALL VALVE	SOCKET	NO	Lever	Hayward TBH Series or Equal	CONTRACTOR	SEE OSHG SHOP DRAWINGS
HV-727	Hypochlroite Storage Tank 1 Outlet Isolation Valve	TK-701	PI28	2"	BALL VALVE	SOCKET	NO	Lever	Hayward TBH Series or Equal	CONTRACTOR	SEE OSHG SHOP DRAWINGS
HV-742	Hypochlorite Storage Tank 1 Vent to Atmosphere Isolation Valve	TK-701	PI28	2"	BALL VALVE	SOCKET	NO	Lever	Hayward TBH Series or Equal	CONTRACTOR	SEE OSHG SHOP DRAWINGS
HV-XXX	Dilution Panel Feed Vent Valve	1"-PVC80-SW-716	PI28	TBD	BALL VALVE	SOCKET	NO	Lever	Hayward TBH Series or Equal	VENDOR PACKAGE	SEE OSHG SHOP DRAWINGS
HV-YYY	Dilution Panel Feed Pressure Indicator Isolation	1"-PVC80-SW-716	PI28	TBD	BALL VALVE	SOCKET	NO	Lever	Hayward TBH Series or Equal	VENDOR PACKAGE	SEE OSHG SHOP DRAWINGS
HV-740	Hypochlorite Dilution Panel Outlet Isolation Valve 1	1"-PVC-HS-717	PI28	1"	BALL VALVE	SOCKET	NO	Lever	Hayward TBH Series or Equal	CONTRACTOR	SEE OSHG SHOP DRAWINGS
HV-733	OSHG 2 Heat Echanger Cold Side Outlet Valve	1/2"-PVC80-SW-721	PI29	1/2"	BALL VALVE	SOCKET	NO	Lever	Hayward TBH Series or Equal	CONTRACTOR	SEE OSHG SHOP DRAWINGS
HV-731	OSHG 2 Heat Exchanger Hot Side Inlet Isolation Valve	1"-PVC80-HS-722	PI29	1"	BALL VALVE	SOCKET	NO	Lever	Hayward TBH Series or Equal	CONTRACTOR	SEE OSHG SHOP DRAWINGS
HV-734	OSHG 2 Heat Exchanger Hot Side Bypass Valve	1"-PVC80-HS-723	PI29	1"	BALL VALVE	SOCKET	NC	Lever	Hayward TBH Series or Equal	CONTRACTOR	SEE OSHG SHOP DRAWINGS
HV-730	OSHG 2 Reactor Instrumentation Drain Valve	EC-702	PI29	3/8"	BALL VALVE	SOCKET	NC	Lever	Hayward TBH Series or Equal	CONTRACTOR	SEE OSHG SHOP DRAWINGS
HV-735	OSHG 2 Heat Exchanger Hot Side Outlet Isolation Valve	1"-PVC80-HS-722	PI29	1"	BALL VALVE	SOCKET	NO	Lever	Hayward TBH Series or Equal	CONTRACTOR	SEE OSHG SHOP DRAWINGS
HV-732	OSHG 2 Outlet Drain Valve	1"-PVC80-HS-722	PI29	1/4"	BALL VALVE	SOCKET	NO	Lever	Hayward TBH Series or Equal	CONTRACTOR	SEE OSHG SHOP DRAWINGS
HV-773	Hypochorite Storage Tank 2 Outlet Drain Valve	2"-PVC80-HS-727	PI30	2"	BALL VALVE	SOCKET	NC	Lever	Spears True Union 2000 or Equal	CONTRACTOR	See Specifications
HV-774	Hydrogen Dilustion Blower 2 Condensate Drain	2"-PVC80-PA-728	PI30	1/2"	BALL VALVE	SOCKET	NO	Lever	Spears True Union 2000 or Equal	CONTRACTOR	See Specifications
HV-772	Hypochlroite Storage Tank 2 Outlet Isolation Valve	TK-702	PI30	2"	BALL VALVE	SOCKET	NO	Lever	Spears True Union 2000 or Equal	CONTRACTOR	See Specifications
HV-769	Hypochlorite Storage Tank 2 Vent to Atmosphere Isolation Valve	TK-702	PI30	2"	BALL VALVE	SOCKET	NO	Lever	Spears True Union 2000 or Equal	CONTRACTOR	See Specifications
HV-748	Hypochlorite Peristaltic Pump A Inlet Isolation Valve	P-703A/B/C SKID	PI31	1/2"	BALL VALVE	SOCKET	NO	Lever	Blue -White, Spears True Union 2000, or Equal	CONTRACTOR	On Peristaltic Pump Skid, See Specifications
HV-764	Hypochlorite Discharge Pressure Indicator/Switch B Isolation Valve	P-703A/B/C SKID	PI31	1/2"	BALL VALVE	SOCKET	NO	Lever	Blue -White, Spears True Union 2000, or Equal	CONTRACTOR	On Peristaltic Pump Skid, See Specifications
HV-749	Hypochlorite Peristaltic Pump B Inlet Isolation Valve	P-703A/B/C SKID	PI31	1/2"	BALL VALVE	SOCKET	NO	Lever	Blue -White, Spears True Union 2000, or Equal	CONTRACTOR	On Peristaltic Pump Skid, See Specifications
HV-750	Hypochlorite Peristaltic Pump C Inlet Isolation Valve	P-703A/B/C SKID	PI31	1/2"	BALL VALVE	SOCKET	NO	Lever	Blue -White, Spears True Union 2000, or Equal	CONTRACTOR	On Peristaltic Pump Skid, See Specifications
HV-751	Hypochlroite Peristaltic Pump A Suction Isolation Valve	P-703A/B/C SKID	PI31	1/2"	BALL VALVE	SOCKET	NO	Lever	Blue -White, Spears True Union 2000, or Equal	CONTRACTOR	On Peristaltic Pump Skid, See Specifications
HV-752	Hypochlorite Calibration Column Drain Valve 1	P-703A/B/C SKID	PI31	1/2"	BALL VALVE	SOCKET	NO	Lever	Blue -White, Spears True Union 2000, or Equal	CONTRACTOR	On Peristaltic Pump Skid, See Specifications
HV-755	Hypochlroite Peristaltic Pump C Suction Isolation Valve	P-703A/B/C SKID	PI31	1/2"	BALL VALVE	SOCKET	NO	Lever	Blue -White, Spears True Union 2000, or Equal	CONTRACTOR	On Peristaltic Pump Skid, See Specifications
HV-754	Hypochlorite Calibration Column Drain Valve 3	P-703A/B/C SKID	PI31	1/2"	BALL VALVE	SOCKET	NO	Lever	Blue -White, Spears True Union 2000, or Equal	CONTRACTOR	On Peristaltic Pump Skid, See Specifications
HV-753	Hypochlorite Calibration Column Drain Valve 2	P-703A/B/C SKID	PI31	1/2"	BALL VALVE	SOCKET	NO	Lever	Blue -White, Spears True Union 2000, or Equal	CONTRACTOR	On Peristaltic Pump Skid, See Specifications
HV-761	Hypochlorite Calibration Column Fill Valve 1	P-703A/B/C SKID	PI31	1/2"	BALL VALVE	SOCKET	NO	Lever	Blue -White, Spears True Union 2000, or Equal	CONTRACTOR	On Peristaltic Pump Skid, See Specifications
HV-762	Hypochlorite Calibration Column Fill Valve 2	P-703A/B/C SKID	PI31	1/2"	BALL VALVE	SOCKET	NO	Lever	Blue -White, Spears True Union 2000, or Equal	CONTRACTOR	On Peristaltic Pump Skid, See Specifications
HV-763	Hypochlorite Discharge Pressure Indicator/Switch A Isolation Valve	P-703A/B/C SKID	PI31	1/2"	BALL VALVE	SOCKET	NO	Lever	Blue -White, Spears True Union 2000, or Equal	CONTRACTOR	On Peristaltic Pump Skid, See Specifications
HV-768	Hypochlorite Discharge B Isolaton Valve	P-703A/B/C SKID	PI31	1/2"	BALL VALVE	SOCKET	NC	Lever	Blue -White, Spears True Union 2000, or Equal	CONTRACTOR	On Peristaltic Pump Skid, See Specifications
HV-766	Hypochlorite Discharge A Isolation Valve	P-703A/B/C SKID	PI31	1/2"	BALL VALVE	SOCKET	NO	Lever	Blue -White, Spears True Union 2000, or Equal	CONTRACTOR	On Peristaltic Pump Skid, See Specifications

DOWL Project No:	50206.01		Revision:	A
Stanley Project No:			Date:	4/10/2023
Client:	CBW		By:	GP
Location:	Wrangell, AK		Checked:	

CHECK VALVE LIST

Valve Number	Name	Line / Equip. Number	On P&ID	Size (in)	Type	End Type	Status	Actuation	Man/Model	Supplied By	Comments
CHECK VALVES											
02-CV-1204	Saturator 1 Recycle Pump Discharge Check	3"-SS304-CW-202A	PI05	3"	Silent, Wafer	FL, 125/150	N/A	N/A	APCO Silent Check CSC	AWC	See AWC Document 17805-PI-LST-003 Specialty Items List
02-CV-1260	Saturator 1 Compressed Air Inlet Check	02-SAT-125	PI05	1/2"	In-Line, Spring	FNPT, 200#	N/A	N/A	MA Stewart MAS 700	AWC	See AWC Document 17805-PI-LST-003 Specialty Items List
02-CV-2204	Saturator 2 Recycle Pump Discharge Check	3"-SS304-CW-209	PI07	3"	Silent, Wafer	FL, 125/150	N/A	N/A	APCO Silent Check CSC	AWC	See AWC Document 17805-PI-LST-003 Specialty Items List
02-CV-2260	Saturator 2 Compressed Air Inlet Check	02-SAT-225	PI07	1/2"	In-Line, Spring	FNPT, 200#	N/A	N/A	MA Stewart MAS 700	AWC	See AWC Document 17805-PI-LST-003 Specialty Items List
02-CV-3204	Saturator 3 Recycle Pump Discharge Check	3"-SS304-CW-213	PI09	3"	Silent, Wafer	FL, 125/150	N/A	N/A	APCO Silent Check CSC	AWC	See AWC Document 17805-PI-LST-003 Specialty Items List
02-CV-3260	Saturator 3 Compressed Air Inlet Check	02-SAT-325	PI09	1/2"	In-Line, Spring	FNPT, 200#	N/A	N/A	MA Stewart MAS 700	AWC	See AWC Document 17805-PI-LST-003 Specialty Items List
CV-601	Filter 1 Air Scour Check Valve	6"-SS304-CA-601	PI10	6"	Double Door	FL, 125/150	N/A	N/A	APCO CDD or Equal	CONTRACTOR	See Specifications
CV-602	Filter 2 Air Scour Check Valve	6"-SS304-CA-601	PI11	6"	Double Door	FL, 125/150	N/A	N/A	APCO CDD or Equal	CONTRACTOR	See Specifications
CV-603	Filter 3 Air Scour Check Valve	6"-SS304-CA-601	PI12	6"	Double Door	FL, 125/150	N/A	N/A	APCO CDD or Equal	CONTRACTOR	See Specifications
CV-604	Filter 4 Air Scour Check Valve	6"-SS304-CA-601	PI13	6"	Double Door	FL, 125/150	N/A	N/A	APCO CDD or Equal	CONTRACTOR	See Specifications
CV-605	Filter 5 Air Scour Check Valve	6"-SS304-CA-601	PI14	6"	Double Door	FL, 125/150	N/A	N/A	APCO CDD or Equal	CONTRACTOR	See Specifications
CV-606	Filter 6 Air Scour Check Valve	6"-SS304-CA-601	PI15	6"	Double Door	FL, 125/150	N/A	N/A	APCO CDD or Equal	CONTRACTOR	See Specifications
CV-412	High Service Pump A Discharge Check	P-401A/B/C SKID	PI18	8"	Silent, Wafer	FL, 125/150	N/A	N/A	APCO Silent Check CSC or Equal	CONTRACTOR	On High Service Pump Skid, See Specifications
CV-413	High Service Pump B Discharge Check	P-401A/B/C SKID	PI18	8"	Silent, Wafer	FL, 125/150	N/A	N/A	APCO Silent Check CSC or Equal	CONTRACTOR	On High Service Pump Skid, See Specifications
CV-414	High Service Pump C Discharge Check	P-401A/B/C SKID	PI18	8"	Silent, Wafer	FL, 125/150	N/A	N/A	APCO Silent Check CSC or Equal	CONTRACTOR	On High Service Pump Skid, See Specifications
08-CV-8101	Compressor 1 Discharge Check Valve	COMPRESSOR PACKAGE	PI21	2"	Check, TBD	TBD	N/A	N/A	TBD	AWC	See AWC Document 17805-PI-LST-003 Specialty Items List
08-CV-8201	Compressor 2 Discharge Check Valve	COMPRESSOR PACKAGE	PI21	2"	Check, TBD	TBD	N/A	NA	TBD	AWC	See AWC Document 17805-PI-LST-003 Specialty Items List
CV-600A	Air Scour Blower 1 Check Valve	8"-SS304-CA-601	PI22	8"	Resilient Seat, Spring Return, Swing	GRV	N/A	NA	Victaulic Series 416 or Equal	CONTRACTOR	See specifications
CV-600B	Air Scour Blower 2 Check Valve	8"-SS304-CA-601	PI22	8"	Resilient Seat, Spring Return, Swing	GRV	N/A	NA	Victaulic Series 416 or Equal	CONTRACTOR	See specifications
CV-509	Caustic Peristaltic Pump A Check Valve	P-501A/B/C SKID	PI23	1/2"	True Union, Ball Check	SOCKET	N/A	N/A	Blue-White, Spears, Hayward, Or Equal	CONTRACTOR	On Peristaltic Pump Skid, See Specifications
CV-510	Caustic Peristaltic Pump B Check Valve	P-501A/B/C SKID	PI23	1/2"	True Union, Ball Check	SOCKET	N/A	N/A	Blue-White, Spears, Hayward, Or Equal	CONTRACTOR	On Peristaltic Pump Skid, See Specifications
CV-511	Caustic Peristaltic Pump C Check Valve	P-501A/B/C SKID	PI23	1/2"	True Union, Ball Check	SOCKET	N/A	N/A	Blue-White, Spears, Hayward, Or Equal	CONTRACTOR	On Peristaltic Pump Skid, See Specifications
CV-534	Coagulant Peristaltic Pump A Check Valve	P-502A/B SKID	PI24	1/2"	True Union, Ball Check	SOCKET	N/A	N/A	Blue-White, Spears, Hayward, Or Equal	CONTRACTOR	On Peristaltic Pump Skid, See Specifications
CV-537	Coagulant Peristaltic Pump B Check Valve	P-502A/B SKID	PI24	1/2"	True Union, Ball Check	SOCKET	N/A	N/A	Blue-White, Spears, Hayward, Or Equal	CONTRACTOR	On Peristaltic Pump Skid, See Specifications
CV-565	Orthophosphate Peristaltic Pump A Check Valve	P-503A/B SKID	PI25	1/2"	True Union, Ball Check	SOCKET	N/A	N/A	Blue-White, Spears, Hayward, Or Equal	CONTRACTOR	On Peristaltic Pump Skid, See Specifications
CV-566	Orthophosphate Peristaltic Pump B Check Valve	P-503A/B SKID	PI25	1/2"	True Union, Ball Check	SOCKET	N/A	N/A	Blue-White, Spears, Hayward, Or Equal	CONTRACTOR	On Peristaltic Pump Skid, See Specifications
CV-701	OSHG Feed Water Booster Pump 1 Check Valve	3/4"-PVC80-PW-701	PI26	3/4"	True Union, Ball Check	SOCKET	N/A	N/A	Blue-White, Spears, Hayward, Or Equal	CONTRACTOR	On Peristaltic Pump Skid, See Specifications

	DOWL Stanley Consultants INC.	CHECK VALVE LIST	DOWL Project No:	50206.01		Revision:	A
			Stanley Project No:			Date:	4/10/2023
			Client:	CBW		By:	GP
			Location:	Wrangell, AK		Checked:	

Valve Number	Name	Line / Equip. Number	On P&ID	Size (in)	Type	End Type	Status	Actuation	Man/Model	Supplied By	Comments
CV-702	OSHG Feed Water Booster Pump 1 Check Valve	3/4"-PVC80-PW-701	PI26	3/4"	True Union, Ball Check	SOCKET	N/A	N/A	Blue-White, Spears, Hayward, Or Equal	CONTRACTOR	On Peristaltic Pump Skid, See Specifications
CV-703	Water Softener Brine Feed Check Valve	3/8"-PE-BR-715	PI26	3/8"	True Union, Ball Check	SOCKET	N/A	N/A	Hayward TC Series or Equal	CONTRACTOR	SEE OSHG SHOP DRAWINGS
CV-704	OSHG 1 Brine Feed Check Valve 1	EC-701 SKID	PI27	1/2"	CHECK	TBD	N/A	N/A	OSHG VENDOR PACKAGE	CONTRACTOR	SEE OSHG SHOP DRAWINGS
CV-705	OSHG 1 Brine Feed Check Valve 2	EC-701 SKID	PI27	1/2"	CHECK	TBD	N/A	N/A	OSHG VENDOR PACKAGE	CONTRACTOR	SEE OSHG SHOP DRAWINGS
CV-706	OSHG 1 Brine Feed Check Valve 3	EC-701 SKID	PI27	1/2"	CHECK	TBD	N/A	N/A	OSHG VENDOR PACKAGE	CONTRACTOR	SEE OSHG SHOP DRAWINGS
CV-744	Hypcholorite Dilution Panel Check Valve	1"-PVC80-HS-717	PI28	1"	CHECK	TBD	N/A	N/A	OSHG VENDOR PACKAGE	CONTRACTOR	SEE OSHG SHOP DRAWINGS
CV-707	OSHG 2 Brine Feed Check Valve 1	EC-702 SKID	PI29	1/2"	CHECK	TBD	N/A	N/A	OSHG VENDOR PACKAGE	CONTRACTOR	SEE OSHG SHOP DRAWINGS
CV-708	OSHG 2 Brine Feed Check Valve 2	EC-702 SKID	PI29	1/2"	CHECK	TBD	N/A	N/A	OSHG VENDOR PACKAGE	CONTRACTOR	SEE OSHG SHOP DRAWINGS
CV-709	OSHG 2 Brine Feed Check Valve 3	EC-702 SKID	PI29	1/2"	CHECK	TBD	N/A	N/A	OSHG VENDOR PACKAGE	CONTRACTOR	SEE OSHG SHOP DRAWINGS
CV-758	Hypochlorite Peristaltic Pump A Check Valve	P-703A/B/C	PI31	1/2"	True Union, Ball Check	SOCKET	N/A	N/A	Blue-White, Spears, Hayward, Or Equal	CONTRACTOR	On Peristaltic Pump Skid, See Specifications
CV-759	Hypochlorite Peristaltic Pump B Check Valve	P-703A/B/C	PI31	1/2"	True Union, Ball Check	SOCKET	N/A	N/A	Blue-White, Spears, Hayward, Or Equal	CONTRACTOR	On Peristaltic Pump Skid, See Specifications
CV-760	Hypochlorite Peristaltic Pump C Check Valve	P-703A/B/C	PI31	1/2"	True Union, Ball Check	SOCKET	N/A	N/A	Blue-White, Spears, Hayward, Or Equal	CONTRACTOR	On Peristaltic Pump Skid, See Specifications

	DOWL Stanley Consultants INC.	**YARD (GATE) VALVE LIST**	DOWL Project No.:	50206.01	Revision: A
			Client:	CBW	Date: 4/10/2023
			Location:	Wrangell, AK	By: GP
					Checked:

Valve Number	Name	Line / Equip. Number	On P&ID	Size (in)	Type	End Type	Status	Actuation	Man/Model	Supplied By	Comments
GATE VALVES											
HV-103	Raw Water Tie-In Yard Valve 1	12"	PI03	12"	Resilient Wedge	MJ	NO	Non-Rising Stem, Nut	Mueller A-2361 or Equal	CONTRACTOR	
HV-104	Raw Water Tie-In Yard Valve 2	12"	PI03	12"	Resilient Wedge	MJ	NC	Non-Rising Stem, Nut	Mueller A-2361 or Equal	CONTRACTOR	Sacrificial Valve for Sequencing
HV-418	High Service Pump Discharge Tie-In Yard Valve	12"	PI18	12"	Resilient Wedge	MJ	NO	Non-Rising Stem, Nut	Mueller A-2361 or Equal	CONTRACTOR	
HV-419	High Service Pump Temporary Discharge Yard Valve	6"	PI18	6"	Resilient Wedge	MJ	NC	Non-Rising Stem, Nut	Mueller A-2361 or Equal	CONTRACTOR	Sacrificial Valve for Sequencing
HV-350	Backwash Supply Yard Valve	12"	PI19	12"	Resilient Wedge	MJ	NO	Non-Rising Stem, Nut	Mueller A-2361 or Equal	CONTRACTOR	

DOWL Stanley Consultants INC.	**MANUAL VALVE LIST - THREE WAY**	DOWL Project No.:	50206.01	Revision:	A
		Client:	CBW	Date:	4/10/2023
		Location:	Wrangell, AK	By:	GP
				Checked:	

Valve Number	Name	Line / Equip. Number	On P&ID	Size (in)	Type	End Type	Status	Actuation	Man/Model	Supplied By	Comments
THREE WAY BALL VALVES											
HV-515	Caustic Peristaltic Pump Discharge Selection Valve	P-501A/B/C SKID	PI23	1/2"	Full Port	Socket	N/A	Lever	Blue-White, Spears, Hayward, or Equal	Contractor	On Peristaltic Pump Skid, See Specifications
HV-720	OSHG 1 Softened Water Feed Three Way Valve	1/2"-PE-SW-703	PI27	1/2"	Full Port	Socket	N/A	Lever	Hayward, Spears, or Equal	Contractor	See OSHG Shop Drawings
HV-729	OSHG 2 Softened Water Feed Three Way Valve	1/2"-PE-SW-704	PI29	1/2"	Full Port	Socket	N/A	Lever	Hayward, Spears, or Equal	Contractor	See OSHG Shop Drawings
HV-765	Hypochlorite Peristaltic Pump Discharge Selection Valve	P-703A/B/C SKID	PI31	1/2"	Full Port	Socket	N/A	Lever	Blue-White, Spears, Hayward, or Equal	Contractor	On Peristaltic Pump Skid, See Specifications

DOWL Stanley Consultants INC.	**MANUAL VALVE LIST NEEDLE**	DOWL Project No:	50206.01	Revision:	A
		Stanley Project No:		Date:	4/10/2023
		Client:	CBW	By:	GP
		Location:	Wrangell, AK	Checked:	

Valve Number	Name	Line / Equip. Number	On P&ID	Size (in)	Type	End Type	Status	Actuation	Man/Model	Supplied By	Comments
NEEDLE VALVES											
03-HV-1406	Filter 1 Turbidimeter Drain Valve	03-TK-140	PI10	1/4"	Needle Valve	TBC	N/A	Screw	Hach	AWC	See AWC Document 17805-PI-LST-002 Manual Valve List
03-HV-1606	Filter 2 Turbidimeter Drain Valve	03-TK-160	PI11	1/4"	Needle Valve	TBC	N/A	Screw	Hach	AWC	See AWC Document 17805-PI-LST-002 Manual Valve List
03-HV-1806	Filter 3 Turbidimeter Drain Valve	03-TK-180	PI12	1/4"	Needle Valve	TBC	N/A	Screw	Hach	AWC	See AWC Document 17805-PI-LST-002 Manual Valve List
03-HV-2406	Filter 4 Turbidimeter Drain Valve	03-TK-240	PI13	1/4"	Needle Valve	TBC	N/A	Screw	Hach	AWC	See AWC Document 17805-PI-LST-002 Manual Valve List
03-HV-2606	Filter 5 Turbidimeter Drain Valve	03-TK-260	PI14	1/4"	Needle Valve	TBC	N/A	Screw	Hach	AWC	See AWC Document 17805-PI-LST-002 Manual Valve List
03-HV-2806	Filter 6 Turbidimeter Drain Valve	03-TK-280	PI15	1/4"	Needle Valve	TBC	N/A	Screw	Hach	AWC	See AWC Document 17805-PI-LST-002 Manual Valve List

SECTION 40 41 13 – PROCESS PIPING HEAT TRACING

PART 1 -- GENERAL

1.1 REQUIREMENTS

A. This section includes providing heat tracing tape and jacketed insulation for freeze protection. Pipe insulation system shall consist of heat tracing cable, pipe insulation, metal jacketing, and all required installation kits and accessories.

B. Heat tracing shall be installed as indicated in the drawings and listed herein.
   1. Above grade, exterior hypochlorite injection tubing between control room and injection point 1 in new WTP Building.

1.2 RELATED SECTIONS

A. The following sections apply to the work of this section.
   1. Section 40050 Exposed Piping Installation

1.3 CODES

A. The work of this section shall comply with the current editions of the following codes as adopted by the City.
   1. Uniform Building Code
   2. Uniform Mechanical Code
   3. Uniform Plumbing Code
   4. Uniform Fire Code
   5. National Electrical Code

1.4 STANDARDS

A. The current editions of the following standards apply to the work of this section.
   1. ASTM
   2. Underwriters Laboratory (UL)

1.5 SUBMITTALS

A. The following shall be submitted in compliance with Section 013300.
   1. Shop drawings of all thermal insulation system components with manufacturer's data on materials, insulation, electric heat tracing cable, and aluminum jackets.
   2. Operation and maintenance manuals as applicable for thermal insulation system components.

1.6 QUALITY ASSURANCE

A. Manufacturers shall have supplied similar products on projects of similar size and complexity in recent years.

PART 2 -- PRODUCTS

2.1 GENERAL

A. The Contractor shall insulate all piping identified on the Contract Drawings.

B. All components of the insulation system including covering, mastics, and adhesives shall have a flame-spread rating of not over 25 and a smoke development rating of not over 50. Ratings shall be as established by tests in accordance with ASTM E 84 standards.

C. Heat tracing cable and insulation shall be installed in strict accordance with manufacturer instructions.

D. Contractor shall supply all kits, seals, sealants, tape, tools, and other accessories required for successful installing of heat tracing cable, insulation, and jacketing.

E. All insulation shall be covered with aluminum jacketing having a factory-attached moisture barrier. Jackets for fittings shall consist of precision-formed smooth-sided sections and shall be sized to cover and protect the insulated fitting.

F. All insulation system components shall be suitable for operation in a Class 1, Division 1 environment.

2.2 MATERIALS

A. Heat Tracing Cable
   1. Heat tracing cable shall be self-regulating industrial grade heating cable to be applied to the indicated pipe runs. Cable shall be braided, with a heating capacity of 5 to 10 watts per foot using 120 Volt single-phase electrical wiring.
   2. Heat tracing cable shall be UL approved and shall operate without the use of thermostats.

B. Power Connection Kit
   1. Provide pipe stand and power connection/junction kit for connection of heat trace and power supply capable of supplying up to three heating cables.
   2. Provide Raychem JBS-100, similar junction box with LED light indicating when power is supplied to the heating cable.
   3. Install 24” above floor or top of tanks.

C. Insulation
   1. Insulation shall be a pre-molded fiberglass or pre-molded foamed urethane. Maximum “K” factor shall be 0.25. Minimum insulation thickness for pipes 6-inches in diameter or less shall be 1 inch.

D. Jacketing and strapping
   1. Jacketing shall be Type 3105/3003 aluminum alloy, H14 temper, with a factory-applied 3 mil polyfilm moisture barrier. Minimum allowable thickness shall be 0.024 inches. Jacketing shall comply with ASTM C1729. Alloys shall comply with ASTM B209.
   2. Strapping shall be used to affix jackets to insulated pipe. Strapping shall be Type 304 or Type 316 stainless steel. Strapping shall be minimum ½ inches wide by minimum 0.020 inches thick.
   3. Jacketing and flashing sealants shall be vapor-retarder type, moisture and water resistant, non-hardening and flexible with a service temperature range from -40°F to 250°F. Jacketing and flashing sealant shall be Childers, Foster, or approved equal.

2.3 MANUFACTURERS

A. Heat Tracing Cable
   1. Heat tracing cable shall be supplied by Nelson, Raychem, or approved equal.

B. Insulation
   1. Insulation shall be supplied by Owens-Corning or approved equal.

C. Jacketing
   1. Jacketing shall be supplied by ITW or approved equal.

PART 3 -- EXECUTION

3.1 INSTALLATION

A. All insulation system components shall be installed in accordance with the with the manufacturer recommendations.

   1. Verify cable is not damaged through resistivity test on the cable before final connections are completed.

END OF SECTION

SECTION 40 61 13 – PROCESS CONTROL SYSTEM GENERAL PROVISIONS

PART 1 - GENERAL

1.1 SUMMARY

A. Section Includes:
   1. This section specifies requirements which are applicable to all process control, instrumentation, communication, and signal systems.
   2. This section specifies roles and responsibilities for the scope of work under the Section.
   3. This project requires the interface with existing systems that must be sequenced and maintained operational. Contractor and Systems Integrator will have to support all temporary controls and networks.
   4. Electrical requirements applicable to this work include those specified in Division 26.

B. Related Sections:
   1. Section 40 61 95 – Process Control Descriptions.
   2. Section 40 61 96 – Process Control Narratives.

1.2 DEFINITIONS

A. General: Definitions of terminology related to Instrumentation and Industrial Electronic Systems used in the specifications shall be as defined in IEEE 100, ISA S51.1, and NEMA ICS 1.

B. Two-Wire Transmitter: A transducer which derives operating power supply from the signal transmission circuit and requires no separate power supply connections. A two-wire transmitter produces a 4 to 20 milliampere current regulated signal in a series circuit with a 24VDC driving potential and a maximum circuit resistance of 600 ohms.

C. Four-Wire Transmitter: A transducer which derives operating power from separate power supply connections. A four-wire transmitter produces a 4 to 20 mA current regulated signal in a series circuit with a maximum circuit resistance of 600 ohms. Four-wire transmitters typically require 120 VAC or 24 VDC input power supply.

D. Panel: An instrument support system which may be a flat surface, a partial enclosure, or a complete enclosure for instruments and other devices used in process control systems including consoles, cabinets and racks. Panels provide mechanical protection, electrical isolation, and protection from dust, dirt, moisture, and chemical contaminants which may be present in the atmosphere.

E. PCIS: Process Control and Instrumentation Systems.

F. Panel Builder: A firm engaged in the business of instrumentation component purchase, system and panel assembly.

G. Systems Integrator: A firm engaged in the business of control system programming and integration.

1.3 SYSTEM DESCRIPTION

A. Instrumentation and Control System:
   1. The work consists of the procurement, coordination, installation, configuration, testing and commissioning of process instrumentation, controls, communications, networks, alarm notifications, and new PLC-based control system as well as the installation and development of new software applications.
   2. There are a number of control panels, MCCs, network devices, and variable frequency drives. The Systems Integrator shall review and coordinate system requirements with the contractor for this equipment. Supervisory monitoring and control of these vendor packages shall be incorporated into the SCADA software. Monitoring and control shall be provided on a dedicated SCADA computer. It is the Systems Integrator's responsibility to consult with vendor of systems for mapping, alarms, and control interface.
   3. Motor control centers shall be integrated into the network for both monitoring and control. It is the responsibility of the Contractor to consult with both the Systems Integrator and vendor of systems for mapping, alarms, and control interface.
   4. Equipment demolished from the existing control system shall be offered to be turned over to the Owner.
   5. Fabrication of all control panels except those provided by DAF manufacturer.
   6. Transfer switch and generator monitoring.
   7. Addition of firewalls and VPN access for system and alarm monitoring, as required.
   8. Addition of on-call operator alarm notification.
   9. The above is a general summary of the major items and is not intended to be all inclusive.

B. Programming:
   1. Programming shall be provided per Section 40 61 96, "Process Control Narratives."
   2. Include hours in proposal to make owner-desired programming changes for a 12-month period after acceptance.

C. Device Configuration:
   1. Systems Integrator shall be responsible for setting up meetings to coordinate the plant control system and device configuration of all equipment.
   2. Systems Integrator shall gather all existing IP addresses, develop new IP address list and present in submittal of network architecture.

1.4 QUALITY ASSURANCE

A. References:
   1. This section contains references to the following documents. They are a part of this section as specified and modified. Where a referenced document contains references to other standards, those documents are included as references under this section as if referenced directly. In the event of conflict between the requirements of this section and those of the listed documents, the requirements of this section shall prevail.
   2. Unless otherwise specified, references to documents shall mean the documents in effect at the time of Advertisement for Bids or Invitation to Bid (or on the effective date of the Agreement if there were no Bids).
   3. If referenced documents have been discontinued by the issuing organization, references to those documents shall mean the replacement documents issued or otherwise identified by that organization or, if there are no replacement documents, the last version of the document before it was discontinued.
   4. Where document dates are given in the following listing, references to those documents

shall mean the specific document version associated with that date, regardless of whether the document has been superseded by a version with a later date, discontinued or replaced.

Reference	Title
IEEE 100	Standard Dictionary of Electrical and Electronics Terms
ISA S5.4	Instrument Loop Diagrams
ISA S20	Specification Forms for Process Measurement and Control Instrumentation, Primary Elements, and Control Valves
ISA S51.1	Process Instrumentation Terminology
ISA TR20.00.01	Specification Forms for Process Measurement and Control Instruments Part 1: General Considerations
NEMA ICS 1	General Standards for Industrial Control and Systems
NFPA 70	National Electric Code (NEC)

B. Contractor Provided Services:
   1. Contractor is responsible for contracting with a qualified Panel Builder to supply and test all control panels and control components, including PLC, PLC I/O cards and all other required control system components as shown in the drawings and specifications. Contractor is responsible for installation of all control panels and MCCs.
   2. Contractor is responsible for coordinating with Systems Integrator to ensure all PCIS work requirements are met in a timely and workmanlike manner.
   3. This project requires the interface with existing systems that must be sequenced and maintained operational. Contractor will have to coordinate with the Systems Integrator to support all temporary controls and networks.

C. Owner Provided Services:
   1. Owner is responsible for contracting with a qualified Systems Integrator to provide a complete and functional system as shown and specified.

D. Systems Integrator Responsibility:
   1. General
      a. The Systems Integrator is responsible for all programming required to provide a complete and functional system as shown and specified.
      b. The Systems Integrator is responsible for all integration with and reprogramming of Owner's existing water and wastewater SCADA system.
      c. The Systems Integrator is responsible for procurement of all SCADA software.
      d. The specified control system and instrumentation integration including high-service pump system, balance of plant (BOP) operations and other non-DAF manufacturer systems, instrument calibration, instrument configuration, control panel coordination and configuration, VFD communication and configuration as well as coordination with the DAF manufacturer, testing, start-up, operational testing, temporary programming of existing systems, support commissioning of all pumps,

valves, control panels, etc., and training shall be performed by a Systems Integrator staffed with qualified personnel, possessing necessary equipment and experience in performing similar installations. With the exception of VFD coordination, the Systems Integrator is not responsible for any programming that is controlled from the DAF manufacturer's control system.

e. The overall system performance shall be demonstrated to and accepted by Owner.
f. The application software packages shall be latest versions available, or compatible with existing software currently in use, as specified in Section 40 68 13.

2. Systems Integrator Qualifications:
   a. Systems Integrator shall meet the following requirements:
      1) The Systems Integrator shall have personnel with experience in performing three similar successful projects in the last five years with one project currently in progress or competed within the last two years.
      2) The Systems Integrator shall employee at least one qualified Professional Electrical or Controls Engineer registered in the State of Alaska

3. Pre-Submittal Conference:
   a. Schedule a pre-submittal conference with the Owner/Engineer, Contractor, Systems Integrator and DAF equipment supplier within 30 calendar days after Contract award to discuss the work, equipment, submittal format, and establish the framework for project coordination and communication.
   b. The pre-submittal conference will not replace the Product and Shop Drawing Submittal review process.

E. Process Equipment Coordination
1. Division 40 specified equipment shall be coordinated for proper operation with equipment related process equipment specified in other Divisions.
2. Equipment shall be integrated, furnished, and installed in conformance with the drawings, specifications, and the recommendations of the equipment manufacturer and the related processes equipment manufacturers.
3. Panel Builder shall obtain manufacturer's technical information for items of equipment not provided with, but directly connected to, the control system. Provide the

   necessary coordination and components for correct signal interfaces between specified equipment and the control system. Do not send requests for memory mapping to Engineer, Owner or General Contractor. Pick up phone and call equipment suppliers for information.
4. Systems Integrator shall coordinate with project subcontractors and equipment suppliers.
5. Systems Integrator shall provide installation supervision for the duration of the project.
6. Conflicts between the plans, specifications, manufacturer/vendor drawings and installation instructions, etc., shall be presented to the Engineer for resolution before proceeding.

F. Factory Acceptance Test (FAT):
1. Refer to Section 40 61 21.

1.5 ENVIRONMENTAL CONDITIONS

A. General:
1. Data communication and process control equipment shall suitable for operation in indoor

locations and in outdoor locations, as required.

B. Corrosive Locations:
   1. Corrosive locations shall be as specified in Division 26.

C. Hazardous (Classified) Areas:
   1. Hazardous areas shall be as specified in Division 26 and as indicated on the plans.

1.6 FUNCTIONAL REQUIREMENTS

A. General:
   1. The instrumentation and control system functions are shown on the drawings and specified in subsequent sections of Division 40. The Systems Integrator drawings and integration practices shall be as defined in IEEE 100, ISA S51.1, and NEMA ICS 1.

1.7 SUBMITTALS

A. Submittal Drawings:
   1. General:
      a. The Panel Builder shall prepare detailed installation drawings as specified below.
         1) Drawings prepared in AutoCAD version 2021 or later with borders and title blocks identifying the project, system, revisions to the drawing, and type of drawing. Each revision of a drawing shall include the date and description of the revisions.
         2) Drawing prints shall be 11" x 17" with a minimum lettering size of 1/8". Drawings shall be generated using Owner furnished drawing borders and title blocks, and in adherence to Owner's drawing standards.
         3) Diagrams shall carry a uniform and coordinated set of wire numbers and terminal block numbers in compliance with panel wiring, Section 40 67 00, to permit cross- referencing between contract documents and the drawings prepared by the Contractor.
         4) Drawings shall include the letterhead or title block of the Panel Builder. The title block shall include, as a minimum, the Panel Builder's registered business name and address, project name, drawing name, revision level, and personnel responsible for the content of the drawing

   2. Connection Diagrams:
      a. Show components of a control panel in an arrangement similar to the actual layout of the panel including internal wiring between devices within the panel. Show terminal blocks used for internal wiring or field wiring, identified as such. Indicate insulation color code, signal polarities, and wire numbers and terminal block numbers.

   3. Interconnection Diagrams:
      a. Show panels, panel devices, and field devices with wire numbers, cable numbers, raceway numbers, terminal box numbers, terminal block numbers, panel numbers, and field device tag numbers.

   4. Elementary or Schematic Diagram:
      a. Shows, by means of graphic symbols, the electrical connections and functions of a

specific circuit arrangement. Provide schematics for internal panel power distribution, lighting, and any panel HVAC.

5. General Layout:
   a. Show the dimensioned external and interior control panel views with components and Bill of Material.

6. Network Block Diagram:
   a. A network block diagram is a diagram of the overall SCADA system, with annotated boxes to show the primary network components (controllers, hubs, switches, computers, displays), and annotated interconnecting lines that show the system communication media and communication protocols.

7. Loop Diagrams:
   a. Provide loop diagrams for analog and discrete loops interconnected into the control system circuits:
      1) Prepare per ISA S5.4 – Loop Diagrams using the Example Loop Diagrams where included.
      2) Show device element wiring of the system.
      3) Show circuits for hardwired device interlocks.
      4) Show circuit cable and wire cable numbers, signal polarities, and terminal block numbers.

B. The following information shall be provided in accordance with and Section 01 33 00:
   1. A copy of this specification section, with addendum updates included, and all referenced and applicable sections, with addendum updates included, with each paragraph check-marked to indicate specification compliance or marked to indicate requested deviations from specification requirements. A check mark (□) shall denote full compliance with a paragraph as a whole.
      a. If deviations from the specifications are indicated, and therefore requested by the Contractor, each requested deviation shall be underlined and denoted by a number in the margin to the right of the identified paragraph, referenced to a detailed written explanation of the reasons for requesting the deviation.
      b. The Engineer shall be the final authority for determining acceptability of requested deviations. The remaining portions of the paragraph not underlined will signify compliance on the part of the Contractor with the specifications.

   2. Detailed product literature, showing product specifications and model number breakdown. Mark to denote features and options included. Include only the applicable pages.

   3. Manufacturer's installation manual excerpts, as to be used for this project:
      a. Installation details/drawings.
      b. Electrical connection diagrams
      c. Calibration procedures.

   4. Drawings and diagrams specified in paragraph 1.6 Submittal Drawings.
   5. Nameplate list with material, tag number and description as specified.
   6. Data Sheets in accordance with ISA 20 for each instrument. Identical instruments may be submitted with one common ISA Data Sheet and accompanying tag list.

C. Review the submittal requirements specified in other Division 40 sections.

1.8 WARRANTY

A. Systems Integrator to guarantee satisfactory performance the PCIS for a period of one year after Substantial Completion. Systems Integrator will perform the following promptly and at no cost to the Owner:
   1. Troubleshoot and remedy all major deficiencies in the PCIS for a period of two years.
   2. Make minor edits and improvements to the PCIS for a period of one year.

B. The Engineer shall have discretion to make the determination between a minor and non-minor edit or improvement.

PART 2 - PRODUCTS

2.1 GENERAL

A. Materials and Quality:
   1. Equipment material shall be new, free from defects, and industrial-grade, as specified. Each type of instrument, instrument accessory, and device used throughout the work shall be manufactured by one firm, where possible.
   2. Electronic equipment shall be of solid-state construction with printed or etched circuit boards of glass epoxy of sufficient thickness to prevent warping.
   3. The control system components shall, when practical, be of one manufacturer.
   4. The components, modules, devices, and control system equipment shall be recognized industrial quality products. Recognized commercial or office grade products are prohibited.

2.2 NAMEPLATES

A. Nameplates shall be provided for all field mounted instrument, analyzer, or equipment specified in Division 40. Nameplate lettering shall include the equipment or instrument loop title and the instrument or equipment tag number, where nameplate engraving is not specified or shown. Nameplates shall be machine engraved black phenolic with white 5/32-inch-high lettering, as minimum, unless otherwise specified or shown. Nameplate wording may be changed without additional cost or time, if changes are made prior to commencement of engraving.

B. Nameplates shall be attached to support hardware with a minimum of two self-tapping type 316 stainless steel screws in a readily visible location so the nameplate will remain to identify the service when the device is removed. Field instrument nameplates shall be attached with braided stainless-steel straps where not stand mounted.

2.3 PRODUCT DATA

A. The following Product Data shall be provided in accordance with Section 01 33 00.
   1. Record drawings specified by paragraph 1.6 Submittals and the schedules included in Division 40 shall be provided in the latest AutoCAD format and PDF format on CD.
      a. Provide record drawing prints of all drawings following project start-up, but prior to

acceptance of the work showing the final constructed state of the instrumentation and control systems.

2. Operating and maintenance information shall be provided in accordance with Division 01. Include the following in each Operation and Maintenance Manual:
   a. Final reviewed Submittals, including revised as-built record drawings.
   b. Manufacturer's operation and maintenance instructions.
   c. Written record of menu configuration, jumpers, switch settings, and other configurable parameters for each instrument.

PART 3 - EXECUTION

3.1 INSTALLATION

A. General:
   1. Equipment shall be installed in locations that are accessible for operation and maintenance services. Equipment not accessible shall be reinstalled at no cost to the Owner.
   2. Installation, calibration, settings, and testing procedures as specified in Division 40.

B. Field Equipment:
   1. Equipment shall be provided with ports and adjustable items accessible for in-place testing and calibration. Install equipment between 48 inches and 60 inches above the floor or permanent work platform. Equipment shall be mounted to avoid shock or vibration that may impair operation. Equipment shall be mounted for unobstructed access and walkways. Equipment support systems shall not be attached to handrails, process piping or mechanical equipment.
   2. Instruments and cabinets supported by concrete walls shall be spaced 5/8 inch by framing channel between instrument or cabinet and wall. Block wall shall have additional installation supports, as required, to avoid damage to the wall. Equipment supports shall be hot-dip galvanized after fabrication or shall be 316L stainless steel, as shown or specified.
   3. Support systems including panels shall be designed in accordance with Division 01 to prevent deformation greater than 1/8 inch in any direction under the attached equipment load and under an external load of 200 pounds.
   4. In wet or outdoor areas, conduit penetrations into instrument housing shall be made through the bottom (preferred) or side of enclosures to minimize water entry from around or from inside of conduits. Provide conduit hubs for connections and waterproof mastic for moisture sealant.
   5. Nameplates shall be provided for all field mounted equipment. Nameplates shall be attached to support hardware with a minimum of two self-tapping Type 316 stainless steel screws in a readily visible location, but such that if the field device is changed out, the nameplate will remain to identify the service.

C. Electrical Power Connections:
   1. Equipment electric power wiring shall comply with Division 26. Power disconnect switches shall be provided within sight of equipment and labeled to indicate the specific equipment served and the power source location. "Within sight of" is defined as having an unobstructed view from the equipment served and within 50 feet of the equipment served.

2. Equipment power disconnect switches shall be mounted between 36 inches and 72 inches above the floor or permanent work platform. Where equipment location requirements cannot be met by a single disconnect switch, provide two disconnect switches: one at the equipment and one at the work platform.
3. Provide a surge arrestor on each 120 VAC disconnect switch serving equipment located outdoors. Surge arrestor shall be Telematic, LP Series or equal.

D. Signal Connections:
1. Equipment electric signal connections shall be made on terminal blocks or by locking plug and receptacle assemblies. Flexible cable, receptacle and plug assemblies shall be used where shown or specified.
2. Jacketed flexible conduit shall be used between equipment and rigid raceway systems. Flexible cable assemblies may be used where plug and receptacle assemblies are provided and the installation is not subject to mechanical damage in normal use. The length of flexible conduit or cord assemblies shall not exceed 2 feet except where sufficient length is required to allow withdrawal of instruments for maintenance or calibration without disconnection of conduit or cord assemblies.

3.2 FIELD TESTS AND INSPECTIONS

A. Delivery Inspection:
a. The Contractor shall notify the Owner's Representative upon arrival of any material or equipment to be incorporated into the work. The Contractor shall remove protective covers or otherwise provide access in order that the Owner's Representative may inspect such items.

B. Inspection and Installed Tests:
a. Refer to Section 40 61 21.

END OF SECTION

SECTION 40 61 96 – PROCESS CONTROL NARRATIVES

PART 1 - GENERAL

1.1 SUMMARY

A. This section provides the detailed requirements for control-loop programming. These requirements can be modified during commissioning as required with Engineer approval.

B. Each control narrative includes the following components:
   1. Overview: Description of the control-loop.
   2. Instruments: Instruments used in the control-loop functionality.
   3. Equipment: Equipment controlled by the control-loop.
   4. Programming Interlocks: Permissives that must be met as a precondition to performing the control loop in auto.
   5. SCADA Functionality: SCADA interface requirements required for control loop.
   6. PLC Functionality: Control-loop function to be performed by PLC.
   7. Alarms: Alarm functions related to control-loop. Alarms listed are for guidance only and are not meant to be an exhaustive list of alarms. Additional alarms may be requested during commissioning.

1.2 DEFINITIONS

A. Lead/Lag/Standby Configuration: Lead motor is determined by Available motor with the least amount of runtime hours in the last 24 hours. Lag is determined by Available motor with least amount of runtime hours in the last 24 hours with the exception of the Lead motor. Standby is the remaining motor.

B. Available Motor: HOA switch in Auto and motor is not faulted.

C. PID Controller: A control loop common to industrial processes that uses a process variable (feedback), control-variable (output), and setpoint to control a process. Proportional “P”, Integral “I” and Derivative “D” parameters are applied to the PID controller. An error is calculated between the setpoint and process variable and the control variable is adjusted based on the proportional PID parameters applied to the controller in order to maintain the setpoint value. The D term is commonly ignored in PID controllers.

1.3 SUBMITTALS

A. Provide a copy of this specification section with all addendum updates included, with each paragraph check-marked to indicate specification compliance or marked to indicate the requested deviations from the specification requirements in accordance with Division 01.

PART 2 – PRODUCTS (NOT USED)

PART 3 - EXECUTION

3.1 CONTROL NARRATIVES

A. The following is a list of all control narratives.

Control Narrative Number	Description
1	Chemical Injection Systems
2	Dissolved Air Flotation (DAF) and Mixed Media Gravity Filtration (See AWC document 17805-PR-NAR-001 for narrative)
3	Hach RTC-COAG
4	Chlorine Contact Basins
5	Clearwell
6	High-Service Pumps
7	Potable Storage
8	Waste Handling

B. Control Narrative 1: Chemical Injection Systems

Overview	The chemical injection systems category includes: • Sodium hypochlorite generation, storage, and injection equipment • Caustic storage and injection equipment • Coagulant storage and injection equipment • Orthophosphate storage and injection equipment	Setpoints (~ indicates vendor provided)
Instruments	• Sodium hypochlorite common equipment o 07-PA-700A/B, high feed pressure alarm o 07-SI-700A/B, feed pump speed o 07-YC-700A/B, feed pump VFD status o 07-LIC-TK700, brine tank level o AAH-701, high hydrogen alarm • Sodium hypochlorite generator 1 o ZI-701, brine tank fill valve status o ZI-704, brine solution inlet valve status o SI-701, brine feed pump speed o YI-701, brine feed pump status o ZI-702, brine system valve solenoid status o ZI-703, brine system valve solenoid status o FI-701, brine inlet flow o TI-701, brine inlet temperature o LAL-EC701, cell low level alarm o TAL-EC701, cell low temperature alarm o II-705, transformer current indicator o YI-750, generator status o FAL-TK701, low vent flow o LIC-TK701, sodium hypochlorite tank level o LAHH-TK701, sodium hypochlorite tank high high level o LALL-TK701, sodium hypochlorite tank low low level o YI-710, tank vent blower run status o ZC-TK701, dosing pump suction valve position	~ psi ~ ppm ~ inH2O ~ °F ~ acfm 90% 10%

Instruments (cont.)	• Sodium hypochlorite generator 2 o ZI-706, brine tank fill valve status o ZI-709, brine solution inlet valve status o SI-702, brine feed pump speed o YI-702, brine feed pump status o ZI-707, brine system valve solenoid status o ZI-708, brine system valve solenoid status o FI-704, brine inlet flow o TI-704, brine inlet temperature o LAL-EC702, cell low level alarm o TAL-EC702, cell low temperature alarm o II-760, transformer current indicator o YI-760, generator status o FAL-TK702, low vent flow o LIC-TK702, sodium hypochlorite tank level o LAHH-TK702, sodium hypochlorite tank high high level o LALL-TK702, sodium hypochlorite tank low low level o YI-720, tank vent blower run status o ZC-TK702, dosing pump suction valve position • Sodium hypochlorite pumping o SIC-703A/B/C, hypo pump A/B/C speed o PAH-706, hypo high discharge pressure alarm from either PSH-706A/B • Caustic storage and injection equipment o LIT-501, active caustic tote level o LAL-501, active caustic tote low level alarm o SIC-501A/B/C, caustic pump A/B/C speed o PAH-501, caustic high discharge pressure alarm from either PSH-501A/B • Coagulant storage and injection equipment o LIT-502, active coagulant tote level o LAL-502, active coagulant tote low level alarm o SIC-502A/B, coagulant pump A/B speed o PAH-502, coagulant high discharge pressure alarm • Orthophosphate storage and injection equipment o LIT-504, active ortho tote level o LAL-504, active ortho tote low level alarm o SIC-503A/B, ortho pump A/B speed o PAH-503, ortho high discharge pressure alarm	~ inH2O ~ °F ~ acfm 90% `0% 50 psig 6 inH2O 50 psig 6 inH2O 50 psig 6 inH2O 50 psig

Equipment	• Sodium hypochlorite common equipment
	  o 07-VFD-700A/B, water booster pump motor speed controller
	• Sodium hypochlorite generator 1 (vendor package)
	• Sodium hypochlorite generator 2 (vendor package)
	• Sodium hypochlorite storage and pumping
	  o TK-701, hypo storage tank 1
	  o TK-702, hypo storage tank 1
	  o P-703A/B/C, hypo feed pumps
	• Caustic storage and pumping
	  o TK-501, caustic totes
	  o P-501A/B/C, caustic feed pumps
	  o VFD-501A/B/C, caustic feed pump motor speed controller
	• Coagulant storage and pumping
	  o TK-502, coagulant totes
	  o P-502A/B, coagulant feed pumps
	  o VFD-502A/B, coagulant feed pump motor speed controller
	• Orthophosphate storage and injection equipment
	  o TK-503, ortho totes
	  o P503A/B, ortho feed pumps
	  o VFD-503A/B, ortho feed pump motor speed controller	

Programming Interlocks	• High discharge pressure at PSH-501A/B stops all caustic dosing pumps P-501A/B/C and raises a critical alarm (PI-23) • High discharge pressure at PSH-502 stops both coagulant dosing pumps P-502A/B and raises a critical alarm (PI-24) • High discharge pressure at PSH-503 stops both ortho dosing pumps P-503A/B and raises a critical alarm (PI-25) • High discharge pressure at PSH-706A/B stops all hypo dosing pumps P-703A/B/C and raises a critical alarm (PI-31)	
SCADA Functionality	• All data collection and systems controls for the chemical systems are included in SCADA. • Data and reporting from the sodium hypochlorite generator skids will be via coms.	
PLC Functionality	• Control of the hypochlorite pumps is via PLC with the pump suction valves alternating based on tank levels in the Solution Hypochlorite Storage Tanks (T-701/702). One tank will supply all pumps until it is down to 20% level (operator adjustable set-point), then the source will switch to the other tank using valves SV-TK701/702.	

C. Control Narrative 2: Dissolved Air Flotation (DAF) and Mixed Media Gravity Filtration

Overview	This system is comprised of a two-stage rapid mix chamber, followed by three parallel flocculation and DAF clarifier trains, followed by two parallel gravity filter trains consisting of three filters per train. • Each DAF train is comprised of a recycle/saturator system including recycle pump and saturator vessel. • Each of the six filters have independent pipes for effluent, rinse and backwash operations. • All instrumentation and equipment connect to local control panels (one common panel for DAFs and one panel per filter train). DAF control panel includes PLC and touchscreen HMI.	Setpoints
Instruments	Rapid Mixer • 01-FIT-013 raw water flow • 01-LIT-020 mix chamber level transmitter Water quality analyzers • alkalinity: raw water, post-filter • TOC: raw water, post-DAF, post-filter • pH: raw water and post-DAF, post-filter, post-chemical injection • turbidity: raw water, post-DAF and post-filter • free chlorine: post-chemical injection Common • FIT-440 effluent mag meter to contact basins. • LIT-410/420 contact basin level transmitters. • LIT-430 clearwell level transmitter. DAF-1/2/3 • effluent chamber level transmitters • recycle pump suction and discharge pressure gauge/transmitters. • recycle pump flow meters. Filter-A/B • turbidimeter, per filter (six total) • level transmitters, per filter (six total)	

Equipment	Common • 02-LCP-001, Main DAF PLC Control Panel Rapid Mixer • 01-VFD-021, mixer 1 • 01-VFD-022, mixer 2 DAF-1/2/3 • 02-VFD-103, DAF-1 stage 1 flocculation mixer • 02-VFD-105, DAF-1 stage 2 flocculation mixer • 02-VFD-111, DAF-1 skimmer • 02-VFD-120, DAF-1 recycle pump • 02-VFD-203, DAF-2 stage 1 flocculation mixer • 02-VFD-205, DAF-2 stage 2 flocculation mixer • 02-VFD-211, DAF-2 skimmer • 02-VFD-220, DAF-2 recycle pump • 02-VFD-303, DAF-3 stage 1 flocculation mixer • 02-VFD-305, DAF-3 stage 2 flocculation mixer • 02-VFD-311, DAF-3 skimmer • 02-VFD-320, DAF-3 recycle pump	
Detail	See manufacturer's process control narrative (AWC drawing) 17805-PR-NAR-001.	
SCADA Functionality	• Monitor AWC-furnished (rapid mix, DAF, filter) operations. • Provide general enable command to DAF PLC.	

D. Control Narrative 3: Hach RTC-COAG Coagulation Process Control System

Overview	• Predeveloped coagulation process control software receives process condition and water quality data from raw and treated water and provides optimized coagulant dosing recommendations. • Provides operator interface to facilitate selection of control modes and setpoint adjustment. • Stores process data and generates trending reports as selected by the operator. • Provides coagulant concentration to the plant SCADA system.	
Instruments	• Signals input to RTC-COAG program include the following, at a minimum: - 01-AIT-001, raw water total organic carbon - 01-AIT-002A/B, raw water pH and temperature - 01-AIT-003, raw water alkalinity - 01-AIT-004, raw water turbidity - 01-FIT-013, raw water flowrate - 02-AIT-201, post-DAF turbidity - 02-AIT-202A/B, post-DAF pH and temperature	
Equipment	• Industrial computer with touchscreen HMI.	
SCADA Functionality	• Communicate Ethernet/IP to plant control panel (10-CP-01) for RTC-COAG program to exchange process data. • Store inputs and results for trending. • Adjust coagulant dosing parameters.	

E. Control Narrative 4: Chlorine Contact Basins

Overview	The chlorine contact basins (formerly slow sand filter bays) are provided to allow for both additional treated water storage and for contact time during periods of very high flows and low water temperatures. The chlorine contact basins are hydraulically linked to the clearwell level. The chlorine contact basins have four operating modes: 1 Bypass – both basins are bypassed and treated water flows directly to the clearwell through MV-436. 2 Single Bay North – flow enters basin 4 through MV-437, flows into basin 3, and then into the clearwell through MV-439. In this mode, valves MV-435/436/438 are closed. 3 Single Bay South – flow enters basin 1 through MV-435, flows into basin 2, and then into the clearwell through MV-438. In this mode, valves MV-436/437/439 are closed. 4 Both Bays – flow enters both bays through their respective inlet valves MV-435/437 and leave through outlet valves MV438/439. In this mode, valve MV-436 is closed.	
Instruments	• LIT-410, contact basin 1/2 level (TK-401A) • LIT-420, contact basin 3/4 level (TK-401B)	
Equipment	• TK-401A, South contact tank (basins 1 & 2) • TK-401B, North contact tank (basins 3 & 4)	
Programming Interlocks	• Flow at FIC-440 (treated water from new plant) must be less than 975 gpm to allow Bypass mode.	
SCADA Functionality	• All modes controlled from SCADA.	
PLC Functionality	• All I/O via PLC in 10-CP-03.	
Alarms	• LIT-410, contact basin 1/2 level (TK-401A) high level • LIT-410, contact basin 1/2 level (TK-401A) low level • LIT-420, contact basin 3/4 level (TK-401B) high level • LIT-420, contact basin 3/4 level (TK-401B) low level	6.5 ft 1 ft 6.5 ft 1 ft

F. Control Narrative 5: Clearwell

Overview	The clearwell provides suction volume for the high service pumps.	
Instruments	• LIT-430 Clearwell Tank Level	
Equipment	• TK-402, Clearwell (existing)	
Programming Interlocks	None	
SCADA Functionality	• Report tank level.	
PLC Functionality	• Report tank level	
Alarms	• Clearwell low level (LIT-430). • Clearwell high level (LIT-430).	4.5 ft 9.5 ft

G. Control Narrative 6: High-Service Pumps

Overview	The high-service pumps are comprised of three pumps with 40 Hp motors in the clearwell/pipe gallery building that pump treated water to the water storage tanks above the WTP. Motors to operate in Lead/Lag/Standby Configuration.	
Instruments	• LIT-430 Clearwell Tank Level • LT-1001 Storage Tank Level	
Equipment	• P-401A/B/C • VFD-401A/B/C	
Programming Interlocks	• LIT-430 Low Alarm not active.	
SCADA Functionality	• Provide Start Setpoint, LT-1001 • Provide Stop Setpoint, LT-1001 • Provide Lag-On Setpoint, LT-1001 • Provide Lag-Off Setpoint, LT-1001	50% 90% 45% 75%
PLC Functionality	• When LT-1001 Storage Tank Level falls below Start Setpoint, start lead VFD. • Ramp VFD to setpoint speed over 10 seconds. • Control VFD speed using PID Controller to maintain LIT-430 setpoint. • If LT-1001 falls below Lag-On Setpoint, start lag VFD and ramp to PID setpoint over a 10-second period. • When LT-1001 exceeds Lag-Off Setpoint, ramp VFD to stop over a 10-second period. • When LT-1001 exceeds Stop Setpoint, ramp VFD to stop over a 10-second period.	
Alarms	• Low LT-1001 Storage Tank Level. • Low-Low LT-1001 Storage Tank Level. • Lead-Pump Unavailable. • Lag-Pump Unavailable.	40% 35%

H. Control Narrative 7: Waste Handling

Overview	The waste handling system primarily consists of the Backwash EQ Basins (TK-601), the Backwash Mixing Pumps (P-601A/B), and the backwash outlet flow control valves (FV-603A/B). Backwash water, filter to waste water, and other waste streams that are permitted to flow to the wastewater treatment plant are routed to these basins.	Setpoints
Instruments	• LIT-601, Backwash EQ basin level • LSH-601, Backwash EQ basin high level switch • LSHH-601, Backwash EQ basin high-high level switch • FIT-603, backwash outlet flow rate	
Equipment	• TK-601, Backwash EQ Basin • P-601A/B, Backwash Mixing Pumps • VFD-601A/B, backahs mixing pump motor VFDs	

Programming Interlocks	• Backwash basin high-high level prevents any filter from entering backwash mode. • High level in sewer collection system lift stations Node 4 and/or Node 6 closes backwash EQ basin outlet flow control valves FV-603A/B. High level alarms from these two lift stations are sent over the SCADA system (tag numbers not known). *Note: main basin floor is 254.0', overflow is 260.0', sump floor is 251.5'. All set-points reference main basin floor.	5.5 ft*
SCADA Functionality	• All controls are via SCADA • The backwash outlet flow control valves FV-603A/B will empty the Backwash EQ basin at a maximum flow rate of 220 gpm. The valves should operate in a lead/lag fashion and should alternate lead positions after each empty cycle or once per day at a minimum.	
PLC Functionality	• All controls are via PLC in 10-CP-01	
Alarms	• LIT-601, Backwash EQ basin high level • LSH-601, Backwash EQ basin high level switch • LSHH-601, Backwash EQ basin high-high level switch • FIT-603, backwash outlet high flow rate	5.0 ft* 5.1 ft* 5.5 ft* 240 gpm

END OF SECTION

SECTION 40 62 00 – COMPUTER SYSTEM HARDWARE AND ANCILLARIES

PART 1 - GENERAL

1.1 SUMMARY

A. Section Includes:
   1. Computer hardware and software.
   2. Network rack hardware.

B. Related Sections:
   1. 40 63 43 – Programmable Logic Controllers.

1.2 SUBMITTALS

A. Equipment Submittals: Manufacturer's product literature for all hardware and software components, marked to show included products.

PART 2 – PRODUCTS

2.1 SERVERS

A. Provide Qty 1 server meeting the following minimum specifications:
   1. Operating System: Windows Server 2022, or Engineer approved equal.
   2. Installation Type: 19" Rackmount.
   3. Processor: Intel Xeon Silver 4310, minimum.
   4. Hard Drive: SSD SATA. 1TB minimum.
   5. RAID Configuration: RAID 1 or RAID 5.
   6. RAM: 32GB, minimum.
   7. User Cals: 5-Pack Window Server 2022 User Cals.

B. Server Software: Server shall have the following software installed:
   1. PLC programming software per 40 63 43, "Programmable Logic Controllers." Software shall be licensed under the Owner's name.
   2. SCADA software per 40 68 13, "Process Control Software."
   3. MariaDB Community Edition database.
   4. HeidiSQL database workbench.

2.2 DESKTOPS

A. Provide Qty 2 desktop PCs meeting the following minimum specifications:
   1. Operating System: Windows 11 Professional, or Engineer approved Equal.
   2. Hard Drive: 128GB SSD, minimum.
   3. RAM: 16GB, minimum.
   4. Processor: Intel i7, GHz, minimum.
   5. Ports: Qty 1 HDMI 2.1 and Qty 1 DisplayPort, minimum.

B. Provide Qty 2 desktop d displays meeting the following minimum specifications:
   1. Size: 24".
   2. Resolution: 1920x1080, minimum.
   3. Ports: Qty 1 HDMI 2.1 or Qty 1 DisplayPort, minimum.

2.3 NETWORK RACKS

A. Provide Qty 2 network racks meeting the following minimum specifications:
   1. Dimensions (HxWxD): 48"x28"x24".
   2. Rating: NEMA 4/12.

3. Manufacturer: Hoffman, or Engineer approved equal.
4. Part Number: PTHW482824G2, or Engineer approved equal.

PART 3 - EXECUTION

3.1 INSTALLATION

A. System integrator shall install and configure all software.

END OF SECTION

SECTION 40 63 43 – PROGRAMMABLE LOGIC CONTROLLERS

PART 1 - GENERAL

1.1 SUMMARY

A. Section Includes:
   1. Programmable logic controllers and accessories.

1.2 REFERENCES

A. National Electrical Manufacturing Association (NEMA):
   1. NEMA IA 2.2 - Programmable Controllers - Equipment Requirements and Tests.
   2. NEMA IA 2.3 - Programmable Controllers - Programming Languages.

1.3 SUBMITTALS

A. Section 01 33 00 – Shop Drawing Submittals: Submittal Procedures.

B. Product Data: Submit catalog data for each component specified showing electrical characteristics and connection requirements.

C. Shop Drawings: Indicate electrical characteristics and connection requirements, including layout of completed assemblies, interconnecting cabling, dimensions, weights, and external power requirements.

D. Project Record Documents: Record actual locations of controller cabinets and input and output devices connected to system. Include interconnection wiring and cabling information, and terminal block layouts in controller cabinets.

PART 2 – PRODUCTS

2.1 PROGRAMMABLE CONTROLLER

A. Manufacturers:
   1. Allen Bradley, 1769-L33ER.
   2. Substitutions: Engineer approved equal.

B. PLC Power Supply Voltage: 24 VDC.

C. I/O Modules: 1794 Flex I/O, or Engineer approved equal.

D. Spare Hardware: Contractor shall provide one spare processor, one spare power supply, and one spare I/O card for each type of I/O card provided.

E. Firmware: PLC firmware shall be latest stable version offered by manufacturer.

PART 3 - EXECUTION

3.1 PROGRAMMING

A. Ground and bond programmable controllers according to Section 26 05 26, “Grounding and Bonding.”

B. Wire all field I/O to PLC system.

3.2 FIELD QUALITY CONTROL

A. Perform functional testing to verify proper I/O wiring and operations.

END OF SECTION

SECTION 40 67 00 – CONTROL SYSTEM EQUIPMENT PANELS AND RACKS

PART 1 - GENERAL

1.1 SUMMARY

A. Section Includes:
   1. Requirements for control panels, cabinets, instrument junction boxes, control, and communication equipment.
   2. Power supply and power conditions requirements.

1.2 CONTROL PANELS

A. Scope: Provide control panels as indicated on the P&IDs, electrical drawings and as specified in this Section.

B. Control power separation: Separate control and instrument devices from power wiring. Panels containing voltages greater than 480 VAC shall be separated from the control section by physical barriers.

C. Control power voltage: All control power voltage shall be 24 VDC, unless different voltage is required for the application.

D. Uninterruptable power supplies (UPS): Control panel UPSs shall be DIN-rail mounted 24VDC power supplies.

E. Labels: Control panels enclosures shall be labeled using engraved phenolic labels, placed on the enclosure door identifying the panel.

1.3 SUBMITTALS

A. Equipment Submittals: Panel Builder shall provide equipment submittals, including shop drawings, a bill of materials and manufacturer's literature, highlighted to show included products.

B. Closeout Submittals: Systems Integrator shall submit a final set of shop drawings incorporating all red lines as part of a final O&M submittal.

1.4 QUALITY ASSURANCE

A. UL Listing: Control panels shall be fabricated by a UL 508A recognized facility and shall bear the appropriate UL 508A Industrial Control Panel label.

B. NEC: Panels shall be labeled in accordance with Article 409 of the National Electric Code.

C. Testing: Panel Builder shall perform, at a minimum, the following tests prior to shipping:
   1. Verify all circuit breaker functionality.
   2. Verify power supply and UPS functionality.
   3. Verify PLC and remote I/O adapter functionality, including network communication.
   4. Verify PC functionality, as applicable, including network communication.

1.5 WARRANTY

A. Manufacturer's Warranty: For a period of one year after substantial completion and at no cost to the Owner, the control panel manufacturer shall (1) repair or replace any defective components and (2) remedy any deficiency related to workmanship at no cost to the Owner.

PART 2 – PRODUCTS

2.1 CONTROL PANELS

A. Manufacturer: Panel Builder.

B. Enclosure:

1. Manufacturers:

a. Hoffman.

b. Substitutions: Engineer approved equal.

2. NEMA Rating: Enclosure NEMA rating shall be 4/12, unless otherwise noted in the Drawings.

C. Light: Control panel shall include an LED light, affixed to the top interior of the control panel and capable of accepting 24 VDC.

PART 3 - EXECUTION

3.1 INSTALLATION

A. Ground and bond programmable controllers according to Section 26 05 26, "Grounding and Bonding."

B. Wire all field I/O to PLC system.

C. Panel manufacturing to be performed in a workmanlike manner.

1. Wire gutter shall be sufficiently wide that no more than 1/3 of the gutter is filled with wire.
2. Panel labels shall be neatly affixed to the enclosure, square to the enclosure or control panel.

3.2 FIELD QUALITY CONTROL

A. Perform functional testing to verify proper I/O wiring and operations.

END OF SECTION

SECTION 40 68 13 – PROCESS CONTROL SOFTWARE

PART 1 - GENERAL

1.1 THE REQUIREMENT

A. The Systems Integrator shall provide all PCIS programming and software, complete and operable, in accordance with the Contract Documents.

B. The requirements of this Section apply to all components of the PCIS, unless indicated otherwise.

C. Responsibilities:
1. The Systems Integrator shall design, code and test the Process Sequences specified for the PCIS.
2. As a minimum, the Systems Integrator shall perform the following work:
a. Implementation of the PCIS
1) Prepare program and documentation submittals.
2) Prepare the test and training plan.
3) Procure software.
4) Generate, test and verify PLC code.
5) Create HMI graphics screens.
6) Prepare software documentation for insertion into O&Ms.

b. Install programming in the PLC(s) and verify proper operation.

3. Any programming responsibilities in addition to the list above are the responsibility of the Contractor to prepare a complete and operational system.

1.2 SUBMITTALS

A. Equipment Submittals:
1. Software:
a. Submit a list of all programming and accessory software used for programming the PLC and HMI or needed for communication or HMI production.
b. Provide version numbers for all submitted software.

2. Licenses and Security Keys and Proprietary Programming
a. Upon completion and acceptance of the programming, the transfer of all licensing and security keys to the Owner shall be provided.
b. Programming will be provided with documentation, and upon acceptance will become the property of the Owner.

B. Closeout Submittals:
1. O&M Manual: Include the following SCADA system info into O&M manual: Include screen shots of each screen and a description of screen functionality.
a. Login / Security functionality.
1) Do not include usernames or passwords in the O&M manual.
b. Screenshot of all individual screens along with functionality.
1) Function descriptions shall include a description of all system setpoints.

PART 2 – PRODUCTS

2.1 SOFTWARE

A. PLC Software – Systems integrator shall provide one perpetual license meeting the following specifications to be transferred to owner at project completion:
   1. Manufacturer: Allen Bradley, or Engineer approved equal.
      a. Firmware shall match PLC firmware.
   2. Software: Studio 5000 V32 or higher.
   3. Communications: RSLinx Classic.

B. Plant SCADA Software (Not DAF Plant Manufacturer HMI Software) – Systems integrator shall provide one SCADA license meeting the following specifications:
   1. Manufacturer: Inductive Automation.
   2. Software: Ignition 8.1 or later.
   3. Module Requirements:
      a. Unlimited Vision Clients.
      b. SQL Bridge.
      c. Allen Bradley and Modbus TCP drivers.

PART 3 - EXECUTION

3.1 Required for Completion:

A. Engineer must approve of SCADA O&M before this Section is deemed complete.

END OF SECTION

SECTION 40 70 00 – INSTRUMENTATION FOR PROCESS SYSTEMS

PART 1 GENERAL

1.01 SECTION INCLUDES

A. Impulse, instrument air supply, control, and signal piping including tubing, fittings, valves, and support materials.

B. Sun protection and heated instrument enclosures.

C. Instrumentation, control and communication cable and raceway.

D. Instrument mounting stands.

E. Instruments and control equipment:
   1. Pressure sensing devices.
   2. Flow sensing devices.
   3. Temperature sensing devices.
   4. Level sensing devices.
   5. Water quality analytical devices.
   6. Water quality analytical industrial computer system.
   7. Control valves.
   8. Actuated block valves.
   9. Safety relief valves.

F. Installation of instrumentation and control equipment including field transmitters, sensing elements, control valves, analyzers, and miscellaneous devices.

1.02 RELATED REQUIREMENTS

A. Section 26 00 00 – Electrical Work, General.

B. Section 40 70 00-13 – Instrument Index.

1.03 INFORMATIONAL SUBMITTALS

A. Submit with Bid: Preliminary instrument listing including instrument tag number, manufacturer, and model number.

B. Submitted information relating to instrumentation and control devices shall be referenced by unique instrument tag numbers.

C. Submittals provided without following information will be marked “returned without review” as defined in submittal section. Submittals shall clearly identify:
   1. Each item by instrument tag number as defined in Section 40 70 00-13 and on P&IDs.
   2. Complete part or catalog number including material selections, design parameters, equipment catalog designations, calibration range, device options and accessories to be provided.

D. Product Data: Spare parts lists including maintenance, special tools, test equipment, and name with address of manufacturer’s local supplier for spare parts.

1.04 ACTION SUBMITTALS

A. Product Data:
   1. Manufacturer's data or specification sheets for instrumentation and control devices showing design parameters, equipment catalog designations, calibration range, and clearly identifying options provided.
   2. Instrument listing: Listing shall be oriented by instrument tag number and include manufacturer, model number, calibrated range, setpoint values, and associated devices.
   3. Certified calculation sheets:
      a. Flow meter sizing.
      b. Thermowell stress analysis and frequency analysis.
      c. Control valve sizing and aerodynamic noise predictions.
      d. Pressure relieving device sizing.

B. Shop Drawings:
   1. Certified outline drawings.
   2. Installation drawings including mounting, grounding, and process connection requirements.
   3. Wiring interconnection drawings for equipment and accessories provided. Wiring interconnection drawings shall define terminal numbers and functions for interface with other instruments and equipment.

1.05 CLOSEOUT SUBMITTALS

A. Operation and maintenance manuals:
   1. Complete instruction manuals and parts lists covering installation, operation, wiring and process interconnections, and maintenance of equipment.
   2. Control loop diagrams for instrument and control devices connected to control system enclosures. Diagrams shall be in accordance with minimum requirements of ANSI/ISA S5.4. Control loop diagrams shall also include manufacturer, model number, and calibrated range; setpoint values for alarm and shutdown devices; equipment numbers for racks, panels, and junction boxes; and fail position. Assign tag number oriented cable and wire numbers.
   3. Schematic and wiring interconnection drawings for instruments wired to facility control panels. Show color of wire, all termination points, terminal numbers, cable and wire numbers. Assign cable and wire numbers for external panel wiring. Cable and wire numbers shall be tag number oriented.

B. Record Documents: "As-built" control loop diagrams, schematic and wiring drawings as defined above.

1.06 QUALITY ASSURANCE

A. Instruments, control devices, accessories and materials provided shall be designed and constructed to be compliant with current edition of all industry standards. This includes but is not limited to ISA, ASME, NEC, NFPA, API and all requirements of project area's Authority Having Jurisdiction (AHJ).

B. Provide instruments from same manufacturer and of same model series when multiple units of same item are required.

C. Instruments, control devices, and accessories shall be free of mercury and asbestos.

D. Instruments, control devices and accessories associated with potable water shall satisfy requirements of NSF 61 and NSF 372.

E. Use plant instrument air source pressure or furnish pressure regulator with filter and output gauge.

F. Furnish insect-proof screens on vents.

G. Furnish new and unused instruments and control devices.

1.07 DELIVERY, STORAGE, AND HANDLING

A. All instrumentation and control components shall be maintained in a conditioned space, including while being stored, and storage and handling must be performed as recommended by manufacturer.

PART 2 PRODUCTS

2.01 DESIGN REQUIREMENTS

A. Instrumentation, tubing, fittings, manifolds, and valves shall comply with Process Piping Code ASME B31.3.

B. Flow meters: Submit certified calculation sheets verifying meter selection for operating conditions at minimum and maximum flow rate. Submit factory calibration certification sheets with the instrument.

C. Control valves:
   1. Furnish control valves and accessories as complete assembly with controller, control tubing and as applicable, motorized actuator as applicable, and interconnection wiring.
   2. Verify control valve sizing in accordance with ISA75, as follows:
      a. Minimum flow: Greater than 10% valve travel.
      b. Normal flow: Approximately 50% to 70% valve travel.
      c. Maximum flow: Approximately 90% valve travel.
   3. Verify predicted sound pressure level using ISA75.
      a. Control valve body outlet velocity shall not exceed mach 0.3.
      b. Predicted sound pressure shall not exceed 85 dB unless noted otherwise.
      c. Provide recommendations for mitigation of problem.

2.02 IMPULSE TUBING

A. Tubing:
   1. As defined on Instrument Installation Detail Drawing.
   2. Process: Water/air/steam/gas below 1,500 psig and 1,000°F.
      a. Outside diameter: 0.5” (14 mm).
      b. Wall thickness: 0.035” (1.5 mm).
      c. Material: ASTM A269, Type 316 stainless steel.
      d. Construction: Seamless.

B. Fittings: Type 316 stainless steel compression fittings.

C. Manufacturer: Swagelok, Parker, or equal.

2.03 INSTRUMENT VALVES

A. Low-pressure water, below 300 psig and 500°F service:
   1. Type: Ball.
   2. Material: Type 316 stainless steel, ASTM A479.
   3. Pressure rating: 1,500 psig at 100°F.
   4. Internals: Type 316 stainless steel ball, teflon packing.

B. Manufacturer: Swagelok, Parker, or equal.

2.04 INSTRUMENT MANIFOLDS

A. Type: 2-valve for pressure applications and 3-valve for differential pressure applications.

B. Pressure class: ASME/ANSI B16.34 Class 2500.

C. Material: ASTM A479 Type 316 stainless steel.

D. Internals: Carbide ball seat and graphoil or Teflon packing.

E. Manufacturer: Anderson Greenwood Co., PGI International, or equal.

2.05 CONTROL AND INSTRUMENT AIR SUPPLY TUBING

A. Tubing: As defined on Instrument Installation Detail Drawing.
   1. Application:
      a. One line for 1 to 4 devices (not including pneumatic actuators).
      b. One line to single pneumatic actuator.
   2. Features:
      a. Outside diameter: 3/8" (10 mm).
      b. Wall thickness: 0.035" (1.0 mm).
      c. Material: ASTM A269, or equal; Type 316 stainless steel.
      d. Construction: Seamless.

B. Fittings: Compression, Type 316 stainless steel.

C. Flexible tubing:
   1. Use: Provide for applications between terminal instrument/control valve/controller and air supply tubing. Flexible tubing length shall not exceed 3' (1 m).
   2. Construction: General purpose synthetic rubber tube, one textile braid reinforcement, with MSHA accepted synthetic rubber cover.
   3. Size (I.D., in., mm): As required for application.
   4. Color: Blue.
   5. Fitting style: Barbed, as required for application.

D. Manufacturer: Swagelok, Parker, or equal.

2.06 SUN PROTECTION CANOPY OR ENCLOSURE

A. Application: Instrumentation mounted outdoor in direct sunlight or where susceptible to temperatures exceeding manufacturer's ambient upper temperature range.

B. Construction: Molded polyurethane, stainless steel, or other chemical and ultraviolet light-resistant material.

C. Canopy or enclosure shall fully protect instrument from exposure to direct sunlight.

D. Mount directly to instrument, instrument mounting bracket, or other suitable support.

E. Manufacturer and model: O'Brien/Ametek, Vipak, or equal.

2.07 HEATED INSTRUMENT ENCLOSURE

A. Application: Instrumentation mounted outdoor where susceptible to temperatures exceeding manufacturer's ambient lower temperature range.

B. Construction: Molded polyurethane or other chemical, ultraviolet light- and fire-resistant material.

C. Enclosure shall fully enclose instrument and manifold.

D. Enclosure shall provide integral 120-volt electric heater with internal thermostat.

E. Mount on same mounting bracket as instrument.

F. Manufacturer: Intertec, O'Brien, or equal.

2.08 ELECTRICAL MATERIALS

A. Rigid steel conduit:
   1. Material: Zinc-galvanized mild steel with smooth interior surface (conduit, fittings and mounting hardware).
   2. Couplings, unions, fittings, and conduit bodies: Threaded type.

B. Flexible liquidtight conduit:
   1. Use for short lengths up to 4' (1,219 mm), between rigid conduit or junction box and instrument.
   2. Material: Galvanized mild steel strip shaped into interlocking convolutions, with smooth interior surface and outer, waterproof extruded polyvinyl jacket.
   3. Fittings: Compression type with tapered hub and synthetic rubber gasket.

C. Wire and Cable:
   1. Analog signal cable:
      a. Configuration: Twisted pair, shielded, and jacketed.
      b. Insulation: 600-volt, 80ºC, PVC, color-coded to permit identification of each conductor.
      c. Conductors: Stranded copper, 16 AWG.
      d. Shield: Metallized foil or tinned copper braid providing 100% coverage against noise together with 18 AWG stranded tinned copper drain wire.
   2. RTD extension wire:
      a. 3-wire system:
         1) Configuration: Twisted triad, shielded, and jacketed.

2) Insulation: 600-volt, 90ºC, PVC, color-coded to permit identification of each conductor.
3) Conductors: Stranded copper, 16 AWG.
4) Shield: Metallized foil or tinned copper braid providing 100% coverage against noise together with 18 AWG stranded tinned copper drain wire.

3. Discrete signal cable:
   a. Insulation: 600-volt, 90ºF, PVC.
   b. Conductors: 16 AWG, stranded copper.
4. Power wire:
   a. Insulation: 600-volt, 90ºF.
   b. Conductors: 12 AWG, stranded copper.
5. Communication cable: Category 6.
   a. Conductor: Solid, bare copper minimum No. 23 AWG.
   b. Insulation: Fluorinated ethylene propylene (FEP) insulated singles.
   c. Insulated conductors: Unshielded, twisted 4 pairs enclosed with a spline fluorinated ethylene propylene filler material.
   d. Cable assembly shall be covered with clear "Flamearrest" jacket, sequentially marked at 2' (600 mm) intervals.
   e. Each communication cable shall be identified by means of surface ink printing indicating manufacturer, model, or catalog number. Cable shall meet TIA/EIA-568-D CAT6.
   f. Cables shall be capable of passing UL flame test Type CMP.

D. Wire and cable tags:
   1. Type: Embossed, heat-shrink tubing.
   2. Color: White.

2.09 INSTRUMENTS AND CONTROL DEVICES

A. Refer to Section 40 70 00-13 Instrument Index for device listing and instrumentation details.
   1. Information including but not limited to range and calibration data, sizes, special features, and process conditions (fluid and fluid state, pressure, temperature, and flow rates).
   2. Instrument and control devices shall be rated according to applicable design temperature, pressure, chemical concentration, and corrosiveness of process fluid/material and ambient area.

B. Pressure transmitters:
   1. Type: Absolute, differential, and/or gauge.
   2. Output: 2-wire, 4 – 20 mA with digital signal based on HART protocol.
   3. Process flange type: Coplanar.
   4. Materials of construction: Type 316 stainless steel flange and drain/vent.
   5. Isolating diaphragm: Type 316L stainless steel.
   6. O-ring: Glass-filled PFTE.
   7. Fill fluid: Silicone.
   8. Housing material: Polyurethane-covered aluminum.
   9. Approvals: NSF 61 certification for potable water.
   10. Display interface: LCD.
   11. Calibration certificate: 5-point factory calibration if available, otherwise 3-point factory calibration.
   12. Bracket for 2" (50 mm) pipe stand.
   13. Stainless steel tag.

14. Manufacturer: WIKA A-10, E&H Cerabar M PMP51, or ABB 266HSH.P series, or equal.

C. Pressure switches:
   1. Type: Pressure and/or Differential pressure.
   2. Features dfas specified in Section 40 70 00-13.
   3. Enclosure: NEMA 4X.
   4. Element: Hermetically sealed, general purpose.
   5. Contacts: SPDT, rated at 11 amperes at 125/250 volts ac and 5 amperes at 30 volts dc.
   6. Actuator seal: Buna N.
   7. Pressure range and setpoint: See Section 40 70 00-13.
   8. Factory calibrated setpoint.
   9. Stainless steel tag.
   10. Manufacturer: Ashcroft, or equal.

D. Pressure gages:
   1. Type: Direct reading.
   2. Range as specified in Section 40 70 00-13.
   3. Mounting: Local.
   4. Dial: 4-1/2" (114 mm).
   5. Color: Black on white.
   6. Case: Phenol or stainless steel.
   7. Ring: Screwed.
   8. Blowout protection: Pressure relieving back.
   9. Lens: Glass.
   10. Nominal accuracy: ±0.5%.
   11. Materials:
      a. Pressure element: Bourdon tube.
      b. Element material: Type 316 stainless steel.
      c. Socket material: Type 316 stainless steel.
   12. Connection: 1/2" (13 mm) NPT lower.
   13. Movement: Standard.
   14. NSF 61 certified. Provide assembled to NSF 61 diaphragm seal as needed for certification.
   15. Stainless steel tag.
   16. Manufacturer: Wika, Ashcroft, or equal.

E. Flow measurement – electromagnetic:
   1. Features and size as specified in Section 40 70 00-13.
   2. Sensor Type: Electromagnetic flow tube.
   3. Process connection: CL150 flanged.
   4. Electrodes: Stainless steel, low profile.
   5. Accuracy: +/- 0.2% of flow rate, maximum.
   6. Range: 1 to 30 feet per second.
   7. Calibration range as specified in Section 40 70 00-13.
   8. Enclosure: NEMA 4.
   9. Grounding rings, stainless steel, quantity two.
   10. Integral mount transmitter.
   11. Electronics Type: Integral transmitter with field wiring terminal blocks.
      a. Power supply: 120-volt ac / 24-volt dc.
      b. Output: 2-wire, 4 – 20 mA with digital signal based on HART protocol.

c. Enclosure: NEMA 4.
d. LCD display.

12. Manufacturer: Endress+Hauser Promag W400 series.

F. Flow measurement – differential pressure:
1. Type: Orifice.
2. Plate edge thickness: Bore and bevel.
3. Features specified on Section 40 70 00-13:
a. Size.
b. Type.
c. Process end connections.
d. Plate thickness.
e. Materials of construction.
f. Bore diameter.
g. Beta ratio.
h. Accessory components: provide with temperature transmitter for temperature compensation.

4. Provide paddle type handle with following stamped on handle:
a. Tag number.
b. Line size.
c. Flange rating.
d. Orifice bore.
e. Plate material.
5. Manufacturer: Rosemount Model 3051 differential pressure transmitter with 1495 orifice plate, or equal.
6. Size differential pressure flow elements for approximately 100 inwc local pressure drop, unless noted otherwise.

G. Temperature gages with thermowells:
1. Gages:
a. Type: Bimetal, adjustable head.
b. Mounting: Adjustable angle (local).
c. Dial: 3" (76 mm).
d. Color: Black on white.
e. Case and stem material: Stainless steel.
f. Nominal accuracy: ±1%.
g. Stem connection: 1/2" (13 mm) NPT union.
h. Stem diameter: 1/4" (6 mm).
i. Options: Stainless steel tag.
j. Range: As indicated on Section 40 70 00-13.
2. Thermowells:
a. Features specified on Section 40 70 00-13:
1) Material of construction.
2) Process connection.
3) Insertion length "U".
4) Lagging extension "T".
5) Shank style.
b. Bore: 0.260" (6.604 mm).
c. Internal thread: 1/2" (13 mm) NPT.
3. Manufacturer: Ashcroft EI or EL Series, Ametek/U.S ADJ Series, or equal.

H. Level measurement – non-contact, continuous:
   1. Type and features as specified in Section 40 70 00-13.
   2. All exposed materials must be suitable for the process fluid or material being measured.

I. Level measurement – pressure, continuous:
   1. Features as specified in Section 40 70 00-13.

J. Level switches:
   1. Features as specified in Section 40 70 00-13.
   2. Type and features as specified in Section 40 70 00-13.
   3. Enclosure: NEMA 4X.
   4. Element: Sealed, general purpose.
   5. Contacts: SPDT, rated at 11 amperes at 125/250 volts ac and 5 amperes at 30 volts dc.
   6. Stainless steel tag.
   7. Manufacturer: Flygt ENM-10, or equal.

K. Water quality analysis – instrumentation:
   1. Type and features specified in Section 40 70 00-13.
   2. Hach Claros enabled devices, where available.
   3. Manufacturer: Hach.
   4. Provide water quality analysis instruments and transmitters as specified in Section 40 70 00-13 (Instrument Index). Provide Hach Claros enabled instruments and transmitters, where available.
   5. Install water quality analysis sensors, components and transmitters on Instrument Panels as shown on Mechanical detail drawings.

L. Water quality analysis – industrial computer:
   1. Design basis: Hach RTC-COAG Module. Claros Enabled. Service Protected.
   2. Provide industrial panel computer with software suite installed and configured for the field instrument inputs provided.
   3. Industrial panel computer with minimum requirements:
      a. Processor: Atom Dual Core.
      b. Flash memory: 64 GB compact flash card.
      c. Internal working memory: 2 GB DDR-RAM minimum.
      d. Interface: RJ-45, minimum 10/100 MB/s.
      e. Diagnostic LEDs: Power, LAN speed, LAN activity, TC status, flash access.
      f. Internal clock: Battery-buffered clock for time and date (battery must be replaceable).
      g. Operating system: Microsoft Windows 10.
      h. Power supply: 24VDC.
      i. 15” Touch Panel.
   4. Software installed: RTC-COAG with User Interface, and Historian with Trending.
   5. VPN Modem: End-to-end encryption using SSL/TLS protocol. Ewon Flexy or equal.
   6. Device housings and enclosures installed in the DAF and Filter process room must be NEMA 4X type.

   7. Hach field commissioning service required:
      1) Configuration and programming in Hach’s CPM Configuration Center.
      2) Unlimited priority CPM Technical Support calls (6am to 6pm M-F Mountain Time, excluding holidays.)
      3) Onsite startup by Hach Field Service Technician, including:
      4) Certificate of Instrument Performance.

5) Onsite customer operator training.
6) 12 weeks of remote system monitoring and optimization by Hach CPM Technical Support personnel, including weekly and monthly system reports and setup of real-time system alerts..

2.10 INSTRUMENT IDENTIFICATION

A. Each instrument and control device shall have a tag permanently attached to case with following applicable information:
   1. Tag number.
   2. Manufacturer's name.
   3. Model number.
   4. Serial number.
   5. Operating range.
   6. Calibration setting/range.
   7. Power rating.

PART 3 EXECUTION

3.01 INSTALLATION - GENERAL

A. Install instrument and control devices in accordance with manufacturer's recommendations and shown on Drawings.

B. Locate instruments and control devices where shown on Drawings and/or designated by Owner's Representative.

C. Mount instruments so they are rigidly supported, level and plumb, and in such a manner as to provide accessibility; protection from damage; isolation from heat, shock and vibration; and freedom from interference with other equipment, piping, and electrical work.

D. Do not install instruments until heavy construction work adjacent to instruments has been completed to extent that damage will be unlikely to installation by such construction work.

E. Manufacturer's recommendations referred to herein shall be as stated in manufacturer's installation manual and/or by manufacturer's service representative. Final interpretation of "installation requirements" will be by Owner's Representative.

F. Perform welding in accordance with appropriate piping or structural welding specifications and procedures.

G. Follow manufactures recommendations for upstream and downstream straight pipe runs for flow meters. Contact Owner's representative if specified amount of straight pipe run not available.

H. Magnetic induction flow meters must be installed with two grounding rings, following manufacturer's instructions, for applications with any process pipe material, metallic or non-metallic. Provide jacketed ground conductor as needed for a complete installation free from ground loop interference or otherwise meter performance or signal interference. Site and buildings must be grounded as specified in Section 26 00 00 of this project manual.

I. See Instrument Index for additional requirements specific to individual instruments.

3.02 INSTRUMENT EQUIPMENT MOUNTING

A. Mount instrumentation equipment to building steel, concrete floors, or walls using pipe mounting stands or field-fabricated mounting brackets.
   1. Secure instrumentation equipment mounting bracket to building steel by welding or bolting, and to concrete or masonry building structure by expansion-type anchors. Do not mount instrumentation equipment to exterior removable panels.
   2. Grout mounting brackets on concrete floors with nonmetallic, chloride-free gypsum material, ASTM C1107, Grade A; formulation suitable for application.
   3. If vibration-free location is not available for instrument mounting, appropriate vibration shock mounting shall be provided by use of rubber grommets or other vibration dampeners designed for vibration absorption subject to Owner's review. Mounting of process pressure and temperature gages or process pressure and temperature switches to process piping shall be allowable only if vibration is minimized.
   4. Install instrumentation mounted outdoors within sun protection enclosures. Enclosure opening shall face north or east, insofar as practicable.
   5. Instrument equipment mounted outdoors in environments subject to freezing:
      a. Install in insulated/heated housings to maintain operational temperature limits.
      b. Install prefabricated, Preinsulated tubing bundle with electrical tracing or install heat trace and insulate tubing.

B. Instrument accessibility: Following general rules shall be adhered to, unless limited by other requirements in design of system.
   1. Locate instrument process connections for maximum convenience in operation and servicing of instrument. Orient connections so instruments or piping will not obstruct aisles, platforms, or ladders.
   2. Install field-mounted instruments so they are accessible from grade, platform, or permanent ladder. Instruments requiring adjustment or inspection shall be accessible for servicing from grade, walkway, platform, or permanent ladder.
   3. Locate remote instruments and control devices (devices not located in or on process lines) at nominal height of 4-1/2' (1.35 m) above finished floor, grade, or platform. Provide instrument racks for location in which 3 or more instruments or control devices are located within close proximity of each other.
   4. Control valves shall be accessible from grade or platforms. Use manufacturer's recommended clearance distances.
   5. Mount local indicators, recorders, and controllers so they are readable, controllable, and serviceable from grade or platforms.

3.03 TUBING INSTALLATION - GENERAL

A. Install instrument impulse piping parallel (except for slope) to building lines and other piping following instrument manufacturer's instructions.

B. Tubing shall be continuously supported with 12-gage aluminum angle and held in place with appropriate tubing clips and fasteners. Install tubing supports in such a manner to preclude fatigue failure of tubing due to vibration.

C. Only tool-made bends shall be acceptable.

D. Minimize number of unions used to join tubing lengths.

3.04 IMPULSE TUBING INSTALLATION

A. Instrument impulse piping work shall be from last block valve through, and including, blowdown piping to nearest equipment drain.

B. Install horizontal impulse piping with slope of 1" per foot (25 mm per 300 mm).
   1. Slope impulse piping toward instrument for liquid and steam service.
   2. Slope impulse piping away from instrument for gas service.

C. Blowdown and drain valves are required in impulse lines to all transmitters and instruments used on water, steam, and condensing vapor services.

D. Attach isolation valves to instruments so that it is possible to disconnect instrument from connecting pipe without having to drain pipe.

E. Install expansion loops in impulse piping installations where movement of last block valve and instrument is not in same plane or length of expansion varies.

F. Support pressure gages and other instruments connected to impulse piping independently of tubing. Provide ample expansion loops in tubing connections to instruments subject to vibrations to prevent failure due to metal fatigue.

G. Furnish and install accessories required for complete impulse piping system including instrument isolation valves, snubbers, siphons, and calibration and test connections at instrument.

3.05 CONTROL TUBING AND INSTRUMENT AIR SUPPLY TUBING INSTALLATION

A. Instrument tubing shall be routed an adequate distance from outside walls, doorways, and areas of extreme heat to minimize ambient effects on control lines.

B. Signal tubing termination at each instrument shall have gage tee with plug for calibration and service.

3.06 CLEANING

A. Before assembly or erection, thoroughly clean instruments of temporary protective coatings and foreign materials.

B. After erection of equipment, clean external surfaces of oil, grease, dirt, or other foreign material.

C. Blowout instrument air supply lines before final attachment to valve or instrument.

3.07 WIRE AND CABLE INSTALLATION

A. Maintain minimum of 1' (300 mm) separation between signals operating at voltages greater than 120-volts ac and instrumentation or communications signals. Group and route wire/cables as follows:
   1. Low-voltage/low current dc instrumentation signals (30-volts/50 mA or lower).
   2. High-voltage dc alarm signals (48-volts or greater).

3. Low-voltage ac control signals (120-volts or lower).
4. High-voltage ac power signals (greater than 120-volts).
5. Communications signals.

B. Install continuous wire from terminal-to-terminal. Splices not acceptable.

C. Shielded signal cable:
1. Connect shields to common ground at source of loop power.
2. Shields of multiple cable runs shall be connected on separate terminal blocks, but not grounded.
3. Cut and tape shield at destination end.

D. Identify both ends of wires, conductors, cables and conduit with permanent wire marker.

END OF SECTION

SECTION 40 70 00-13 - INSTRUMENT INDEX

PART 1 GENERAL

1.01 RELATED REQUIREMENTS

A. Division 40 specification sections.

PART 2 PRODUCTS

NOT USED

PART 3 EXECUTION

3.01 INSTRUMENT INDEX

A. Refer to attached instrument index for device listings and contractual responsibilities.

3.02 INSTRUMENT INDEX LAYOUT

A. Sort Order: Instrument Index is sorted by Instrument Category and then by Tag No.

B. Pressure:
   1. 010 – Pressure Transmitters
   2. 080 – Pressure Switches
   3. 090 – Pressure Gauges

C. Flow:
   1. 110 – Flowmeter (Differential Pressure)
   2. 160 – Magnetic Flowmeters

D. Level:
   1. 210 – Level (Pressure) Transmitters
   2. 220 – Radar Level Transmitters
   3. 280 – Level Switches

E. Temperature
   1. 390 – Temperature Gauges

F. Analyzers:
   1. 401 – pH Analyzers
   2. 430 – Chlorine Analyzers
   3. 440 – TOC Analyzers
   4. 450 – Turbidity Analyzers
   5. 452 – Alkalinity Analyzers

G. Tag No.: Unique alphanumeric identifier of device. Refer to General Legend and Notes drawing for Instrumentation Identifications.

H. Rev: Current revision of field device.
   1. Add: Device added to Contract in specified revision.
   2. Del: Device deleted from Contract in specified revision.

I. PID No.: Piping and Instrumentation Diagram on which device appears.

J. Tag Description: Description of device's service function.

K. Instrument Description 1: Specific instrument specifications and/or installation notes for device.

L. Manufacturer: Manufacturer/supplier of device.

M. Device: Instrument device type.

N. Model: Device model number.

O. Instrument Description 2: Additional instrument specifications.

P. Inst Range: Range that instrument can measure in engineering units.

Q. Calib Range: Calibration information for instrument in engineering units.

R. Supply: Contract supplying device.

S. Install: Contract installing device. Contractor if blank.

T. Spec No.: Specification reference includes additional technical requirements.

U. Plan: Plan drawing on which device appears.

V. Inst Dtl: Installation Detail for device.

W. Line: Line or vessel number associated with device.

X. Pipe Spec: Pipe specification associated with device.

Y. Line Code: Line code associated with device.

Z. Process Data: Process fluid and fluid state with engineering units. Minimum, normal, maximum, and design conditions. Flow rate, inlet pressure, outlet pressure, and temperature.

END OF SECTION

TAG NO. / REV / PID NO.	TAG DESCRIPTION / INST DESCR 1	MANUFACTURER / DEVICE / MODEL / INST DESCR2	INST RANGE / CALIB RANGE (SUPPLY / INSTALL)	SPEC NO. / PLAN / INST DTL	LINE / PIPESPEC / LINE CODE	ENG UNITS	FLUID MINIMUM	FLUID NORMAL	FLUID STATE MAXIMUM	FLUID STATE DESIGN
010 - PRESSURE TRANSMITTERS										
07-PIT-700A	POTABLE WATER BOOSTER PUMP A DISCHARGE	ENDRESS+HAUSER	0 TO 100 PSIG	40 70 00	3/4"-PVC80-PW-702A		POTABLE WATER		LIQUID	
0		PRESSURE TRANSMITTER	0 to 100 PSIG			GPM				
PI-26		CERABAR PMP51				PSIG	40	60	75	
	GAUGE PRESSURE TRANSMITTER, 316L WETTED MATERIALS, ALUMINUM HOUSING, 0.5" NPT 316L PROCESS CONNECT, 4-20mA HART OUTPUT, LCD DISPLAY, 5-POINT FACTORY CALIBRATION CERT, 316L MANIFOLD AND PIPE MOUNT BRACKET.	**MANUFACTURER TO COMPLETE MODEL NUMBER BASED ON CONDITIONS AND SPEC.				PSIG				
						DEGF	50	55	60	
07-PIT-700B	POTABLE WATER BOOSTER PUMP B DISCHARGE	ENDRESS+HAUSER	0 TO 100 PSIG	40 70 00	3/4"-PVC80-PW-702B		POTABLE WATER		LIQUID	
0		PRESSURE TRANSMITTER	0 to 100 PSIG			GPM				
PI-26		CERABAR PMP51				PSIG	40	60	75	
	GAUGE PRESSURE TRANSMITTER, 316L WETTED MATERIALS, ALUMINUM HOUSING, 0.5" NPT 316L PROCESS CONNECT, 4-20mA HART OUTPUT, LCD DISPLAY, 5-POINT FACTORY CALIBRATION CERT, 316L MANIFOLD AND PIPE MOUNT BRACKET.	**MANUFACTURER TO COMPLETE MODEL NUMBER BASED ON CONDITIONS AND SPEC.				PSIG				
						DEGF	50	55	60	
PIT-601	DAF SCOUR AIR BLOWER INLET PRESSURE	ENDRESS+HAUSER	15 PSIG	40 70 00	8"-SS150-BA-604		AIR		GAS	
0		PRESSURE TRANSMITTER	0 to 15 PSIG			SCFM	320	400	480	
PI-22		CERABAR PMP51				PSIG	6	8	10	
	GAUGE PRESSURE TRANSMITTER, 316L WETTED MATERIALS, ALUMINUM HOUSING, 0.5" NPT 316L PROCESS CONNECT, 4-20mA HART OUTPUT, LCD DISPLAY, 5-POINT FACTORY CALIBRATION CERT, 316L MANIFOLD AND PIPE MOUNT BRACKET.	**MANUFACTURER TO COMPLETE MODEL NUMBER BASED ON CONDITIONS AND SPEC.				PSIG		8		
						DEGF	50	60	159	
PIT-603	DAF SCOUR AIR BLOWER A OUTLET PRESSURE	ENDRESS+HAUSER	15 PSIG	40 70 00	8"-SS304-CA-601A		AIR		GAS	
0		PRESSURE TRANSMITTER	0 to 15 PSIG			SCFM	320	400	480	
PI-22		CERABAR PMP51				PSIG	6	8	10	
	GAUGE PRESSURE TRANSMITTER, 316L WETTED MATERIALS, ALUMINUM HOUSING, 0.5" NPT 316L PROCESS CONNECT, 4-20mA HART OUTPUT, LCD DISPLAY, 5-POINT FACTORY CALIBRATION CERT, 316L MANIFOLD AND PIPE MOUNT BRACKET.	**MANUFACTURER TO COMPLETE MODEL NUMBER BASED ON CONDITIONS AND SPEC.				PSIG		8		
						DEGF	50	60	159	
PIT-605	DAF SCOUR AIR BLOWER B OUTLET PRESSURE	ENDRESS+HAUSER	15 PSIG	40 70 00	8"-SS304-CA-601B		AIR		GAS	
0		PRESSURE TRANSMITTER	0 to 15 PSIG			SCFM	320	400	480	
PI-22		CERABAR PMP51				PSIG	6	8	10	
	GAUGE PRESSURE TRANSMITTER, 316L WETTED MATERIALS, ALUMINUM HOUSING, 0.5" NPT 316L PROCESS CONNECT, 4-20mA HART OUTPUT, LCD DISPLAY, 5-POINT FACTORY CALIBRATION CERT, 316L MANIFOLD AND PIPE MOUNT BRACKET.	**MANUFACTURER TO COMPLETE MODEL NUMBER BASED ON CONDITIONS AND SPEC.				PSIG		8		
						DEGF	50	60	159	

TAG NO.	TAG DESCRIPTION	MANUFACTURER	INST RANGE		SPEC NO.	LINE		FLUID		FLUID STATE	
REV		DEVICE	CALIB RANGE		PLAN	PIPESPEC		MINIMUM	NORMAL	MAXIMUM	DESIGN
PID NO.		MODEL	SUPPLY	INSTALL	INST DTL	LINE CODE	ENG UNITS	FLOW RATE			
	INST DESCR 1	INST DESCR2						INLET PRESSURE			
								OUTLET PRESSURE			
								TEMPERATURE			

080 - PRESSURE SWITCHES

PSH-604	DAF SCOUR AIR BLOWER A OUTLET PRESSURE	ASHCROFT	-15 TO 15 PSIG		40 70 00	8"-SS304-CA-601A		AIR		GAS	
0		LOW PRESSURE SWITCH	SET to 10 PSIG				SCFM	320	400	480	
PI-22		B4**					PSIG	6	8	10	
	GAUGE PRESSURE SWITCH, TEFLON ACTUATOR SEAL, ALUMINUM HOUSING, 0.5" NPT 316L PROCESS CONNECT, SPDT OUTPUT RATED 10A 120VAC/DC, FIELD ADJUSTABLE, PIPE MOUNT BRACKET, CHAINED COVER.	**MANUFACTURER TO COMPLETE MODEL NUMBER BASED ON CONDITIONS AND SPEC.					PSIG		8		
							DEGF	50	60	159	

PSH-606	DAF SCOUR AIR BLOWER B OUTLET PRESSURE	ASHCROFT	-15 TO 15 PSIG		40 70 00	8"-SS304-CA-601B		AIR		GAS	
0		LOW PRESSURE SWITCH	SET to 10 PSIG				SCFM	320	400	480	
PI-22		B4**					PSIG	6	8	10	
	GAUGE PRESSURE SWITCH, TEFLON ACTUATOR SEAL, ALUMINUM HOUSING, 0.5" NPT 316L PROCESS CONNECT, SPDT OUTPUT RATED 10A 120VAC/DC, FIELD ADJUSTABLE, PIPE MOUNT BRACKET, CHAINED COVER.	**MANUFACTURER TO COMPLETE MODEL NUMBER BASED ON CONDITIONS AND SPEC.					PSIG		8		
							DEGF	50	60	159	

PSL-602	DAF SCOUR AIR BLOWER INLET PRESSURE SWITCH	ASHCROFT	-15 TO 15 PSIG		40 70 00	8"-SS150-BA-604		AIR		GAS	
0		LOW PRESSURE SWITCH	SET to -4 PSIG				SCFM	320	400	480	
PI-22		B4**					PSIG	6	8	10	
	GAUGE PRESSURE SWITCH, TEFLON ACTUATOR SEAL, ALUMINUM HOUSING, 0.5" NPT 316L PROCESS CONNECT, SPDT OUTPUT RATED 10A 120VAC/DC, FIELD ADJUSTABLE, PIPE MOUNT BRACKET, CHAINED COVER.	**MANUFACTURER TO COMPLETE MODEL NUMBER BASED ON CONDITIONS AND SPEC.					PSIG		8		
							DEGF	50	60	159	

TAG NO.	TAG DESCRIPTION	MANUFACTURER	INST RANGE		SPEC NO.	LINE		FLUID		FLUID STATE	
REV		DEVICE	CALIB RANGE		PLAN	PIPESPEC		MINIMUM	NORMAL	MAXIMUM	DESIGN
PID NO.		MODEL	SUPPLY	INSTALL	INST DTL	LINE CODE		FLOW RATE			
	INST DESCR 1	INST DESCR2					ENG UNITS	INLET PRESSURE			
								OUTLET PRESSURE			
								TEMPERATURE			

090 - PRESSURE GAUGES

01-PI-111	RAW WATER PRESSURE	WIKA	0 TO 100 PSIG		40 70 00	14"-PVC80-RW-101		RAW WATER		LIQUID	
0		PRESSURE GAUGE	--- to --- ---				GPM				
PI-03		213.53DW**					PSIG		60		
	DIRECT READING, BOURDON TUBE, 2.5" DIAL, LOWER	**MANUFACTURER TO COMPLETE MODEL NUMBER BASED ON CONDITIONS					PSIG				
	SS 1/2" NPT PROCESS CONNECTION, NSF 61	AND SPEC.					DEGF		60		
	CERTIFIED WETTED COMPONENTS.										
07-PI-700A	POTABLE WATER BOOSTER PUMP A DISCHARGE	WIKA	0 TO 100 PSIG		40 70 00	3/4"-PVC80-PW-702A		POTABLE WATER		LIQUID	
0		PRESSURE GAUGE	--- to --- ---				GPM				
PI-26		213.53DW**					PSIG	40	60	75	
	DIRECT READING, BOURDON TUBE, 2.5" DIAL, LOWER	**MANUFACTURER TO COMPLETE MODEL NUMBER BASED ON CONDITIONS					PSIG				
	SS 1/2" NPT PROCESS CONNECTION, NSF 61	AND SPEC.					DEGF	50	55	60	
	CERTIFIED WETTED COMPONENTS.										
07-PI-700B	POTABLE WATER BOOSTER PUMP B DISCHARGE	WIKA	0 TO 100 PSIG		40 70 00	3/4"-PVC80-PW-702B		POTABLE WATER		LIQUID	
0		PRESSURE GAUGE	--- to --- ---				GPM				
PI-26		213.53DW**					PSIG	40	60	75	
	DIRECT READING, BOURDON TUBE, 2.5" DIAL, LOWER	**MANUFACTURER TO COMPLETE MODEL NUMBER BASED ON CONDITIONS					PSIG				
	SS 1/2" NPT PROCESS CONNECTION, NSF 61	AND SPEC.					DEGF	50	55	60	
	CERTIFIED WETTED COMPONENTS.										
PI-313	POTABLE WATER BACKWASH SUPPLY PRESSURE	WIKA	0 TO 100 PSIG		40 70 00	8"-PVC80-PW-303		POTABLE WATER		LIQUID	
0		PRESSURE GAUGE	--- to --- ---				GPM				
PI-12		213.53DW**					PSIG		60		
	DIRECT READING, BOURDON TUBE, 2.5" DIAL, LOWER	**MANUFACTURER TO COMPLETE MODEL NUMBER BASED ON CONDITIONS					PSIG				
	SS 1/2" NPT PROCESS CONNECTION, NSF 61	AND SPEC.					DEGF		60		
	CERTIFIED WETTED COMPONENTS.										
PI-314	POTABLE WATER BACKWASH SUPPLY PRESSURE	WIKA	0 TO 100 PSIG		40 70 00	8"-PVC80-PW-303		POTABLE WATER		LIQUID	
0		PRESSURE GAUGE	--- to --- ---				GPM				
PI-12		213.53DW**					PSIG		60		
	DIRECT READING, BOURDON TUBE, 2.5" DIAL, LOWER	**MANUFACTURER TO COMPLETE MODEL NUMBER BASED ON CONDITIONS					PSIG				
	SS 1/2" NPT PROCESS CONNECTION, NSF 61	AND SPEC.					DEGF		60		
	CERTIFIED WETTED COMPONENTS.										
PI-702	SOFTENED POTABLE WATER STRAINER OUTLET	WIKA	0 TO 100 PSIG		40 70 00	3/4"-PVC80-SW-703		POTABLE WATER		LIQUID	
0		PRESSURE GAUGE	--- to --- ---				GPM				
PI-26		213.53DW**					PSIG	40	60	75	
	DIRECT READING, BOURDON TUBE, 2.5" DIAL, LOWER	**MANUFACTURER TO COMPLETE MODEL NUMBER BASED ON CONDITIONS					PSIG				
	SS 1/2" NPT PROCESS CONNECTION, NSF 61	AND SPEC.					DEGF	50	55	60	
	CERTIFIED WETTED COMPONENTS.										

TAG NO.	TAG DESCRIPTION	MANUFACTURER	INST RANGE		SPEC NO.	LINE		FLUID		FLUID STATE	
REV		DEVICE	CALIB RANGE		PLAN	PIPESPEC		MINIMUM	NORMAL	MAXIMUM	DESIGN
PID NO.		MODEL	SUPPLY	INSTALL	INST DTL	LINE CODE	ENG UNITS	FLOW RATE			
	INST DESCR 1	INST DESCR2						INLET PRESSURE			
								OUTLET PRESSURE			
								TEMPERATURE			

110 - FLOW MEASUREMENT (DP)

								AIR		GAS	
FIT-607	DAF SCOUR AIR BLOWER FLOW	ROSEMOUNT	0 TO 100 INWC		40 70 00	8"-SS304-CA-601					
0		ORIFICE DP FLOW XMTR	0 to 100 INWC				SCFM	320	400	480	
PI-22		3051S** & 1595**					PSIG	6	8	10	
	ORIFICE PLATE AND DIFFERENTIAL PRESSURE FLOW TRANSMITTER, BETA RATIO ESTIMATED AS 0.4, STAINLESS STEEL ORIFICE AND 150# FLANGE, FLANGE TAPS, PROVIDE WITH THERMOWELL AND RTD FOR DIRECT-WIRED COMPENSATION.	**MANUFACTURER TO COMPLETE MODEL NUMBER BASED ON CONDITIONS AND SPEC.					PSIG		8		
							DEGF	50	60	159	

TAG NO.	TAG DESCRIPTION	MANUFACTURER	INST RANGE		SPEC NO.	LINE		FLUID		FLUID STATE	
REV		DEVICE	CALIB RANGE		PLAN	PIPESPEC		MINIMUM	NORMAL	MAXIMUM	DESIGN
PID NO.		MODEL	SUPPLY	INSTALL	INST DTL	LINE CODE	ENG UNITS	FLOW RATE			
	INST DESCR 1	INST DESCR2						INLET PRESSURE			
								OUTLET PRESSURE			
								TEMPERATURE			

160 - MAGNETIC FLOWMETERS

01-FIT-013	RAW WATER FLOW	ENDRESS+HAUSER	0 TO 30 FT/S		40 70 00			RAW WATER		LIQUID	
0		MAGNETIC FLOWMETER	0 to 1700 GPM				GPM	1000	1500	1700	
PI-03		PROMAG W400**					PSIG		60		
	8" MAGMETER, NSF 61 CERT, 4-20mA HART, 150# CS FLANGES, 2 SS GROUNDING RINGS, INTEGRAL MOUNT XMTR, FACTORY CALIBRATION CERT, ALUMINUM ELECTRONICS HOUSING.	**MANUFACTURER TO COMPLETE MODEL NUMBER BASED ON CONDITIONS AND SPEC.					PSIG				
							DEGF		60		
FIT-1004	HIGH SERVICE PUMP DISCHARGE FLOW	ENDRESS+HAUSER	0 TO 30 FT/S		40 70 00			FINISHED WATER		LIQUID	
0		MAGNETIC FLOWMETER	200 to 2400 GPM				GPM	1000	1500	1700	
PI-19		PROMAG W400**					PSIG				
	8" MAGMETER, NSF 61 CERT, 4-20mA HART, 150# CS FLANGES, 2 SS GROUNDING RINGS, INTEGRAL MOUNT XMTR, FACTORY CALIBRATION CERT, ALUMINUM ELECTRONICS HOUSING.	**MANUFACTURER TO COMPLETE MODEL NUMBER BASED ON CONDITIONS AND SPEC.					PSIG				
							DEGF		60		
FIT-312	POTABLE WATER BACKWASH SUPPLY FLOW	ENDRESS+HAUSER	0 TO 30 FT/S		40 70 00	8"-PVC80-PW-303		POTABLE WATER		LIQUID	
0		MAGNETIC FLOWMETER	0 to 1000 GPM				GPM	500	750	1000	
PI-12		PROMAG W400**					PSIG		60		
	8" MAGMETER, NSF 61 CERT, 4-20mA HART, ZERO RUN CONSTRICTED MEASURING TUBE, 150# CS FLANGES, 2 SS GROUNDING RINGS, INTEGRAL MOUNT XMTR, FACTORY CALIBRATION CERT, ALUMINUM ELECTRONICS HOUSING.	**MANUFACTURER TO COMPLETE MODEL NUMBER BASED ON CONDITIONS AND SPEC.					PSIG				
							DEGF		60		
FIT-313	FILTER 1 CLEAN EFFLUENT FLOW	ENDRESS+HAUSER	0 TO 30 FT/S		40 70 00	6"-PVC80-FW-302		FINISHED WATER		LIQUID	
0		MAGNETIC FLOWMETER	100 to 350 GPM				GPM	125	200	350	
PI-16		PROMAG W400**					PSIG		60		
	6" MAGMETER, NSF 61 CERT, 4-20mA HART, ZERO RUN CONSTRICTED MEASURING TUBE, 150# CS FLANGES, 2 SS GROUNDING RINGS, REMOTE XMTR W/20' CABLE, FACTORY CALIBRATION CERT, ALUMINUM ELECTRONICS HOUSING.	**MANUFACTURER TO COMPLETE MODEL NUMBER BASED ON CONDITIONS AND SPEC.					PSIG				
							DEGF		60		
FIT-314	FILTER 2 CLEAN EFFLUENT FLOW	ENDRESS+HAUSER	0 TO 30 FT/S		40 70 00	6"-PVC80-FW-305		FINISHED WATER		LIQUID	
0		MAGNETIC FLOWMETER	100 to 350 GPM				GPM	125	200	350	
PI-16		PROMAG W400**					PSIG		60		
	6" MAGMETER, NSF 61 CERT, 4-20mA HART, ZERO RUN CONSTRICTED MEASURING TUBE, 150# CS FLANGES, 2 SS GROUNDING RINGS, REMOTE XMTR W/20' CABLE, FACTORY CALIBRATION CERT, ALUMINUM ELECTRONICS HOUSING.	**MANUFACTURER TO COMPLETE MODEL NUMBER BASED ON CONDITIONS AND SPEC.					PSIG				
							DEGF		60		

TAG NO. / REV / PID NO. / INST DESCR 1	TAG DESCRIPTION	MANUFACTURER / DEVICE / MODEL / INST DESCR2	INST RANGE / CALIB RANGE (SUPPLY / INSTALL)	SPEC NO. / PLAN / INST DTL	LINE / PIPESPEC / LINE CODE	ENG UNITS	FLUID MINIMUM	FLUID NORMAL	FLUID STATE MAXIMUM	FLUID STATE DESIGN
FIT-315	FILTER 3 CLEAN EFFLUENT FLOW	ENDRESS+HAUSER	0 TO 30 FT/S	40 70 00	6"-PVC80-FW-307		FINISHED WATER		LIQUID	
0		MAGNETIC FLOWMETER	100 to 350 GPM			GPM	125	200	350	
PI-16		PROMAG W400**				PSIG		60		
	6" MAGMETER, NSF 61 CERT, 4-20mA HART, ZERO RUN CONSTRICTED MEASURING TUBE, 150# CS FLANGES, 2 SS GROUNDING RINGS, REMOTE XMTR W/20' CABLE, FACTORY CALIBRATION CERT, ALUMINUM ELECTRONICS HOUSING.	**MANUFACTURER TO COMPLETE MODEL NUMBER BASED ON CONDITIONS AND SPEC.				PSIG				
						DEGF		60		
FIT-316	FILTER 4 CLEAN EFFLUENT FLOW	ENDRESS+HAUSER	0 TO 30 FT/S	40 70 00	6"-PVC80-FW-309		FINISHED WATER		LIQUID	
0		MAGNETIC FLOWMETER	100 to 350 GPM			GPM	125	200	350	
PI-16		PROMAG W400**				PSIG		60		
	6" MAGMETER, NSF 61 CERT, 4-20mA HART, ZERO RUN CONSTRICTED MEASURING TUBE, 150# CS FLANGES, 2 SS GROUNDING RINGS, REMOTE XMTR W/20' CABLE, FACTORY CALIBRATION CERT, ALUMINUM ELECTRONICS HOUSING.	**MANUFACTURER TO COMPLETE MODEL NUMBER BASED ON CONDITIONS AND SPEC.				PSIG				
						DEGF		60		
FIT-317	FILTER 5 CLEAN EFFLUENT FLOW	ENDRESS+HAUSER	0 TO 30 FT/S	40 70 00	6"-PVC80-FW-311		FINISHED WATER		LIQUID	
0		MAGNETIC FLOWMETER	100 to 350 GPM			GPM	125	200	350	
PI-16		PROMAG W400**				PSIG		60		
	6" MAGMETER, NSF 61 CERT, 4-20mA HART, ZERO RUN CONSTRICTED MEASURING TUBE, 150# CS FLANGES, 2 SS GROUNDING RINGS, REMOTE XMTR W/20' CABLE, FACTORY CALIBRATION CERT, ALUMINUM ELECTRONICS HOUSING.	**MANUFACTURER TO COMPLETE MODEL NUMBER BASED ON CONDITIONS AND SPEC.				PSIG				
						DEGF		60		
FIT-318	FILTER 6 CLEAN EFFLUENT FLOW	ENDRESS+HAUSER	0 TO 30 FT/S	40 70 00	6"-PVC80-FW-313		FINISHED WATER		LIQUID	
0		MAGNETIC FLOWMETER	100 to 350 GPM			GPM	125	200	350	
PI-16		PROMAG W400**				PSIG		60		
	6" MAGMETER, NSF 61 CERT, 4-20mA HART, ZERO RUN CONSTRICTED MEASURING TUBE, 150# CS FLANGES, 2 SS GROUNDING RINGS, REMOTE XMTR W/20' CABLE, FACTORY CALIBRATION CERT, ALUMINUM ELECTRONICS HOUSING.	**MANUFACTURER TO COMPLETE MODEL NUMBER BASED ON CONDITIONS AND SPEC.				PSIG				
						DEGF		60		
FIT-603	BACKWASH EQ BASIN OUTLET FLOW	ENDRESS+HAUSER	0 TO 30 FT/S	40 70 00			WATER		LIQUID	
0		MAGNETIC FLOWMETER	0 to 1000 GPM			GPM	500	750	1000	
PI-20		PROMAG W400**				PSIG		60		
	4" MAGMETER, NSF 61 CERT, 4-20mA HART, 150# CS FLANGES, 2 SS GROUNDING RINGS, INTEGRAL MOUNT XMTR, FACTORY CALIBRATION CERT, ALUMINUM ELECTRONICS HOUSING.	**MANUFACTURER TO COMPLETE MODEL NUMBER BASED ON CONDITIONS AND SPEC.				PSIG				
						DEGF		60		

TAG NO.	TAG DESCRIPTION	MANUFACTURER	INST RANGE		SPEC NO.	LINE		FLUID		FLUID STATE	
REV		DEVICE	CALIB RANGE		PLAN	PIPESPEC		MINIMUM	NORMAL	MAXIMUM	DESIGN
PID NO.		MODEL	SUPPLY	INSTALL	INST DTL	LINE CODE	ENG UNITS	FLOW RATE			
	INST DESCR 1	INST DESCR2						INLET PRESSURE			
								OUTLET PRESSURE			
								TEMPERATURE			

210 - LEVEL (PRESSURE)

LIT-501	SODIUM HYDROXIDE NaOH TOTE LEVEL	SENSORSONE	0 TO 5 FEET		40 70 00	1/2"-PVC80-NA-530		30% NaOH		LIQUID	
0		PRESSURE TRANSMITTER	0 to 53 INCH				GPM				
PI-23		LMK331**					PSIG	5	10	15	
	PRESSURE TRANSMITTER, WETTED MATERIALS COMPATIBLE WITH FLUID (PTFE, KALREZ, PVDF, PEEK, AND NYLON), COMPACT FIELD ENCLOSURE, 2-WIRE 4-20mA HART, ACCURACY +/- 0.5% FULL SCALE, LOOP POWERED.	**MANUFACTURER TO COMPLETE MODEL NUMBER BASED ON CONDITIONS AND SPEC.					PSIG				
							DEGF	50	55	60	
LIT-502	COAGULANT TOTE LEVEL	SENSORSONE	0 TO 5 FEET		40 70 00	1/2"-PVC80-NA-530		COAGULANT		LIQUID	
0		PRESSURE TRANSMITTER	0 to 53 INCH				GPM				
PI-24		LMK331**					PSIG	5	10	15	
	PRESSURE TRANSMITTER, WETTED MATERIALS COMPATIBLE WITH FLUID (PTFE, KALREZ, PVDF, PEEK, AND NYLON), COMPACT FIELD ENCLOSURE, 2-WIRE 4-20mA HART, ACCURACY +/- 0.5% FULL SCALE, LOOP POWERED.	**MANUFACTURER TO COMPLETE MODEL NUMBER BASED ON CONDITIONS AND SPEC.					PSIG				
							DEGF	50	55	60	

TAG NO. / REV / PID NO. / INST DESCR 1	TAG DESCRIPTION	MANUFACTURER / DEVICE / MODEL / INST DESCR2	INST RANGE / CALIB RANGE / SUPPLY / INSTALL	SPEC NO. / PLAN / INST DTL	LINE / PIPESPEC / LINE CODE	ENG UNITS	FLUID MINIMUM	FLUID NORMAL	FLUID STATE MAXIMUM	FLUID STATE DESIGN

220 - LEVEL (RADAR)

LIT-410	CHLORINE CONTACT BASIN A LEVEL	VEGA	49 FT	40 70 00			FINISHED WATER		LIQUID	
0		LEVEL TRANSMITTER	0 to 6 FT			GPM				
PI-17		VEGAPULS PS31**				PSIG		60		
	NON-CONTACT TIME OF FLIGHT 80 GHz RADAR TYPE LEVEL TRANSMITTER, 2-WIRE 4-20mA HART, +/- 2mm ACCURACY, ALUMINUM HOUSING, 1.5" OR STANDARD NPT MOUNTING WITH STAINLESS BRACKET, LOOP POWERED.	**MANUFACTURER TO COMPLETE MODEL NUMBER BASED ON CONDITIONS AND SPEC.				PSIG				
						DEGF		60		
LIT-420	CHLORINE CONTACT BASIN B LEVEL	VEGA	49 FT	40 70 00			FINISHED WATER		LIQUID	
0		LEVEL TRANSMITTER	0 to 6 FT			GPM				
PI-17		VEGAPULS PS31**				PSIG		60		
	NON-CONTACT TIME OF FLIGHT 80 GHz RADAR TYPE LEVEL TRANSMITTER, 2-WIRE 4-20mA HART, +/- 2mm ACCURACY, ALUMINUM HOUSING, 1.5" OR STANDARD NPT MOUNTING WITH STAINLESS BRACKET, LOOP POWERED.	**MANUFACTURER TO COMPLETE MODEL NUMBER BASED ON CONDITIONS AND SPEC.				PSIG				
						DEGF		60		
LIT-430	EXIST CLEARWELL LEVEL	VEGA	49 FT	40 70 00			FINISHED WATER		LIQUID	
0		LEVEL TRANSMITTER	0 to 6 FT			GPM				
PI-18		VEGAPULS PS31**				PSIG		60		
	NON-CONTACT TIME OF FLIGHT 80 GHz RADAR TYPE LEVEL TRANSMITTER, 2-WIRE 4-20mA HART, +/- 2mm ACCURACY, ALUMINUM HOUSING, 1.5" OR STANDARD NPT MOUNTING WITH STAINLESS BRACKET, LOOP POWERED.	**MANUFACTURER TO COMPLETE MODEL NUMBER BASED ON CONDITIONS AND SPEC.				PSIG				
						DEGF		60		
LIT-503	ORTHOPHOSPHATE CONCENTRATE DRUM LEVEL	VEGA	49 FT	40 70 00			ORTHOPHOSPHATE CONC		LIQUID	
0		LEVEL TRANSMITTER	0 to 35 INCH			GPM				
PI-25		VEGAPULS PS31**				PSIG	5	10	15	
	NON-CONTACT TIME OF FLIGHT 80 GHz RADAR TYPE LEVEL TRANSMITTER, 2-WIRE 4-20mA HART, +/- 2mm ACCURACY, ALUMINUM HOUSING, 1.5" OR STANDARD NPT MOUNTING WITH STAINLESS BRACKET, LOOP POWERED.	**MANUFACTURER TO COMPLETE MODEL NUMBER BASED ON CONDITIONS AND SPEC.				PSIG				
						DEGF	50	55	60	
LIT-601	BACKWASH EQ BASIN LEVEL	VEGA	49 FT	40 70 00			WATER		LIQUID	
0		LEVEL TRANSMITTER	0 to 7.5 FT			GPM				
PI-20		VEGAPULS PS31**				PSIG		60		
	NON-CONTACT TIME OF FLIGHT 80 GHz RADAR TYPE LEVEL TRANSMITTER, 2-WIRE 4-20mA HART, +/- 2mm ACCURACY, ALUMINUM HOUSING, 1.5" OR STANDARD NPT MOUNTING WITH STAINLESS BRACKET, LOOP POWERED.	**MANUFACTURER TO COMPLETE MODEL NUMBER BASED ON CONDITIONS AND SPEC.				PSIG				
						DEGF		60		

TAG NO.	TAG DESCRIPTION	MANUFACTURER	INST RANGE		SPEC NO.	LINE		FLUID		FLUID STATE	
REV		DEVICE	CALIB RANGE		PLAN	PIPESPEC		MINIMUM	NORMAL	MAXIMUM	DESIGN
PID NO.		MODEL	SUPPLY	INSTALL	INST DTL	LINE CODE	ENG UNITS	FLOW RATE			
	INST DESCR 1	INST DESCR2						INLET PRESSURE			
								OUTLET PRESSURE			
								TEMPERATURE			

280 - LEVEL SWITCHES

							WATER		LIQUID	
LSH-023	FILTRATION BLDG TRENCH LEVEL SWITCH HIGH	FLYGT	---		40 70 00					
0		HI LEVEL SWITCH	--- to --- ---			GPM				
PI-03		ENM-10**				ATM		1		
	FLOAT-TILT TYPE LEVEL SWITCH, SG = 1.0, SEALED CONSTRUCTION WITH INTEGRAL 20' CORD (PROVIDE NEMA 4X JBOX), SPDT OUTPUT RATED 10A 250VAC/DC, 316L HANGING BRACKET AND CABLE RELIEF CLAMP.	**MANUFACTURER TO COMPLETE MODEL NUMBER BASED ON CONDITIONS AND SPEC.								
						DEGF		60		

							WATER		LIQUID	
LSH-601	BACKWASH EQ BASIN LEVEL SWITCH HIGH	FLYGT	---		40 70 00					
0		HI LEVEL SWITCH	--- to --- ---			GPM				
PI-20		ENM-10**				ATM		1		
	FLOAT-TILT TYPE LEVEL SWITCH, SG = 1.0, SEALED CONSTRUCTION WITH INTEGRAL 20' CORD (PROVIDE NEMA 4X JBOX), SPDT OUTPUT RATED 10A 250VAC/DC, 316L HANGING BRACKET AND CABLE RELIEF CLAMP.	**MANUFACTURER TO COMPLETE MODEL NUMBER BASED ON CONDITIONS AND SPEC.								
						DEGF		60		

							WATER		LIQUID	
LSHH-601	BACKWASH EQ BASIN LEVEL SWITCH HIGH-HIGH	FLYGT	---		40 70 00					
0		HI-HI LEVEL SWITCH	--- to --- ---			GPM				
PI-20		ENM-10**				ATM		1		
	FLOAT-TILT TYPE LEVEL SWITCH, SG = 1.0, SEALED CONSTRUCTION WITH INTEGRAL 20' CORD (PROVIDE NEMA 4X JBOX), SPDT OUTPUT RATED 10A 250VAC/DC, 316L HANGING BRACKET AND CABLE RELIEF CLAMP.	**MANUFACTURER TO COMPLETE MODEL NUMBER BASED ON CONDITIONS AND SPEC.								
						DEGF		60		

TAG NO.	TAG DESCRIPTION	MANUFACTURER	INST RANGE		SPEC NO.	LINE		FLUID		FLUID STATE	
REV		DEVICE	CALIB RANGE		PLAN	PIPESPEC		MINIMUM	NORMAL	MAXIMUM	DESIGN
PID NO.		MODEL	SUPPLY	INSTALL	INST DTL	LINE CODE	ENG UNITS	FLOW RATE			
	INST DESCR 1	INST DESCR2						INLET PRESSURE			
								OUTLET PRESSURE			
								TEMPERATURE			

390 - TEMPERATURE GAUGES / THERMOWELLS

							POTABLE WATER		LIQUID	
TI-703	SOFTENED POTABLE WATER TEMPERATURE	ASHCROFT	0 TO 100 DEGF	40 70 00	1/2"-PE-SW-703					
0		PRESSURE GAUGE	--- to --- ---			GPM				
PI-27		30EL**				PSIG	40	60	75	
	DIRECT READING, 3" DIAL, LOWER SS 1/2" NPT PROCESS CONNECTION, NSF 61 CERTIFIED WETTED COMPONENTS.	**MANUFACTURER TO COMPLETE MODEL NUMBER BASED ON CONDITIONS AND SPEC.				PSIG				
						DEGF	50	55	60	

							POTABLE WATER		LIQUID	
TI-706	SOFTENED POTABLE WATER TEMPERATURE	ASHCROFT	0 TO 100 DEGF	40 70 00	1/2"-PE-SW-704					
0		PRESSURE GAUGE	--- to --- ---			GPM				
PI-29		30EL**				PSIG	40	60	75	
	DIRECT READING, 3" DIAL, LOWER SS 1/2" NPT PROCESS CONNECTION, NSF 61 CERTIFIED WETTED COMPONENTS.	**MANUFACTURER TO COMPLETE MODEL NUMBER BASED ON CONDITIONS AND SPEC.				PSIG				
						DEGF	50	55	60	

TAG NO.	TAG DESCRIPTION	MANUFACTURER	INST RANGE		SPEC NO.	LINE		FLUID		FLUID STATE	
REV		DEVICE	CALIB RANGE		PLAN	PIPESPEC		MINIMUM	NORMAL	MAXIMUM	DESIGN
PID NO.		MODEL	SUPPLY	INSTALL	INST DTL	LINE CODE	ENG UNITS	FLOW RATE			
	INST DESCR 1	INST DESCR2						INLET PRESSURE			
								OUTLET PRESSURE			
								TEMPERATURE			

401 - PH ANALYZERS

01-AIT-002	RAW WATER pH & TEMP	HACH	-2 TO 14 Ph	40 70 00		RAW WATER		LIQUID	
0		pH ANALYZER	4 to 9 pH		GPM				
PI-03		DPD1P1**			PSIG		60		
	ONLINE, pH ANALYZER WITH TEMPERATURE SENSOR, +/- 0.03 pH ACCURACY, 2-WIRE 4-20mA OUTPUTS FOR pH AND TEMPERATURE, PEEK BODY, GENERAL PURPOSE NON-HAZ AREA.	**MANUFACTURER TO COMPLETE MODEL NUMBER BASED ON CONDITIONS AND SPEC.			PSIG				
					DEGF		60		
02-AIT-202	POST DAF pH & TEMP	HACH	-2 TO 14 Ph	40 70 00		CLARIFIED WATER		LIQUID	
0		pH ANALYZER	4 to 9 pH		GPM				
PI-16		DPD1P1**			PSIG		60		
	ONLINE, pH ANALYZER WITH TEMPERATURE SENSOR, +/- 0.03 pH ACCURACY, 2-WIRE 4-20mA OUTPUTS FOR pH AND TEMPERATURE, PEEK BODY, GENERAL PURPOSE NON-HAZ AREA.	**MANUFACTURER TO COMPLETE MODEL NUMBER BASED ON CONDITIONS AND SPEC.			PSIG				
					DEGF		60		
03-AIT-302	POST FILTER pH & TEMP	HACH	-2 TO 14 Ph	40 70 00		FINISHED WATER		LIQUID	
0		pH ANALYZER	4 to 9 pH		GPM				
PI-16		DPD1P1**			PSIG		60		
	ONLINE, pH ANALYZER WITH TEMPERATURE SENSOR, +/- 0.03 pH ACCURACY, 2-WIRE 4-20mA OUTPUTS FOR pH AND TEMPERATURE, PEEK BODY, GENERAL PURPOSE NON-HAZ AREA.	**MANUFACTURER TO COMPLETE MODEL NUMBER BASED ON CONDITIONS AND SPEC.			PSIG				
					DEGF		60		
AIT-401	POST FILTER POST CHEM DOSE pH & TEMP	HACH	-2 TO 14 Ph	40 70 00		FINISHED WATER		LIQUID	
0		pH ANALYZER	4 to 9 pH		GPM				
PI-17		DPD1P1**			PSIG		60		
	ONLINE, pH ANALYZER WITH TEMPERATURE SENSOR, +/- 0.03 pH ACCURACY, 2-WIRE 4-20mA OUTPUTS FOR pH AND TEMPERATURE, PEEK BODY, GENERAL PURPOSE NON-HAZ AREA.	**MANUFACTURER TO COMPLETE MODEL NUMBER BASED ON CONDITIONS AND SPEC.			PSIG				
					DEGF		60		

TAG NO.	TAG DESCRIPTION	MANUFACTURER	INST RANGE		SPEC NO.	LINE		FLUID		FLUID STATE	
REV		DEVICE	CALIB RANGE		PLAN	PIPESPEC		MINIMUM	NORMAL	MAXIMUM	DESIGN
PID NO.		MODEL	SUPPLY	INSTALL	INST DTL	LINE CODE	ENG UNITS	FLOW RATE			
	INST DESCR 1	INST DESCR2						INLET PRESSURE			
								OUTLET PRESSURE			
								TEMPERATURE			

430 - CHLORINE ANALYZERS

						FINISHED WATER		LIQUID	
AIT-402	POST FILTER POST CHEM DOSE FREE CHLORINE	HACH	0 TO 20 PPM	40 70 00	GPM				
0		ORP ANALYZER	0 to 20 PPM		PSIG		60		
PI-17		CLF10**			PSIG				
	ONLINE, FREE CHLORINE ANALYZER WITH COMBO pH SENSOR, ACCURACY +/-3% OF REF TEST, PROVIDE ON VERTICAL STAINLESS STEEL PANEL WITH SENSORS AND FLOW CELLS AND DUAL CHANNEL SC200/EQUIVELANT CONTROLLER, 4-20mA 2-WIRE OUTPUTS.	**MANUFACTURER TO COMPLETE MODEL NUMBER BASED ON CONDITIONS AND SPEC.			DEGF		60		

TAG NO.	TAG DESCRIPTION	MANUFACTURER	INST RANGE		SPEC NO.	LINE		FLUID		FLUID STATE	
REV		DEVICE	CALIB RANGE		PLAN	PIPESPEC		MINIMUM	NORMAL	MAXIMUM	DESIGN
PID NO.		MODEL	SUPPLY	INSTALL	INST DTL	LINE CODE	ENG UNITS	FLOW RATE			
	INST DESCR 1	INST DESCR2						INLET PRESSURE			
								OUTLET PRESSURE			
								TEMPERATURE			

440 - TOC ANALYZERS

							RAW WATER		LIQUID	
01-AIT-001	RAW WATER TOC	HACH	0.4 TO 10 mg/L C		40 70 00					
0		TOC ANALYZER	0.4 to 10 mg/L C			GPM				
PI-03		EZ7100.990B220**				PSIG		60		
	ONLINE, TOTAL ORGANIC CARBON ANALYZER, 2-STREAM INFLOW, 2-CHANNEL 2-WIRE 4-20mA OUTPUT, 120V.	**MANUFACTURER TO COMPLETE MODEL NUMBER BASED ON CONDITIONS AND SPEC.				PSIG				
						DEGF		60		

							RAW WATER		LIQUID	
03-AIT-301	RAW WATER TOC	HACH	0.4 TO 10 mg/L C		40 70 00					
0		TOC ANALYZER	0.4 to 10 mg/L C			GPM				
PI-16		EZ7100.990B220**				PSIG		60		
	ONLINE, TOTAL ORGANIC CARBON ANALYZER, 2-STREAM INFLOW, 2-CHANNEL 2-WIRE 4-20mA OUTPUT, 120V.	**MANUFACTURER TO COMPLETE MODEL NUMBER BASED ON CONDITIONS AND SPEC.				PSIG				
						DEGF		60		

TAG NO.	TAG DESCRIPTION	MANUFACTURER	INST RANGE		SPEC NO.	LINE		FLUID		FLUID STATE	
REV		DEVICE	CALIB RANGE		PLAN	PIPESPEC		MINIMUM	NORMAL	MAXIMUM	DESIGN
PID NO.		MODEL	SUPPLY	INSTALL	INST DTL	LINE CODE	ENG UNITS	FLOW RATE			
	INST DESCR 1	INST DESCR2						INLET PRESSURE			
								OUTLET PRESSURE			
								TEMPERATURE			

450 - TURBIDITY ANALYZERS

01-AIT-004	RAW WATER TURBIDITY	HACH	0 TO 700 NTU		40 70 00			RAW WATER		LIQUID	
0		TURBIDITY ANALYZER	0 to 20 NTU				GPM				
PI-03		TU5300**					PSIG		60		
	ONLINE, TURBIDITY ANALYZER, 2-WIRE 4-20mA OUTPUT, +/- 2% ACCURACY OVER 0-40 NTU, 2 CHANNEL HACH SC4500 CONTROLLER.	**MANUFACTURER TO COMPLETE MODEL NUMBER BASED ON CONDITIONS AND SPEC.					PSIG				
							DEGF		60		
02-AIT-201	POST DAF TURBIDITY	HACH	0 TO 700 NTU		40 70 00			CLARIFIED WATER		LIQUID	
0		TURBIDITY ANALYZER	0 to 20 NTU				GPM				
PI-16		TU5300**					PSIG		60		
	ONLINE, TURBIDITY ANALYZER, 2-WIRE 4-20mA OUTPUT, +/- 2% ACCURACY OVER 0-40 NTU, 2 CHANNEL HACH SC4500 CONTROLLER.	**MANUFACTURER TO COMPLETE MODEL NUMBER BASED ON CONDITIONS AND SPEC.					PSIG				
							DEGF		60		
03-AIT-304	POST FILTER TURBIDITY	HACH	0 TO 700 NTU		40 70 00			FINISHED WATER		LIQUID	
0		CHLORINE ANALYZER	0 to 20 NTU				GPM				
PI-16		TU5300**					PSIG		60		
	ONLINE, TURBIDITY ANALYZER, 2-WIRE 4-20mA OUTPUT, +/- 2% ACCURACY OVER 0-40 NTU, 2 CHANNEL HACH SC4500 CONTROLLER.	**MANUFACTURER TO COMPLETE MODEL NUMBER BASED ON CONDITIONS AND SPEC.					PSIG				
							DEGF		60		

TAG NO.	TAG DESCRIPTION	MANUFACTURER	INST RANGE		SPEC NO.	LINE		FLUID		FLUID STATE	
REV		DEVICE	CALIB RANGE		PLAN	PIPESPEC		MINIMUM	NORMAL	MAXIMUM	DESIGN
PID NO.		MODEL	SUPPLY	INSTALL	INST DTL	LINE CODE	ENG UNITS	FLOW RATE			
	INST DESCR 1	INST DESCR2						INLET PRESSURE			
								OUTLET PRESSURE			
								TEMPERATURE			

452 - ALKALINITY ANALYZERS

							RAW WATER		LIQUID	
01-AIT-003	RAW WATER ALKALINITY	HACH	0 TO 500 mg/L CaCO3		40 70 00					
0		ALKALINITY ANALYZER	0 to 300 mg/L CaCO3			GPM				
PI-03		EZ**				PSIG		60		
	ONLINE INTERMITTENT, ALKALINITY (AS CALCIUM CARBONATE) ANALYZER, 2-STREAM INFLOW, 2-CHANNEL 2-WIRE 4-20mA OUTPUT, 120V, 2 CHANNEL HACH SC4500 CONTROLLER.	**MANUFACTURER TO COMPLETE MODEL NUMBER BASED ON CONDITIONS AND SPEC.				PSIG				
						DEGF		60		

							FINISHED WATER		LIQUID	
03-AIT-303	RAW WATER ALKALINITY	HACH	0 TO 500 mg/L CaCO3		40 70 00					
0		ALKALINITY ANALYZER	0 to 300 mg/L CaCO3			GPM				
PI-16		EZ**				PSIG		60		
	ONLINE INTERMITTENT, ALKALINITY (AS CALCIUM CARBONATE) ANALYZER, 2-STREAM INFLOW, 2-CHANNEL 2-WIRE 4-20mA OUTPUT, 120V, 2 CHANNEL HACH SC4500 CONTROLLER.	**MANUFACTURER TO COMPLETE MODEL NUMBER BASED ON CONDITIONS AND SPEC.				PSIG				
						DEGF		60		

SECTION 40 75 15 – NETWORK AND COMMUNICATIONS EQUIPMENT

PART 1 - GENERAL

1.1 SUMMARY

A. Section Includes:
   1. Network switches and ancillary equipment.
   2. Network communication requirements

1.2 SYSTEM DESCRIPTION

A. Provide switches, power cables, communication cables, adapters, and ancillary components, as required.

1.3 SUBMITTALS

A. Section 01 33 00 – Shop Drawing Submittals: Submittal Procedures.

B. Product Data: Submit catalog data for each component specified showing electrical characteristics and connection requirements.

C. Shop Drawings: Indicate electrical characteristics and connection requirements, including layout of completed assemblies, interconnecting cabling, dimensions, weights, and external power requirements.

1.4 QUALITY ASSURANCE

A. Ensure that materials of construction of wetted parts are compatible with process liquid.

B. Materials in Contact with Potable Water: Comply with NSF 61 and NSF 372.

1.5 STORAGE, HANDLING, AND DELIVERY

A. Inspection: Accept materials on Site in manufacturer's original packaging and inspect for damage.

B. Store equipment according to manufacturer instructions.

C. Protection: Protect materials from moisture and dust by storing in clean, dry location remote from construction operations areas as well as any additional protection according to manufacturer instructions.

1.6 WARRANTY

A. Special Warranty: In addition to manufacturer’s warranty, Contractor shall warranty equipment for a period of one year after Substantial Completion.

PART 2 – PRODUCTS

2.1 NETWORK SWITCHES

A. Manufacturers:
   1. Ubiquiti.
   2. Substitutions: Engineer approved equal.

B. Ports:
   1. Qty 24: Copper Ports.
   2. Qty 2: SFP Ports.

C. Fiber:
   1. Type: Multimode.
   2. Connectors: SC.

D. Operating Voltage: 120 VAC.

E. Mounting: 19” Rack Mount.

2.2 CONTROL PANEL SWITCHES

A. Manufacturers:
   1. Phoenix Contact.
   2. Substitutions: Engineer approved equal.

PART 3 - EXECUTION

3.1 FIELD QUALITY CONTROL

A. Tests and Inspections:
   1. Inspect wiring, components, connections, and equipment installation. Test and adjust controls, components, and equipment.
   2. Correct malfunctioning units on-site, where possible, and retest to demonstrate compliance; otherwise, replace with new units and retest.

B. Equipment will be considered defective if they do not pass tests and inspections.

3.2 STARTUP SERVICES

A. Complete installation and startup checks according to manufacturer's written instructions.

3.3 DEMONSTRATION

A. The Systems Integrator shall train Owner's personnel to adjust, operate, reprogram, and maintain equipment.

END OF SECTION

SECTION 43 11 33 – POSITIVE DISPLACEMENT BLOWERS

PART 1 - GENERAL

1.01 DESCRIPTION

A. Scope:
   1. Contractor shall provide all labor, materials, equipment and incidentals as shown, specified and required to furnish and install rotary positive displacement blowers complete and operational.
   2. Included, but not limited to, are the following components for each unit:
      a. Blower.
      b. Electric motor.
      c. Adjustable V belt drive and common base.
      d. Accessories.
      e. Control panel (common or individual as specified).

B. Coordination:
   1. Review installation procedures under this and other Sections and coordinate installation of items that must be installed with, or before rotary positive displacement blowers Work.
   2. Notify other contractors in advance of installation of rotary positive displacement blowers to provide them with sufficient time for installation of items included in their contracts that must be installed with, or before, rotary positive displacement blowers Work.

C. Related Sections
   1. Section 09 90 00 – Painting and Coating.
   2. Division 40, Applicable Sections on Instrumentation and Controls.
   3. Division 40, Applicable Sections on Piping, Valves and Appurtenances.
   4. Division 26, Electrical.

1.02 REFERENCES

A. Standards referenced in this Section are listed below:
   1. American Bearing Manufacturers Association, (ABMA).
   2. American Gear Manufacturers' Association, (AGMA).
   3. American Institute of Steel Construction, Inc., (AISC).
      a. AISC 316, Manual of Steel Construction ASD.
   4. American National Standards Institute, (ANSI).
      a. ANSI B16.1, Cast-Iron Pipe Flanges and Flanged Fittings.
      b. ANSI S5.1, CAG1-PNEUROP Test Code for the Measurement of Sound from Pneumatic Equipment.
   5. American Society of Mechanical Engineers, (ASME).
      a. ASME, PTC 10 Test Code on Compressors and Exhausters.
   6. American Society for Testing and Materials, (ASTM).
   7. American Welding Society, (AWS).
      a. AWS D1.1/D1.1M, Structural Welding Code-Steel.
   8. Institute of Electrical and Electronics Engineers, (IEEE).
   9. National Electrical Code, (NEC).
   10. National Electrical Manufacturers' Association, (NEMA).

1.03 SUBMITTALS

A. Shop Drawings: Submit the following:
   1. Manufacturer's literature, illustrations, specifications and engineering data.

2. Drawings showing fabrication methods, assembly, accessories, installation details and wiring diagrams.
3. Setting drawings, templates, and directions for installation of anchor bolts and other anchorages.
4. Drawings of control panels shall be in accordance with requirements of Section 13401, Plant Monitoring and Control System General Requirements.
5. A certified motor data sheet for each type and size of motor. Data sheets shall show winding resistances; torques; guaranteed minimum efficiencies at full, 3/4 and 1/2 load; power factors; slip; full load, locked rotor and running light amperes; temperature rises and results of dielectric tests. All values shall be from tests of job motor or previously manufactured electrically duplicate motor. Data sheet shall be marked to indicate motor application, manufacturer, type, frame size, bearing type, lubrication medium, insulation type, and enclosure type.

B. Shop Test Results:
1. Submit test curves of actual blowers furnished, or from standard units previously tested.
2. Submit an inspection report for routine test of each motor and certified motor sheet from previously manufactured electrically duplicate motor which was tested.

C. Field Test Results: Submit written report giving results of field tests required.

D. Operation and Maintenance Manuals:
1. Submit complete Installation, Operation and Maintenance Manuals, including, test reports, maintenance data and schedules, description of operation, and spare parts information.
2. Furnish Operation and Maintenance Manuals in conformance with requirements of Section 01781, Operation and Maintenance Data.

E. Lubricant Specification: Furnish lubricant specification for type and grade necessary to meet requirements of equipment.

1.04 QUALITY ASSURANCE

A. Manufacturer's Qualifications: Manufacturer shall have minimum of five years experience producing substantially similar equipment and shall be able to show evidence of at least five installations in satisfactory operation for at least five years.

B. Component Supply and Compatibility:
1. Obtain all equipment included in this Section regardless of component manufacturer from single rotary positive displacement blowers' manufacturer.
2. Rotary positive displacement blowers' equipment manufacturer to review and approve or to prepare all Shop Drawings and other submittals for all components furnished under this Section.
3. All components shall be specifically constructed for specified service conditions and shall be integrated into overall assembly by rotary positive displacement blowers' equipment manufacturer.

1.05 DELIVERY, STORAGE, AND HANDLING

A. Packing, Shipping, Handling and Unloading:
1. Deliver materials to Site to ensure uninterrupted progress of Work. Deliver anchor bolts and anchorage devices which are to be embedded in cast-in-place concrete in ample time to prevent delay of that Work.
2. Ship blowers with openings sealed.

B. Storage and Protection: Store materials to permit easy access for inspection and identification. Keep all material off ground, using pallets, platforms, or other supports. Protect steel members and packaged materials from corrosion and deterioration.

C. Acceptance at Site: All boxes, crates and packages shall be inspected by Contractor upon delivery to Site. Contractor shall notify Engineer, in writing, if any loss or damage exists to equipment or components. Replace loss and repair damage to new condition in accordance with manufacturer's instructions.

PART 2 - PRODUCTS

2.01 MANUFACTURERS

A. Equipment specified herein is intended to be standard equipment for use in low pressure air systems and be supplied by single manufacturer or authorized sales representative to assure uniform quality, ease of maintenance, and minimal parts storage.

B. Manufacturer List:
   1. Kaeser Compressors, Inc.
      a. Model – CBS121
   2. or Approved equal

C. Plan layouts, weights, and pertinent specification language used in design have been based upon Kaeser Compressors, Inc. equipment. Any changes required to accommodate equipment other than basis of design shall be provided by Contractor at no additional expense to Owner. Furthermore, complete and detailed deviation list from specification shall be provided with proposal.

2.02 DESIGN CRITERIA

A. Standard Conditions for SCFM:
   1. Elevation: 14.7 PSIA (0’ elevation)
   2. Temperature: 68°F.
   3. Relative Humidity: 36%

B. Design (site) Conditions for ICFM:
   1. Elevation: 14.56 PSIA (262’ elevation)
   2. Blower Inlet Temperature Maximum: 0°F.
   3. Blower Inlet Temperature Minimum: 100°F.
   4. Relative Humidity: 90% (relative humidity at maximum blower inlet temperature.)
   5. Blower Package Ambient Temperature Maximum: 68°F.
   6. Blower Package Ambient Temperature Minimum: 75°F.

C. Performance Data:
   1. Application: Filter Backwash Air Scour
   2. Quantity: 2
   3. Blower Packaged Controlled by VFD: Yes
   4. Flow required: 480 SCFM/per
   5. Blower Package Discharge Pressure: 5.0 PSIG
   6. Blower air end: L-Low pressure
   7. Motor Horsepower: 25 HP
   8. Power supply voltage:
      a. Blower Package: 460v/ 3ph/ 60hz
      b. Incoming supply configuration: center grounded WYE

c. Blower Package Sound Level: 80 dB(A) at 3’

D. Performance Guarantee:
1. Blower sound level shall be guaranteed by manufacturer to be within allowed tolerances of ISO 2151, +/- 3 dB(A) at 1m, free field conditions, with insulated piping.
2. Blower element performance provided by manufacturer shall be guaranteed per ISO 1217, Annex B.
3. Specific performance (kw/100-cfm) of complete Rotary-Screw blower package provided by manufacturer shall be guaranteed to provide performance to ISO 1217, Annex C/E. For flows 50 to 500 CFM, permissible tolerance on flow is +/- 5% and specific performance tolerance is +/- 6%. For flows greater than 500 CFM, permissible tolerance on flow is +/-4% and specific performance tolerance is +/- 5%.

E. Plant System Communication: Interface: EtherNet/IP

2.03 BLOWER PACKAGE CONFIGURATION

A. Installation Location: Inside.

B. Inlet Configuration: Piped.

C. All components and instrumentation are to be mounted and pre-piped; no field installation shall be required by Contractor. Manufacturer shall be responsible for all aspects of engineering, from blower package’s air inlet to its discharge connection.

2.04 BARE BLOWER CONSTRUCTION

A. Blower type:
1. Bare blower shall be factory mounted for package base frame, be of oil-free, positive displacement, rotary-screw type, designed for air or other inert gas service, and directly coupled and gear driven by electric motor.
2. Bare blower assembly must operate at effective value for vibration velocity in frequency range A and B, according to VDI 3836.

B. Material: AISI, ASTM, GJL, GLS, DIN, etc…, numbers, types, and grades specified are typical of material composition and quality, equivalent materials will be considered.

C. Housing:
1. Casing shall be made of high strength, close grained, cast iron, and shall be adequately ribbed to prevent casing deflection and facilitate cooling. Casing shall be of EN GJL-200 material.
2. Casing shall be precision machined to allow for minimum clearances.
3. Casing shall allow for thermal decoupling of gearbox section allowing for low oil temperature. No additional oil cooler, oil pump or oil filter in oil circuit is acceptable.
4. Reliable separation of compression chamber from oil chamber with no-wear air-side labyrinth sleeve oil sealing ring and oil-side spiral sealing ring, to include an atmospheric break between air-side and oil-side.
5. Bearing fits shall be precision machined to ensure accurate positioning of rotors in casing.

D. Rotors:
1. Primary rotor shall be machined out of one piece casting made of EN GJL-250 material.
2. Secondary rotor and shaft shall be machined out of one-piece casting made of EN GJL-500 material.
3. Shaft of primary rotor shall be press fit and machined out of C45 shaft material.

4. Rotors shall be machined with precision tolerance to ensure consistent rotor clearance and stable volumetric efficiency.
5. Rotor assemblies shall be statically and dynamically balanced to ISO standard 1940/1- Q2.5 (turbine rotor).
6. Rotors shall have energy-efficient Screw Profile for maximum degree of delivery.
7. Rotors shall operate without rubbing, liquid seals or lubrication in air chamber. No wear-prone surface coating shall be allowed.

E. Cover Plates:
1. Drive and gear-end cover plates shall be high strength, close grained, cast iron material. Aluminum end plates shall not be allowed.
2. Cover plates shall have precision machined sealing face.
3. Drive end plate shall include at least two precision machined holes to allow for use of fitting bolts to accurately align opening for input shaft seal.

F. Timing Gears: Rotor timing gears shall be precision machined from case hardened, ground alloy steel to quality standard 5f 21. Each timing gear shall be straight cut, beveled, and precision ground to eliminate axial bearing loads and ensure long life as well as quiet operation.

G. Bearings:
1. All four rotor shaft support locations shall incorporate large, heavy-duty, full complement, cylindrical roller bearings with PEEK cages to absorb radial gas forces which affect rotors and change continuously.
2. An additional gear side ball bearing set loaded for axial forces only.
3. Bearings minimum acceptable L10 design life shall be as follows:
   a. At least 100,000 hours at design conditions.

H. Lubrication:
1. Both gear-end and drive-end of blowers shall be oil splash lubricated via disc slinger for minimal maintenance and long service life.
2. Lubrication design shall ensure adequate lubrication of timing gears and bearings.
3. Drive-end and gear-end oil chambers shall not be interconnected. Each oil chamber shall have x1 drive-end and x2 gear-end domed designed sight glasses which will allow visual inspection of oil level and oil condition, viewable from front of blower. Recessed or flat sight glasses are not allowed.
4. Blower to be factory filled with synthetic lubricating fluid that is rated for design conditions specified.

I. Rotor Seal Assembly:
1. Each rotor shall include one seal assembly on each end, four assemblies in total per blower. Each seal assemble shall consists of following:
   a. Oil splash guard ring.
   b. Shaft guide wear sleeve with vent holes located between air and oil seals.
   c. Replaceable wear sleeve to protect blower casing.
   d. Two piston ring type labyrinth seals made from heat treated GG/42CrMo4 material shall be located on air side and two spiral sealing seals shall be located on oil side of rotor sleeve. Use of rubber lip seals shall not be allowed.
   e. Seal assemblies shall not require an additional vacuum pump or electric oil mist separator for sealing effect.

J. Input Shaft Seal Assembly:

1. Input drive shaft seal shall be sliding ring type mechanical seal that will prevent oil leakage from where input shaft goes thru drive end cover plate.
2. Mechanical seal assembly shall consist of following:
   a. Replaceable wear sleeve on input drive shaft.
   b. Cover plate with machined sealing surface.
   c. Mechanical sliding ring seal.
3. Input s haft seal design must allow for mechanical seal assembly to be replaced without removing drive-end cover plate.

2.05 MOTORS

A. Drive Motor:
   1. Motor shall be designed, manufactured, and tested in accordance with latest revised editions of NEMA MG-1, IEC, DIN, ISO, IEEE, ANSI, and AFBMMA standards as applicable and shall be capable of continuous operation.
   2. Motor must exceed Energy Independence and Security Act (EISA 2007) standards for NEMA Premium efficiency. It shall also be marked with Department of Energy Certification Compliance Number to assure compliance.
   3. Motor shall comply with Low Voltage Directive 2006/95/EC or equivalent and be UL listed.
   4. Motor must be inverter rated with impulse peak resistance in accordance with IEC 60034-17 or equivalent for operation with an IGBT frequency converter or equivalent.
   5. Temperature rise of motor windings shall not exceed IEC and NEMA standards when motor is operated continuously at rated horsepower, rated voltage, and frequency in ambient conditions at 104ºF (40ºC).
   6. Motor shall be suitable for Full Load/Direct On-line starting, Solid State Ramp starting, VFD, and/or Wye-Delta reduced current starting.
   7. Motor to be supplied, mounted and aligned by blower package manufacturer.
   8. VFD controlled motor (=>25HP) shall have an isolated non drive end “B-side” bearing.
   9. Motor shall confirm to the following:
      a. Motor voltage: 460v/ 3ph/ 60hz
      b. Type: Asynchronous or Synchronous Reluctance
      c. Speed: Single
      d. Torque: Constant
      e. Enclosure: TEFC
      f. Mounting: Horizontal
      g. Speed: 0-100%
      h. Design: A
      i. Duty cycle: continuous (24 hours a day)
      j. Winding insulation: Class F
      k. Temperature rise: Limited to Class B
      l. Thermal motor protection: Pt100 resistance
      m. Conduit box location: Left side from shaft end
      n. Wiring Connection: Terminal strip inside conduit box. Use of wire nuts for connection of motor wiring to power source shall not be allowed.
      o. Bearing L10 life: >60,000 hours
      p. Bearing lubrication: Grease
      q. Bearing type: Greaseable,
         1) Lubrication fittings must be located towards front of blower package so that both bearings can be safely lubricated while blower package is running.
      r. Bearing design: Ball type

s. Condensation winding 110v heater: No

10. Motor shall be as manufactured by Siemens or approved equal.

B. Sound enclosure ventilation fan motor:
1. Motor shall be UL listed.
2. Motor starter/overload protection shall be provided and wired.
3. Motor shall turn “on” when main motor starts and turn “off” after predetermined time after main motor stops.
4. Ventilating fans mounted on blower or motor shaft are not allowed.

2.06 BLOWER PACKAGE

A. Drive:
1. Blower shall be driven by direct coupled gear driven system.
2. Robust slip-free gear drive system, which requires no additional oil chambers, oil pumps, or additional bearings shall be utilized.
3. Drive gears shall be integrated into blower drive side oil chamber.
4. No additional oil pump, oil reservoir, or heat exchangers shall be used.
5. Drive motor with flanged direct mount face. Drive motor shall use grease-filled bearings.
6. Heavy duty mechanical blower/drive shaft seal with drain system towards motor face.
7. Low radial loads of motors ball bearing design for long bearing lifetime.
8. Integrated motor shaft grounding system for VFD use to prevent shaft current damages to blower.

B. Inlet Silencer:
1. An inlet silencer designed for frequency range of blower, shall be provided to reduce noise of blower package as specified.
a. Inlet silencer shall be of carbon steel construction and be of wear-free absorptive type, directly connected to inlet port of blower, and shall be mounted horizontally.
b. Inlet silencer shall be lined with replaceable polyether absorptive material.
c. Inlet silencer shall have an integral filter designed to protect blower from particulates. It shall be located between absorptive material and blower inlet.
1) Filter element shall be washable and reusable polyester element for minimal pressure drop.
2) Filter efficiency shall meet ASHRAE 52.2 MERV7 50-70%% @ 3-10 microns corresponding to EN779 G4.
3) Filter element integral to silencer shall be supplied no matter if inlet configuration of silencer is ambient or piped. If required on piped inlet configuration, any additional filtration or screening at inlet location of piped inlet air source is not responsibility of blower manufacturer.
4) Filter element shall be removable without disconnecting inlet duct.
d. Filter maintenance cover and element must be removable by hand (without use of tools).
e. Pressure loss through inlet silencer assembly shall be accounted for in motor horsepower selection of blower package.
f. If required on piped inlet configuration, any additional filtration or screening at inlet location of piped inlet air source is not responsibility of blower manufacturer.

C. Base Frame:
1. Elevated base frame shall support blower airend, valves, and silencers completely pre-mounted on elastic machine mounts.
2. Provisions for mounting of blower discharge silencer and accessories shall be included.

D. Discharge Silencer:
   1. Discharge silencer is to be designed for frequency range of blower and is to reduce noise of blower package as specified.
   2. Discharge silencer should mount to blower discharge port via flexible tube type connector.
   3. Discharge silencer shall be of carbon steel construction.
   4. Discharge silencer shall incorporate solid outer shell and perforated inner cylinder with absorptive material in between cylinders.
   5. Absorptive material shall be long, flexible, knotted polyester fibers to prevent fiber migration, to allow for lowering noise and to reduce heat emissions inside sound enclosure. Use of mineral wool or attenuating blankets will not be allowed.
   6. Discharge silencer shall have connection port for pressure relief valve, pressure and temperature probes, and unloaded starting valve. Unused ports should be capped or plugged.
   7. Pressure loss through discharge silencer assemble shall be accounted for in motor horsepower selection of blower package.

E. Blower Sound Enclosure:
   1. Sound enclosure shall be provided which fully covers blower, motor, drive assembly, inlet silencer, blower base frame, discharge silencer, and shall be shipped fully assembled.
      a. Sound enclosure shall be product of blower manufacturer to insure proper integration of blower package components.
      b. Sound enclosure shall meet sound level specified.
      c. Sound enclosure shall be fitted with heavy foam, bulk density 120 kg/m3.
      d. Sound enclosure assembly shall be of self-supporting bolted steel panel construction on fabricated steel skid.
         1) All maintenance removable panels or doors shall be located in front of sound enclosure and must have slotted key lock. Door key shall be provided. All maintenance panels shall meet OSHA weight requirements.
         2) Enclosure base shall be designed to enclose full bottom of sound enclosure and include fork lift guides for easy transportation and installation.

      e. Sound enclosure ventilation cooling air circuit shall be separate from process air circuit. Mixing of two air circuits within enclosure shall not be allowed.
      f. Sound enclosure shall have set of inlet louvers positioned on blower-side of enclosure to allow for flow of ambient cooling air across blower oil chambers.
      g. Screened inlet louver shall be located on back of enclosure and designed to provide laminar flow of ambient cooling air across blower drive motor.
      h. Sound enclosure ventilation air exhaust and ventilation fan shall be located at top of sound enclosure.
         1) Ventilation fan shall be sized to provide adequate cooling of blower package at all blower speeds. Shaft-mounted fans are not allowed.

F. Control Cabinet:
   1. Control cabinet located on side of sound enclosure shall be preinstalled and wired on sound enclosure skid.
   2. Control cabinet shall be UL-508A approved and shall meet or exceed IP52 standards for environmental protection.
   3. Back of control cabinet shall have predrilled holes with grommets for easy pass through of electrical wiring.
   4. Control cabinet’s back plate shall be galvanized for improved grounding.

5. Rotary-Screw VFD blower package's control cabinet shall have lockable hinged door which allows access to factory installed variable frequency drive, enclosure vent fan starter, terminals, relays, operator control panel, cabinet cooling fan and all interconnecting wiring.
    a. Control cabinet shall utilize high cooling fan to remove heat from cabinet and maintain proper operating temperatures.

6. Rotary-Screw Constant Speed blower package's control cabinet shall have lockable hinged door which allows access to factory installed main motor starter, enclosure vent fan starter, terminals, relays, operator control panel and all interconnecting wiring.
    a. Main motor starter shall be magnetic, Wye-Delta, reduced-current starter, to ensure low starting current and soft start.

G. Operator Control Panel:
1. Operator control panel shall include controller. Controller shall be suitable for use in an ambient temperature range of -4ºF to +140ºF.
2. Controller shall be suited for specified conditions as previously listed and include an industrial PC with powerful processing software that will allow for control, regulation, and monitoring of blower package, along with allowing display and modification of machine settings and external communication.
    a. Controller shall include stabilized 24VDC power supply and real time clock with scheduling timer.
    b. Buffer battery with ten-year lifetime shall be included for protection of system memory and internal clock.
    c. Controller shall include digital and analog inputs/outputs for controlling and/or monitoring following:
        1) Main motor, sound enclosure ventilation fan motor and electrical cabinet ventilation fan motor (Rotary-Screw VFD blower package).
        2) Emergency stop push button
        3) Incoming power monitor relay for phase failure, undervoltage, overvoltage, and phase sequence
        4) Blower inlet and discharge temperature
        5) Blower inlet and discharge pressure
        6) Filter differential pressure
        7) Sound enclosure temperature
        8) Oil temperature and oil level

    d. Controller shall have ability for operator to be able to externally wire following digital input/output signals.
        1) Remote on/off (DI)
        2) Remote reset of fault message (DI)
        3) Remote no external failure (DI)
        4) Blower running signal (DO)
        5) Blower on signal (DO)
        6) Group alarm signal (DO)
        7) Group warning signal (DO)
        8) Remote 4-20mA blower speed signal (Rotary-Screw VFD blower packages) (AI)
        9) 4-20mA speed output from inverter (Rotary-Screw VFD blower packages) (AO)

    e. Controller shall include touch key controls with LED indications on important functions.
    f. Controller display shall be LED backlit with plain text and graphical display capable of displaying blower packages status in various languages.

g. Controller shall utilize “Radio Frequency Identification” (RFID) Technology, which ensures secure log-in for users and service personnel so service work and system changes can be performed only by authorized and qualified personnel.
h. Controller shall include an integrated web server.
i. Controller shall include an SD card slot for manual loading of updates and recording of controller specific process data.
j. Controller shall include an expansion slot for communicating with various industrial protocols/plant monitoring systems.
k. Controller sensor connections shall be via central I/O module with labelled connections.
l. Controller shall include displayable operating and maintenance hour counters for major components.
m. Controller shall have ability to be timed controlled via up to 10 programmable timers.
n. Controller shall shut down blower package in event of motor overload, high blower differential temperature, high blower differential pressure, high sound enclosure temperature, in-correct rotation, loss of drive or external failure signal.
o. Controller shall have programmable and selectable auto re-start after loss of power.

3. Controller shall have ability to communicate status of blower package in following ways to operator.
   a. Local control status at controller display
   b. Remote machine status via supplied Ethernet connection
   c. Emailing of operational, warning or alarm conditions to operator via Ethernet port/connection.
      1) SMTP server required and not part of blower manufacturer’s scope of supply.
   d. Operator’s systems plant communication via any one of EtherNet/IP, Profibus DP, Modbus TCP/RTU, Devicenet, or Profinet
      1) Process data map of controller shall be supplied by blower manufacturer when required. Interface programming to systems plant controller is not included in blower manufacturer’s scope of supply.

4. Controller shall enable blower package to be controlled by the following ways.
   a. On and off directly at blower package.
   b. On and off remotely away from blower package.
   c. On and off from selectable timers in controller.

5. Rotary-Screw VFD blower package’s controller shall enable blower package to be controlled by following control modes.
   a. Pressure regulation with PID loop
      1) Controller automatically regulates deviations between setpoint and actual pressure by changing speed of drive motor. Customer selected value requires auxiliary 4-20mA input.
      2) Setpoint pressure shall be specified by setting parameter in controller. This shall be default control mode when blower package ships.
   b. Speed setting with an external 4-20mA signal: Motor speed must be capable of being controlled via an external analog signal within programmed speed minimum and maximum speed range.
   c. Manual speed setting: Motor speed shall be controlled manually by operator changing speed via controller display.

H. Rotary-Screw VFD blower package’s drive system shall be Variable Frequency Drive as follows:

1. Blower drive system shall use 6-pulse, constant torque, AC variable frequency drive using pulse width modulation technology (PWM), integrally mounted and wired into blower package control cabinet and designed specifically for use with Synchronous Reluctance motors.
2. Blower drive shall consist of power module (frequency converter) and control unit. It shall be of Siemens SINAMICS converter family or approved equal.
3. VFD and motor combination to meet IES2 efficiency standard.
4. Blower drive shall "soft start" to allow for unlimited motor starts per hour.
5. Blower drive control and data input shall be via bus system from blower controller as sole and central operating unit and communication interface.
6. Blower drive shall come completely programmed and parametrized. An SD card slot shall be provided for updates.
7. Blower drive shall have an integrated DC link reactor. DC link reactor shall smooth voltage peaks, bridge commutation gaps and reduce effects of harmonics on inverter and line supply.
8. Blower drive shall include class A noise suppression line (RFI) filter either integrated to power module or preinstalled and wired between power feed and power module.
9. Blower drive shall be protected from Electro Magnetic Interference by utilizing shielded motor connection cables.

I. Blower Package Accessories:
   1. Safety Relief Valve
      a. Relief valve(s) shall be factory installed within sound enclosure. Relief valve may not be shipped loose for field installation in discharge piping.
      b. Relief valve(s) shall be spring type and must be sized for 100% of design flow specified. Weighted relief valves shall not be used.
      c. Relief valve(s) shall be set to protect blower from excessive differential pressure based on design conditions specified. Seal shall be affixed that must be broken if set point is changed.
      d. Relief valve(s) exhaust shall be vented out of sound enclosure. Exhaust vented into sound enclosure shall not be allowed.
      e. Relief valve shall be ASME Section IIIV, UV, CE, and PED certified.
      f. Relief valve shall be manufactured by Kunkle or an approved equal.
   2. Check Valve:
      a. Check valve to prevent back flow through blower shall be factory installed and not shipped loose for field installation in discharge piping.
      b. Check valve flapper shall be swing type made from steel disc embedded in high temperature silicone elastomer. Valve shall be designed so that, in event of failure, valve element is retained in valve housing. Split disc or center hinged designs shall not be used.
      c. Check valve capacity shall exceed blower package's design flow at maximum discharge pressure and temperature.
   3. Flexible Connector :
      a. An elastomeric compensator/flex connector shall be provided to isolate connection of blower package to self-supporting system piping. Control rods which may lead to nozzle loading shall not be used.
      b. Flexible connector capacity shall exceed blower package's maximum discharge pressure and temperature.
      c. Discharge connection shall be provided with web reinforced rubber sleeve with corrosion resistant clamps.

d. Piped Inlet connection – when required by this specification, shall be provided with web reinforced silicone rubber sleeve with corrosion resistant clamps.

4. Oil Drains:
   a. An oil drain from blower drive-end and gear-end lubricating oil sumps shall be separately piped to front of blower base with flexible tubing. Common fill and drain shall not be allowed.
   b. Each oil drain shall include drain valve installed for ease of maintenance. Drain valves shall be 90° stainless steel ball valves and include fully retained gasketed and threaded cap to prevent accidental discharge of blower lubricant.

5. Vibration Isolators:
   a. Vibration isolators shall be provided between discharge silencer and sound enclosure skid to prevent transmission of vibration to foundation.
   b. A ground wire shall be installed between blower base and sound enclosure base to allow for grounding of complete blower package.

6. Inlet and Discharge Pressure Transducer:
   a. Pressure transducers shall be installed on inlet and discharge of blower and shall be monitored by controller and displayed on controller operator panel.
   b. Transducers shall have the following range:
      1) 0 to -17.4 PSIG (inlet)
      2) 0 to 17.4 PSIG (discharge)
   c. Transducers shall have sensor made of Ceramic aluminum oxide.
   d. Transducers shall have an output signal of 4…20mA.

7. Inlet and Discharge Temperature Sensor:
   a. Temperature sensors shall be installed on inlet and discharge of blower and shall be monitored by controller and displayed on controller operator panel.
   b. Sensors shall have temperature range of -58ºF to 392ºF.
   c. Sensors shall have thermowell made of brass.
   d. Sensors shall have measure element of Pt100.

8. Enclosure Temperature Sensor:
   a. Blower package shall include an installed temperature sensor that measures temperature inside of blower package's enclosure and shall be monitored by controller and displayed on controller operator panel.
   b. Sensor shall monitor that enclosure of blower package operates within temperature range of 5ºF to 149ºF.
   c. Sensor shall have thermowell made of stainless steel.
   d. Sensor shall have measure element of Pt100.

9. Oil Temperature Sensor:
   a. Blower shall include an installed oil temperature sensor in gear side oil sump (or blower discharge side) that shall be monitored by controller and be displayed on controller operator panel.
   b. Oil temperature sensor shall have temperature range of -58ºF to 482ºF
   c. Sensors shall have thermowell made of brass.
   d. Sensors shall have measure element of Pt100.

10. Oil Level Switch:
    a. Blower shall include installed oil level switches, one for each oil sump that shall be monitored by controller and be displayed on controller operator panel.

b. Oil level switch shall be preset for low oil condition.
c. Oil level switch shall be SPST switch, Voltage rating up to 250v, .5 A

11. Gear Chamber Aeration Demister System:
    a. Each air chamber shall be vented to atmosphere through an aeration demister system.
    b. Demister system will discharge into cabinet 99.98% oil free air.
    c. Any oil collected by demister system shall be automatically drained back into gear side blower oil sump.

12. Unloaded Start Valve (Not Required On Rotary-Screw VFD Blower Packages)
    a. Blower package when started on head of pressure shall include diaphragm operated, solenoid activate, mechanical unloaded start valve that is mounted between blower and discharge check valve.
    b. Unloaded start valve shall allow blower drive motor to accelerate unloaded up to full speed before discharge check valve opens.

J. Nameplates: Blower package shall have at least two weatherproof corrosion resistant type nameplates which includes manufacturer name, model number, year, max pressure difference, equipment number, part number, serial number, voltage, phase, HP, motor rpm, and rated temperature attached on outside and inside of blower package.

K. Anchor Bolts and Hardware: Anchor bolts, washers, hex nuts, and all other fastening hardware shall be stainless steel and be supplied by Contractor.

L. Paint Specification:
1. Blower manufacturer is responsible for surface preparation, priming and finish coating of blower package and components requiring paint in accordance with manufacture's standard procedures. Field painting of blower equipment or supplying components that are only prime painted is not acceptable.
    a. Cast parts are to be painted with two-part gray epoxy primer and two-part top coat.
    b. Fabricated parts are to be painted with two-part gray epoxy primer and two-part top coat.
    c. Sound enclosure parts are to be powder coated.
        1) Panels and base paint finish shall be pretreated by de-greasing and phosphate cleaning, then powder coated to thickness of 70 µm -100 µm on both sides.

2. Blower package to be painted blower manufacturer's standard colors.

PART 3 - EXECUTION

3.01 INSPECTION

A. Contractor shall verify that structures, pipes and equipment are compatible.

B. Make adjustments required to place system in proper operating condition.

3.02 INSTALLATION

A. Manufacturer's representative shall check and approve installation prior to operation. Manufacturer's representative shall field test and calibrate equipment to assure that system operates to Owner's satisfaction.

3.03 FIELD QUALITY CONTROL

A. Field Test:

1. After Contractor and Engineer have mutually agreed that equipment installation is complete Contractor and qualified field service representative of manufacturer shall conduct running test and sound test of blowers and controls in presence of Engineer to demonstrate that each blower and its controls will function correctly, and that sound levels do not exceed maximum limits.
    a. Running Tests:
        1) All blower units together with their controls shall be field tested. Tests shall demonstrate to Engineer that each part and all parts together function in manner intended. All necessary testing equipment and manpower shall be provided by Contractor.
        2) In event that manufacturer is unable to demonstrate that equipment meets requirements of tests, Contractor shall adjust, modify and retest equipment as often as necessary in order to meet specified requirements.

    b. Sound Tests:
        1) Perform an overall sound pressure level test on one blower of each size. Test results shall be rated in decibels in accordance with ANSI S5.1.
        2) Take overall sound pressure level at points evenly spaced around blower and motor assembly and at 5’ from nearest part of units. Sound level shall not exceed 90 decibels at 5’ distance measured on A weighted scale.
        3) It is intent of this Section that complete unit as finally installed shall not exceed sound pressure level as specified herein. Manufacturer shall submit statement as to unit's conformance with this Section, whether remedial measures will be required, and if so, what remedial measures he proposes.
        4) Contractor shall provide all instruments, necessary labor, tools, and materials to conduct field tests.

B. A factory trained representative shall be provided for installation supervision, start-up and test services and operation and maintenance personnel training services. Representative shall make minimum of 1 visits, minimum 2 hours on-Site for each visit, to Site. First visit shall be for assistance in installation of equipment. Subsequent visits shall be for checking completed installation, start-up and training of system. Manufacturer's representative shall test operate system in presence of Engineer and verify that equipment conforms to requirements. Representative shall revisit Site as often as necessary until all trouble is corrected and installation is entirely satisfactory.

C. All costs, including travel, lodging, meals and incidentals, for additional visits shall be at no additional cost to Owner.

END OF SECTION

SECTION 43 20 01 - INLINE STATIC MIXERS

PART 1 - GENERAL

1.1 SUMMARY

A. Section Includes: Inline static mixers.

B. Related Requirements:
   1. Section 40 05 31 – PVC Pipe
   2. Section 40 05 07 – Hangers and Support for Process Piping

1.2 REFERENCE STANDARDS

A. ASTM International:
   1. ASTM D1784 - Standard Specification for Rigid Poly(Vinyl Chloride) (PVC) Compounds and Chlorinated Poly(Vinyl Chloride) (CPVC) Compounds.

B. National Science Foundation:
   1. NSF 61 - Drinking Water System Components - Health Effects.

1.3 SUBMITTALS

A. Section 01 33 00 - Submittal Procedures: Requirements for submittals.

B. Product Data: Submit manufacturer's product data for system materials and component equipment, including performance characteristics.

C. Shop Drawings:
   1. Indicate system materials and component equipment.

D. Manufacturer's Certificate: Certify that all components used in flanged PVC static mixers (including internals) are NSF-61 certified (with the exception of 316 SS non-moving parts.
   1. Certify installation is completed according to manufacturer's instructions and that screens or mixing blades have been properly installed and tested and are ready for operation.

E. Manufacturer's Instructions: Submit detailed instructions on installation requirements, including storage and handling procedures.

F. Field Quality-Control Submittals: Indicate results of Contractor-furnished tests and inspections.

1.4 QUALITY ASSURANCE

A. Provide piping, tubes, equipment, and appurtenances in contact with potable water, complying with NSF 61.

B. Perform Work according to State of Alaska and EPA standards for public drinking water systems.

1.5 QUALIFICATIONS

A. Manufacturer: Company specializing in manufacturing products specified in this Section with minimum five years of documented experience in the manufacture of in-line static mixers with PVC bodies.

1.6 DELIVERY, STORAGE, AND HANDLING

A. Section 016000 - Product Requirements: Requirements for transporting, handling, storing, and protecting products.

B. Deliver materials in manufacturer's packaging including application instructions.

C. Inspection: Accept mixers on-Site in original packaging. Inspect for damage.

D. Store mixers according to manufacturer's instructions.

E. Protect mixers from water and wet weather.

1.7 EXISTING CONDITIONS

A. Field Measurements: Verify field measurements prior to fabrication. Indicate field measurements on Shop Drawings.

1.8 WARRANTY

A. Section 017000 - Execution and Closeout Requirements: Requirements for warranties.

PART 2 - PRODUCTS

2.1 INLINE STATIC MIXERS

A. Manufacturers:
   1. Pre-approved manufacturers are:
      a. KoFlo
      b. Sulzer
   2. Engineer approved equal.

B. Description: Fixed arrangement of stationary baffles enclosed in a pipeline.
   1. Pipe Diameter: 14 inch
   2. Number of Elements: 2
   3. Length: per manufacturer
   4. Maximum working pressure at 75 degrees F: 20 psig.
   5. Nominal Flow Rate: 700 gpm
   6. Pressure Loss: < 2 ftH_2O

2.2 MATERIALS

A. Housing:
   1. PVC: ASTM D1784; Schedule 80

B. Elements:
   1. PVC: ASTM D1784.
   2. CPVC: ASTM D1784.
   3. Stainless Steel: Type 316L
   4. Polyvinylidene Fluoride (Kynar): ASTM D3222.
   5. PTFE: ASTM D1710.

C. Connections:
   1. PVC: According to Section 400531 – PVC Pipe.

2.3 ACCESSORIES

A. Chemical Injection Port: Female threaded.

B. Chemical Injection Port Quantity: as shown on process and instrument diagrams

PART 3 - EXECUTION

3.1 EXAMINATION

A. Verify layout, type, and orientation of piping connections.

3.2 INSTALLATION

A. Install equipment according to manufacturer's written instructions.

3.3 FIELD QUALITY CONTROL

A. Section 01 45 00 - Quality Control

END OF SECTION

SECTION 43 23 01 – HIGH SERVICE PUMPS

PART 1 - GENERAL

1.1 WORK INCLUDED

A. Packaged Pumping System with variable speed drives for High Service Pumping application (pumping from clearwell to potable water storage).

1.2 REFERENCE STANDARDS

The requirements of portions of the following standards apply to work in this section:

A. Hydraulic Institute

B. ANSI – American National Standards Institute

C. ASTM – American Society for Testing and Materials

D. IEEE – Institute of Electrical and Electronics Engineers

E. NEMA – National Electrical Manufacturers Association

F. NEC – National Electrical Code

G. ISO – International Standards Organization

H. UL – Underwriters Laboratories, Inc.

PART 2 - PRODUCTS

2.1 VARIABLE SPEED PACKAGED PUMPING SYSTEM

A. Furnish and install a pre-fabricated and tested variable speed packaged pumping system to maintain water level in the Potable Water Storage Tanks.

B. The packaged pump system shall be a standard product of a single pump manufacturer. The entire pump system including pumps and pump logic controller, shall be designed, built, and tested by the same manufacturer.

C. The complete packaged water booster pump system shall be certified and listed by UL (Category QCZJ – Packaged Pumping Systems) for conformance to U.S. Standards.

D. The complete packaged pumping system shall be NSF61 / NSF372 Listed for drinking water and low lead requirements.

E. The packaged pump system shall include both suction header and discharge header pressure transmitters as well as provision for remote input from SCADA for speed control.

2.2 PUMPS

A. All pumps shall be ANSI NSF 61 / NSF372 Listed for drinking water and low lead requirements.

B. The pumps shall be of the in-line vertical multi-stage design.

C. The head-capacity curve shall have a steady rise in head from maximum to minimum flow within the preferred operating region. The shut-off head shall be a minimum of 20% higher than the head at the best efficiency point.

D. In-line Vertical Multi-Stage Pumps shall have the following features:

1. Design point for High Service Pumps (P-401A/B/C): 790 gpm @ 111ft TDH (40 Hp VFD rated motors).
2. The pump impellers shall be secured directly to the smooth pump shaft by means of a split cone and nut design.
3. The suction/discharge base shall have ANSI Class 125 or Class 250 flange connections in a slip ring (rotating flange) design as indicated in the drawings or pump schedule.
4. Pump Construction:

a. Suction/discharge base, pump head	Ductile Iron (ASTM 65-45-12)
b. Shaft couplings, flange rings:	Ductile Iron (ASTM 65-45-12)
b. Shaft	431 Stainless Steel
c. Motor Stool	Cast Iron (ASTM Class 30)
d. Impellers, diffuser chambers, outer sleeve:	304 Stainless Steel
e. Impeller wear rings:	304 Stainless Steel
f. Intermediate Bearing Journals:	Silicon Carbide
g. Intermediate Chamber Bearings:	Leadless Tin Bronze
h. Chamber Bushings:	Graphite Filled PTFE
I. O-rings:	EPDM

5. The shaft seal shall be a balanced o-ring cartridge type with the following features:

a. Collar, Drivers, Spring:	316 Stainless Steel
b. Shaft Sleeve, Gland Plate:	316 Stainless Steel
c. Stationary Ring:	Silicon Carbide
d. Rotating Ring:	Silicon Carbide
e. O-rings:	EPDM

   The Silicon Carbide shall be imbedded with graphite.

6. Shaft seal replacement shall be possible without removal of any pump components other than the coupling guard, motor couplings, motor and seal cover. The entire cartridge shaft seal shall be removable as a one-piece component. Pumps with motors equal to or larger than 15 hp (fifteen horsepower) shall have adequate space within the motor stool so that shaft seal replacement is possible without motor removal.

2.3 VARIABLE FREQUENCY DRIVES

A. See Section 26 29 23. Where conflicts exist between this section and Section 26 29 23, the more stringent shall apply.

B. VFD to be provided with the following interface features:

1. VFD shall provide an alphanumeric backlit display keypad, which may be remotely mounted using standard 9-pin cable. VFD may be operated with keypad disconnected or removed entirely. Keypad may be disconnected during normal operation without the need to stop the motor or disconnect power to the VFD.
2. VFD shall display all faults in plain text; VFD's, which can display only fault codes, are not acceptable.
3. All VFD's shall be of the same series, and shall utilize a common control card and LCP (keypad/display unit) throughout the rating range. The control cards and keypads shall be interchangeable through the entire range of drives used on the project.
4. VFD keypad shall be capable of storing drive parameter values in non-volatile RAM uploaded to it from the VFD, and shall be capable of downloading stored values to the VFD

to facilitate programming of multiple drives in similar applications, or as a means of backing up the programmed parameters.

5. A red FAULT light, a yellow WARNING light and a green POWER-ON light shall be provided. These indications shall be visible both on the keypad and on the VFD when the keypad is removed.
6. A start guide menu with factory preset typical parameters shall be provided on the VFD to facilitate commissioning.
7. VFD shall provide full galvanic isolation with suitable potential separation from the power sources (control, signal, and power circuitry within the drive) to ensure compliance with PELV requirements and to protect PLC's and other connected equipment from power surges and spikes.
8. All inputs and outputs shall be optically isolated. Isolation boards between the VFD and external control devices shall not be required.
9. There shall be three programmable digital inputs for interfacing with the systems external control and safety interlock circuitry. An additional digital input is preprogrammed for start/stop.
10. The VFD shall have two analog signal inputs. One dedicated for sensor input and one for external set point input.
11. One programmable analog output shall be provided for indication of a drive status.
12. The VFD shall provide two user programmable relays with selectable functions. Two form 'C' 230VAC/2A rated dry contact relay outputs shall be provided.
13. The VFD shall store in memory the last 5 faults with time stamp and recorded data.
14. The VFD shall be equipped with a standard RS-485 serial communications port for communication to the multi-pump controller. The bus communication protocol for the VFD shall be the same as the controller protocol.

C. VFD service conditions:

1. Ambient temperature operating range, -10 to 45ºC (14 to 113°F) Continuous; 50 ºC max temperature Intermittent.
2. 0 to 100% relative humidity, non-condensing.
3. Elevation to 1000 meters (3,300 feet) without derating.
4. VFD's shall be rated for line voltage of 525 to 690VAC, 380 to 480VAC, or 200 to 240VAC; with +10% to -15% variations. Line frequency variation of ± 2% shall be acceptable.
5. No side clearance shall be required for cooling of the units.

2.4 PUMP SYSTEM CONTROLLER

A. The pump system controller shall be a standard product developed and supported by the pump manufacturer.

B. The controller shall be microprocessor based capable of having software changes and updates via personal computer (notebook). The controller user interface shall have a color display with a minimum screen size of 3-1/2" x 4-5/8" for easy viewing of system status parameters and for field programming. The display shall have a back light with contrast adjustment. Password protection of system settings shall be standard.

C. Galvanic Isolation: The controller shall provide internal galvanic isolation to all digital and analog inputs as well as all fieldbus connections.

D. Backup Battery: The controller shall have the ability to be connected to a backup battery to supply power to the controller during periods of loss of supply power.

E. Home Status Screen: The controller shall display the following as status readings from a single display on the controller (this display shall be the default):

- Current value of the control parameter, (typically differential pressure)
- Most recent existing alarm (if any)
- System status with current operating mode
- Status of each pump with current operating mode and rotational speed as a percentage (%)
- Estimated flow-rate, (or actual flow if flow sensor is used)
- One user defined measured parameter (i.e. power consumption)

F. Inputs/Outputs: The controller shall have as a minimum the following hardware inputs and outputs:

- Three analog inputs (4-20mA or 0-10VDC)
- Three digital inputs
- Two digital outputs
- Ethernet connection (built-in web server)
- Field Service connection to PC for advanced programming, software and/or firmware upgrades and data logging

G. Pump system programming: As a minimum, the following parameters shall be available and/or field adjustable:

- Sensor Settings: Suction, Discharge, Differential Pressure [analog supply/range]
- PI Controller: Proportional gain (Kp) and Integral time (Ti)
- Low suction: Pressure/level shutdown via digital contact
- Limit Exceeding function: For low system, low suction warnings and shut down [via analog input]
- Flow meter settings (if used, analog signal)

H. Pump Curve Data: The actual pump performance curves (5th order polynomial) shall be loaded (software) into the pump system controller. Pump curve data shall be used for the following:

a. Display and data logging of calculated flow rate
b. Variable pressure control (quadratic or proportional)
c. Pump outside of duty range protection
d. Sequence pumps based on efficiency

I. Variable Pressure Control: The controller shall have variable pressure control to compensate for pipe friction loss by decreasing the pressure set-point at lower flow-rates and increasing the pressure set-point at higher flow-rates by using the actual flow rate or calculated flow rate. Variable pressure control that uses power consumption and speed only shall not be considered equal to variable pressure control that uses actual differential pressure measurement along with pump power and speed.

J. Multi-Sensor: The controller shall be able to control using up to six differential pressure (DP) sensors (zones). Each zone shall have a programmable maximum and minimum DP range. The controller shall be capable of an energy optimal mode where pump speed/energy shall be reduced until any of the zones reach the minimum DP setting.

K. Check Valve Failure Detection (Systems with integrated VFD motors): The system controller shall be able to detect motors turning in the opposite direction and give check valve failure notification.

1. For minor leaks the pump shall start with a warning indicated
2. For major leaks the pump shall remain off to prevent damage with an alarm indication

L. DP Subtraction: The system controller shall be able to control off subtraction of two pressure or temperature sensors for differential pressure or differential temperature control.

M. Programmable Setpoints: The system controller shall be able to accept up to seven programmable set-points via a digital input, (additional input/output module may be required).

N. Setpoint Influence: The system pressure set-point shall be capable of being automatically adjusted by using an external set-point influence. The set-point influence function enables the user to adjust the control parameter (typically differential pressure) by measuring an additional parameter. (Example: Lower the system differential pressure set-point based on a flow or outdoor temperature measurement).

O. Remote Control: The controller shall be capable of receiving a remote analog set-point (4-20mA or 0-10 VDC) as well as a remote system on/off (digital) signal.

P. Setpoint Ramp: The controller shall be able to adjust the ramp time of a change in set point (increase and decrease).

Q. Warnings and Alarms: The pump system controller shall store up to 24 warnings and alarms in memory. The time, date and duration of each alarm shall be recorded. A potential-free relay shall be provided for alarm notification to the building management system. The controller shall display the following alarm conditions:

Individual pump failure	Check valve failure
VFD trip/failure	Loss of sensor signal (4-20 mA)
Loss of remote set-point signal (4-20mA)	External Fault
Pump outside of duty range	Limit 1 and 2 exceeded*

*The controller shall be capable of monitoring two analog signals (i.e. suction pressure and discharge pressure) for additional pump or system protection.

R. Built-in data log: The controller shall have built-in data logging capability. Logged values shall be graphically displayed on the controller and shall be downloadable to a notebook/pc as a delimited text file. A minimum of 7200 samples per logged value shall be available for the following parameters:

- Estimated flow-rate (or actual flow if flow sensor is connected)
- Speed of pumps
- Process Value/sensor feedback (usually differential pressure)
- Power consumption
- Controlling parameter (setpoint)
- Inlet pressure (when remote differential pressure is the primary sensor)

S. Redundant Primary Sensor: The controller shall be capable of receiving a redundant sensor input to function as a backup to the primary sensor.

T. Secondary Sensor: Upon loss of signal from the remote sensor, the controller shall be capable of reverting control to the pump system mounted sensors with a programmable setpoint. The pumps shall maintain a constant, proportional or quadratic pressure across the system until the remote setpoint signal is restored.

U. Pump Test: The controller shall have a pump "Test Run" feature such that pumps are switched on during periods of inactivity (system is switched to the "off" position but with electricity supply still connected). The inoperative pumps shall be switched on for a period of three to four seconds every 24 hours, 48 hours or once per week and at a programmable time of day.

V. Reduced Operation: During backup generator operation, the controller shall be capable of reducing the power consumed by the pump system by either limiting the number of pumps in operation or by limiting the amount of power consumption (kW). The controller shall receive a digital input indicating backup generator operation.

W. Power and Energy Consumption: The controller shall be capable of displaying instantaneous power consumption (Watts or kilowatts) and cumulative energy consumption (kilowatt-hours).

X. Specific Energy: When a flow sensor is connected, the controller shall be capable of displaying instantaneous specific energy in Watt-hours per gallon (Wh/gal) or Watt-hours per 1,000 gallons (Wh/kgal).

Y. Built-in Ethernet: The controller shall have an Ethernet connection with a built-in web server allowing for connection to a building computer network with read/write access to the controller via a web browser.

Z. Service Contact Information: The controller shall have a programmable Service Contact Field that can be populated with service contact information including: contact name, address, phone number(s) and website.

2.5 CONTROL PANEL

SCCR: The complete control panel assembly shall have a Short Circuit Current Rating of 100 kA

BMS Integration: Standard shall be BACnet MS/TP *Other protocols available: BACnet IP, Ethernet IP, Modbus RTU, Modbus TCP, LON

The pump system controller shall be mounted in a UL Type 3R rated enclosure. A self-certified NEMA enclosure rating shall not be considered equal. The entire UL Type 3R control panel shall be UL 508 listed as an assembly. The control panel shall include a main disconnect, circuit breakers for each pump and the control circuit and control relays for alarm functions. The control panel shall include the following:

- 80 dB System Fault Audible Alarm with push button to silence
- Emergency/Normal Operation Switches (Control bypass)
- Individual Service Disconnect Switches (accessible outside of panel)
- Pump Run Lights
- System Fault Light
- Surge Arrestor

2.6 SEQUENCE OF OPERATION

The system controller shall operate equal capacity variable speed pumps to maintain a constant discharge pressure or tank level (system set-point from remote SCADA). The system controller shall receive an analog signal [4-20mA] from the factory installed pressure transducer on the discharge and suction manifolds, indicating the actual system pressure and inlet pressure. The controller shall be capable of controlling off the subtraction of discharge minus suction transducers for differential pressure across the manifolds.

A. Standard Cascade Control (Pumping Efficiency Based):
The pump system controller shall adjust pump speed as necessary to maintain system set-point pressure as flow demand increases. Utilizing the pump curve information (5th order polynomial), the pump system controller shall stage on additional pumps when pump hydraulic efficiency will be higher with additional pumps in operation. Exception: When the flow and head are outside the operating pump(s) allowable operating range the controller shall switch on an additional pump thus distributing flow and allowing all pump(s) to operate in allowable operating range. When the system pressure is equal to the system set-point, all pumps in operation shall reach equal operating speeds. The pump system controller shall have field adjustable Proportional Gain and Integral time (PI) settings for system optimization.

Optional Cascade Control (Pump Start Speed Based):
As flow demand increases the pump speed shall be increased to maintain the system set-point pressure. When the operating pump(s) reach 96% of full speed (adjustable), an additional pump will be started and will increase speed until the system set-point is achieved. When the system pressure is equal to the system set-point all pumps in operation shall reach equal operating speeds. The pump system controller shall have field adjustable Proportional Gain and Integral time (PI) settings for system optimization.

B. The system controller shall be capable of switching pumps on and off to satisfy system demand without the use of flow switches, motor current monitors or temperature measuring devices.

C. All pumps in the system shall alternate automatically based on demand, time and fault. If flow demand is continuous (no flow shut-down does not occur), the system controller shall have the capability to alternate the pumps every 24 hours, every 48 hours or once per week. The interval and actual time of the pump change-over shall be field adjustable.

2.8 LOW FLOW STOP FUNCTION (Constant Pressure Applications)

The system controller shall be capable of stopping pumps during periods of low-flow or zero-flow without wasting water or adding unwanted heat to the liquid. Temperature based no flow shut-down methods that have the potential to waste water and add unwanted temperature rise to the pumping fluid are not acceptable and shall not be used.

When only one pump is in operation the system controller shall be capable of detecting low flow (less than 10% of pump nominal flow) with the use of an external flow meter via the plant SCADA system. When a low flow is detected, the system controller shall stop the pump even if the setpoint is below target. The pump shall remain off until the discharge pressure reaches the start pressure (system set-point minus 50% of programmed on/off band, adjustable). Upon low flow shut-down a pump shall be restarted in one of the following two ways:

A. Low Flow Restart: If the low flow condition still exists, the pump shall start and the speed shall again be increased until the stop pressure is reached and the pump shall again be switched off.

B. Normal Flow Restart: If the pump system controller determines a low flow condition no longer exists the pump shall start and the speed shall be increased until the system pressure reaches the system set-point.

2.9 SYSTEM CONSTRUCTION

A. Suction and discharge manifold construction shall be in way that ensures minimal pressure drops, minimize potential for corrosion, and prevents bacteria growth at intersection of piping into the manifold. Manifold construction that includes sharp edge transitions or interconnecting piping protruding into manifold is not acceptable. Manifold construction shall be such that water stagnation cannot exist in manifold during operation to prevent bacteria growth inside manifold.

B. The suction and discharge manifolds material shall be 316 stainless steel. Manifold connection sizes shall be as follows:

3 inch and smaller:	Male NPT threaded
4 inch through 8 inch:	ANSI Class 150 rotating flanges
10 inch and larger:	ANSI Class 150 flanges

C. Pump Isolation valves shall be provided on the suction and discharge of each pump. Isolation valve sizes 2 inch and smaller shall be nickel plated brass full port ball valves. Isolation valve sizes 3 inch and larger shall be a full lug style butterfly valve. The valve disk shall be of stainless steel. The valve seat material shall be EPDM and the body shall be cast iron, coated internally and externally with fusion-bonded epoxy.

D. A spring-loaded non-slam type check valve shall be installed on the discharge of each pump. The valve shall be a wafer style type fitted between two flanges. The head loss through the check valve shall not exceed 5 psi at the pump design capacity. Check valves 1-1/2” and smaller shall have a POM composite body and poppet, a stainless-steel spring with EPDM or NBR seats. Check valves 2” and larger shall have a body material of stainless steel or epoxy coated iron (fusion bonded) with an EPDM or NBR resilient seat. Spring material shall be stainless steel. Disk shall be of stainless steel or leadless bronze.

E. For systems that require a diaphragm tank, a connection of no smaller than ¾” shall be provided on the discharge manifold.

F. A pressure transducer shall be factory installed on the discharge manifold (or field installed as specified on plans). Systems with positive inlet gauge pressure shall have a factory installed pressure transducer on the suction manifold for water shortage protection. Pressure transducers shall be made of 316 stainless steel. Transducer accuracy shall be +/- 1.0% full scale with hysteresis and repeatability of no greater than 0.1% full scale. The output signal shall be 4-20 mA with a supply voltage range of 9-32 VDC.

G. A bourdon tube pressure gauge, 2.5 inch diameter, shall be placed on the suction and discharge manifolds. The gauge shall be liquid filled and have copper alloy internal parts in a stainless steel case. Gauge accuracy shall be 2/1/2 %. The gauge shall be capable of a pressure of 30% above its maximum span without requiring recalibration.

H. Systems with a flooded suction inlet or suction lift configuration shall have a factory installed water shortage protection device on the suction manifold.

I. The base frame shall be constructed of corrosion resistant 304 stainless steel for systems with CR pump sizes up to CR64. The pump system base shall be powder coated white aluminum RAL9006, carbon steel ASTM A36 structural steel, for systems with CR95 and larger pumps.

J. Rubber vibration dampeners shall be fitted between each pumps and base frame to minimize vibration.

K. Depending on the system size and configuration, the control panel shall be mounted in one of the following ways:

- On a 304 stainless steel fabricated control cabinet stand attached to the system skid.
- On a 304 stainless steel fabricated skid, separate from the main system skid
- On its own base (floor mounted with plinth)

PART 3 - EXECUTION

3.10 TESTING

A. The tester used for testing the pump system shall be constructed and calibrated according to the requirements of hydraulic test standard ISO 9906.

B. The entire pump station shall as a minimum be factory tested for functionality and documented results of functionality test supplied with pump station.

Functionality testing shall include the following parameters:

1. Complete System Hydrostatic Test – 1.5 times the nameplate maximum pressure
2. No-Flow Detection Shutoff Test
3. Water Shortage Test
4. Two-Point Setpoint Performance Test.

C. Water used for testing shall be treated with three different filtration systems to ensure only clean water is used for testing pump station.

1. 25 micron mechanical filter – removes solid parts from water
2. Activated carbon filter – keeps water clear and eliminates odor
3. Ultraviolet light system – kills all bacteria growth

D. Optional performance testing shall include:

1. 10-Point Verified Performance Test

3.11 WARRANTY

A. The warranty period shall be a non-prorated period of 24 months from date of installation, not to exceed 30 months from date of manufacture.

END OF SECTION

SECTION 43 30 01 – SUBMERSIBLE PUMP AND JET MIXING SYSTEM

PART 1 - GENERAL

1.1. SCOPE OF WORK

A. The work in this section shall include furnishing and placing into operation two submersible pump and jet mixer assemblies as shown on the drawings. The pumps shall be complete with venturi style mixer nozzles, discharge connections, lifting chains and guide bars as specified herein and as indicated on the drawings.

1.2. RELATED SECTIONS

A. Section 40 05 06 Couplings, Adapters, and Specials for Process Piping

B. Section 40 05 07 Hangers and Support for Process Piping

C. Section 26 00 00 Electrical Work, General

D. Section 26 05 05 Electric Motors

E. Section 26 05 19 Wire and Cables

1.3. REFERENCES

A. American Society for testing and material (ASTM) International
   1. A 48: Standard Specification for Gray Iron Castings.
   2. A743: Standard Specification Iron-Chromium Nickel, Corrosion Resistant,

B: American National Standards Institute (ANSI):
   1. B16.1: Standard for Cast Iron Pipe Flanges and Flanged Fittings, 125 lb.

C. Hydraulic Institute: Current Standards.
   1. HI 14.6: Hydrodynamic Pumps for Hydraulic Performance Acceptance Tests.
   2. HI 11.6: Submersible Pump Tests

1.4. SUBMITTALS

A. Submittal data shall be provided to show compliance with these specifications, plans or other specifications that will influence the proper operation of the pump(s).

B. Standard submittal data for approval must consist of:
   1. Pump Performance Curves.
   2. Pump Outline Drawing.
   3. Station Drawing for Accessories.
   4. Electrical Motor Data.
   5. Typical Installation Guides.
   6. Technical Manuals and Parts List.
   8. Printed Warranty.
   9. Management system certificate ISO 9001.
   10. Manufacturer's Equipment Storage Recommendations.
   11. Manufacturer's Standard Recommended Start-Up Report Form.

C. Lack of the above requested submittal data is cause for rejection.

1.5. QUALIFICATION REQUIREMENTS

A. The Contractor shall provide data on equipment manufacturer's experience. Only Manufacturers with 15 or more years of experience who have furnished at least 5 similar systems shall be considered.

B. After installation, a pump station start-up shall be performed by the installing contractor under the supervision of the manufacturer's authorized representative. 8 hours of field service shall be provided by an authorized, factory trained representative of the pump manufacturer. Services shall include, but not be limited to, inspection of the completed pump station installation to ensure that it has been performed in accordance with the manufacturer's instructions and recommendations, supervision of all field-testing and activation of the Pump Manufacturer's Warranty. The test shall demonstrate to the satisfaction of the Owner that the equipment meets all specified performance criteria, is properly installed and anchored, and operates smoothly without exceeding the full load amperage rating of the motor. The Contractor shall be responsible for coordinating the required field services with the Pump Manufacturer.

1.6. OPERATIONAL REQUIREMENTS AND WARRANTY

A. The contractor shall supply and install two submersible pumps with discharge connections, discharge pipes, guide bars, cable holder lifting chains.

B. The submersible pumps shall have a semi open multi vane self-cleaning impeller designed to transport wastewater with fibrous materials.

C. The impeller shall be wear resistant and made of high chromium cast iron with at least 24% chrome against sand and grit which is expected to enter the pump station with water treatment plant backwash water. Impellers that have surface hardening (by thermal, coating, etc.) will not be allowed.

D. The pumps shall be provided with prorated 60 months (5 years) warranty against defects in materials and or workmanship. Unless otherwise specified, all other equipment shall be warrantied for 12 months (1 year). The warranty shall be in printed form and previously published as the manufacturer's standard warranty for all similar units manufactured, latest revision. Upon warranty occurrence, the manufacturer's authorized service center shall remove the pump, repair, reinstall and provide start up on the repaired pump. A detailed failure analysis shall be submitted to the Owner for their records summarizing corrective action taken.

E. The manufacturer shall guarantee clog-free operation for a period of 24 months from the date of start-up of the pumps by the local authorized factory representative. A certificate shall be provided to the Owner on the day of start up with the local contact information and effective date. If the impeller clogs with typical solids or modern trash debris normally found in domestic wastewater during this period, an authorized representative shall travel to the jobsite, remove the pump, clear the obstruction and reinstall the pump at no cost for the Owner. A written report shall be provided to the Owner detailing the service call with pictures for verification purposes.

PART 2 - PRODUCTS

2.1. SUBMERSIBLE PUMPS

A. The backwash equalization basin shall be equipped with one submersible, close-coupled wastewater pumps per side for a total of two pumps.

B. Each pump shall be equipped with a 5 Hp submersible electric motor, capable to operate on a 460 volt, 3 phase, 60 hertz voltage supply.

C. The pump shall be capable to operate without any limitation between 50% and 125% of the Best efficiency point (B.E.P) of the performance curve.

D. The required shaft power (P2) in the guaranteed duty point shall be less than 5 HP. The motor speed shall be max.: 3,600 rpm. A performance chart shall be provided upon request showing curves for torque, current, power factor, input/output HP and efficiency. This chart shall also include data on starting and no-load characteristics

E. The impeller shall be mounted on the motor shaft. Couplings shall not be accepted.

F. The pump motor shall be induction type with a squirrel cage rotor, shell type design, housed in an air filled, watertight chamber. It shall be permanently submersible according standard IEC 60034 and protection class IP 68.

G. The stator windings shall be insulated with moisture resistant Class H insulation rated for 356°F.

H. The motor shall be capable of no less than 30 evenly spaced starts per hour and be able to operate throughout the entire pump performance curve from shut-off through run-out even when the motor is not submerged

I. Sealing of the pumping unit to the discharge connection shall be accomplished by a machined metal to metal watertight contact. Sealing of the discharge interface with a diaphragm, O-ring or profile gasket will not be acceptable.

J. It shall be possible to lift and lower the pumps on parallel guide bars and connect them to wet well mounted discharge connection. There shall be no need for personal to enter the wet well when removing or reinstalling the pumps.

K. The junction chamber containing the terminal board shall be hermetically sealed from the motor by an elastomeric compression seal. Connection between the cable conductors and stator leads shall be made with threaded compression type binding posts permanently affixed to a terminal board. The motor and the pump shall be produced by the same manufacturer.

L. The motor shall be protected by 3 thermal switches embedded in the stator set to open at 260°F and one leakage sensor floating type located in the stator chamber. The sensor and the switches shall be connected to the control panel which shall stop the motor and send an alarm when the sensors are activated.

M. The cable entry shall consist of dual cylindrical elastomer sleeves, flanked by washers, all having a close tolerance fit against the cable and the cable entry. Epoxies, silicones, or other secondary sealing systems shall not be considered acceptable.

N. The pump shaft shall rotate on two bearings. Motor bearings shall be permanently grease lubricated and have a nominal L10 lifetime of 50.000 hours. The upper bearing shall be a single deep groove ball bearing. The lower bearing shall be a two-row angular contact bearing to compensate for axial thrust and radial forces. Single row lower bearings are not acceptable.

O. The shaft shall be sealed by a tandem mechanical shaft seal system consisting of two seals, each having an independent spring system. The seals shall require neither maintenance nor adjustment and shall be capable of operating in either clockwise or counterclockwise direction of rotation without damage or loss of seal function.

P. Each pump shall be provided with a lubricant chamber for the shaft sealing system. The lubricant chamber shall be designed to prevent overfilling and to provide lubricant expansion capacity. The drain and inspection plug, with positive anti-leak seal shall be easily accessible from the outside. The seal system shall not rely upon the pumped media for lubrication. Seal lubricant shall be non-hazardous.

Q. Where a seal cavity is present in the seal chamber, the area about the exterior of the lower mechanical seal in the cast iron housing shall have cast in an integral concentric spiral groove. This groove shall protect the seals by causing abrasive particulate entering the seal cavity to be forced out away from the seal due to centrifugal action

R. The Materials of construction shall be as follows:
   a. Pump housing: ASTM A-48, Class 35B
   b. Impeller and insert ring: A 532 ALLOY III A (25% Chrome)
   c. Stator housing: ASTM A-48, Class 35B
   d. Shaft: ASTM A479 S43100-T.
   e. Shaft seal: Pump side: - Corrosion resistant Tungsten carbide WCCR
   f. Shaft seal Motor side: - Carbon-Aluminum oxide (AL2O3)

S. All castings must be blasted before coating. All wet surfaces are to be coated with two-part oxyrane ester Duasolid 50. The total layer thickness should be at least 120 microns. Zink dust primer shall not be used.

T. The motor shall be equipped with 30 feet of screened cable suitable for submersible pump applications. The power cable shall be sized according to NEC and ICEA. The outer jacket of the cable shall be oil resistant chlorinated polyethylene rubber. The cable shall be capable of continuous submergence underwater without loss of watertight integrity to a depth of 65 feet.

U. Each completed and assembled pump/motor unit shall undergo the following factory tests at the manufacturer’s plant prior to shipment. The Manufacturer shall provide on demand a copy of his quality control plan for these tests and an ISO 9001 factory certificate:

a. Minimum 3-point hydraulic performance test
b. No-Leak seal integrity test
c. Electrical integrity test

2.2. EQUIPMENT FOR WET WELL INSTALLATION

A. For each pump the contractor shall supply and install a discharge connection made of cast iron ASTM A-48, Class 35B.

B. The outlet flange of the discharge connection shall be drilled according to ANSI B16.1-89; tab.5.

C. The pump(s) shall be automatically and firmly connected to the discharge connection, guided by no less than two parallel guide bars extending from the top of the station to the wet well mounted discharge connection. The material of the guide bars shall Stainless steel AISI 316.

D. The length of the guide bars shall 8 feet and they shall fasten at the top of the station with a guide bar holder made of Stainless steel AISI 316.

E. For each pump the contractor shall supply and install a cable holder made with 4 hooks of Stainless steel AISI 316.

F. There shall be no need for personnel to enter the wet-well.

G. The sealing of the pumping unit to the discharge connection shall be accomplished by a machined metal to metal contact. Sealing of the discharge interface with a diaphragm, O-ring or profile gasket will not be accepted. The entire weight of the pump/motor unit shall be borne by the pump discharge elbow. No portion of the pump/motor unit shall bear on the sump floor directly or on a sump floor mounted stand.

2.3. LIFTING EQUIPMENT FOR PUMPS

A. CONTRACTOR shall supply two (2) portable davit cranes for pump retrieval. The portable davit crane shall include a fixed pedestal base, a worm gear winch, 36 ft of ¼" stainless steel cable, and a rollerball bearing for smooth crane rotation.

B. Davit crane and associated components shall have a galvanized finish.

C. Each pump shall be fitted with 12 feet of stainless steel lifting chain or lifting cable. The working load of the lifting system shall be 50% greater than the pump unit weight in all crane orientations.

D. Pre-approved model is LK Goodwin Commander Series 5PT10G-M2.

2.4. SUBMERSIBLE CABLE CONNECTION BOX

A. The submersible cable of the pump shall be connected to the cable from the Control panel in a floor or wall mounted cable connection box to ease the installation and disassembling of the pumps and keep the submersible cables as short as possible.

B. The cable connection box shall be submersible NEMA 6P (IP 68) to secure that no water can enter the motor via the cables even when the complete area is flooded.

2.5. JET MIXER

A. The jet mixer shall be sized by the manufacturer to maintain solids from a water treatment plant filter backwash system and dissolved air floatation sludge in suspension. The mixer shall be a venturi style, ejector device fabricated of 316 SS.

B. Sizing and mixing nozzle orientation shall be for installation into a rectangular concrete tank as follows:

1. Two bays, each 16 feet wide by 24.5 feet long and 7.5 feet deep. Maximum liquid level expected is 6.5 feet.
2. The mixing system will be located at the south end of the two bays.
3. The north end of the two bays is a sump section that hydraulically connects the two. This section includes the drain and overflow piping. This section is approximately 33 feet wide, 2.5 feet long, and 10 feet deep, having its' floor 2.5 feet below the bays to be mixed.
4. Minimum liquid turnover is 2.5 volumes in 8 hours.
5. The location and orientation of the mixing system (nozzle direction) shall be verified with equipment vendor prior to purchase and installation. Mixing system shall be located and oriented to minimize solids deposition and prevent damage to the concrete basin walls.
6. Pre-Approved Manufacturer: Flygt JP 4710

PART 3 - EXECUTION

3.1. GENERAL

A. Perform installation in accordance with Contract Documents and manufacturers specifications.

3.2. EXAMINATION

A. A factory trained technician shall examine the work area prior to beginning work and check the following:

7. The environment is safe to begin working in
8. All surfaces are ready to receive work
9. All tools are in the proper location and are in good condition
10. Grounding of the system

3.3. FIELD QUALITY CONTROL

A. The follow field tests shall be performed by a factory trained technician

1. Point to point wiring verification
2. Utility power verification
3. Site acceptance testing
4. System demonstration

B. Point to Point I/O Verification

1. After installation of the pumps and the control panel, a factory trained technician shall prepare the I/O checklist. The checklist shall include the following:
    a. All inputs and outputs connected to the control panel
    b. All alarms that can be generated by the control panel

2. The technician shall follow a test procedure to test all I/O and alarms.
    a. All digital inputs shall be tested from point of origin unless it is unsafe.
    b. All digital outputs shall be tested by running a simulation test from the controller or by simulating the fault condition.
    c. All analog inputs shall be tested from the point of origin where possible and by use of a signal generator otherwise.
    d. All analog outputs shall be tested by running a simulation program or by forcing the output to a value.
3. The technician shall follow a test procedure to ensure the system operation parameters are met.

C. Configuration Verification

1. The factory trained technician shall document the settings using a factory provided configuration checklist. Each parameter shall be verified prior to the beginning of testing and then again after testing is completed.
2. The configuration of the pump station manager as well as the IPS gateways shall be documented.
3. The pump station manager configuration shall be saved to a factory provided SD card after testing is completed.

3.4. FACTORY TRAINED SUPERVISION

A. The contractor shall procure a factory trained technician to check over equipment prior to putting the equipment into operation.

B. Point to point test of all wiring.

C. Functional test of all equipment alarms and controls.

3.5. CERTIFICATION OF TESTING

A. All tests shall be performed in the presence of a duly authorized representative of the Owner. If the presence is waived, certified results shall be provided by the Contractor.

B. Written notice of all tests shall be given two weeks in advance.

3.6. TEST EQUIPMENT

A. All test equipment shall be provided by the Contractor.

3.7. TRAINING

A. Training shall be a minimum of four (4) hours and cover the complete Pumping System and related controls.

B. Instruction material shall be provided for four (4) trainees.

END OF SECTION

SECTION 46 07 13-13 – PACKAGED WATER TREATMENT PLANT EQUIPMENT INSTALLATION

PART 1 GENERAL

1.01 DESCRIPTION

A. Scope:
1. Provide all labor, materials, equipment and incidentals as shown, specified, and required to furnish and install Packaged Water Treatment Plant Equipment.
2. Included within Packaged Water Treatment Plant Equipment are 1 two stage rapid mixer and flow distribution box, three flocculation/dissolved air flotation (DAF) units and associated air saturator skids, two filter vessels containing three filters each, filter media, associated valves (see valve schedule), instrumentation and controls, variable frequency drives, electrical equipment, and appurtenances.
3. Extent of Packaged Water Treatment Plant Equipment is shown on contract drawings.
4. Field verify plan dimensions and elevations of Pre-Engineered Building and foundation including location of interior columns, trenches and other obstructions which may affect layout design of Packaged Water Treatment Plant.

B. Coordination:
1. Review installation procedures under this and other Sections and coordinate installation of items that must be installed with, or before Packaged Water Treatment Plant Equipment Work.
2. Notify other Contractors in advance of installation of fine bubble diffused aeration equipment to provide them with sufficient time for installation of items included in their contracts that must be installed with, or before, fine bubble diffused aeration equipment Work.

1.02 RELATED REQUIREMENTS

A. Section 09 90 00 - Painting and Coating.

B. Section 20 05 29 - Supports and Anchors for Facility Services Piping and Equipment.

1.03 QUALITY ASSURANCE

A. Qualifications:
1. Contractor shall have a minimum of five years experience in installation of substantially similar Packaged Water Treatment Plant Equipment or water and wastewater treatment equipment and shall be able to show evidence of at least five installations in satisfactory operation for at least five years.

1.04 DELIVERY, HANDLING, AND STORAGE

A. Packing, Shipping, Handling and Unloading:
1. Deliver materials to Site to ensure uninterrupted progress of Work. Deliver anchor bolts and anchorage devices which are to be embedded in cast-in-place concrete in ample time to prevent delay of that Work.
2. Contractor responsible for on/off loading and on-site transportation of equipment and assemblies.

B. Storage and Protection:
   1. Store materials to permit easy access for inspection and identification. Keep all material off ground, using pallets, platforms, or other supports. Protect steel members and packaged materials from corrosion and deterioration.
   2. Thermoplastic Items:
      a. Store thermoplastic pipe so as to prevent sagging or bending.
      b. Do not store thermoplastic pipe, fittings and specials in direct sunlight.
   3. Stainless Steel Items: Protect all stainless steel pipes, fittings and other items from contamination during shipment and storage.

C. Acceptance at Site: All boxes, crates and packages shall be inspected by Contractor upon delivery to Site. Contractor shall notify Engineer, in writing, if any loss or damage exists to equipment or components. Replace loss and repair damage to new condition in accordance with manufacturer's instructions.

PART 2 PRODUCTS

2.01 ANCHOR BOLTS

A. Provide anchor bolts for all packaged water treatment plant equipment. See Section 20 05 29 for requirements.

2.02 ISOLATION LAYER

A. Provide EPDM or other non-metallic corrosion resistant, non-absorbent layer between concrete foundation and marine grade aluminum process tankage to provide dielectric isolation between concrete and metallic surfaces.

PART 3 EXECUTION

3.01 INSPECTION

A. Verify that structures, pipes and equipment are compatible.

B. Make adjustments required to place system in proper operating condition.

3.02 INSTALLATION

A. Manufacturer’s representative shall check and approve installation prior to operation. Manufacturer’s representative shall field test and calibrate equipment to assure that system operates to Owner’s satisfaction.

B. Install all Water Treatment Equipment in accordance with manufacturer’s instructions and recommendations and approved Shop Drawings.

C. Use anti-seize compound for stainless steel nuts and bolts to prevent galling.

D. Mechanical:
   1. Scope of work includes all equipment and assemblies shown on reference drawing and documents, including but not limited to equipment and shipped loose piping, valves, instruments, etc.

2. Install and anchor all equipment on their foundation with required levelling and alignment.
3. Compressor shall be secured/anchored to concrete pad. Anchor design and supply by Contractor.
4. Ensure that isolating layer is installed underneath DAF and Filter tanks. Isolating layer can be EPDM or other non-metallic corrosion resistant, non-adsorbent layer to provide dielectric isolation between tank and concrete surface.
5. Prior to anchoring DAF and Filter Treatment tanks, all nozzle and tie-in points shall be checked for alignment.
6. All equipment shall be connected to relevant tie-in points in accordance with shop drawings.
7. All shipped loose items shall be installed in accordance with shop drawings.
8. Walkway sections and stairs shall be unloaded and assembled per shop drawings.
9. Filter media installation will be by Contractor. Note: Media installation shall be witnessed by Manufacturer representative. This is done as a part of pre-commissioning. Provide Manufacturer with adequate notice to mobilize on-site.

E. Electrical:
1. Before starting work, disconnect power and lock out power supply to all related rotating equipment associated with work area.
2. Supply (where required), install and terminate power cables as shown on E-13 and E-14. Refer to E-13 and E-14 for line types to identify required cable sizes.
3. Supply (where required), install and terminate instrument cables as shown on E-15, E-16, 17805-IC-SCD-001_R0_IFC, 17805-IC-SCD-101_R0_IFC, and 17805-IC-SCD-201_R0_IFC. Refer to the sheets previously mentioned for line types to identify required cable sizes.
4. Supply, install and terminate CAT-6 network cables as shown on IC-01 and 17805-IC-NET-001_RA_IFR. Refer to IC-01 and 17805-IC-NET-001_RA_IFR for line types to identify required cable sizes.
5. Once all mechanical work is completed, all wiring completed and contractor has submitted all QA/QC paperwork, unlock and energize power and support testing of installation as needed.

F. Offloading, Receipt, Storage, and Installation:
1. Sign-off of receiving documentation is considered as transfer of custody. Packing list is enclosed in packages for shipments of materials sent to Owner's Engineer. Owner's Engineer and/or Contractor is required to send a receiving acknowledgement notification to Manufacturer stating any overages, shortages, or damages within two days of receipt of materials. Photos should be taken of all damages and submitted as part of report. Any shipments that are received without notification will be deemed to have been received in full, with no damages or issues and subject to no further action.
2. Equipment custody shall be considered in mechanical Contractor's scope once equipment is handed over to mechanical Contractor and until completion of work and turnover to Owner. This includes, but not limited to storage, safekeeping, and preservation of equipment.
3. Contractor shall be responsible for receiving, unloading and safe storage of all equipment and loos-shipped items per relevant manufacturer's recommendations.
4. Prior to unloading, ensure all paths are clear and sufficient walking space is available to safely unload and place equipment.
5. Contractor shall remove all temporary transportation bracing/stiffeners if any.

6. Contractor shall clean and prepare all equipment mating surfaces and connections prior to installing equipment.
7. All necessary tools, tackles and rigging required for loading, installation and alignment of equipment shall be supplied by Contractor.
8. Contractor responsible for proper and safe disposal of any chemicals used and/or any other packaging materials.
9. Contractor shall supply and install shims and levelling plates as required to ensure all equipment is level. DAF tanks require uniform support on tank floor area. If shims are used to account for high or low sports on concrete foundation/housekeeping pad, photos shall be sent to Manufacturer for approval prior to completing final anchorage.
10. Contractor shall coordinate with designated crane company representative and Manufacturer Representative to develop rigging and lifting plans prior to arriving at site for each equipment.
11. Where Manufacturer standard packaged equipment is supplied, Contractor shall prepare and install listed equipment in accordance with manufacturer's installation, operation, and maintenance manuals.
12. Mechanical Contractor is responsible for installation of all loose ship items identified in packing list.
13. Contractor shall coordinate with designated Owner's Engineer representative to ensure that Manufacturer's Representative is notified and accepts or declines invitation to witness preliminary and final alignments, final piping bolt ups, as applicable.
14. Installation check list forms shall be completed for each equipment by equipment installer. Check list shall be signed by equipment installer and approved by Owner and Manufacturer representative. Overall equipment shall be verified and checked for installation per Manufacturer's Installation Manuals.
15. Contractor shall perform all fabrication, installation, testing and completions in accordance with drawings, specifications, and standards.
16. All work not explicitly called for in this specification but deemed by Contractor as necessary for complete and proper installation of equipment shall be brought to attention of Manufacturer representative in writing, prior to commencing any such work.
17. Contractor shall submit any clarifications, exceptions, or deviations, to this specification including all attached drawings and documents together with his/her bid. Absence of any clarifications, deviations, or exemptions will be assumed to mean that bid is in complete compliance to specification. Any deviations or exceptions furnished at later date will not be accepted and requirement shall be complied by Manufacturer with no cost and time implication to manufacturer.
18. Any damage to equipment or environment because of installation by Contractor shall be repaired or corrected at cost of Contractor.
19. Contractor shall remove all materials from site during and after installation that are not required.

3.03 PURGING OF AIR PIPING

A. After installation of air piping, but before ends on distribution piping are connected, purge entire system with high velocity air. Isolate each distribution leg and operate with air at a velocity in excess of 5,000 feet per minute to remove all potential clogging material from piping system. After this blow-out procedure has been completed and approved by Engineer for a given leg, connect to filters. Temperature of purge air shall not exceed rated temperature of blower system.

3.04 FIELD QUALITY CONTROL

A. General:
   1. Submit details of test procedures for approval at least two months prior to test.
   2. Notify Engineer at least one week in advance of scheduled test dates.
   3. Provide all required gages, manometers, taps, pressure measuring devices and other incidentals required for field tests. Calibrate all instruments prior to tests, in accordance with applicable standards.
   4. If equipment fails to pass field tests, repair or replace equipment and retest until it passes. All repairs or replacements shall be approved by Engineer.

B. Performance Test in Actual Water:
   1. After water flow has stabilized, flow, pH, Total Organic Carbons (TOC), and Alkalinity, and Chlorine readings shall be taken in all areas where applicable in treatment plant.
   2. Chemical Dosing levels shall be recorded on an hourly basis during operation, for at least one week.
   3. Chemical Dosing, and analyzer reading results shall be submitted to Engineer for review. Engineer may decide to change distribution of diffusers in various grids, limited by number of available blanks.
   4. Test blowers and air scour system to meet specifications in full depth actual water and media installed. Record air flowrates and submit to Engineer.

3.05 MANUFACTURER'S SERVICES

A. A factory trained representative shall be provided for installation supervision, start-up and test services and operation and maintenance personnel training services. Representative shall make a minimum of (--1--) visits, minimum (--2--) hours on-Site for each visit, to Site. First visit shall be for assistance in installation of equipment. Subsequent visits shall be for checking completed installation, start-up and training of system. Manufacturer's representative shall test operate system in presence of Engineer and verify equipment conforms to requirements. Representative shall revisit the Site as often as necessary until all trouble is corrected and installation is entirely satisfactory.

B. All costs, including travel, lodging, meals and incidentals, for additional visits shall be at no additional cost to Owner.

END OF SECTION

SECTION 46 21 10 – PACKAGED WATER TREATMENT PLANT EQUIPMENT

PART 1 - GENERAL

1.01 DESCRIPTION

A. Scope:

1. Packaged Water Treatment Plant Equipment Manufacturer (Manufacturer) shall provide all labor, materials, equipment, and incidentals as shown, specified and required to furnish rapid mix, flocculation, dissolved air flotation (DAF), and dual media filtration system as described within this specification. Installation will be completed by a separate Contractor.
2. All Packaged Water Treatment Plant Equipment shall meet Buy America Requirements.
3. The Manufacturer of the equipment shall be vested with responsibility for the proper function of the complete system including
    a. Two rapids mixer located within an above grade tank and a connected flow distribution box consisting of flow distribution weirs and an overflow weir.
    b. Three above grade treatment vessels containing Flocculation and DAF systems
    c. DAF recirculation system including three recirculation pumps, two saturators, and a compressed air system consisting of two air compressors and a single receiving tank
    d. Two above grade filtration vessels each containing three dual media filtration systems
    e. PLC based control system, control panels, and related skid-mounted wiring for the rapid mix, flocculation, DAF systems, and filtration system as described within this specification
    f. Motors for the rapid mixers, flocculators, DAF system components including the solids / residuals collection mechanism, and recirculation pumps,
    g. Valves, actuators, and process instrumentation as shown on the drawings and located within this specification.
    h. Access Platforms around the treatment systems and tanks as shown on the procurement drawings

4. In addition to the materials and equipment provided, the Manufacturer shall provide the following services:
    a. Shop Drawings
    b. As-Built Drawings
    c. System Commissioning and Start Up Services
    d. Operator Training
    e. Electronic and Hard Copy Operations and Control Manuals
5. The following items will NOT be provided by the Packaged Water Treatment Plant Manufacturer. These items will be procured and installed by a separate Contractor. The Packaged Water Treatment Plant Equipment Manufacturer is required to coordinate with the Contractor to ensure that the equipment supplied within this specification operates as intended. Materials, Equipment, Structures and Services provided by the Contractor include:
    a. Installation of all equipment provided by the Packaged Water Treatment Equipment Manufacturer.
    b. General Site Grading, concrete foundation for all equipment, and treatment plant building.
    c. Raw Water Inlet control valve and flowmeter.
    d. Raw Water Inlet Pumps.

e. Interconnecting process pipelines as shown on the procurement drawings.
f. Chemical Feed systems including bulk chemical storage, feed pumps, and associated pipes and valves. The following chemicals will be provided:
    1) Soda Ash or Magnesium Hydroxide dosed at the Rapid Mix System.
    2) PAX-19-XL (Poly Aluminum Chloride) dosed at the Rapid Mix System.
    3) Filter Polymer Aid (only to be used when Raw Turbidity is above 10 mg/l, dosed upstream of the filters).
    4) Potassium Permanganate or Sodium Permanganate dosed upstream of the filters.
    5) NaOH dosed downstream of the filters.
    6) NaOCl dosed downstream of the filters.
    7) $Zn_3(PO_4)_2$ dosed downstream of the filters.
g. Filter Air Scour Blowers designed to supply air at a loading rate of 3 to 5 SCFM/ft2 of filter area.
h. Filter Backwash Water Supply including flow control valves and meters (the source of backwash water is elevated potable water storage tanks).
i. DAF and Filter Backwash Residuals Management System.
j. Process Instrumentation not connected to the Rapid Mix, Flocculation/DAF, and Filter Equipment including
    1) Raw Water Instrumentation
        a) Flowmeter (Endress+Hauser 400W series, or equal)
        b) Turbidity (HACH TU5300, or equal)
        c) Turbidity Real-Time Dosing Controller (Hach RTC-COAG Module, or equal)
        d) pH (Hach DPD1P1, or equal)
        e) Temperature gauge/transmitter (Ashcroft, WIKA, or equal)
        f) Total Organic Carbon (Hach B3500 TOC Analyzer, or equal)
        g) Alkalinity (Hach EZ Series, or equal)
        h) UV254 (Hach EZ Series, or equal)
    2) Post DAF Unit Instrumentation
        a) Turbidity (HACH TU5300, or equal)
        b) pH (Hach DPD1P1, or equal)
        c) Alkalinity (Hach EZ Series, or equal)
        d) Total Organic Carbon (Hach B3500 TOC Analyzer, or equal)
        e) UV254 (Hach EZ Series, or equal)
    3) Finished Water Instrumentation
        a) Turbidity (HACH TU5300 or Equal) (note: Turbidimeters for individual filters will be provided by the Packaged Water Treatment Plant Manufacturer)
        b) pH (Hach DPD1P1, or equal)
        c) Alkalinity (Hach EZ Series, or equal)
        d) Total Organic Carbon (Hach B3500 TOC Analyzer, or equal)
        e) UV254 (Hach EZ Series, or equal)
k. Water Treatment Plant Smart SCADA System.
l. Water Treatment Plant Ventilation, Humidity Control, and Heating System.
m. Electrical power distribution.
n. Electrical and control wiring between equipment supplied by Manufacturer and facility main control and electrical equipment.

o. Electrical and control wiring between packaged water treatment plant supplied electrical equipment stored within the electrical room and the local motors, valve actuators, instruments, etc.
p. Variable Frequency Drives (VFDs) and motor starters.
q. Backup generator and automatic transfer switch.

B. Coordination:
1. Develop installation procedures for the Contractor for the equipment specified within this Section.
2. Notify the Contractor, Owner, and Engineer in advance of the equipment delivery to provide them with sufficient time for the coordination of the installation of items included in their contracts that must be installed with, or before, Packed Water Treatment Plant equipment.

1.02 REFERENCES

A. Standards referenced in this Section are listed below:
1. National Sanitation Foundation (NSF)
a. ANSI/NSF 61, Drinking Water System Components - Health Effects
2. American Bearing Manufacturers Association, (ABMA)
3. American Gear Manufacturers' Association, (AGMA)
4. American National Standards Institute, (ANSI)
5. American Society of Mechanical Engineers, (ASME)
a. ASME, Boiler and Unfired Pressure Vessel Code
6. American Institute of Steel Construction, Inc., (AISC)
a. AISC 316, Manual of Steel Construction ASD
b. AISC 317, Manual of Steel Construction, Volume 11 Connections
c. AISC S310, Design, Fabrication and Erection of Structural Steel
7. American Society for Testing and Materials, (ASTM)
a. ASTM A36/A 36M, Specification for Carbon Structural Steel
b. ASTM A48/A 48M, Specification for Grey Iron Castings
c. ASTM A108, Specification for Steel Bars, Carbon and Alloy, Cold Finished
d. ASTM A536, Specification for Ductile Iron Castings
e. ASTM C127, Test Method for Density, Relative Density (Specific Gravity) and Absorption of Coarse Aggregate
f. ASTM C128, Test Method for Density, Relative Density (Specific Gravity) and Absorption of Fine Aggregate
g. ASTM C136, Test Method for Sieve Analysis of Fine and Coarse Aggregate
h. ASTM E11, Specification for Wire Cloth Sieves for Testing Purposes
8. American Welding Society, (AWS)
a. AWS D1.1/D1.1M, Structural Welding Code-Steel
9. Institute of Electrical and Electronics Engineers, (IEEE)
10. National Electrical Code, (NEC)
11. National Electrical Manufacturers Association, (NEMA)
12. National Fire Protection Association, (NFPA)
a. NFPA 79, Electrical Standard for Industrial Machinery
13. The Society for Protective Coatings, (SSPC)
14. Underwriters' Laboratories, Inc., (UL)

1.03 QUALITY ASSURANCE

A. Manufacturer's Qualifications: Manufacturer shall have experience in providing similar type equipment and shall show evidence of at least five installations where rapid mix, flocculation, DAF, and dual media filtration systems of the type specified herein have been in satisfactory operation for at least five years.

B. Component Supply and Compatibility:

1. All equipment included in this Section regardless of the component manufacturer shall be furnished by a single packaged water treatment plant manufacturer.
2. The packaged water treatment plant equipment manufacturer shall prepare all Shop Drawings and other submittals for all components furnished under this Section.
3. All components shall be specifically constructed for the specified service conditions and shall be integrated into the overall assembly by the packaged water treatment plant manufacturer.
4. Gear reducers, shaft and impeller shall be designed, manufactured, and tested by the suppliers to the Packaged Water Treatment Equipment Manufacturer.

C. Welding:

1. Aluminum Welding Requirements:
   a. Welding shall be performed by fully qualified and experienced welders certified to perform to CWB CSA 47.2 or AWS D1.2 welding codes and shall use an inert gas shielded arc or resistance welding process. Filler materials shall be as recommended by the aluminum manufacturer and shall result in welds having corrosion resistance equal to or greater than the parent metal.
   b. Weld penetration, strength, and integrity shall ensure optimum Brinell hardness, tensile strength, modulus intension, compression, and shear to be exerted on the finished product.
   c. After all welding and fabrication have been completed, all exposed surfaces of all structures shall be acid etched to present a uniform and pleasing appearance, not susceptible to corrosion.

2. Stainless Steel Welding Requirements:
   a. Welding shall be performed by fully qualified and experienced welders certified to perform welding in accordance with AWS D1.6 Structural Welding – Stainless Steel
   b. Stainless steel plates and shapes: Type 316.
   c. Surface preparation: Remove oil, grease, dirt, rust, loose mill scale, and other foreign elements by "Power Tool Cleaning" in accordance with SSPC-SP3.

D. Filter Media Quality Assurance:

1. Materials Testing:
   a. Tests shall be performed on representative samples taken from the proposed filter media and the filter media shipped to the plant. Tests to be performed and the test standards to be followed by the testing laboratory shall include the following:
      1) Specific Gravity (apparent): ASTM C127 for filter sand; ASTM C128 for filter anthracite.
      2) Sieve Analysis: ASTM C 36 and Section 5.5, AWWA B100.
      3) Porosity (performed on gravel only): Section A23, AWWA B100.
      4) Acid Solubility: Section 5.5, AWWA B100.
      5) Hardness (anthracite only).

2. Rejection of Filter Media:
    a. Failure of the filter media to meet the requirements of the Contract Documents as demonstrated by the certified test reports of the testing laboratory shall constitute cause for rejection.
    b. Filter media that has been rejected shall be removed from the Site and replaced with acceptable material at Manufacturer's expense.

3. Testing Laboratory:
    a. Contractor shall retain the services of an independent testing laboratory, acceptable to the Engineer, to perform the tests specified herein, and to attest to the fact that the filter media will comply with the requirements set forth herein, and that all testing work has been in accordance with the methods stipulated.
    b. All costs incidental to the testing laboratory shall be borne entirely by the Manufacturer.

1.04 SUBMITTALS

A. Shop Drawings and submittals: Submit the following:
    1. General Information:
        a. American Iron and Steel Certificates.
        b. Manufacturer's literature, data sheets, engineering data, fabrication, specifications, illustrations, assembly, and mounting drawings of all components showing materials of construction, significant dimensions, and performance data in sufficient detail to demonstrate compliance with specified requirements.
        c. Total weight of each unit, structure loads at supports, and connection details.
        d. Provide setting drawings, and directions for the installation of anchor bolts and other anchorages.
        e. Motors:
            1) Horsepower
            2) RPM
            3) Insulation and enclosure details
            4) Efficiency at 1/2, 3/4, and full load
        f. Wiring and control diagrams showing all electrical connections to the motor and controls, including external/field connections by others/Contractor.
        g. Detailed, project-specific drawings of control panels furnished showing at minimum panel layout, bill of material (BOM), wiring, and control schematics.
        h. Electrical information, including complete load list.
        i. Certification. Furnish test results from a nationally recognized independent testing facility verifying that the materials used in the manufacture of all assemblies specified herein meet the nontoxicity requirements of the National Sanitation Foundation Standard 61 (ANSI/NSF-61) in effect at the time of placement in the packaged water treatment plant system.
            1) Test reports.
    2. Rapid Mixer Information:
        a. Rapid Mixer Tanks and Flow Distribution Tank.
            1) Layout Drawings
            2) Structural Calculations with United States Professional Engineer’s Seal and Signature. Structural stamps from Alaska, California, Washington, or Oregon are acceptable.

b. Impellers:
    1) Diameter.
    2) Tip speed at maximum shaft speed and at the minimum required water horsepower.
    3) Stress at maximum load.
    4) Setting elevation.
    5) Water horsepower at maximum speed and minimum temperature.
    6) Power number.

c. Impeller Shafts:
    1) Diameter.
    2) Materials of construction.
    3) Critical speed of rotating assembly.
    4) Torsional, bending, and combined stresses at maximum load
    5) Coupling details.
    6) Impeller connection details.

d. RPM:
    1) At maximum motor speed.
    2) At minimum required water horsepower.
    3) At maximum water horsepower at reduced speed.

e. Gear Reducers:
    1) Model Number.
    2) AGMA horsepower rating.
    3) Materials of construction.
    4) Efficiency.
    5) Bearing Ratings.
    6) Lubrication details, including all NSF approval for all lubricants.
    7) Bearing life under maximum loading conditions.

f. Rapid Mixer Specific Calculations Supporting Design submittal for information for record purposes only:
    1) Shaft and impeller stresses.
    2) Power number.
    3) Critical speed.
    4) Bearing life.
    5) Tip speed.
    6) Water horsepowers.

3. Vertical Flocculation and DAF System Information:
    a. Flocculation and Thickener Tank.
        1) Layout Drawings
        2) Structural Calculations with United States Professional Engineer's Seal and Signature. Structural stamps from Alaska, California, Washington, or Oregon are acceptable.

    b. Flocculation Equipment Horsepower and velocity gradient calculations.
    c. Flocculation Paddles:
        1) Diameter.
        2) Tip speed at maximum shaft speed and at the minimum required water horsepower.
        3) Stress at maximum load.

4) Setting elevation.
5) Water horsepower at maximum speed and minimum temperature.

d. Flocculator Paddle Shafts:
1) Diameter.
2) Materials of construction.
3) Critical speed of rotating assembly.
4) Torsional, bending, and combined stresses at maximum load.
5) Coupling details.
6) Connection details.

e. Flocculator RPM:
1) At maximum motor speed.
2) At minimum required water horsepower.
3) At maximum water horsepower at reduced speed.

f. Flocculator Gear Reducers:
1) Model Number.
2) AGMA horsepower rating.
3) Materials of construction.
4) Efficiency.
5) Bearing Ratings.
6) Lubrication details, including all NSF approval for all lubricants.
7) Bearing life under maximum loading conditions.

g. DAF Recirculation Flow System:
1) Pump(s).
2) Retention tank and air compressor.
3) Air system devices and controls.

h. Sludge Collector Equipment:
1) Top collector, chain, flights, and drive.
2) Bottom collector, chain, flights, and drive
3) Circular tank collector equipment, if supplied.

i. Screw Conveyor Cross Collectors:
1) Size and construction.

j. Miscellaneous Equipment.
k. Gear Reducers:
1) Model number.
2) AGMA horsepower rating.
3) Materials of construction.
4) Efficiency.
5) Bearing ratings.
6) Lubrication details.
7) Bearing life under maximum loading conditions.

4. Filter System Information:
a. Filter Tank detail drawings showing installation and assembly details including setting drawings, templates, and details for the installation of the anchorages. This shall include all requirements to interface the underdrain system with the filter box.
b. Filter Tank Structural Calculations with United States Professional Engineer's Seal and Signature. Structural stamps from Alaska, California, Washington, or Oregon are acceptable.

c. Submit Test results documenting the hydraulic characteristics of the underdrains. Headloss data shall be provided for the maximum air and water flowrates specified in Paragraph 2.06. below, including combined air/water washing, and flow distribution calculations.
d. Submit test records from an independent hydraulic laboratory demonstrating the hydraulic characteristics of the underdrains under conditions at least equivalent to those proposed for this Project. The Packaged Water Treatment Plant Manufacturer shall also certify the compatibility of the underdrain system with the filter media specified.
e. Certification. Furnish test results from a nationally recognized independent testing facility verifying that the materials used in the manufacture of all assemblies specified herein meet the nontoxicity requirements of the National Sanitation Foundation Standard 61 (ANSI/NSF-61) in effect at the time of placement in the filters.

5. Filter Media Information:
   a. General: Representative samples shall be taken for both the proposed filter media and the filter media shipped to the plant site as set forth in the following paragraphs. The Contractor will not be allowed to install the Packaged Water Treatment Plant filter media until certified copies of the testing laboratory report have been submitted to and approved by the Engineer.
   b. Representative Samples of Proposed Filter Media: Contractor shall furnish to the Engineer and testing laboratory representative samples of the several sizes of gravel, sand, and anthracite filter materials proposed to be used in the effluent filters. Care shall be taken to ensure that samples are obtained from locations within each stockpile to ensure characteristics representative of the material proposed. A full depth core sample shall be taken of the stockpile. Samples shall be placed in tight glass or clear plastic jars holding not less than two quarts and shall be properly labeled.
   c. Representative samples of the filter media shipped to the plant:
      1) Bulk shipment: Representative samples of each filter media shipped to the Site in bulk quantities shall be taken by a qualified representative of the testing laboratory. One representative full depth core sample shall be taken from each carload of filter media. Final samples shall then be placed in two tight glass or clear plastic jars, each holding not less than two quarts, properly labeled. One of the two sample jars shall be furnished to the Engineer and the other shall be analyzed by the testing laboratory.

   d. Bag shipment: Representative samples of filter media shipped to the Site in bags shall be collected using a core sampler. Samples shall be taken by a qualified representative of the testing laboratory in the presence of the Engineer. For shipments up to 300 bags, ten percent of the bags shall be sampled. For shipments in excess of 300 bags, five percent shall be sampled. Final samples shall then be placed in two tight glass or clear plastic jars, each holding not less than two quarts and properly labeled. One of the two sample jars shall be analyzed by the testing laboratory.
   e. No filter media shall be placed until certified copies of the testing laboratory report on the bag media has been submitted to and approved by the Engineer.
   f. Test reports: Certified test reports on both the representative samples of proposed filter media and on samples of filter media shipped to the Site shall be submitted in duplicate by the testing laboratory directly to the Engineer. Test reports shall contain, as a minimum, the following information for each media:

1) Average specific gravity (apparent).
2) Total percentage of material passing each sieve.
3) Total percentage of material retained on each sieve.
4) A plot on probability paper, showing the percent of the material passing the sieve versus the sieve size opening.
5) Effective Size: The size of grain (in millimeters) such that ten percent by weight of the media grains are smaller in diameter.
6) Uniformity Coefficient: The ratio of the size of the grain which has 60 percent by weight of the media grains smaller in diameter to the effective size.
7) Acid solubility.
8) Sand porosity.
9) Hardness (anthracite).

B. Operation and Maintenance Manuals: Submit complete Installation, Operation, and Maintenance Manuals, including, test reports, maintenance data and schedules, description of operation, and spare parts information.

1.05 DELIVERY, STORAGE AND HANDLING

A. Deliver materials to the Site to ensure uninterrupted progress of the Work. Deliver anchor bolts and anchorage devices which are to be embedded in cast in place concrete in ample time to not delay that Work.
   1. Packing:
      a. Inspect prior to packing to assure that assemblies and components are complete and undamaged.
      b. Protect machined surfaces and mating connections.
      c. Protect bearings and gearing with a shop applied corrosion prevention coating.
      d. Cover all openings into gear boxes with vapor inhibiting and water repellent material.
      e. Adequately crate to prevent damage during shipment, delivery, and storage.
      f. Identify crate contents on packing slip fastened to the outside of crate.
   2. Filter Media:
      a. Deliver filter media in bags or semi bulk containers only. Bulk shipment by rail car or truck will not be permitted.
      b. Conform to AWWA B100 and the requirements and recommendations of the filter media supplier.
      c. Do not order materials for shipment until Engineer has approved the results of the Certified Tests Results.

B. Storage and Protection:
   1. The Contractor will be required to store materials at the construction site to permit easy access for inspection and identification. The Contractor will keep all material off the ground, using pallets, platforms, or other supports.
   2. Protect steel members and packaged materials from corrosion and deterioration.
   3. The Contractor will store filter media on pallets. The Contractor will cover media stored outdoors with black polyethylene sheets to prevent UV deterioration and moisture contamination.
   4. The MANUFACTUER is required to identify equipment, parts, and materials that must be stored in an environmental and temperature-controlled warehouse or environment. In addition, the Manufacturer is required to identify equipment that requires heating during storage to prevent damage due to humidity.

C. Acceptance at Site: All boxes, crates and packages shall be inspected by Contractor upon delivery to the Site. Contractor shall notify Engineer and Manufacturer, in writing, if any loss or damage exists to equipment or components. The Packaged Water Treatment Plant Equipment Manufacturer must replace loss and repair damage to new condition.

PART 2 PRODUCTS

2.01 MANUFACTURER

A. The following manufacturers have been reviewed as an acceptable and capable of providing the overall Packaged Water Treatment Plant Equipment Manufacturer. Listing of the manufacturers below does not indicate that the equipment complies with Buy America requirements
- AWC
- Evoqua
- Suez
- Or Equal.

B. Subcomponents of the packaged water treatment plant equipment will be provided by additional manufacturers and suppliers as noted within this specification.

2.02 RAW WATER QUALITY AND CONDITIONS

A. Raw Water Source Flow Rates, and Quality:
1. Raw Water is conveyed by gravity from Wrangell Lower Reservoir and the Wrangell Upper Reservoir. The Watershed is mountainous with heavy evergreen and deciduous tree coverage.
2. Typical raw water quality is as follows:

Parameter	Peak	Average	Minimum
Temperature (^{o}F/ °C)	17 °C	8.5 °C	3.1 °C
Turbidity (NTU)	12	1.7	0.3
Total Dissolved Solids (mg/L)	-	34	-
Color (TCU)	145	76.2	0.9
pH	7.0	6.1	5.1
Alkalinity (mg/L as $CaCO_3$)	10	9	-
Hardness (mg/L as $CaCO_3$)	10	9	-
Iron (mg/L)	-	1.0	-
Manganese (mg/L)	-	0.1	-
Total Organic Carbon (mg/L)	6.4	5.9	5.3
Dissolved Organic Carbon (mg/L)	6.1	5.0	3.9

2.03 FINISHED WATER FLOW RATES AND QUALITY

A. Finished Water Flow Rates:
1. The packaged water treatment plant equipment be designed to provide treated water flow at the following flow rates while meeting finished water quality parameters:
   a. Peak Flow: 2.26 MGD
   b. Start UP Conditions Average Flow: 0.71 MGD

c. Minimum Flow: 0.5 MGD
d. Treated Water Quality:

2. Treated Water Quality shall, as a minimum, meet the following criteria:

Parameter	95% Compliance	100% Compliance
Turbidity (NTU)	Less than 0.1	Less Than 1
Total Dissolved Solids (mg/L)	Less than 35	Less than 500
Color (TCU)	Less than 30	Less than15
pH	7.5-8.5	6.5-8.5
Alkalinity (mg/L as $CaCO_3$)	125-175	NA
Hardness (mg/L as $CaCO_3$)	125-175	NA
Iron (mg/L)	Less than 0.2	Less than 0.3
Manganese (mg/L)	Less than 0.03	Less than 0.05

3. The plant shall achieve a 2.5 log, (99.6%) removal of particles in the 3-5 µm (Cryptosporidium) size range.
4. The plant shall achieve a 2.5 log, (99.6%) removal of particles in the 5-15 µm (*Giardia*) size range.

2.04 RAPID MIXER SYSTEM

A. General: The Rapids Mixer System shall be contained within a multi-compartment tank containing two separate rapid mixer zones followed by a flow distribution zone. Rapid Mixer Equipment shall be designed to be suitable for the process and service conditions as shown below and in the Design Criteria.

Design Conditions	Rapid Mixer (No. 1)	Rapid Mixer (No. 2)
Size (ft. by ft.):	3 by 3	3 by 3
Side Water Depth, (ft.):	5	5
Flow Direction, (Up/Down):	UP	DOWN
Basin Bottom Elevation, (Elev.):	269	269
Velocity Gradient	701	701
Drive Motor Horsepower, (hp):	3	3
Minimum Impeller Diameter, (in.):	To Be Determined by Packaged Water Treatment Plant Equipment Manufacturer	
Maximum Impeller Diameter, (in.):	To Be Determined by Packaged Water Treatment Plant Equipment Manufacturer	
Minimum Impeller Shaft Diameter, (in.):	To Be Determined by Packaged Water Treatment Plant Equipment Manufacturer	
Drive Motor Voltage:	480	480

Notes:
1. Minimum water horsepower at maximum speed and minimum water temperature of (--1--) deg C.
2. Maximum water horsepower at reduced speed and maximum water temperature of (--2--) deg C.
3. Refer to Drawings for locations and mounting elevations.

B. Manufacturers:
   1. The Packaged Water Treatment Plant Manufacturer shall provide rapid mix equipment from one of the following manufacturers. Listing of the manufacturers below does not indicate that the equipment complies with Buy American requirements.
      a. Philadelphia Mixer
      b. SPX Flow
      c. Dynamix
      d. AFX
      e. Or Approved Equal.

C. Details of Construction:
   1. General:
      a. Rapid Mixer Tank and Flow Distribution Tank shall be provided as shown on the procurement drawings. The Packaged Water Treatment Plant Equipment Manufacturer shall be responsible for the structural design of the tanks as well as the tank legs and support system.
         1) Rapid Mix and Flow Distribution Tank shall be constructed of Marine Grade Aluminum or 304 Stainless Steel.
         2) Support legs for the Flow Distribution Tank shall be Marine Grade Aluminum, 304 Stainless Steel, or Carbon Steel. Dielectric couplings shall be provided where differing material of construction are provided.
         3) All hardware shall be 304 SS or Marine Grade Aluminum.
         4) Tank structural design shall be provided by the Manufacturer.
      b. Each rapid mixer assembly shall consist of an impeller, impeller shaft, gear reducer and drive motor.
      c. Sound level shall not exceed 85 dBA at a distance of 3' from the drive assembly at any operating speed.
      d. Design equipment for 24-hours per day continuous operation.
      e. Gear reducer assemblies and devices mounted on, at or near the assemblies shall be suitable for an outdoor environment at the location of the facility.
      f. Design rapid mixer assemblies to run at any operating speed at any liquid level in the basin, including empty, without mechanical damage.

   2. Impellers Details of Construction:
      a. General: Provide a single, low speed, field removable, three blade axial flow type impeller specially designed to minimize shear and turbulence while maximizing fluid motion. Power number shall not exceed 0.35. Provide up and down pumping impellers as required in the Design Criteria. Key the impeller to the shaft.
      b. Diameter: Refer to Design Criteria.
      c. Water Horsepower: Refer to Design Criteria.
      d. Tip Speed: Provide as required for optimum performance, but not to exceed eight feet per second at the required water horsepower.
      e. Setting: Locate the centerline of the impeller from the basin bottom:
         1) From 1.0 to 0.75 times the impeller diameter for down pumping impellers.
         2) From 1.0 to 0.75 times the impeller diameter for up pumping impellers.
      f. Combined tensile and shear stress: Not to exceed 11,000 psi under maximum loading conditions.
      g. Materials:
         1) Use Type 316 stainless steel hardware to assemble the impeller or fasten the impeller to the shaft.

2) Remove mill scale, rust, and contaminants.
3) Grind smooth welds, sharp corners, and sheared edges.
4) Construct impeller of Type 316 stainless steel.

3. Impeller Shafts:
   a. Provide overhung solid shaft design.
   b. Bearings located outside of the gear reducer are not permitted.
   c. Connect impeller shaft to the output shaft of the gear reducer by means of a coupling located above the mounting platform. Provide for removal (dropping) of the shaft without disturbing the gear reducer housing or any internal components.
   d. Materials: Type 316 stainless steel.
   e. Combined tensile and shear stress: Not to exceed 8,000 psi at maximum load.
   f. Runout: Not to exceed 1/8" for every 10' of overhang as measured when turning by hand.
   g. Couplings: Use rigid flanged bolted type couplings connected to the shafts by welding or an interference fit. Mating faces shall utilize a rabbetted male and female connection and shall not require match marks for alignment. Use same materials as specified for the shafts.
   h. Critical Speed: Maximum output shaft speed shall not exceed 70% of the first lateral critical speed.
   i. Length: Not to exceed 20' per section. Provide an additional impeller shaft coupling located below the mounting platform and above the water level, if necessary to limit the length of shaft.
   j. Keyway: Provide for field adjustment of the impeller setting of not less than 9" above and below the setting in 3" or less increments

4. Gear Reducers:
   a. General:
      1) Construction: Provide right angle gear reducer in accordance with AGMA Standards.
      2) Nameplate: Provide stainless steel nameplate with AGMA calculated drive horsepower rating.
      3) Maintenance: Recommended lubricant change interval shall not be less than 2,500 hours or six months, whichever comes first.
      4) Efficiency: Gear drive train efficiency shall not be less than 90%.
      5) Cooling: External cooling coils or devices to dissipate heat will not be acceptable.
      6) Openings: Provide water and dust proof covers.
      7) Internal Output Shaft Diameter: Equal to or greater than the impeller shaft diameter.

   b. Rating:
      1) Gear reducers which include separate shaft bearings, located above and below the main drive bearings and a torsionally resilient coupling at the impeller shaft, shall have a minimum rating of 1.5 times the rated horsepower of the drive motor.

   c. Lubrication:
      1) All lubricants shall be NSF approved.
      2) Provide easy filling and draining without spills.
      3) Provide dry well construction designed to eliminate oil leakage at the output shaft.

4) Provide splash or immersion oil lubrication from a common sump for all gearing.
5) Provide a dip stick and/or sight glass to observe oil level.
6) Output shaft bearings may be grease lubricated. All other bearings shall be submerged in the lubricating oil. Inlet and outlet grease fittings shall be accessible from outside the gear reducer housing. Provide neoprene covers over fittings.

d. Bearings:
1) Type: Tapered roller.
2) Rating: ABMA L-10 rating at the supplied motor nameplate horsepower shall not be less than 100,000 hours.

e. Gears and Gearing:
1) General: Gear reducer assembly shall incorporate a double or triple reduction gear drive system.
2) Type: Gearing shall be a combination of helical and spiral bevel. Worm gearing is not acceptable.
3) Gear Quality: AGMA Quality No. 10 or better in accordance with AGMA 390.03.
4) Arrangement: Output shaft shall pass through a hollow shaft driven by the gear train.
5) Gear Ratios: Not to exceed 7 to 1.

f. Gear Reducer Housing:
1) Materials: Close grained cast-iron, ductile iron or stress relieved fabricated steel.
2) Accessories: Provide lifting lugs.
3) Openings: Provide water and dustproof covers and seals over all openings.

g. Gear Reducer Mounting:
1) General: Provide a gear reducer support pedestal or steel support frame designed to:
a) Support the gear reducer.
b) Provide easy access to the impeller shaft coupling and reducer oil drain. Oil drain clearance shall not be less than 12" and shall be adequate to fit a bucket which will accept 120% of the oil contained in the gear housing.
c) Mount on the support platform as shown.
2) Materials:
a) Use same materials as specified for the gear reducer housing.
b) Steel support frames shall be fabricated from structural steel channels, angles and plates having a minimum thickness of 5/16".
3) Mounting Hardware and Shim Material: Use Type 316 stainless steel hardware and shim material for mounting the gear reducer to the pedestal or frame.

h. Anchor Bolts:
1) General: Provide as required to mount the gear reducer support pedestal or frame to the support platform.
2) Materials: Type 316 stainless steel.
3) Size and Number: As recommended by Manufacturer for mounting in accordance with the details shown and sufficient to withstand the torque and other loadings transmitted by the gear reducer.

i. Drive Motors:
   1) Suitability: Suitable for the torque load, variations in torque and other loading conditions imposed by the gear reducer.
   2) Ratings:
      a) Nameplate horsepower rating and allowable temperature rise shall not be exceeded under any specified loading condition at any operating speed.
      b) Motors shall not be rated at less than 0.5 horsepower nor less than the rating shown in the Design Criteria.
   3) Speed:
      a) Maximum: 1800rpm.
      b) Minimum: 900 rpm.
   4) Enclosure: TEFC with a finned cast housing.
   5) Service Factor: 1.15 minimum.
   6) Applicable Standards: IEEE, NEMA, ABMA, ANSI.
   7) Gear Reducer Connection: Provide an easily accessible torsionally resilient flexible coupling between the motor and the gear reducer. Provide a coupling guard.
   8) Motor Bearings: Extended duty type, L-10 rating greater than 100,000 hours at maximum load.
   9) Insulation: Class H or better.
   10) Temperature Rise: Limit to Class B temperature rise at 50°C ambient at full load.
   11) Type: Horizontal foot mounted with standard NEMA frame and shaft.
   12) Nameplate: Provide a stainless steel nameplate describing motor characteristics and required lubricants.
   13) Electrical Requirements: AC motors shall be designed for 480 VAC 3 phase, 60 Hz current.
   14) Motor Efficiency: AC motors, one horsepower and larger shall be energy efficient motors as described in NEMA MG-1.
   15) VFD Rated: AC motors shall be inverted duty rated.

2.05 FLOCCULATION AND DAF SYSTEM

A. General: The Flocculation and DAF system shall be contained within a multi-compartment tank containing two separate flocculation zones followed the DAF clarifier by a flow distribution zone. The overall dimension of the tank shall as shown on the procurement drawings

B. Manufacturers:
   1. The Packaged Water Treatment Plant Manufacturer shall provide vertical flocculation equipment from one of the following manufacturers. Listing of the manufacturers below does not indicate that the equipment complies with Buy American requirements.
      a. Philadelphia Mixer
      b. SPX Flow
      c. Dynamix
      d. AFX
      e. Or Approved Equal.

C. Flocculation equipment shall be designed to be suitable for the process and service conditions as shown below and in the Design Criteria.
   1. Provide vertically mounted flocculation equipment in each of the flocculation chambers in each of the tanks. A total of 2 vertical flocculators are required per treatment train.

Each flocculator shall consist of a vertical shaft, shaft couplings, shaft bearings, aluminum or 304 stainless steel paddle blades with steel supporting arms, variable speed drives and controls. Transverse baffle walls-integral to the tank design with multiple ports will be installed at the entrance to the first stage of flocculation, between each stage of flocculators, and at the exit of the third stage. All components of the equipment shall be designed for continuous, 365-days, 24-hours per day operation. All parts of the flocculator mechanisms shall be amply proportioned for all stresses which may occur during fabrication, erection, and operation. Corresponding parts of similar units shall be interchangeable.

2. Design Criteria:
   a. The flocculation equipment shall be designed in accordance with the following criteria:

	Stage No. 1	Stage No. 2
Number of Units Required within each Tank:	1	1
Design Flow, (mgd):	.8	.8
Width, (ft.):	10	10
Length in Direction of Flow, (ft.):	16	16
Average Side Water Depth, (ft.):	11	11
Detention Time (min)	30	30
Velocity Gradient, (sec^{-1}):	80	60
Temperature, (°F):	34-60	34-60
Approximate Diameter of Flocculators, (ft.):	To Be Determined by Packaged Water Treatment Plant Equipment Manufacturer	
Approximate Size of Blades, (in. by in.):	To Be Determined by Packaged Water Treatment Plant Equipment Manufacturer	
Approximate Number of Paddles/Arm:	To Be Determined by Packaged Water Treatment Plant Equipment Manufacturer	
Number of Paddle Wheel Assemblies:	To Be Determined by Packaged Water Treatment Plant Equipment Manufacturer	
Maximum Peripheral Blade Speed, (fps):	To Be Determined by Packaged Water Treatment Plant Equipment Manufacturer	
Minimum Motor Horsepower:	0.4	0.2

3. Details of Construction
   a. General:
      1) Each flocculator assembly shall consist of an impeller, impeller shaft, gear reducer and drive motor controlled by an electrical variable speed controller.
      2) Sound level shall not exceed 85 dBA at a distance of three feet from the drive assembly at any operating speed.
      3) Design equipment for 365-day, 24-hours per day continuous operation.
      4) Gear reducer assemblies and devices mounted on, at or near the assemblies shall be suitable for an outdoor environment at the location of the facility.
      5) Design flocculator assemblies to run at any operating speed at any liquid level in the basin, including empty, without mechanical damage.

b. Impellers:
   1) General: Provide a single, low-speed, field removable, three blade axial flow type impeller specially designed to minimize shear and turbulence while maximizing fluid motion. Power number shall not exceed 0.35. Provide up or down pumping impellers as required in the Schedule of Service Conditions. Key the impeller to the shaft.
   2) Diameter: Refer to Schedule of Service Conditions.
   3) Water Horsepower: Refer to Schedule of Service Conditions.
   4) Tip Speed: Provide as required for optimum performance, but not to exceed eight feet per second at the required water horsepower.
   5) Setting: Locate the centerline of the impeller from the basin bottom:
      a) From 1.0 to 0.75 times the impeller diameter for down pumping impellers.
      b) From 0.33 to 0.5 times the impeller diameter for up pumping impellers.
      c) Combined Tensile and Shear Stress: Not to exceed 11,000 psi under maximum loading conditions.

c. Materials:
   1) Use Type 316 stainless steel hardware to assemble the impeller or fasten the impeller to the shaft.
   2) Remove mill scale, rust and contaminants.
   3) Grind smooth welds, sharp corners and sheared edges.
   4) Construct impeller of 304 SS.

d. Impeller Shafts:
   1) General:
      a) Provide overhung solid shaft design.
      b) Bearings located outside of the gear reducer are not permitted.
      c) Connect impeller shaft to the output shaft of the gear reducer by means of a coupling located above the mounting platform. Provide for removal (dropping) of the shaft without disturbing the gear reducer housing or any internal components.
   2) Materials: Provide materials as specified for the impellers.
   3) Combined Tensile and Shear Stress: Not to exceed 8,000 psi at maximum load.
   4) Runout: Not to exceed 1/8-inch for every ten feet of overhang as measured when turning by hand.
   5) Couplings: Use rigid flanged bolted type couplings connected to the shafts by welding or an interference fit. Mating faces shall utilize a rabbeted male and female connection and shall not require match marks for alignment. Use same materials as specified for the shafts.
   6) Critical Speed: Maximum output shaft speed shall not exceed 70 percent of the first lateral critical speed.
   7) Length: Not to exceed 20 feet per section. Provide an additional impeller shaft coupling located below the mounting platform and above the water level, if necessary to limit the length of shaft.
   8) Keyway: Provide for field adjustment of the impeller setting of not less than 9-inches above and below the setting in 3-inch or less increments.

e. Gear Reducers:
   1) General:
      a) Construction: Provide right angle gear reducer in accordance with AGMA Standards.

b) Nameplate: Provide stainless steel nameplate with AGMA calculated drive horsepower rating.
c) Maintenance: Recommended lubricant change interval shall not be less than 2,500 hours or six months whichever comes first.
d) Efficiency: Gear drive train efficiency shall not be less than 90 percent.
e) Cooling: External cooling coils or devices to dissipate heat will not be acceptable.
f) Openings: Provide water and dust proof covers.
g) Internal Output Shaft Diameter: Equal to or greater than the impeller shaft diameter.

2) Rating:
a) Gear reducers which include separate shaft bearings, located above and below the main drive bearings and a torsionally resilient coupling at the impeller shaft, shall have a minimum rating of 1.5 times the rated horsepower of the drive motor.
b) Gear reducers which incorporate bearing arrangements other than that described in Paragraph 2.3.D.2.a, above, shall have a minimum rating of 2.0 times the rated horsepower of the drive motor.

3) Lubrication:
a) Provide easy filling and draining without spills.
b) Provide dry well construction designed to eliminate oil leakage at the output shaft.
c) Provide splash or immersion oil lubrication from a common sump for all gearing.
d) Provide a dip stick and sight glass to observe oil level.
e) Output shaft bearings may be grease lubricated. All other bearings shall be submerged in the lubricating oil. Inlet and outlet grease fittings shall be accessible from outside the gear reducer housing. Provide neoprene covers over fittings.

4) Bearings:
a) Type: Tapered roller.
b) Rating: ABMA L-10 rating at the supplied motor nameplate horsepower shall not be less than 100,000 hours.

5) Gears and Gearing:
a) General: Gear reducer assembly shall incorporate a double or triple reduction gear drive system.
b) Type: Gearing shall be a combination of helical and spiral bevel. Worm gearing is not acceptable.
c) Gear Quality: AGMA Quality No. 10 or better in accordance with AGMA 390.03.
d) Arrangement: Output shaft shall pass through a hollow shaft driven by the gear train.
e) Gear Ratios: Not to exceed 7 to 1.

6) Gear Reducer Housing:
a) Materials: Close grained cast-iron, ductile iron or stress relieved fabricated steel.
b) Accessories: Provide lifting lugs.
c) Openings: Provide water and dustproof covers and seals over all openings.

7) Gear Reducer Mounting: Provide a gear reducer support pedestal or steel support frame designed to:
a) Support the gear reducer.

b) Provide easy access to the impeller shaft coupling and reducer oil drain. Oil drain clearance shall not be less than 12-inches and shall be adequate to fit a bucket which will accept 120 percent of the oil contained in the gear housing.
c) Mount on the support platform as shown.

8) Materials:
a) Use same materials as specified for the gear reducer housing.
b) Steel support frames shall be fabricated from structural steel channels, angles and plates having a minimum thickness of 5/16-inch.

9) Mounting Hardware and Shim Material: Use Type 316 stainless steel hardware and shim material for mounting the gear reducer to the pedestal or frame.

f. Anchorage Systems:
1) General: Provide as required to mount the gear reducer support pedestal or frame to the support platform.
2) Type: For Mounting on Structural Members: Bolts and nuts.
3) Materials: Type 304 stainless steel or marine grade aluminum.
4) Size and Number: As required for mounting in accordance with the details shown and sufficient to withstand the torque and other loadings transmitted by the gear reducer.
5) The anchor bolts shall be sized by the Manufacturer.

g. Drive Motors:
1) Suitability: Suitable for the torque load, variations in torque and other loading conditions imposed by the gear reducer and also inverter duty rated suitable for a variable speed drive controller. Gear motors are unacceptable.
2) Ratings:
a) Nameplate horsepower rating and allowable temperature rise shall not be exceeded under any specified loading condition at any operating speed.
b) Motors shall not be rated at less than 0.5 horsepower, nor less than the rating shown in the Schedule of Service Conditions.

3) Speed:
a) Maximum: 1,800 rpm.
b) Minimum: 900 rpm.

4) Enclosure: TEFC with finned cast housing.
5) Service Factor: 1.15 minimum.
6) Applicable Standards: IEEE, NEMA, ABMA and ANSI.
7) Gear Reducer Connection: Provide an easily accessible torsionally resilient flexible coupling between the motor and the gear reducer. Provide a coupling guard.
8) Motor Bearings: Extended duty type, L-10 rating greater than 50,000 hours at maximum load.
9) Insulation: Class F or better.
10) Temperature Rise: Limit to Class B temperature rise at 40°C ambient at full load.
11) Type: Horizontal foot mounted with standard NEMA frame and shaft.
12) Space Heaters: Provide 115 VAC space heaters for motors five horsepower and larger.
13) Nameplate: Provide a stainless steel nameplate describing motor characteristics and required lubricants.
14) Protective Devices: Provide thermostat type temperature sensors for motors ten horsepower and larger.

15) Electrical Requirements: AC motors shall be designed for 480 V 3 phase, 60 Hz current.
16) Motor Efficiency: AC motors, one horsepower and larger shall be energy efficient motors as described in NEMA MG 1.

D. DAF Equipment:

1. Design Criteria:

a.	Maximum design flow to each clarifier (including allowance for plant losses)	800 gpm
b.	Minimum flow for each tank	500 gpm
c.	Maximum surface loading at maximum design flow (excluding recycle)	4.7 gpm/ft^2
d.	Maximum recycle ratio %	10%
e.	Maximum air dose (mg/L treated water)	15
f.	Minimum air dose (mg/L treated water)	10

2. Each DAF cell shall be constructed so as to share a common wall with the preceding flocculation cell. The flocculated raw water shall enter each DAF cell at the base of the headwall and be distributed evenly across its entire width.
3. An inclined baffle plate shall be installed within each DAF cell, spanning the full width of the cell, and separating the tank generally into two zones, the recycle injection zone, and the clarification zone. The baffle plate shall be inclined at an angle of approximately 70° to the horizontal. The baffle plate shall be of sufficient height to prevent reverse flow of unaerated water back into the recycle injection zone.
4. Pressurized recycle shall be introduced to the DAF vessel using two manifolds of fixed orifice dispersion nozzles.
    a. Each manifold shall be configured to ensure efficient introduction of recycle over the full operating envelope of the DAF system.
    b. The upper end of the envelope shall be the condition of maximum air loading, maximum flow, maximum water temperature. The lower end of the operating envelope shall be defined by the minimum air loading, minimum flow, and minimum water temperature.
    c. It is the intent that one manifold shall be used over the lower third of this operating envelope, the other manifold in the central third and both manifolds in the upper third.
    d. Isolation valves shall be provided for each manifold. The manifolds shall be equipped with sufficient unions to permit easy removal of the manifold. All manifolds shall be Schedule 80 PVC or 316 stainless steel. Flow velocity in the manifolds and recycle feed line to the manifolds shall not exceed 2.5 fps./0.75m/s.
    e. Each nozzle shall be a fixed orifice type and shall ensure the generation of bubbles of approximately 50 microns in diameter. Each nozzle shall be complete with a dispersion devise to dissipate the energy of the inlet recycle stream prior to mixing with the flocculated water. The orifice plate and dispersion device shall be 316 stainless steel. The design shall allow for easy replacement of the orifice plate. Each nozzle shall be as produced by AWC Water Solutions, Type DAF-A, B or C, as appropriate.
5. The DAF cell shall be fitted with a variable speed, float skimming device. The skimmer shall comprise at least two parallel skimmer blades, no more than 3’ (0.9 m) apart that shall plush the float toward the discharge trough at the end of the tank.
    a. The skimmer shall have full width adjustable nylon brushes bolted to 1/4" (6 mm) thick 304 stainless steel or aluminum flights. The flights shall be a minimum of 6" (150 mm) high.

b. The skimmer shall be designed to allow scraping over the full width of the tank for a minimum of the downstream two thirds of the tank length.
c. The skimmer shall operate in cycles, by scraping float toward and over the dewatering beach. The speed of travel of the skimmer shall be fully adjustable using a variable speed drive. Adjustable timers shall be provided for skimmer operation duration and rest intervals. Continuous operation shall also be provided.

6. Each DAF cell shall be equipped with an inclined dewatering beach.
   a. Beach slope shall not exceed 1(V):3(H).
   b. The top edge of the beach shall be at least 1/2" (12 mm) above the normal maximum water surface.
   c. The lower edge of the beach shall be at least 1" (25 mm) below normal minimum water level in the tank.
7. All floats shall discharge from the beach into a float trough.
   a. The float trough shall have a minimum floor slope of 1(V) to 2(H) and shall discharge into a central or side hopper. A 2-inch diameter outlet shall be provided from the hopper and shall be equipped with a manual, lever operated butterfly valve.
   b. A spray rail cleaning system shall be provided to flush out the trough and assist float drainage. It shall use potable water provided under suitable pressure by others. The system shall be equipped with a solenoid valve and allow for adjustable duration of the spray operation. Activation of the system shall be automatically initiated following each defloating operation.
8. The DAF cell shall be provided with Schedule 40 PVC perforated pipe laterals set along the floor of the tank for the removal of the clarified sub-natant.
   a. The number of laterals and orifice size and spacing shall be such as to ensure that the water level in the DAF cell does not vary by more than 1-1/2” (37 mm) between maximum and minimum flow conditions.
   b. The laterals shall extend for at least 60% of the cell length and shall be spaced to ensure even flow patterns within the DAF cell. The spacing and the diameter of the laterals shall vary to assure even flow per unit length along the laterals to account for head losses along the length of the tube. The mall distribution of the flow should be < 5% along the clarifier collection lateral length.
9. The DAF cell laterals shall discharge into an effluent chamber equipped with a full width, adjustable height outlet weir. The weir height shall have vertical travel equal to the rise of the inclined portion of the dewatering beach to a minimum of 4" (100 mm). The clarified sub-natant shall discharge over the rectangular weir into an appropriately sized chamber to collect the flow. The outlet chamber shall be equipped with a single outlet flange with manual lever operated butterfly valve.
10. Each compartment in the DAF cells shall be equipped with a 2" (50 mm) drain with ball valve to assist periodic cleaning.

E. DAF Recirculation Saturation System:
   1. Recycle flow shall be clarified water taken from downstream of each DAF cell or from a common filter influent channel.
   2. Each recycle system shall be skid mounted and supplied complete with all necessary wiring and controls and motor starters.
   3. Connection of the power supply 600V, 3-phase, 60Hz to the skid control panel will be by others.
   4. Connection of the recycle inlet and outlet lines to the DAF cells will be by others.
   5. Three vertical, packed tower saturator(s) with two vertical packed towers as duty and one standby. Two duty recycle pumps and one standby pump shall be provided for the full

plant. Normally, two saturators will be in operation at times of maximum flow and air loading.

6. Each saturator vessel shall be a vertical, mild steel, tank designed and constructed in strict accordance with the ASME Boiler and Pressure Vessel Code Section VIII Division I for unfired pressure vessels. The vessel shall be epoxy lined and coated.
   a. The saturator shall be inspected and certified for a normal working pressure of at least 100 psi and to be operated at a normal maximum of 65 psi.
   b. Saturator surface loading shall not exceed 26.7 gpm/ft2 normal operation or 33 gpm/ft2when one saturator is out of operation.
   c. The saturation vessel inlet pipe shall enter the vessel 6" from the top of the vessel and shall include a means of evenly distributing the flow across the entire superficial area of the vessel.
   d. Saturated water shall collect at the bottom of the tank and be piped to the DAF cells using Schedule 80 PVC pipe work. Maximum flow velocity of the saturated recycle shall not exceed 2.5 fps.
   e. Each saturator shall be equipped with:
      1) A 1/2" air inlet line at the top of the saturator complete with air pressure regulator, air flow needle valve, manual isolation valve and solenoid operated air inlet valve.
      2) A flanged inlet with manual, lever operated butterfly valve for the recycle flow inlet.
      3) A pressure relief valve located on the top of the tank and set for 70 psi.
      4) Polypropylene packing of minimum depth 4 ft. above maximum water level. The packing shall maximize contact surface area between the recycle stream and air. The packing shall be of 1" nominal diameter, have a specific area of at least 200 ft^2/ft dry dumped pacing, and shall be of one of the following types:
         a) Tri-Pac (Jaeger Products, Inc.)
         b) Raschig Rings
         c) Pall Rings
         d) Suitable grating shall be provided to support the packing or prevent its loss through the recycle outlet line.
      5) A level-indicating transmitter, to provide a control signal for the control of the recycle inlet flow rate based upon the fluctuation of liquid level in the base of the saturation vessel.
      6) High and low level alarms to initiate a major plant alarm if the liquid level begins to flood the packed bed, or if the vessel is in danger of being completely drained of liquid.
      7) A normally open full-bore valve on the saturator recycle outlet line that shall close when de-energized due to power failure or low saturator water levels to retain full pressure within the saturator vessel.
      8) A glass tube, liquid level indicator.
      9) 1' wide x 3' access manhole in the side of the vessel.
      10) 1" drainpipe with manual ball valve.
      11) Inlet and outlet flanged connections.
   f. Recycle pumps shall be end suction, horizontal centrifugal type.
      1) The pump shall be driven using a variable frequency drive that is controlled by the liquid level in the pool at the base of the saturation vessel.
      2) Each recycle pump shall be rated for a minimum flow of 80 gpm at 185 total feet of head.
      3) Motors shall be 480 Volt / 3 Phase TEFC
      4) The Recycle Pump Motor shall be rated for a VFD.

g. Air for the DAF recycle system shall be provided using two, (one duty, one standby) oil-free, single stage reciprocation air compressors with integral surge vessel.
   1) Each air compressor shall be sized for no more than 10 minutes of operation each hour and shall be capable of delivering at least 160 SCFM of air to the saturation vessel at the saturator working pressure of 80 psi, in addition to the supply of all instrument air required in the plant. The air provided by the compressors must be oil-free.
   2) If an instrumentation air is required from the compressors, the instrument air supply shall be provided with a suitably sized air-drying system.

2.06 FILTER SYSTEM

A. General Information:
   1. Clarified water shall pass into (two) dedicated rapid gravity filters, with three filter compartments on each train. The dimensions of the filters are as shown on the procurement drawings.
   2. Design Parameters (with one filter in backwash mode):
      a. Each filter shall have a design flow of 314 gpm
      b. Maximum filtration rate at design flow 2.26 gpm/ft^2
      c. Maximum backwash rate 20 gpm/ft^2
      d. Maximum air scour rate 600 SCFM
   3. Each filter shall operate as a constant head filter with the effluent valve automatically modulation to maintain a set level within each filter.
   4. Each filter shall include the ability to filter to waste after each backwash.
   5. The filters will be supplied with factory installed manway to allow the inspection of underdrain nozzles without removing the filter media. Separate filter drains will be supplied as well.

B. Filter Media:
   1. Filter media shall be in accordance with AWWA B100, Section 2 and shall be placed in accordance with AWWA B 100, Section 3.
   2. Silica sand shall consist of hard, durable, and dense grains of predominantly siliceous material that will resist degradation during handling and use and shall be visually free of clay, dust, and micaceous and organic matter. Place silica sand in a single layer directly on the high-density sand.
   3. Anthracite coal shall consist of hard, durable anthracite particles of various sizes, visually free of clay, shale, and extraneous dirt. Place anthracite coal in a single layer directly on the silica sand.
   4. The filter shall be of the mixed media type with media arranged as follows:

Material	Depth from top of media (in)	Effective Size (mm)	Uniformity Coefficient	Specific Gravity
Anthracite	18"	1.0 to 1.1	Less than 1.4	1.55-1.75
Silica Sand (green sand)	24”	0.35 to .45	Less than 1.4	2.55-2.65

C. Filter Underdrain System:
   1. The filter underdrain system shall:
      a. Provide for uniform collection of filtered water and even distribution of backwash water and air scour across the full area of the filter bed. It shall be capable of accepting air scour, without further modification, even if this is not provided initially.

b. Ensure mal-distribution of the backwash flow and air scour does not exceed +/- 5%.
c. Be of plastic and/or marine grade aluminum construction. Stainless steel underdrains are not acceptable for use with marine grade aluminum tankage.
d. Underdrains shall be:
1) A nozzle/plenum design. Nozzles shall be of plastic construction and incorporate a diffuser with slots no wider than 0.2 mm. The nozzle spacing shall be on 6" centers. The plenum shall be not less than 18" in depth and shall extend over the full area of the filter. The plenum room shall be plane with no intrusions from supporting structures that could impede the even generation of the air/water interface within the plenum. An inspection access shall be provided into the plenum.

2. Filter underdrains must be factory installed and fabricated out of marine grade aluminum plate, piers, and appropriate Orthos nozzles. After market underdrains are not allowed. Underdrain installation at site is not allowed.
3. A pressure relief feature shall be provided to ensure the underdrain system is not over-pressurized and damaged during backwash in the event that the underdrain system plug or be subjected to extremely high backwash flow.

D. Filter Inlet and Discharge Connections:
1. Actuated valves shall be provided to isolate the effluent, backwash supply, backwash water, air scour and filter to waste lines as required during plant operation. The valves shall provide for manual override of the valve operation and shall indicate valve position. All valves shall fail closed on power failure. Effluent, waste, and backwash valves shall have modulating service by analog signal. Filter influent isolation shall be on/off service.
2. Waste backwash shall be collected in waste launders and run to waste. The launders shall be at not greater than 12' (3 m) centers and shall be located not more than 6'-6" (2 m) above the top of the media. If the backwash launders are normally flooded during filter operation, they shall be provided with actuated outlet valves.
3. A high-level switch shall be provided on the filter, to trigger backwash as terminal head loss is reached. The filter shall also incorporate an overflow drain with alarm, which shall divert all flow to the sewer and initiate a major plant alarm if the filter level rises above maximum allowable level.

2.07 VALVES (4-INCH AND LARGER)

A. A list of valves provided by the packaged water treatment plant equipment manufacturer can be found in Appendix 1 – Valve Schedule.

B. Valves, General:
1. Provide each valve with manufacturer’s name and rated pressure cast in raised letters on valve body
2. Provide valves with brass or Type 316 stainless steel nameplate attached with Type 316 stainless steel screws. Nameplates shall have engraved letters displaying the following minimum information:
a. Valve size.
b. Pressure and temperature ratings.
c. Application (other than water and wastewater).
d. Date of manufacture.
e. Manufacturer’s name.
3. Provide valves to turn clockwise to close, unless otherwise specified.
4. Provide valves with permanent markings for direction to open.

5. Manually operated valves, with or without extension stems, shall require not more than 40-pound pull on manual operator to open or close valve against specified criteria. Gear actuator and valve components shall be able to withstand minimum pull of 200 pounds on manual operator and input torque of 300-foot pounds to actuator nut. Manual operators include handwheel, chainwheel, crank, lever, and T-handle wrench.

C. Valve Materials:
   1. Valve materials shall be suitable for the associated valve's service or application, as shown.
   2. Protect wetted parts from galvanic corrosion caused by contact of different metals.
   3. Wetted components and wetted surfaces of valves used with potable water or water that will be treated to become potable shall conform to ANSI/NSF 61.
   4. Clean and descale fabricated stainless steel items in accordance with ASTM A380 and the following:
      a. Passivate all stainless steel welded fabricated items after manufacture by immersing in pickling solution of six percent nitric acid and three percent hydrofluoric acid. Temperature and detention time shall be sufficient for removing oxidation and ferrous contamination without etching surface. Perform complete neutralizing operation by immersing in trisodium phosphate rinse followed by clean water wash.
      b. Scrub welds with same pickling solution or pickling paste and clean with stainless steel wire brushes or by grinding with non-metallic abrasive tools to remove weld discoloration, and then neutralize and wash clean.

D. Valve Joints:
   1. Exposed Valves: Unless otherwise specified, provide with flanged ends conforming to ANSI B16.1. Pressure class of flanges shall be equal to or greater than specified pressure rating of the associated valve.
   2. For stainless steel bolting, except where nitrided nuts are required, use graphite-free anti-seize compound to prevent galling. Strength of joint shall not be affected by using anti-seize compound

E. Butterfly Valves:
   1. Manufacturers: Provide products of one of the following:
      a. DeZurik.
      b. Henry Pratt Company.
      c. Or equal.
   2. General:
      a. Provide butterfly valves conforming to AWWA C504 and as specified herein.
      b. Rated Working Pressure: 150 psig, Class 150B.
      c. Maximum Fluid Temperature: 150 degrees F.
      d. Valves shall provide drip-tight bi-directional shutoff at rated pressures.
      e. Mount valve seats in valve body. Rubber seats for 24-inch diameter and larger valves shall be replaceable in the field.
      f. Valves shall be capable of being maintained in open or partially open position for manual operation, and for automatic operation. When valve disc is maintained, there shall be no chatter or vibration of disc or operating mechanism.
      g. Valve packing shall be replaceable without dismantling valve.
      h. Disc shall be offset from shaft to provide uninterrupted 360-degree seat seal.

F. Materials of Construction: Materials of construction shall conform to AWWA C504 and shall be as follows:

1. Body: Cast-iron, ductile iron, or alloy cast-iron.
2. Shaft: Type 316 stainless steel.
3. Discs:
   a. Valves Smaller than 30-inch Diameter: Cast-iron.
   b. Valves 30-inch Diameter and Larger: Ductile iron.
4. Seats: Buna-N or other synthetic rubber suitable for the application.
5. Seating Surfaces: Type 316 stainless steel.
6. Bearings:
   a. Valves Smaller than 24-inch Diameter: Nylon.
   b. Valves 24-inch Diameter and Larger: Fiberglass with Teflon lining.
7. Shaft Seals: Externally adjustable, material same as for seats. For services that are either buried or submerged, self-adjusting V-type chevron, material same as for seats.
8. Tapered Pins for Attachment of Shaft to Disc: Type 316 stainless steel.
9. Internal and external bolting and other hardware; including pins, set screws, studs, bolts, nuts, and washers shall be Type 316 stainless steel.

G. Interior Coating: Valves shall be coated inside. Steel, cast-iron, and ductile iron surfaces, except machined surfaces, shall be epoxy-coated in accordance with AWWA C550.

H. Testing: Test each valve in the manufacturer's shop in accordance with AWWA C504.

I. Gear Actuators for Manual Valves:
   1. Provide gear actuators conforming to AWWA C540.
   2. Gear actuators for valves 20-inch diameter and smaller shall be constructed for 150 psi differential pressure and 16 feet per second port velocity.

2.08 ELECTRIC ACTUATORS (OPEN/CLOSE)

A. A list of actuators can be found in Appendix 1 – Valve Schedule.

B. Manufacturers: Provide products of one of the following:
   1. Limitorque.
   2. Rotork.
   3. Or equal.

C. Application Criteria:
   1. Ambient Temperature Rating: -20 to +158 degrees F.
   2. Ambient Humidity: 100 percent.
   3. Maximum Differential Pressures Across Closed Valves: Refer to Schedule of Valves with Electric Actuators at the end of this Section.
   4. Maximum Flows Through Full-Open Valves: Refer to Schedule of Valves with Electric Actuators located at end of this Section.
   5. Power Supply: 480-volt, three-phase, 60 Hertz.
   6. Control Voltage: 120 VAC, single phase, 60 Hertz.
   7. Torques: As determined by valve manufacturer.
   8. Duty Cycle: Sixty starts per hour, minimum.

D. General:
   1. Conform to AWWA C540 and this Section.
   2. Provide actuator operable with handwheel or chainwheel, even after disengaging and removing electric motor.

3. Provide valves with electric actuators that are located more than five feet above operating floor with separate control panels installed so that panel controls and indicators are approximately five feet above operating floor, at location approved by Engineer. Modify electrical wiring as required for remote location of control panels.
4. Coordinate sizing of each electric actuator with valve manufacturer, who shall furnish valve and associated electric actuator and appurtenances as a unit.
5. Electric actuators shall be suitable for valve orientation as shown.

E. Electric Motor:
1. General: Provide motors suitable for "open/close" service, with high torque characteristics and minimum 70 degree C temperature rating.
2. Motor Construction:
   a. Enclosure: NEMA 6.
   b. Insulation: Class F.
   c. Service Factor: 1.15.
   d. Power Supply: 480V/3 Phase/60Hz
   e. Motor Size: 1 horsepower (max).
   f. Provide winding thermostats for overcurrent protection.
   g. Efficiency: High-efficiency conforming to NEMA MG 1.
   h. Bearings: Anti-friction with minimum B-10 life of 100,000 hours, lifetime pre-lubricated and sealed.

F. Actuator Gearing:
1. Housing: Die-cast aluminum or cast-iron.
2. Close-coupled to electric motor.
3. Input Shaft Gearing: Spur or bevel gear assembly.
4. Output Shaft Gearing: Self-locking worm gears with minimum gear backlash to prevent valve disc chatter or vibration.
5. Gearing shall be of hardened alloy steel or combination of hardened alloy steel and alloy bronze, accurately cut by hobbing machine.
6. Lubrication: Grease or oil bath.
7. Bearings: Ball or roller with minimum B-10 life of 100,000 hours, lifetime pre-lubricated and sealed.
8. Input Shaft: Hardened alloy steel.
9. Provide mechanical stops adjustable to plus-or-minus five degrees at each end of travel.

G. Limit Switches:
1. Provide each actuator with "end of travel" limit switches to allow control of desired end position for each direction of travel.
2. Provide open and close limit switches geared to drive mechanism and in step at all times, whether unit is operated electrically or manually, and whether or not actuator is powered by electric power supply. Friction devices or set-screw arrangements shall not be used to maintain the setting.
3. Limit switch gearing shall be appropriately lubricated.
4. Provide driven mechanism totally enclosed to prevent entrance of foreign matter and loss of lubricant.
5. Provide each limit switch with four auxiliary contacts. Two contacts shall close and two contacts shall open at a desired end position for each direction of travel.
6. Switches shall be rated five amperes at 120 volts.

H. Torque Switches:
   1. Provide adjustable torque switches with each valve actuator. Torque switches shall operate during complete valve cycle without using auxiliary relays, linkages, latches, or other devices.
   2. Wire torque switches to de-energize valve actuator motor when excessive torque is developed during each direction of travel.
   3. It shall be possible to select the torque switches to control open and close limit positions in each direction of valve travel.
   4. Provide dry contacts (five-amp, 120 VAC) for remote high torque alarm.

I. Handwheel and Chainwheel Operation:
   1. Provide actuator with handwheel (or chainwheel as required) for manual operation, so connected that operation by motor will not cause handwheel or chainwheel to rotate.
   2. Should electric power be returned to motor while handwheel or chainwheel is in use, unit shall prevent transmission of motor torque to handwheel or chainwheel.
   3. Handwheel or chainwheel shall require no more than 80-pound effort on rim for seating or unseating load, and no more than 60 pounds on running load.
   4. Handwheel or chainwheel shall have an arrow and the word "OPEN" or "CLOSE" indicating required rotation. Handwheel or chainwheel shall operate in clockwise direction to close.
   5. Chain Operators:
      a. Valves more than five feet above operating floor level shall be equipped with chain operators.
   6. Handwheels and chain operators shall be as specified in Article 2.11 of this Section.
   7. Provide stem covers for rising stem gate valves as specified in Article 2.11 of this Section.

J. Controls:
   1. Provide the following controls in separate compartment integral with actuator.
   2. Enclosure: NEMA 6.
   3. Starter: Combination reversing magnetic starter with circuit breaker and disconnect switch.
   4. Control Power Transformer: Provide transformer to transform rated three-phase, 60 Hertz power to 120 volts, single-phase. Transformer shall be complete with grounded and fused secondary and dual primary fuses.
   5. Provide "LOCAL/OFF/REMOTE" selector switch. In "LOCAL" position actuator shall be operated by "OPEN/CLOSE/STOP" pushbuttons. In "OFF" position, actuator shall be disabled from local and remote operation. In "REMOTE" position, "open/close/stop" control from remote source shall be enabled.
   6. Provide "OPEN/CLOSE/STOP" pushbuttons with hold-to-run or momentary contact selection.
   7. Provide "OPEN/CLOSE/STOP" indicating lights and zero-to-100 percent position indication in liquid crystal display window.
   8. Provide thermal overload and single-phasing protection of motor.
   9. Provide set of dry contacts to remotely indicate that actuator is available for remote operation.
   10. Actuator circuit boards shall be rated for high temperature service, min. 55 degrees C.
   11. Provide electrical interlocks as shown.
   12. Provide 120 VAC space heater to maintain internal housing temperature at 20 degrees C.

K. Remote-mounted Control Stations:
   1. Where required by valve location or as indicated, provide remote control panels.

2. Enclosure: NEMA 4X, Type 316 stainless steel.
3. Provide "LOCAL/OFF/REMOTE" selector switch. In "LOCAL" position actuator shall be operated by "OPEN/CLOSE/STOP" pushbuttons. In "OFF" position, actuator shall be disabled from local and remote operation. In "REMOTE" position, "open/close/stop" control from remote source shall be enabled. Provide contact when switch is in "REMOTE" position for remote indication.
4. Provide "OPEN/CLOSE/STOP" pushbuttons with hold-to-run or momentary contact selection.
5. Provide "OPEN/CLOSE/STOP" indicating lights and zero-to-100 percent position indication with liquid crystal display.

L. Testing: Test each actuator in manufacturer's shop in conformance with AWWA C540.

2.09 ELECTRIC ACTUATORS (MODULATING)

A. A list of actuators can be found in Appendix 1 – Valve Schedule.

B. Manufacturers: Provide products of one of the following:
1. Limitorque.
2. Rotork.
3. Or equal.

C. Application Criteria:
1. Ambient Temperature Rating: -20 to +158 degrees F.
2. Ambient Humidity: 100 percent.
3. Maximum Differential Pressures across Closed Valves: Refer to Schedule of Valves with Actuators located at the end of this Section.
4. Maximum Flows Through Full Open Valves: Refer to Schedule of Valves with Actuators located at the end of this Section.
5. Duty Cycle: Continuous (minimum 1,200 starts/stops per hour), unless otherwise specified.
6. Power Supply: 480 VAC, three-phase, 60 Hertz.
7. Control Voltage: 120 VAC, single-phase, 60 Hertz.
8. Torque: As recommended by valve manufacturer.
9. Accepts 4 to 20 mADC input to positioner.

D. General:
1. Conform to AWWA C540 and this Section.
2. Provide actuator operable with handwheel even after electric motor has been disengaged and removed.
3. Provide each valve with electric actuators located more than five feet above operating floor with separate control panel installed with controls and indicators approximately five feet above operating floor at location approved by Engineer. Modify electrical wiring as required for remote location of control panels.
4. Coordinate sizing of each electric actuator with valve manufacturer who shall furnish valve and electric actuator as a unit.
5. Electric actuators shall be suitable for valve orientation shown.

E. Electric Motor:
1. General: Provide motors suitable for modulating service, of high torque characteristics and minimum 70 degrees C temperature rating.
2. Motor Construction:
a. Enclosure: NEMA 6.

b. Insulation: Class H.
c. Service Factor: 1.15.
d. Power Supply: 480V/3 Phase/60Hz
e. Motor Size: 1 horsepower (max).
f. Provide winding thermostats for overcurrent protection.
g. Efficiency: High-efficiency conforming to NEMA MG 1.
h. Bearings: Anti-friction, B-10 life of 100,000 hours, lifetime pre-lubricated and sealed.

F. Actuator Gearing:
1. Housing: Die-cast aluminum.
2. Close-coupled to electric motor.
3. Input Shaft Gearing: Spur or bevel gear assembly.
4. Output Shaft Gearing: Self-locking worm gears with minimum gear backlash to prevent valve disc chatter or vibration.
5. Gearing shall be of hardened alloy steel or combination of hardened alloy steel and alloy bronze, accurately cut by hobbing machine.
6. Lubrication: Grease or oil bath.
7. Bearings: Ball or roller with minimum B-10 life of 100,000 hours, lifetime pre-lubricated and sealed.
8. Input Shaft: Hardened alloy steel.
9. Provide mechanical stops adjustable to plus-or-minus five degrees at each end of travel.
10. Provide mechanical position indication.

G. Limit Switches:
1. Provide each actuator with "END OF TRAVEL" limit switches to allow control of desired end position for each direction of travel.
2. Provide "OPEN" and "CLOSE" limit switches geared to drive mechanism and in step at all times, whether unit is operated electrically or manually and whether or not actuator is electrically powered. Friction devices or set-screw arrangements shall not be used to maintain setting.
3. Limit switch gearing shall be appropriately lubricated.
4. Provide drive mechanism totally enclosed to prevent entrance of foreign matter or loss of lubricant.
5. Provide each limit switch with four auxiliary contacts. Two contacts shall close and two contacts shall open at desired end position for each direction of travel.
6. Switches shall be rated five amperes at 120 VAC.

H. Torque Switches:
1. Provide adjustable double-torque switches with valve actuator.
2. Torque switches shall operate during complete valve cycle without using auxiliary relays, linkages, latches, or other devices.
3. Wire torque switches to de-energize valve actuator motor when excessive torque is developed during each direction of travel.
4. It shall be possible to select torque switches to control open and close limit positions in each direction of valve travel.
5. Provide dry contacts (five-amp, 120 VAC) for remote high torque alarm for automatically controlled valves.

I. Handwheel and Chainwheel Operation:
1. Equip actuator with and wheel or chainwheel for manual operation, so connected that operation by motor will not cause handwheel or chainwheel to rotate.

2. Should power be returned to motor while handwheel or chainwheel is in use, unit shall prevent transmission of motor torque to handwheel or chainwheel.
3. Handwheel or chainwheel shall require no more than 80-pound effort on rim for seating or unseating load, and no more than 60-pound effort on running load.
4. Handwheel or chainwheel shall have an arrow and word "OPEN" or "CLOSE" indicating required rotation. Handwheel or chainwheel shall operate in clockwise direction to close.
5. Chain Operators:
   a. Provide valves located more than five feet above operating floor with chain operators.
6. Handwheels and chain operators shall be as specified in Article 2.11 of this Section.

J. Controls:
1. Provide following controls in a separate compartment integral with the actuator.
2. Enclosure: NEMA 6.
3. Starter: Combination reversing magnetic starter with circuit breaker and disconnect switch.
4. Control Power Transformer: Provide transformer to transform rated three-phase, 60 Hertz power to 120 volts, single-phase. Transformer shall be complete with grounded and fused secondary and dual primary fuses.
5. Provide "LOCAL/OFF/REMOTE" selector switch. In "LOCAL" position actuator shall be operated by "OPEN/CLOSE/STOP" pushbuttons. In "OFF" position, actuator shall be disabled from local and remote operation. In "REMOTE" position, "open/close/stop" control from remote source shall be enabled.
6. Provide "OPEN/CLOSE/STOP" pushbuttons with hold-to-run or momentary contact selection.
7. Provide "OPEN/CLOSE/STOP" indicating lights and zero-to-100 percent position indication in liquid crystal display window.
8. Motor shall be de-energized when valve is jammed.
9. Provide thermal overload and single phasing protection of motor.
10. For monitoring of actuator, provide set of single-pole/double-throw (SPDT) dry contacts. Monitor relay shall indicate that actuator is available for remote operation.
11. Provide each actuator with position controller. Controller shall have the following features:
    a. Receive 4 to 20 mADC analog control signal and position valve in proportion to this signal.
    b. Adjustments for duty cycle, band width, span, and zero.
    c. On loss of control signal valve shall stay in its last position.
    d. Provision for adequate cooling of actuator.
12. Provide actuator with position transmitter capable of producing 4 to 20 mADC output signal. Transmitter shall be standard slidewire (potentiometer) position transducer providing an output corresponding to zero-to-100 percent of travel. Accuracy shall be plus-or-minus one percent of scale. Transmitter shall include integral temperature-compensated, constant-voltage source for slidewire excitation. Transmitter shall be integral to actuator.
13. Supply actuator with circuit boards for high temperature service, minimum 55 degrees C.
14. Provide 120 VAC space heaters to maintain internal housing temperature at 20 degrees C.

K. Remote-mounted Control Stations:
1. Where required by valve location or as indicated, provide remote control panels.
2. Enclosure: NEMA 4X, Type 316 stainless steel.
3. Provide "LOCAL/OFF/REMOTE" selector switch. In "LOCAL" position actuator shall be operated by "OPEN/CLOSE/STOP" pushbuttons. In "OFF" position, actuator shall be

disabled from local and remote operation. In “REMOTE” position, “open/close/stop” control from remote source shall be enabled Provide contact when switch is in “REMOTE” position for remote indication.

4. Provide “OPEN/CLOSE/STOP” pushbuttons with hold-to-run or momentary contact selection.
5. Provide “OPEN/CLOSE/STOP” indicating lights and zero-to-100 percent position indication with liquid crystal display.

L. Testing: Test each actuator in manufacturer’s shop in conformance with AWWA C540.

2.10 APPURTENANCES FOR EXPOSED METALLIC VALVES

A. General:
1. For valves located less than five feet above operating floor, provide levers on four-inch diameter quarter-turn valves, and provide handwheels on all other valves, unless otherwise shown or specified.
2. For valves located five feet or more above operating floor, provide chain operators.
3. Where indicated, provide extension stems and floorstands.

B. Handwheels:
1. Conform to applicable AWWA standards.
2. Material of Construction: Ductile iron, or cast aluminum.
3. Arrow indicating direction of opening and word “OPEN” shall be cast on trim of handwheel.
4. Maximum Handwheel Diameter: 2.5 feet.

C. Chain Operators:
1. Chains shall extend to three feet above operating floor.
2. Provide 1/2-inch stainless steel hook bolt to keep chain out of walking area.
3. Materials of Construction:
   a. Chain: Type 316L stainless steel.
   b. Chainwheel: Recessed groove type made out of Type 316 stainless steel.
   c. Guards and Guides: Type 316L stainless steel.
4. Chain Construction: Chain shall be of welded link type with smooth finish. Chain that is crimped or has links with exposed ends is unacceptable.
5. Provide geared operators where required to position chainwheels in vertical position.

D. Crank Operator:
1. Crank operator shall be removable and fitted with rotating handle.
2. Maximum Radius of Crank: 15 inches.
3. Materials:
   a. Crank: Cast-iron or ductile iron.
4. Handle: Type 304 stainless steel.
5. Hardware: Type 304 stainless steel.

2.11 WATER QUALITY MONITORING

A. The Contractor shall provide Raw Water Quality Monitoring Equipment.

B. Packaged Water Treatment Plant Equipment Manufacturer shall provide the following instrumentation.
1. Rapid Mix Unit Radar Level Sensor
2. DAF Unit Level Sensor
3. All instrumentation necessary for Flocculation/ DAF unit to operate

4. Recirculation System Instrumentation
a. Magnetic Flowmeter
b. Suction Pressure Indicator
c. Suction Pressure Gauge
d. Suction Pressure Switch Low
e. Discharge Pressure Indicator
f. Discharge Pressure Gauge
g. Discharge Pressure Switch High
5. Air Compressor Pressure Indicator
6. Air Compressor Pressure Switch High
7. Filter Unit Level Sensor (one per filter, 6 total)
8. Filter Unit Turbidimeter (one per filter, 6 total)
9. Filter Unit Differential Pressure Indicator

C. Provide instrumentation from the following list of approved instrumentation manufacturers
1. Radar Level Sensor: Vegapuls 61, or equal.
2. Magnetic Flowmeter: Endress+Hauser 400W, or equal.
3. Pressure Gauge: WIKA 213.53DW, or equal.
4. Pressure Indicating Transmitter: WIKA A-10 or equal
5. Pressure Switch: WIKA, or Ashcroft B-series, or equal.
6. Turbidimeter: Hach TU5300sc, model LXV445.99.53112, or equal.
7. Differential Pressure Gauge: WIKA, or Ashcroft 1127, or equal.

D. All sensors shall provide for local indication of the relevant parameter and 4-20 mA outputs shall be relayed to the Packaged Water Treatment Plant Equipment Manufacturer provided PLC for display on the operator interface.

2.12 CONTROLS

A. The package plant shall be supplied complete with integral PLC based control panels and remote I/O control panels located on the package plant structure. The control panels shall be factory assembled and pre-wired.

B. The PLC shall be an Allen Bradley 1760 L33ER CompactLogix, no substitutions.

C. The PLC control panel shall be supplied complete with the following:
1. Allen Bradley 1769-L33ER as specified in 2.08(B).
2. Allen Bradley 1794-AENT Flex I/O adapter and 1794 terminal bases and I/O cards, as required.
3. Allen Bradley PanelView touchscreen operator interface with a 15-inch touch screen.
4. Uninterruptible VDC power supply.
5. Ethernet switch.
6. All necessary programming.
7. Pre-wired to terminals identified for field connection.

D. Each remote I/O panel shall be supplied complete with the following:
1. Allen Bradley 1794-AENT Flex I/O adapter and 1794 terminal bases and I/O cards, as required.
2. Uninterruptible 24VDC power supply.
3. All necessary programming.

E. Each control panel shall have a main circuit breaker for 120VAC control power. Additionally, each panel shall have, at a minimum, dedicated breakers for the following components:
   1. PLC, if applicable and 1794-AENT Flex I/O adapter.
   2. HMI touchscreen, if applicable.
   3. Input Flex I/O cards.
   4. Output Flex I/O cards.

F. The PLC control panel and all remote I/O control panels shall use only 1794 series Flex I/O cards. The PLC panel and remote I/O control panels shall not use any 1769 series chassis-based I/O cards.
   1. All digital inputs and outputs shall be 24VDC.
   2. All digital output connections shall use interposing 24VDC relays.
   3. All digital output connections shall be pre-wired to terminals identified for field connections.
   4. All other connections can be directly wired to 1794 Flex I/O card bases.

G. All internal control panel wire gutter shall be at least 2" wide.

H. The control system shall provide the following features:
   1. Provide dry contacts to start/stop the raw water pumps, (or open/close valves).
   2. Automatic start / stop of plant from external start / stop signal. The DAF recycle system, float skimmer, and flocculator mixer drives shall be operated continuously.
   3. Start / stop of raw water flow based on clearwell level and train backwashing status. Or automatic control of influent raw water flow, based upon adjustable set point value.
   4. Automatic initiation and control of filter backwashing.
   5. Manual initiation and control of the filter backwash sequences.
   6. Dry contacts for status/alarm indication as initiated by high and/or low conditions sensed by all provided level monitoring instrumentation, including but not limited to water levels and air pressure levels as applicable. Additionally include dry contacts for remote monitoring of any equipment fault or alarm conditions.
   7. Automatic shutdown of plant and alarm indication as initiated by extreme high and/or extreme low conditions sensed by all on-line water quality monitors.

I. Control system will control and monitor all VFDs and motor starters solely via the Ethernet network using the Ethernet/IP protocol.
   1. Control includes start, stop and speed commands and any other commands required to run the system.
   2. There will be no wiring between the PLC panel and remote I/O panels and any VFDs or motor starters.

J. As a minimum, the following control switches and indicators shall be provided:
   1. Plant Hand/Off/Auto (in auto mode, plant operates automatically upon external start signal).
   2. Flocculator and Rapid Mixer Motors: Manual override of normal auto operation.
   3. DAF Float Skimmer: Manual override of the normal auto operation.
   4. DAF Recycle System: Run indicator lamps for recycle pumps, level indication on the saturator vessels.
   5. Backwash counters for each filter.

K. Easy adjustment, via operator interface, of each of the various time intervals within the sequence for backwashing the filter.

L. The control system shall include for all necessary relays, time, indicators, and controls necessary to obtain the specified modes of operation.

M. The control system shall include a list of all PLC tags required to duplicate the HMI screen in a separate SCADA system. Each tag must include the PLC address, data type and a brief description of the tag's role in controlling or monitoring the control system.

N. The control panel enclosures shall be mounted NEMA 4X.

2.13 ACCESS PLATFORMS

A. The plant shall be supplied complete with elevated access walkways, stairs and ships ladders as shown generally on the drawings.

B. Walkways shall be aluminum construction with open mesh type flooring and integral kick plate and hand railing.

C. Walkway floor elevation shall be at least 36" below the top of the plant side wall. The walkway width shall be as shown on the procurement drawings

D. Stair treads and gratings shall be aluminum grating, serrated style. Grating shall carry a live load of 100 lbs/ft^2 with a deflection of less than 1/4".

E. The maximum weight of each grating section shall not exceed 66 lbs/ 30kg.

F. Hand railing shall conform to CSA S157/OSHA, alloy GM41 for aluminum sections. All intermediate posts and all rail shall be 1-1/4" (31 mm) internal diameters, Schedule 40. All end poses shall be 1-1/4" (31 mm) internal diameter, Schedule 80. Fitting shall be fabricated from similar material to the posts and railings, and shall be fixed by welding, setscrews, or both.

PART 3 EXECUTION

3.01 GENERAL

A. The packaged water equipment plant manufacturer provide all pre-construction submittals to the Engineer and Owner within 4 weeks of contract award.

B. The packaged water equipment plant manufacturer shall:
1. Provide all pre-construction submittals to the Engineer and Owner within 4 weeks of contract award.
2. Attend the Construction Contractor's Pre-Construction Meeting
3. Provide coordination with the construction contractor throughout the pre-construction and construction period.
4. Coordinate Delivery of Equipment to match the Construction Contractor's schedule.

3.02 INSTALLATION

A. The plant shall be installed in accordance with the manufacturer's written recommendations.

B. Each train shall be placed on a level, concrete pad provided by others. The pad level shall not vary by more than +/- 1/4" (6 mm).

C. Each train shall be bedded on a full area, coal tar or asphaltic base mastic compound or heavy-duty polyethylene sheeting applied to the surface of the concrete base pad.

D. All work shall be carried out in accordance with applicable federal, state, and AWWA standards and regulations.

E. Welding, pipe fittings and electrical assembly shall be performed by qualified, certified tradesmen.

3.03 MANUFACTURER'S REPRESENTATIVE

A. Prior to start up and commissioning, the packaged water treatment plant equipment manufacturer shall provide a single trip to check the status of all equipment for proper installation and operator training. Onsite Operator Training shall be provided prior the start up period.
   1. The Engineer and Contractor shall provide two weeks written notice to the packaged water treatment plant equipment manufacturer prior to the equipment status check and operator training trip.
   2. Prior to the trip, the Engineer and Contractor will conduct equipment functional testing to ensure that all equipment has been installed correctly.
   3. During the site visit, the packaged water treatment plant equipment manufacturer representative shall observe the following:
      a. Rapid Mix System Operational Demonstration.
      b. Flocculation System Operational Demonstration.
      c. DAF System Process Performance Test.
      d. Backwash Flow Distribution Test.
   4. At the end of the equipment status check trip, the engineer, contractor, and equipment manufacturer shall sign a memorandum of understanding that the packaged water treatment plant equipment has been installed correctly and the system is ready for start up and commissioning.

B. The packaged water treatment plant manufacturer's representative shall assist with onsite start up and commissioning for a minimum of 7 days.
   1. Following the successful start up and commissioning 7 day period, the packaged water treatment plant equipment manufacturer shall issue a memorandum documenting the start up and commissioning process and water quality produced during the period.
   2. If the packaged water treatment plant is unable to meet finished water quality specifications, a subsequent 7 day start up and commissioning trips will be required at no cost to the City or Contractor until the water treatment plant is able to meet performance requirements
   3. The packaged water treatment plant manufacturer's representative shall inspect the plant and certify in writing that it has been installed in accordance with the manufacturer's recommendations.

C. After project completion, the packaged water treatment plant equipment manufacturer shall provide remote support.
   1. The packaged water treatment plant equipment manufacturer shall provide remote PLC troubleshooting support for up to one year after project completion at no cost to the City.

APPENDIX NO. 1 – VALVE SCHEDULE

Name	Location	Size (inches)	Type	Actuation	Notes
DAF Units Valves					
Raw Water Inlet	DAF No. 1	10	BFV	Electric – Open/Close	
Clarified Water Discharge	DAF No. 1	10	BFV	Manual – Handwheel	
DAF Sludge Discharge	DAF No. 1	4	BFV	Manual – Handwheel	
DAF Discharge Recycle	DAF No. 1	6	BFV	Manual – Handwheel	
DAF Inlet Recycle	DAF No. 1	4	BFV	Manual – Handwheel	
DAF Drain	DAF No. 1	2	Ball valve	Manual - Lever	6 located on bottom of each DAF
Raw Water Inlet	DAF No. 2	10	BFV	Electric – Open/Close	
Clarified Water Discharge	DAF No. 2	10	BFV	Manual – Handwheel	
DAF Sludge Discharge	DAF No. 2	4	BFV	Manual – Handwheel	
DAF Discharge Recycle	DAF No. 2	6	BFV	Manual – Handwheel	
DAF Inlet Recycle	DAF No. 2	4	BFV	Manual – Handwheel	
DAF Drain	DAF No. 2	2	Ball valve	Manual - Lever	6 located on bottom of each DAF
Raw Water Inlet	DAF No. 3	10	BFV	Electric – Open/Close	
Clarified Water Discharge	DAF No. 3	10	BFV	Manual – Handwheel	
DAF Sludge Discharge	DAF No. 3	4	BFV	Manual – Handwheel	
DAF Discharge Recycle	DAF No. 3	6	BFV	Manual – Handwheel	
DAF Inlet Recycle	DAF No. 3	4	BFV	Manual – Handwheel	
DAF Drain	DAF No. 3	2	Ball valve	Manual - Lever	6 located on bottom of each DAF
Filter Units Valves					
Filter Inlet	Filter No. 1	8	BFV	Electric Open/Close	
Finished Water	Filter No. 1	6	BFV	Electric – Modulating	
Backwash Water	Filter No. 1	12	BFV	Electric Open/Close	
Filter to Waste	Filter No. 1	8	BFV	Electric Open/Close	
Filter Air Scour	Filter No. 1	4	BFV	Electric Open/Close	
Filter Drain	Filter No. 1	2	Ball Valve	Manual	

Name	Location	Size (inches)	Type	Actuation	Notes
Filter Inlet	Filter No. 2	8	BFV	Electric Open/Close	
Finished Water	Filter No. 2	6	BFV	Electric – Modulating	
Backwash Water	Filter No. 2	12	BFV	Electric Open/Close	
Filter to Waste	Filter No. 2	8	BFV	Electric Open/Close	
Filter Air Scour	Filter No. 2	4	BFV	Electric Open/Close	
Filter Drain	Filter No. 2	2	Ball Valve	Manual	
Filter Inlet	Filter No. 3	8	BFV	Electric Open/Close	
Finished Water	Filter No. 3	6	BFV	Electric – Modulating	
Backwash Water	Filter No. 3	12	BFV	Electric Open/Close	
Filter to Waste	Filter No. 3	8	BFV	Electric Open/Close	
Filter Air Scour	Filter No. 3	4	BFV	Electric Open/Close	
Filter Drain	Filter No. 3	2	Ball Valve	Manual	
Filter Inlet	Filter No. 4	8	BFV	Electric Open/Close	
Finished Water	Filter No. 4	6	BFV	Electric – Modulating	
Backwash Water	Filter No. 4	12	BFV	Electric Open/Close	
Filter to Waste	Filter No. 4	8	BFV	Electric Open/Close	
Filter Air Scour	Filter No. 4	4	BFV	Electric Open/Close	
Filter Drain	Filter No. 4	2	Ball Valve	Manual	
Filter Inlet	Filter No. 5	8	BFV	Electric Open/Close	
Finished Water	Filter No. 5	6	BFV	Electric – Modulating	
Backwash Water	Filter No. 5	12	BFV	Electric Open/Close	
Filter to Waste	Filter No. 5	8	BFV	Electric Open/Close	
Filter Air Scour	Filter No. 5	4	BFV	Electric Open/Close	
Filter Drain	Filter No. 5	2	Ball Valve	Manual	
Filter Inlet	Filter No. 6	8	BFV	Electric Open/Close	
Finished Water	Filter No. 6	6	BFV	Electric – Modulating	
Backwash Water	Filter No. 6	12	BFV	Electric Open/Close	
Filter to Waste	Filter No. 6	8	BFV	Electric Open/Close	
Filter Air Scour	Filter No. 6	4	BFV	Electric Open/Close	
Filter Drain	Filter No. 6	2	Ball Valve	Manual	

END OF SECTION

SECTION 46 33 13 - SODIUM HYPOCHLORITE GENERATING EQUIPMENT

PART 1 – GENERAL

1.01 DESCRIPTION

A. Scope

1. This Section covers the work necessary by the Contractor, On-site Sodium Hypochlorite Generation System (OSHGS) Supplier, Owner, and Engineer, to furnish, install, test, and make ready for operation an On-site Sodium Hypochlorite Generation System.

2. The Generation System includes but is not limited to the Sodium Hypochlorite Generator Skid with integral piping, valves, system control cabinet with PLC, Water Softener, bulk salt/brine tank, hypochlorite solution storage tank, commercial strength hypochlorite dilution panel, piping, valves, ancillary equipment as specified herein, related testing, start-up and training services.

3. The OSHGS Supplier shall furnish an entire OSHGS consisting of the following major components:

a. Sodium Hypochlorite Generation cells
b. Control cabinet, PLC, VFD's, networking communication components, and associated equipment
c. Hydrogen Dilution System
d. Water Softeners & Cartridge Filters
e. Brine Tank and accessories
f. Sodium hypochlorite storage tanks and accessories
g. Acid cleaning Cart/System
h. Feed Water Booster Pumps
i. Feed Water Pressure Tank (if required)
j. Feed Water Heat Exchangers
k. Bulk Hypochlorite dilution panel
l. Spare parts

B. System Description

1. Each On-site Sodium Hypochlorite Generation System (OSHG) shall consist of rack-mounted sodium hypochlorite generation cells, solenoid control valves, an electrical control panel, a transformer rectifier, brine tank, a brine feed pump, a sodium hypochlorite storage tank, and hydrogen dilution system. The OSHG system shall include common potable water feed booster pumps (duty/standby) and a dual tank water softener, both sized for simultaneous operation of each OSHG system. The OSHGS shall generate an aqueous solution of a minimum concentration of 0.75 percent (±0.05%) by weight sodium hypochlorite expressed as chlorine. The minimum capacity shall be demonstrated to be equal to the capacity specified for each installation while not exceeding the maximum aggregate raw material quantities specified below.

2. The system shall be designed for the following operating conditions:

SYSTEM I.D.	GENERATION CAPACITY*	STORAGE CAPACITY^
01	20	24
02	20	24

*Expressed as pounds per day (PPD) free available chlorine (FAC)
^Expressed as hours storage capacity

3. The electrolytic cell shall consume 2.5-3.5 pounds of salt per pound of chlorine equivalent output, using solar salt containing no additives (organic binders, flow control agents, resin cleaning material, etc.), and meeting the following specifications:

COMPONENT	WEIGHT
Sodium Chloride (dry basis)	99.7% minimum
Insolubles	0.15% maximum
Surface Moisture	0.20% maximum

4. The electrolytic cell shall consume 1.8-2.4 AC kilowatt-hours of electricity per pound of chlorine equivalent output.

5. Expected water consumption will be in the range of 14.0-17.0 gallons per pound of chlorine equivalent output. Water temperature must measure between 55 °F and 78 °F. Higher temperature water will result in lower system efficiency and higher total consumable units. A minimum of 50 psig water pressure is required at the inlet to the water softener. The raw water supply to the softener must be potable. The raw water supply to the softener must meet or exceed the following specifications:

COMPONENT	SPECIFICATION
pH	6.5 – 8.5
Cl	2 ppm by wt. maximum
Total Silica (as SiO2)	2 ppm by wt. maximum
Ba	100 ppb by wt. maximum
Fe	200 ppb by wt. maximum
Mn	10 ppb by wt. maximum
Al	1 ppm by wt. maximum
Ni	20 ppb by wt. maximum
F^-	2 ppm by wt. maximum
Cu	5 ppb by wt. maximum
Organics (as grease or oil)	2 ppm by wt. maximum

TOC	1 ppm by wt. maximum

6. Generator performance is to be measured as a function of total consumption for salt and power. Expected ranges of consumption for salt will be 2.5-3.5 pounds of salt and 1.8-2.4 KWH per pound of equivalent chlorine (PE). Product concentrations will be in the range of 0.75% ± 0.05%.

    a. Performance will be measured as the sum of the unit measurements for salt (PPE) and power (KWHPPE) and will not exceed 6.0 consumable units. Example: salt consumption at 3.0 PPE and 2.0 KWHPPE will measure 5.0 consumable units and will be considered proper performance.
    b. Note that electrolytic cells require an initial acclimation period of approximately 300 operational hours. Performance measured before the cells have completed this exercise may not satisfy specification requirements. Water softener salt consumption and or chiller or heater power consumption shall be excluded from performance calculations.

7. The only liquid waste product allowed from the OSHGS will be the periodic backwash discharge from the water softener.

1.02 RELATED SECTIONS

A. All electrical, mechanical, metal, painting and instrumentation work included herein shall conform to the applicable Sections or Divisions of this project except as otherwise shown or specified.

1.03 QUALITY ASSURANCE

A. OSHG System Supplier Requirements

1. All equipment provided under this section shall be obtained from a single manufacturer, who shall:

    a. Assume full responsibility for the completeness and proper operation of the OSHG.
    b. Have experience, be reputable, and be qualified in designing and manufacturing on-site hypochlorite generation equipment.
    c. Have current NSF Standard 61 Certification for the generation skid being offered.
    d. Have at least 15 years' experience with on-site sodium hypochlorite generation equipment ranging in capacity from 20 to 2400 pounds per day of 100% chlorine equivalent.
    e. Supply units containing all necessary appurtenances and components for a complete and operating system conforming to this specification. The OSHG System shall be pre-assembled, piped, and factory-tested to assure compliance with all operational requirements. The OSHG System shall be shipped as a single unit. Loose hypochlorite generation components shall not be acceptable. No field assembly or wiring will be permitted with the exception of external conduits. Equipment footprint as shown on the drawings shall not be exceeded.
    f. Have at least ten similar OSHG Systems in operation for at least five years.

2. To ensure quality and complete unit responsibility, the OSHG must be assembled and inspected by the OSHGS Supplier at its facility. The complete OSHG must be a standard and regularly-marketed product of that manufacturer. The OSHG Supplier must have physical plant, technical and design staff, and fabricating personnel to complete the work specified.

3. The Owner reserves the right to be present at the fabricator's facility for visual inspection of equipment to be supplied.

B. Specified Manufacturer

1. On-site Sodium Hypochlorite Generation System shall be Microclor® as manufactured and supplied by PSI Water Technologies, Inc., Campbell, California, (408) 370-6540, or Engineer approved equal.
2. Microclor® is the basis of design. Contractors are responsible for all additional costs associated with selection, design, and installation of an alternate manufacturer, including revision of Contract Drawings (mechanical, process, etc.).

C. Warranty

1. Prior to acceptance of the Sodium hypochlorite generator system, the Contractor shall provide written warranty from the OSHGS Supplier that includes the following statements:

    a. OSHGS Supplier has inspected the installation during and after completion and the sodium hypochlorite generator system is free from faults and defects and is in conformance with the Contract Documents.
    b. The warranty period shall start from the date of commissioning of the system or 6 months after shipment, whichever comes sooner.
    c. Principal components of the sodium hypochlorite generator system will remain free of defects for a period of three (3) years from the date of final acceptance and all other equipment supplied for one (1) year.
    d. The electrolytic cells including cell body shall have a three (3) year full replacement warranty and a prorated straight-line replacement warranty for years 4-7 from the date of final acceptance.

D. Pre-Approval Submittals

1. Each supplier submitting an alternate to the equipment defined herein shall provide the following submittals 20 days prior to the established bid date. Failure to provide a complete and thorough submittal package shall render their preapproval request non-responsive and will not be considered. Approval of manufacturers will be at the sole interpretation of the Engineer. A blanket statement that equipment proposed will meet all requirements will not be sufficient to establish equivalence to the specified manufacturer(s). If requested by the Engineer, the supplier must be prepared to demonstrate a unit similar to the one proposed. The following information is required:

    a. A complete set of drawings as described in Section 1.03.E. Provide a minimum of one drawing per system clearly showing how the proposed system will fit on the site.
    b. A reference list of no less than then ten installations of the type and size of system proposed. The installations must have been in service for a

minimum of five years. The list shall include the following information: Owner name and accurate contact information, placed in service date, and design conditions including generation capacity. Provide graphical performance data from a minimum of ten systems showing that the raw materials consumption levels satisfy the requirements of Section 1.01.B. Failure to submit references for similar systems may deem the pre-approval request "non-responsive" and will be rejected without further review.

c. If the alternate OSHGS Supplier's hydrogen handling and safety equipment design differs in any way from Section 2.02, they must submit a statement signed by a corporate officer stating they have never had a hydrogen related cell rupture incident. Failure to submit this statement may deem the request for pre-approval "non-responsive" and will be rejected without further review.

d. It shall be the supplier's responsibility to carefully examine each item of the specifications. Failure to offer a complete submittal or failure to respond to each section of the technical specifications will cause the pre-approval to be rejected without further review as "non-responsive." All exceptions and/or deviations shall be fully described in the appropriate section. Deceit in responding to the specifications will be cause for automatic rejection. The supplier must include a separate sheet listing any and all deviations to the specifications. The Engineer understands that manufacturers design systems with different features. This listing is therefore integral to the Engineer's determination of an equivalent product. Each deviation must reference the listed specification, by number if necessary, and explain in full detail how the proposed system is different.

E. Product Submittals

1. The following product data shall be electronically submitted by the OSHGS Supplier for review and approval by the Engineer that the product provided conforms to the site-specific requirements prior to the fabrication of the systems:

   a. Process and instrumentation diagram for the entire OSHG system, from potable water source to hypochlorite storage via both OSHG generating systems. Single generating train process and instrument diagrams will not be accepted.

   b. Shop drawings and catalog literature showing dimensional information and details of piping, fabrication, and erection of all materials and equipment furnished under this section, including:
      1) Detailed drawings of tank nozzle orientations provided.
      2) Detailed drawings of equipment installations provided.

   c. Scaled drawing of general layout, general arrangements, and major system components, including:
      1) Dimensions, including those for system connections

   d. Drawings showing fabrication, assembly, installation, and wiring diagram. Wiring diagrams for the electrical control panel and rectifier transformer shall consist of, at a minimum, control schematics, including coordination with other electrical devices operating in conjunction with the OSHGS.

e. Manufacturer's literature, illustrations including weight and dimensions, specifications, materials of construction, and bill of materials for each component of the system. Data shall include a complete description in sufficient detail to permit comparison with the technical Specifications. Major system components include:
   1) Water softener
   2) Brine pump
   3) Hydrogen dilution blower
   4) OSHG potable water feed pump
   5) Miscellaneous instrumentation, valves, and accessories

f. Performance data: for each pump and blower furnish a performance certification indicating:
   1) Pressure
   2) Capacity
   3) Efficiency
   4) Horsepower

g. Motor data: for each motor furnish a certified motor data sheet for the actual motor or for a previously manufactured electrically duplicate motor which was tested.

h. Control philosophy including I/O list and loop descriptions.

i. The acceptable range of water pressure for proper system operation. If a pressure or flow regulator is required, it shall be provided.

j. A list of all parameters, ratings or other characteristics where the proposed Sodium hypochlorite generator system deviates from the requirements set forth in these Specifications.

k. Installation instructions.

l. Performance testing protocol including a recommended test plan, measurement methods, and sample data sheet showing all pertinent process data to be recorded and the frequency and data readings.

m. Current NSF Standard 61 Certification for the generation skid being offered.

n. References for at least ten similar units that have been installed and have been operational for at least five years of continuous service.

o. Affidavits of compliance with referenced standards and codes.

F. Operation and Maintenance Manuals

1. Detailed operation and maintenance (O&M) manuals shall be provided by the Supplier to the Engineer for review and approval. At a minimum, the following shall be included:

   a. Required Operation Data.
      1) Complete, detailed operating instructions for each piece of equipment.
      2) Explanations for all safety considerations relating to operations.
      3) Recommended spare parts lists.

   b. Required Maintenance Data.
      1) All information and instructions required by plant personnel to keep equipment properly cleaned, lubricated, and adjusted so that it functions economically throughout its full design life.
      2) Maintenance summary forms.

3) Explanation with illustrations as necessary for each maintenance task
4) Recommended schedule of maintenance tasks.
5) Lubrication charts and table of alternate lubricants.
6) Troubleshooting instructions.
7) List of maintenance tools and equipment.
8) Name, address, and phone number of manufacturer and manufacturer's local service representative for major system components.

G. Manufacturer Services

1. Prior to scheduling services by the OSHGS Supplier, the Contractor shall verify the equipment installation and provide the completed installation checklist with photo documentation. Upon receipt of the completed installation checklist with photo documentation, the OSHGS Supplier shall schedule start-up and training to take place no sooner than two (2) weeks. The Contractor shall coordinate testing requirements and scheduling with the Engineer.

2. The OSHGS Supplier shall be present at each jobsite for the following time period after the system is installed, travel time excluded:
   a. Certification of proper installation, system startup, and functional testing.
      1) Installation inspection shall include supervising the correction of any defective or faulty work before acceptance by Owner.
      2) System startup shall include testing, calibrating, and adjustment of all components for optimum performance.
      3) Functional testing shall include inspection of integration of the provided equipment's controls to the Owner's SCADA system, etc.
   b. Training Owner's personnel and providing detailed instructions in the operation, maintenance, and troubleshooting for the system.
      1) Upon request, a training manual will be provided with an outline of the training procedures.

3. Services shall be provided by a technician that is factory-trained by the OSHGS Supplier and has demonstrated ability and experience in the installation and operation of the equipment.

PART 2 – PRODUCTS

2.01 ON-SITE SODIUM HYPOCHLORITE GENERATION SYSTEM

A. A transformer rectifier, electrolytic cells, water solenoid valve, brine solenoid valve, brine pump, rectifier cabinet, hydrogen dilution blower, chemical storage tanks, chemical metering pumps, and a PLC-based control panel containing system controls, water softener with flow meter, and all necessary interconnecting wiring and hardware shall form a complete on-site sodium hypochlorite generation system. Components of the OSHGS shall comply with this specification. All components of the electrolytic cell skid shall be pre-assembled, piped, wired to input and output, flanged, threaded, etc. connections located at easily accessible points on the skid. The installation contractor shall provide all interconnecting piping and conduit, which shall be Sch 80 PVC. The OSHGS shall be factory-tested prior to shipping as one self-contained unit.

2.02 HYDROGEN SAFETY MANAGEMENT

A. The generators shall have no waste products associated with its use other than hydrogen gas, which is to be vented to the atmosphere. Hydrogen Dilution blowers will be used to purge all residual hydrogen out of the system and storage tanks and dilute the hydrogen concentration 100 to 1 or below 25% of the LEL.

B. Any proposed system must meet every operational and material aspect of this specification. Hydrogen management shall be accomplished by the passive venting of each electrolytic cell without potential restrictions. This flow path should not have baffle plates, orifice plates or backpressure valves between the last point of product generation and atmospheric evacuation.

C. The presence of over-pressure rupture disks is not acceptable as the initiation of disk rupture would render the system inoperable. No hydrogen shall be vented directly to the hypochlorite storage tank where an accumulation could occur.

D. Under no circumstance will waste hydrogen be allowed to flow from one cell or cell compartment to the next. All hydrogen must immediately be released from each cell pack.

E. Minimum passive venting capability from each electrolytic cell pack shall be 4.0 square inches for every 100 pounds of chlorine production.

F. The hydrogen dilution system shall dilute the hydrogen concentration to below 25% of the LEL or 1% by volume.

G. Generator skid hydrogen dilution shall include passive vents connected to each cell and blower connected to the vent header. Sodium hypochlorite storage tanks shall be evacuated by blower.

H. Under no circumstance will the Hydrogen Safety Management requirements (Part 2.02) be relaxed or modified as they are critical operator safety features and core to the generator design. NOTE: THIS HYDROGEN SAFETY DESIGN MUST BE MET, REGARDLESS OF ONSITE GENERATOR MANUFACTURER SELECTED, AND WILL BE REQUIRED FOR SUBMITTAL APPROVAL.

2.03 ELECTROLYTIC CELL SKID ASSEMBLY

A. An electrolytic cell skid assembly shall be provided with the following overall dimensions:

SYSTEM I.D.	WIDTH	DEPTH	HEIGHT
MC-20-01	36.5”	16.5”	72”
MC-20-02	36.5”	16.5”	72”

B. Each electrolytic cell skid assembly shall have the following components and features:

1. 316 Stainless steel brine gear pump, with:

   a. Magnetic drive.
   b. Cavity-style design.

c. PEEK gear construction.
d. Integral speed control.
e. Mfg Tuthill or equivalent.

2. Water solenoid valve.

3. Polycarbonate water and brine rotameters.

4. Electrolytic cells

5. Transformer rectifier.

6. Magnetic flow meter.

7. Optical level switches.

8. Temperature switches.

9. Temperature sensor.

10. Teflon and Kynar interconnecting tubing.

11. 304 stainless steel frame, electrolytically polished for passivation, corrosion resistance, and chemical compatibility.

    a. Horizontal and vertical tube sections shall be minimum .090-inch wall thickness.
    b. All vertical and horizontal frame connections shall be welded.
    c. The completed frame with all mounted components shall comply with the UBC structural requirements for seismic zone four.

C. The generator shall be factory wired, plumbed, and mounted on a self-contained skid assembly.

D. Each electrolytic cell shall be arranged so that it can be completely drained in place.

E. The rack mounted flow control panel will consist of a water rotameter, water sensor, brine rotameter and a positive displacement gear pump with variable speed drive.

The variable speed drive will respond to a 0-5 VDC signal generated by the PLC algorithm in order to maintain constant current relative to variable water temperature or flow rate.

F. The process shall operate in a batch environment allowing for consistent hypochlorite concentrations and greatest efficiencies.

G. The generator skid will be supplied with a 4-20 mA electrolyte temperature sensor that will function to return a linear signal proportional to 0-100°C, which will allow continuous operation up to 130°F without interruption. Under no circumstance will bimetallic “snap” switches be permitted as the primary over-temperature sensor.

H. The generator package shall have the following redundant interlocked safety features:

1. Cell high temperature switch (on multiple cell units).
2. Low level switch for each cell.
3. Water flow sensor.
4. Transformer high temperature switch.
5. Automatic current regulation.

I. All electrical equipment and enclosures will be built and certified to UL 508 standards and will possess the appropriate label.

J. The generation system shall be pre-piped and skid-mounted.

1. The OSHGS skid frame shall be constructed of 304 stainless steel tube for structural strength. Horizontal and vertical tube sections shall be of .125-inch wall thickness and have a depth no greater than twenty four inches by a length not exceeding six feet two inches. The entire skid shall undergo electrolytic polishing for ultimate passivation, chemical compatibility, and corrosion resistance. The completed frame with all mounted components shall comply with the UBC structural requirements for seismic zone four.
2. The skid frame shall be configured to allow easy access to all components, including the electrolytic cells. All vertical and horizontal frame connections shall be welded. Under no circumstances can water/liquids handling and/or cells be located immediately above the power supplies. The skid frame shall support, as a minimum, the following mounted equipment:

    a. Generator electrolytic cells
    b. Power supply/rectifier
    c. Water and brine rotameters
    d. Control panel
    e. Interconnect pipes valves and fittings
    f. Interconnect conduit and wiring
    g. Water flow sensor
    h. Variable-speed, positive-displacement brine pump

2.04 ELECTROLYTIC CELLS

A. Multiple electrolytic cells shall be provided as follows:

SYSTEM I.D.	CELL QUANTITY	CELL CAPACITY	ACTIVE SURFACE
EC-701	1	20	2” x 12”
EC-702	1	20	2” x 12”

B. The electrolytic cell bodies shall be constructed of and clear acrylic materials, allowing for front and rear visual inspection of the electrodes from all angles.

C. Each electrolytic cell will be constructed utilizing DSA coated titanium anodes and titanium cathodes. The cells must be configured in a vertical format with a recirculating loop provided for each cell. This recirculating loop will also allow the passive removal of hydrogen from each cell via the upper hydrogen vent. Under no circumstance will hydrogen be allowed to be driven from one cell or cell loop to the next.

D. Each cell loop will also incorporate an optical level sensor so as to preclude any possibility of exposing an active electrode surface

E. The wetted cell components will consist only of the electrodes and acrylic cell body. No internal baffles, spacers, or connecting hardware will be allowed.

F. Cells shall utilize titanium bolting hardware.

2.05 TRANSFORMER RECTIFIER

A. The 6-pulse D.C. Rectifier will consist of a fully isolated three phase step down transformer and bridge rectifier. Under no circumstance will switching rectifiers or phase angle fired SCR voltage correction be permitted. D.C. ripple will be less than 4% with a power factor of 95.5% or better.

B. The transformer rectifier will be a fixed voltage unit where the current will be allowed to float as a function of electrolyte conductivity.

1. Constant current will be achieved via an active feedback loop where rectifier amperage is measured and reported to the PLC. The control algorithm calculates the appropriate amount of brine to mix with the incoming water so as to maintain constant current.

2. SCR-controlled rectifiers will not be allowed.

C. Rectifier efficiency will be 94% or greater.

D. The transformer/rectifier will house a 4-20 mA D.C. current transducer and NEMA 4X digital display of amperage.

E. The rectifier cabinet and base frame will be constructed of 304 Stainless Steel and will be of a modular design. All internal wiring connections and components will be easily accessible by removing the front access panel.

F. The transformer enclosure will be removable from the skid assembly as one piece, allowing for unobstructed access to the transformer.

G. The transformer rectifiers shall be designed for the following operating conditions:

TRANSFORMER I.D.	CAPACITY (KVA)	PRIMARY VOLTAGE	SECONDARY VOLTAGE
RCT-750	2.4	120VAC/1PH/20A	60 VDC
RCT-760	2.4	120VAC/1PH/20A	60 VDC

A. The stepdown transformer rectifier shall be provided with the following accessories:

1. DC bridge rectifier utilizing three diode assemblies and an aluminum heat sink with 120 VAC cooling fan.

2. Panel-mounted electrical disconnect switch.

2.06 ELECTRICAL CONTROL PANEL

A. The OSHGS Supplier shall provide a NEMA 4X, 304 stainless steel, electrical control panel, which shall include controls for the entire sodium hypochlorite generation and feed system. The panel shall be mounted onto the generator skid and pre-wired at the factory

to system components. The control panel shall house the operator interface terminal (OIT), PLC, hydrogen blower controls, and terminal strips to fully support the functions of generator operation, tank level, and metering pump proportional control.

B. All controls and operations logic specified herein and as shown on the instrumentation loop diagrams required for the system shall be programmed in a Programmable Logic Controller (PLC). The control cabinet logic will function at the PLC level where operating parameters will be measured, corrected, scaled, reported, and controlled. Contractor shall coordinate with OSHGS Supplier and instrumentation supplier for proper integration of the system.

C. The control panel shall display all relevant operating parameters and/or alarm conditions. The OIT will serve as the operator interface, data input screen, and alarm log.

D. At a minimum, the panel shall have the following features, components, and functionality:
1. The generator shall automatically start and stop based on the high and low levels in the sodium hypochlorite storage tank.
2. The generator shall shut down and alarm for the following conditions:
    a. Low electrolyte level in cell.
    b. Hypochlorite temperature exceeds 130°F (55°C).
    c. Inlet flow falls below a preset value.
    d. Rectifier high or low amperage.
    e. Rectifier high temperature.
    f. Hydrogen dilution blower failure.
3. Low-low level alarm for hypochlorite storage tank.
4. High-high level alarm for hypochlorite storage tank.
5. Enclosure cabinet, 24" x 24" x 8", with ample interior volume so as to be easily wired and serviced.
6. 5.7" color touchscreen human-machine interface (HMI) with dedicated screens, including help dialogs covering all basic operations and detailed alarm explanations, for each portion of the process and Ethernet communications for PLC connection.
7. Allen Bradley MicroLogix 1400 programmable logic controller (PLC) with Ethernet communication protocol.
8. Rectifier controls.
9. Blower controls.
10. Analog inputs from the flow meter and residual analyzer to drive each VFD based on the appropriate flow, residual, or compound loop algorithm.
    a. Under no circumstances will external controllers be allowed to control the VFD output.
11. Logging and storing alarm history.
12. Security protection.
13. Dedicated 24 VDC power supply for PLC and HMI.
14. Emergency stop pushbutton.
15. Cabinet-mounted electrical disconnect switch.
16. Start-up shall be accomplished without the need for a laptop computer or proprietary software.

E. The OSHGS Supplier shall be responsible for programming the Generation System package control software. The OSHGS Supplier shall deliver to the Owner all PLC and HMI code for future reference prior to final acceptance.

2.07 HYDROGEN DILUTION BLOWER

A. A hydrogen dilution blower shall be designed for the following operating conditions:

BLOWER I.D.	CAPACITY (ACFM)	STATIC PRESSURE (IN WC)	MOTOR HP	ELECTRICAL SERVICE
B-710	163	4	1/2	240V/1Ph/60Hz
B-720	163	4	1/2	240V/1Ph/60Hz

B. The blower shall be AMCA type B spark resistant of cast aluminum construction. The blower shall be cast with commercial grade 319 cast aluminum, having a 3/16" minimum wall thickness. Housing halves should be attached with tapered lugs having a minimum 45 degree taper from centerline for additional strength. Inlets and outlets shall be round.

C. The blower wheel hub shall be an integral part of the wheel casting. The wheel shall be a radial-type wheel. The blower shall be statically balanced by removal of material only – no additional weights are to be used in the balancing process.

D. The blower shall be arrangement 4 with a base of 12 gauge steel (minimum).

E. Hydrogen dilution blower shall be PB Series by Cincinnati Fan or equal.

F. The hydrogen dilution blower shall be provided with the following accessories:

1. Inlet guard.
2. Teflon shaft seal.
3. Current sensor.
4. Differential pressure switch positioned in the dilution ductwork vent stack.
5. Software controlled safety interlocks to detect control system sequence failure.

G. The blower shall be capable of being wall mounted as necessary to fit within the allocated space.

2.08 WATER FILTER

A. A wall-mounted large-capacity cartridge type filter housing holding a 10" cartridge for dirt, rust, and particulate matter from softener's feed water shall be provided. The filter housing shall feature NPT inlet and outlet connections and a mounting bracket. A polypropylene cap with Buna-N O-ring shall be supplied.

B. The filter cartridge shall be a 4-1/2" diameter, 50-micron, disposable cartridge. Cartridge shall be manufactured from a pleated non-woven and reusable polyester fabric with polypropylene core.

C. Two (2) pressure gauges shall be provided to measure the pressure drop across the filter.

2.09 WATER SOFTENER

A. A dual-tank automatic water softening system shall be provided to remove hardness in the feed stream to the OSHGS, plus provides brine water makeup. The softener shall be designed for the following operating conditions:

SOFTENER I.D.	DUAL TANK DIMENSIONS	EFFICIENCY*	KINETICO MODEL NO.
WS-200	17" ø x 46" H	4,000	CP-208S

*Expressed as grains exchanged per pound of salt

B. Softener shall remove hardness to less than ½ gpg. One tank will be on-line during service. A water meter shall automatically initiate system regeneration. The water meter shall measure the processed volume and be adjustable. Water softeners that regenerate on a fixed time will not be acceptable. When the ion exchange capacity of one resin tank is nearly exhausted, the hydraulically-driven, flow-controlled switchover valve will automatically divert flow to the alternate tank while initiating brine backwashing of the first tank for regeneration of the ion exchange resin. During regeneration cycles, one tank shall provide water to service and to the regenerating tank. Regeneration shall use salt solution from the brine tank.

C. The regeneration control valve shall be top mounted (top of media tank), and manufactured from non-corrosive materials. Control valve shall not weigh more than four pounds. Control valve shall provide service and regeneration control for two media tanks. Inlet and outlet ports shall accept a quick connect, double O-ring sealed adapter. Interconnection between tanks shall be made through the regeneration valve with a quick connect adapter. Control valve shall operate using a minimum inlet pressure of 25 psi. Pressure shall be used to drive all valve functions. No electric hook-up, electric timers, or gear motors shall be required. Control valve shall incorporate four operational cycles including service, brine draw, slow rinse, and a combined fast rinse and brine refill. The brine cycle shall flow shall be opposite the service flow, providing a countercurrent regeneration. Control valve shall contain a fixed orifice eductor nozzle and self-adjusting backwash flow control. The control valve will prevent the bypass of hard water to service during the regeneration cycle.

D. The tanks shall be designed for a maximum working pressure of 125 psi and hydrostatically tested at 300 psi. Tanks shall be made of polyethylene and reinforced with fiberglass wrapping. Each tank shall include a 2.5 in. threaded top opening. Upper and lower distribution system shall be of a slot design. Distributors will provide even flow of regeneration water and the collection of processed water.

E. Each softener shall include a non-solvent, high-capacity cation resin having a minimum exchange capacity of 30,000 grains/ft³ when regenerated with 15.0 lbs/ft³. The media shall be solid, of a proper particle size and shall contain no plates, shells, agglomerates or other shapes, which might interfere with the normal function of the water softener.

F. The water softener shall be provided with the following accessories:

1. 1-1/2-inch inlet and outlet pipe connections.
2. 1/2-inch HDPE tube with in-line check valve for feeding brine for regeneration.
3. 1/4-inch wastewater discharge to sewer for backwash waste.

G. Softener shall support two (2) twenty pound per day Onsite Sodium Hypochlorite Generators simultaneously.

2.10 BRINE TANK

A. A high-density linear polyethylene (HDLPE) salt/brine storage tank shall be provided for the following operating conditions:

TANK I.D.	DIAMETER	WALL HEIGHT	SALT CAPACITY (LBS)	BRINE CAPACITY (GALLONS)
TK-700	31”	48”	1500	150

B. The brine tank shall be one-piece, rotationally-molded of linear high-density polyethylene. A high-quality, chemically-resistant plastic with high stress crack and impact resistance shall be used. The tanks shall be translucent and comply with USDA and FDA regulations for storage and processing of food. The plastic must contain a minimum of 0.25% to a maximum of 0.50% long term U.V. stabilizer. Plastic containing any fillers will not be acceptable.

C. The brine tank shall be designed with an open top to receive bag salt via manual loading. A removable lid shall be provided.

D. The salt/brine tank shall be provided with the following accessories utilizing threaded bulkhead fittings:

1. Under drain.
2. Drain valve.
3. Dual Level control assemblies to support two (2) twenty pound per day Onsite Sodium Hypochlorite Generators, including:
    a. Clear PVC external sight glass
    b. Polypropylene float-type mechanical SPST level switch at 12" to activate a normally-closed, solenoid pilot-operated diaphragm valve.
    c. All level controls shall be operated and serviced at ground level. Top-mounted valves and controls are not acceptable.

Unless otherwise specified, all pipe and fittings shall be Sch 80 PVC and all fasteners stainless steel.

E. For tanks using granular or fine grade (less than 12 mesh) solar salt, a quartz rock filter bed shall be installed in the sump. The filter bed shall consist of a 5” layer of 0.125” x 0.125” on top of a 7” layer of 0.250” x 0.250”. The filter bed shall be evenly-distributed over the entire bottom of the vessel. All quartz rock shall be AWWA-washed and NSF-certified.

2.11 BRINE FILTERS

A. A wall-mounted cartridge type filter housings holding a 10" cartridge for dirt, rust, and particulate matter from the brine stream shall be provided. The filter housing shall be feature NPT inlet and outlet connections and mounting bracket. A polypropylene cap with Buna-N O-ring shall be supplied.

B. The filter cartridge shall be a 50-micron, disposable cartridge.

2.12 SODIUM HYPOCHLORITE STORAGE TANK

A. A high-density linear polyethylene (HDLPE) sodium hypochlorite storage tank shall be provided for the following operating conditions:

TANK I.D.	DIAMETER	WALL HEIGHT	CAPACITY (GALLONS)
TK-701	48”	75”	510
TK-702	48”	75”	510

B. The sodium hypochlorite tank shall be upright, cylindrical, flat bottom, single wall tanks molded in a one-piece seamless construction by the rotational molding process (laminated or fabricated tanks will not be accepted. The material used shall be virgin polyethylene resin as compounded and certified by the manufacturer. All polyethylene resin material shall contain a minimum of a U.V. 15 stabilizer as compounded by the resin manufacturer.

C. The standard design specific gravity shall be 1.9. The minimum required wall thickness for the cylinder straight shell must be sufficient to support its own weight in an upright position without any external support. The top head must be integrally molded with the cylinder shell. The minimum thickness of the top head shall be equal to the top of the straight wall. The tank shall be designed to provide a minimum of 4 tie-down lugs integrally molded into the top head. The tie-down lugs shall be designed to allow tank retention in wind and seismic loading.

D. The sodium hypochlorite storage tank shall be properly vented and have a minimum of three inches clearance on all sides to allow for expansion and contraction.

E. The OSHGS Supplier shall provide a submersible pressure sensing-type electronic level transmitter which shall provide a 4-20 mA level signal for proper for operation of the generation equipment and alarm initiation. Level controls for the tank shall be brought to the operator interface.

F. The sodium hypochlorite storage tank shall be supplied with the following accessories utilizing threaded bulkhead fittings:

1. Vent connection.
2. Fill connection.
3. Forced air blower connection.
4. Pump suction connection.
5. Drain and overflow connections.
6. 18-inch threaded access manway with cover.

Unless otherwise specified, all pipe and fittings shall be Sch 80 PVC and all fasteners stainless steel.

2.13 COMMERCIAL STRENGTH HYPOCHLORITE DILUTION PANEL

A. Under emergency conditions commercially available sodium hypochlorite (10-12 percent solution) can be added if required via a commercial strength hypochlorite dilution panel provided by the OSHGS Supplier as part of the OSHGS.

B. The commercial strength sodium hypochlorite dilution panel shall include a wall-mounted PVC panel with the following instruments and accessories:

1. Venturi eductor, polypropylene construction.
2. Polysulfone inline potable water rotameter.
3. Polysulfone inline commercial strength sodium hypochlorite rotameter.
4. Two (2) manually-operated flow control valves.
5. Outlet check valve.
6. Sch 80 PVC piping and fitting.

C. A centrifugal magnetically-driven booster pump shall be provided for the concentrated sodium hypochlorite to ensure pressure interruptions will not disrupt the dilution process. Pump shall be Series 3 by March Pump or equal.

2.14 OSHG FEED WATER BOOSTER PUMPS

A. The OSHG supplier shall furnish two OSHG Feed Water Booster pumps. The pumps shall operate in a duty/stand-by configuration.

B. The booster pump shall deliver constant flow and pressure (50 psig, min.) to two (2) Onsite Sodium Hypochlorite Generators simultaneously. The incoming potable water supply pressure is approximately 28 psig.

1. Booster Pump Shall be Grundfos Series CMBE 1-75, Grundfos SCALA Series, or Equivalent.

2.15 OSHG FEED WATER PRESSURE TANK

A. For efficient operation of the OSHG Feed Water Booster pumps, the OSHG supplier shall furnish a vertical, hydro-pneumatic OSHG Feed Water Pressure Tank.

B. The OSHG Feed Water Pressure Tank shall be sized to limit the number of OSHG Feed Water Booster Pump starts to 4 starts (maximum) per hour and have a drawdown volume 6 gallons (min.). Cut-in pressure shall be 60 psig and cut-out pressure shall be 80 psig.

C. The OSHG Feed Water Pressure Booster Tank shall have a carbon steel shell, carbon steel heads, a Carbocoat 140 -Harvester Red exterior, and have a heavy-duty Butyl ASME, NSF 61 listed replaceable bladder.

D. The OSHG Feed Water Pressure Tank shall have NPT epoxy line system connections and a 0.302”-32 charging valve connection to facilitate on-stie charging of the tank to meet system requirements, a pressure gauge, and a bladder integrity monitor.

E. The tank must be constructed in accordance with the most recent addendum of Section VIII Division 1 of the ASME Boiler and Pressure Vessel Code. The maximum design pressure shall be 125 psig.

F. The tank volume shall be 35 gallons (min.)

G. The OSHG Feed Water Pressure Tank shall be Wessels Model Number FXA-130 or equivalent.

2.16 HEAT EXCHANGER

A. The OSHG supplier shall furnish a feed water heat exchanger to increase the feed water to a minimum of 55°F.

B. The heat exchanger shall not require external power or control circuity and shall function in a completely passive fashion.

C. Heat Exchanger

1. A titanium and PVC heat exchanger shall be provided on the OSHGS rack capable of raising the incoming cold water temperature 8-15°F.
2. The process will function to bleed waste heat from the product hypochlorite to the incoming cold water.
3. A bypass valve shall be provided for seasonal adjustment. Additionally, a flushing valve and drain shall be provided.
4. All wetted components will be titanium and all internal gasketing will be Viton.
5. Manufactured by PSI Water Technologies or Equivalent.

2.17 HYDROGEN DETECTOR

A. A hydrogen gas monitoring system shall be provided to continuously measure and display gas concentration and provide alarms when preset limits are exceeded. A transmitter will send the signal to the control panel.

B. The gas monitoring system shall have a NEMA 4X enclosure and two-line, eight-alphanumeric character LCD display with linear 4-20 mA output signal.

C. The gas detector shall be model CN06 by Conspec Controls.

2.18 ACID CLEANING SYSTEM (7 GALLON CAPACITY)

A. Pre-assembled acid cleaning system and manual hand pump shall be provided by the OSHGS Supplier for Acid Washing of the Electrolytic Cells. The unit is to be wheeled for each of movement and storage.

B. Pump Shall be Hand Crank and chemical resistant materials constructed of polypropylene body with PTFE, FKM, and Hastelloy wetted parts.

C. Acid cleaning tank shall have the capacity of 7 gallons and be chemical resistance and constructed of Polyethylene.

D. A one-inch camlock fitting, discharge hose, and appurtenance shall be included to transfer acid to and from the electrolytic cells.

E. A carbon Filter is to be fitted so that off gas of the muriatic acid during operation will be contained within the Acid Cleaning System.

2.19 WATER QUALITY STATION

A. Water Quality Station consists of a reagentless amperometric probe type analyzer able to read at least residual chlorine or chloramine, pH, ORP, and temperature simultaneously.

B. At a minimum, the Water Quality Station shall have the following features, components, and functionality:

1. Materials
   a. Housing: Powder coated steel
   b. Enclosure Rating: NEMA 3R
2. Power Requirements: 115 VAC, 60 Hz
3. Sampling and discharge flow rate: 10 GPH
4. Maximum inlet pressure of flow cell: 30 PSI
5. HMI: 3.8“ LCD Touch Screen
6. SCC Communication: Modbus RS-485
7. SCADA Communication: 8 analog outputs
8. Real-time data acquisition on USB Flash Drive.
9. Sensors
   a. Total Chlorine Sensors
      i. Dual probe configuration
      ii. Type: 3-electrode amperometric
      iii. Measuring Range: 0 - 20 mg/L
      iv. Resolution: 0.01 mg/L
   b. pH Sensor
      i. Type: Combined 2-electrode type pH probe
      ii. Measuring Range: 0 – 14
      iii. Resolution: 0.01
   b. ORP Sensor
      i. Type: Single Junction
      ii. Measuring Range: +/-2000mV or range of ORP meter
      iii. Measuring surface: Platinum Extended Tip

2.20 TOOLS, SPARE PARTS, AND MAINTENANCE MATERIALS

C. The OSHGS Supplier shall furnish one set of the following spare parts for each onsite sodium hypochlorite generator system:

1. One (1) electrolytic cell level sensor
2. One (1) electrolytic cell temperature sensor
3. One (1) brine pump
4. One (1) complete electrolytic cell including cell housing (loose electrodes are not acceptable)

D. The OSHGS Supplier shall furnish one (1) spare dual water softener sized for the full generation capacity.

E. Spare parts shall be packed in sturdy containers with clear indelible identification markings and shall be stored in a dry, warm location until transferred to the Owner at the completion of the contract.

F. The OSHGS Supplier shall furnish and initial supply of all greases and lubricants required to start operations. Supply an amount of these materials necessary for one year of continuous operation.

PART 3 – EXECUTION

3.01 FACTORY ASSEMBLY AND TESTING

A. The OSHGS shall be pre-assembled at the manufacturing location.

B. System shall be tested for a minimum of eight hours at the location of assembly to assure it is in full compliance with the requirements of the specific design for the project and this specification.

C. Factory testing shall include visual inspection of all equipment, complete assembly, and functional testing of equipment including leak testing, piping and instrumentation check, verification of control panel wiring and operation, and confirmation of proper operating parameters.

D. Engineer and/or Owner reserve the right to be present at the OSHGS Supplier's manufacturing facility to witness factory testing. Engineer and/or Owner shall provide intent to witness factory testing at the time of the design submittal review and approval, and OSHGS Supplier shall provide notice to Engineer and/or Owner regarding the scheduled time of the factory testing at least five business days in advance of the proposed factory test.

E. The OSHGS Supplier shall maintain Quality Control documentation that includes system test settings and measured performance.

3.02 DELIVERY, STORAGE, AND HANDLING

A. The OSHGS shall be packaged and shipped so as not to incur damage to any portion of the equipment through handling and installation of the system itself.

B. The Contractor shall be responsible for the delivery, storage, and handling of products in accordance with the OSHGS Supplier's recommendations.

C. The Owner shall inspect all equipment and materials against approved Shop Drawings at time of delivery. Equipment and materials damaged or not meeting requirements of the approved Shop Drawings shall be immediately returned to the OSHGS Supplier for replacement or repair.

D. Equipment and materials shall be stored in a dry, chemical-free location and protected from the elements according to the OSHGS Supplier's instructions.

E. Equipment and materials shall be handled in an approved manner according to the OSHGS Supplier's instructions.

3.03 INSTALLATION

A. Installation of the generator, tanks, metering pumps, and appurtenances shall be performed by the Contractor and shall be in accordance with the Drawings and with the OSHGS Supplier's instructions and recommendations. Conflicts of information shall be called to the attention of the Engineer. It is the Contractor's responsibility to provide:

1. Water piping and valves from source to OSHG Feed Water Booster pumps, OSHG Feed Water Booster pumps to water softener, and from softener to brine tank and electrolytic cell skid.

2. Brine piping and valve from brine tank to electrolytic cell skid.

3. Sodium hypochlorite piping and valves from electrolytic cell skid to sodium hypochlorite storage tank(s), from sodium hypochlorite storage tank(s) to metering pump(s), and from metering pump(s) to point of application.

4. Vent piping, valves, and stack from hydrogen dilution blower to electrolytic cell skid vent connection and onwards.

5. Vent piping, valves, and stack from hydrogen dilution blower to sodium hypochlorite storage tank(s) and onwards. Hydrogen vent piping shall be installed per OSHG supplier's shop drawings and installation instructions.

6. All overflow and drain piping and valves.

7. Electrical connections, wiring, and conduits to/from system control panel for power, control, and alarm interfaces with remote located instruments (tank level and pressure transmitters, etc.), plant SCADA, etc.

   a. All wiring to be TTHN stranded wiring and will conform to the most current version of the National Electric Code.
   b. All 4-20 mA instrumentation wiring will be 2- or 4-conductor shielded cable.
   c. Instrumentation and signal/control wiring will be run in conduits separated from all other AC wiring systems.

8. Gaskets, seals, and O-rings for hypochlorite service shall be constructed of Hypalon, PTFE, or FKM. Santoprene or neoprene shall be used for brine service. EPDM shall be used for water and ammonia.

9. Any necessary Unistrut, hangers, supports, etc. for Contractor-supplied piping and conduits.

10. Anchor bolts, suitable concrete mounting pads and other incidentals as necessary to complete the installation.

11. Hydrostatic leak testing of brine and sodium hypochlorite storage tanks.

12. Pressure testing of all interconnecting piping as is practical or directed by the Owner.
13. Flushing of all piping with potable water prior to system start-up and commissioning to remove materials that may have entered as a result of the installation process.

B. All equipment units or assemblies shall be installed on concrete bases and secured with anchor bolts in accordance with the OSHGS Supplier's recommendations and as shown. Contractor shall be responsible for the design of the equipment pads. The contractor shall coordinate with OSHGS supplier for skid placement and anchoring.

C. Contractor shall inspect all concrete pads for proper elevation, dimensions, cutouts, evenness and anchor bolt locations and correct if necessary.

D. The Contractor shall inspect all equipment before installation, if damaged; notify the Engineer and OSHGS Supplier promptly. Do not install damaged equipment until the OSHGS Supplier makes repairs in accordance with OSHGS Supplier’s written instruction and approval.

E. The Contractor shall, after installation of storage tanks is complete but before piping connections are made, block all outlets and fill each tank with potable water and tested for leakage for a minimum of 24 hours prior to system start-up and commissioning. Any leaks that are observed will be repaired and the tank re-tested.

F. Contractor shall provide a drain for each piece of equipment, according to the OSHGS Supplier's instructions.

G. Power shall be provided by the Contractor to the system control panels as shown on the OSHGS skid drawings. The Contractor shall be responsible for providing all necessary conduit and wiring necessary for a complete electrical service to this location. All wiring shall comply with the National Electrical Code.

H. Installation shall include furnishing and applying an initial supply of lubricants, as provided by the OSHGS Supplier.

I. Contractor shall support piping independent of equipment. Equipment shall be free from all loads and stresses induced by the piping.

J. All equipment including motors, belts, and drives shall be aligned to the best industrial standards. Field check and adjust all equipment alignments in the presence of the Engineer.

K. The Contractor shall inspect all equipment before installation, if damaged; notify the Engineer and OSHGS Supplier promptly. Do not install damaged equipment until the OSHGS Supplier makes repairs in accordance with OSHGS Supplier’s written instruction and approval.

L. Tie-down lugs for tanks shall be grouted or shimmed to prevent excessive loads being transferred to the tank shell.

M. Make all electrical connections in conformance with the requirements of the electrical specifications.

3.04 START-UP SERVICES AND FUNCTIONAL TESTING

A. A factory technician from the OSHGS Supplier shall be present at the jobsite for initial system start-up/commission of equipment as specified in section 1.03 G.

B. A factory technician will ensure that the systems are properly installed, start-up the systems, and train the Owner's personnel.

C. Contractor and OSHGS Supplier shall make equipment adjustments required to place system in proper operating condition.

3.05 SYSTEM TESTING

A. The Contractor shall be responsible for all incidental costs associated with OSHGS system testing other than labor provided by the OSHGS manufacturer, including costs for salt, water, power, and disposal.

B. The system test shall be conducted upon start-up. The Contractor shall make any additions or modifications to the OSHG as may be necessary, at no additional cost to the Owner, and the system tests for the system shall be repeated in its entirety. The duration of the tests and detailed test procedure shall be submitted for approval prior to the testing period.

1. During testing, low-low and high-high levels, control valves, transformer voltage, and all other adjustable parameters shall be held constant. Clean, stable power and consistent water pressure at required temperatures must be maintained at all times. Changes in OSHGS operating conditions shall not be permitted. All fine tuning of operating conditions shall be performed prior to testing.
2. Design operating conditions shall be maintained for a minimum of four hours. During this time, all pertinent operating parameters shall be monitored and recorded, sufficient sampling and analysis shall be conducted to demonstrate that sodium hypochlorite generation is at design conditions.
3. Hardness levels shall be determined by EDTA titration.
4. Brine flow rate, softened water flow rate, DC amperage, cell outlet temperature, and sodium hypochlorite concentration levels shall be measured once every 60 minutes. All operating pressure shall also be recorded at this time.
    a. Sodium hypochlorite concentration shall be determined by redox titration.
    b. All other data shall be direct instrument reading.
5. An analysis of the performance tests shall be submitted. The calculated consumable units shall be as specified in Section 1.01.B. Should the OSHGS performance not meet the performance requirement, that system shall have failed the performance test. The Contractor shall make any additions or modifications to that OSHGS as may be necessary, at no additional cost to the Owner, and the performance tests for that system shall be repeated in its entirety.

3.06 IDENTIFICATION AND MARKING

A. The OSHGS, along with all applicable components, shall be marked and identified for all health, flammability, and reactivity of hazardous materials as required by all applicable jurisdictional building codes, statues, standards, regulations, and laws.

END OF SECTION

SECTION 46 33 44 - PERISTALTIC METERING PUMPS SKIDS

PART 1 - GENERAL

1.1 SUMMARY

A. Section Includes: Supply and testing of completely functional, skid-mounted chemical metering peristaltic pump feed systems.

B. Related Requirements:
   1. Section 400531 – PVC Pipe
   2. Section 401111 – Valves and Actuators

1.2 SYSTEM DESCRIPTION

A. Scope:
   1. Each individual chemical feed system shall include a field assembled or manufacturer fabricated skid assembly containing the chemical metering pumps, all necessary piping, valves, fittings, supports, electrical controls and accessories as indicated in the Process and Instrument Drawings and specified herein.

B. Design Requirements:
   1. All chemical metering pumps and ski-mounted components shall be designed, adapted, and fully guaranteed for the respective intended use and shall be constructed of materials compatible with the chemicals indicated in the service requirements and with the environment in which they are installed.

C. The metering pump skid shall contain the following:
   1. Provide HDPE skid with drip lip and backwall for mounting of piping and accessories.
   2. Peristaltic Pumps
   3. Calibration Columns
   4. Pulsation dampeners (if required)
   5. Pressure gauges
   6. Pressure switches
   7. Flow Sensors
   8. Ball valves and unions
   9. Check valves
   10. Pressure Relief valves

1.3 REFERENCE STANDARDS

A. U.S. General Services Administration:
   1. ZZ-R-765 - Commercial Item Description: Rubber, Silicone.

1.4 COORDINATION

A. Section 013000 - Administrative Requirements: Requirements for coordination.

B. Coordinate Work of this Section with **Owner**

1.5 SEQUENCING

A. Section 011000 - Summary: Requirements for sequencing.

B. Sequence Work to prevent interference with plant operations

1.6 SUBMITTALS

Only request submittals needed to verify compliance with Project requirements.

A. Section 013300 - Submittal Procedures: Requirements for submittals.

B. Product Data:
   1. Submit pump performance characteristics.
   2. Submit electrical characteristics and connection requirements.
   3. Submit manufacturer model number, dimensions, service sizes, and finishes.

C. Shop Drawings:
   1. Submit detailed and certified dimensional Shop Drawings for materials and equipment, including wiring and control diagrams, performance charts and curves, installation and anchoring requirements, fasteners, and other details.

D. Manufacturer's Instructions:
   1. Submit detailed instructions on installation requirements, including storage and handling procedures, anchoring, and layout.
   2. Submit application, selection, and hookup configuration.
   3. Submit hanging and support requirements and recommendations.

E. Field Quality-Control Submittals: Indicate results of Contractor-furnished tests and inspections.

F. Manufacturer Reports: Indicate that equipment has been installed according to manufacturer's instructions.

1.7 CLOSEOUT SUBMITTALS

A. Section 017000 - Execution and Closeout Requirements: Requirements for closeout procedures.

B. Project Record Documents: Record actual locations and final orientation of equipment and accessories.

C. Operation and Maintenance Data: Submit maintenance instructions for equipment and accessories.

1.8 QUALITY ASSURANCE

A. Include this Article to specify compliance with overall reference standards affecting products and installation included in this Section.

B. All pumps and components shall be assembled onto a ski-mounted system and shop or field tested for capacity and pressure prior to start-up with documented results of testing submitted with shop drawings.

C. Qualified suppliers shall have an ISO 9000 quality assurance program. Supplier shall provide a copy of current certification by an accredited audit agency.

D. Qualified manufacturers shall have authorized region service and repair centers. Regional service staff shall be certified through a quality program that includes a minimum of one week factory training every two years and an acceptable performance on a comprehensive examination at the end of each training sessions.

E. Qualified suppliers shall assemble product using “touch-quality” methods and procedures.

F. Qualified supplies shall test pumps for acceptable performance with fully automated test fixtures with computer output of test results. A copy of test results shall be supplied with each peristaltic pump.

1.9 DELIVERY, STORAGE, AND HANDLING

A. Section 016000 - Product Requirements: Requirements for transporting, handling, storing, and protecting products.

B. Inspection: Accept pumps on-Site in manufacturer's original packaging and inspect for damage.

C. Storage:
1. Store products in areas protected from weather, moisture, or possible damage.
2. Do not store products directly on ground.

D. Handle products to prevent damage to interior or exterior surfaces.

1.10 MAINTENANCE

A. Special Tools: Deliver 1 set of any special tools needed to assemble and dissemble the metering pump

B. Extra materials: Spare parts shall include peristaltic hoses.

PART 2 - PRODUCTS

2.1 PERISTALTIC-TYPE METERING PUMPS

A. Manufacturers:
1. Peristaltic pumps shall be FLEXFLO M3 Municipal peristaltic pump, manufactured in the U.S.A by Blue-White
2. Approved Equal

B. Description:
1. The Contractor shall install positive displacement, peristaltic type tubing pumps with a brushless variable speed motor, non-spring-loaded roller assembly located in the pump head, integral tube failure detection system, tube life roller revolution counter with user alarm set-point, flexible tubing with attached connection fittings, controls, accessories, and appurtenances necessary for feeding chemical solution in accordance with the Contract Documents. Pumps shall be designed to meet the requirements below. FLEXFLO M3 model shall be capable of output volumes from 0.0002 to 33.3 gallons per hour (0.0007 to 126 liter per hour).

C. Quality Assurance:
1. Pump shall be warranted by the manufacturer for a period of five years. Warranty shall include chemical damage to the pump head and roller assembly for a period of two years.

D. There shall be no valves, diaphragms, springs, or dynamic seals in the fluid path. Process fluid shall contact the pump tubing assembly and connection fittings only.

E. Pump shall be capable of 24-hour continuous duty, self-priming and operating in either direction of flow at the rated maximum pressure of up to 125 psi

F. Pump shall be capable of running dry without damage

G. Pump shall be capable of operating in either direction without output variation

H. Pump shall be capable of a suction lift shall of 30 feet of water

I. Construction:
   1. Pump Head:
      a. Tube failure detection sensors shall be wholly located in the pump head. Tube failure detection system shall not trigger with water contact. Float type switches shall not be used. Process fluid waste ports or leak drains shall not be provided.
      b. Squeeze rollers with encapsulated ball bearings shall be directly coupled to a one-piece thermoplastic rotor. Four nylon rollers shall be provided; two squeeze rollers for tubing compression shall be located 180 degrees apart and two guide rollers that do not compress the tubing shall be located 180 degrees apart. The roller diameters and occlusion gap shall be factory set to provide the optimum tubing compression; field adjustment shall not be required. Spring-loaded or hinged rollers shall not be used.
      c. Rotor assembly shall be installed on a D-shaped, chrome plated motor shaft and removable without tools.
      d. For tubing installation and removal, rotor assembly shall be rotated by the motor drive at 6 RPM maximum when the pumphead cover is removed. Hand cranking of the rotor assembly shall not be required.
      e. Pump head and tubing compression surface shall be corrosion resistant Valox thermoplastic.
      f. The pump head cover shall be clear, polycarbonate thermoplastic with an integral ball bearing fitted to support the overhung load on the motor shaft. Cover shall include an imbedded magnetic safety interlock which will limit the motor rotation to 6 RPM when removed.
      g. Cover shall be positively secured to the pump head using a minimum of four thumb screws. Tools shall not be required to remove the pump head cover.

   2. Pump Tube Assembly
      a. To ensure performance and accuracy, only tubing provided by the manufacturer is acceptable
      b. Pump tube shall be assembled to connection fittings of PVDF material.
      c. Connection fittings shall be permanently clamped to the tubing with stainless steel clamps or over molded directly to the tubing. To prevent tubing misalignment and ensure accuracy, fitting shall insert into keyed slots located in the pump head and secured in place by the pump head cover.
      d. Connection fittings shall be ½" M/NPT

J. Safety
   1. The pump materials in contact with liquid shall be certified to NSF Standard 61 Drinking Water Systems Components, UL standard 778 motor operated pump and CSA standard C22.2 process control equipment.
   2. The pump hall be manufactured to ISO 9001:2015 requirements and processes.
   3. Tube Failure Detection (TFD) system sensors shall be wholly located in the pump head
   4. Pump head cover shall include an imbedded magnetic safety interlock which will stop the pump when removed. Pump rotor speed shall be limited to 6 RPM when the cover is removed.

K. Peristaltic Metering Pump Drive System
   1. Drive System shall be factory installed and totally enclosed in NEMA 4X, (IP66) wash-down enclosure. Drive shall e capable of operating on any input power from 110 VAC to 240 VAC, 50/60Hz single phase supply without user configuration or selection switches.

2. Motor
    a. Reversible, brushless DC gear motor rated for continuous duty.
    b. Motor shall include overload protection
    c. The maximum gear motor RPM shall be 125 RPM.

3. Enclosure
    a. Bottom housing shall be pressure cast aluminum with acidic liquid iron phosphate three-stage clean and coat pretreatment and exterior grade corrosion resistant polyester polyurethane powder coat.
    b. Top housing shall be structural foam molded Noryl engineered thermoplastic.
    c. Rated NEMA 4X (IP66).
    d. Provided with 316SS floor/shelf level mounting brackets and hardware. Optional: provide extended height brackets for mounting pump 4.5 inches above grade level. (Engineer to specify)
    e. M12 receptacles shall be located at the rear of the pump for input and output signals.
    f. RJ45 receptacle shall be located at the rear of the pump for use with EtherNet/IP and Modbus TCP/IP
    g. One M12 receptacle shall be located at the rear of the pump for use with Profibus

4. Control Circuitry:
    a. All control circuitries shall be integral to the pump and capable of adjusting the pump motor speed from 0.01% to 100.0% in 0.01% increments less than 10% motor speed, in 0.01% and in 0.1% increments greater than 10% motor speed (10,000:1 turndown ratio).
    b. The pump output shall be capable of being manually controlled via front panel touchscreen. The pump motor speed shall be adjustable from 0.01% to 100.0% in 0.01% increments less than 10% motor speed and in 0.1% increments greater than 10% motor speed.
    c. The pump output shall be capable of being remotely controlled via 4-20mA analog input. The input resolution shall be 0.01 of input value and capable of adjusting the pump motor speed from 0% to 100.0% motor speed in 0.1% increments. Four values shall be user configurable to define the low and high points on the output slope: a low input value, the required pump percentage of motor speed at the low input value, a high input value, the required pump percentage of motor speed at the high input value.
    d. The pump output shall be capable of being controlled via EtherNet/IP, Modbus TCP/IP, or Profibus. Device configuration shall be as follows:
    e. The pump shall be capable of dispensing upon demand. The dispensing shall be manually triggered by pressing the front panel start button or by inputting a contact closure. The dispensing volumes shall be adjustable from 1 to 99999.9 milliliters. The pump motor speed during the dispensing cycle shall be adjustable from 0$ to 100.0% motor speed on 0.1% increments.
    f. Provide a front panel touchscreen control for stop/start, configuration menu access and navigation, operating mode selection, display options selection, tube info data, and reverse direction.
    g. Provide a multi-color LCD touchscreen display for menu driven configuration settings, pump output value, service alerts, tube failure detection (TFD) system and flow verification system (FVS) alarms status, remote input signal values, tubing life timer value. Display color shall be green when indicating run operation, blue when in idle, yellow when in stand-by, and red to indicate an alarm condition exists.

h. Provide for remote stop/start pump via 6-30 VDC powered loop or non-powered contact closure loop.
i. Provide a user selectable 4-20mA and 0-1,000Hz output signal which are scalable and proportional to pump output volume.
j. Provide four contact closure alarm outputs. Three rated at 1A-115VAC, 0.8A-30VDC and one rated at 6A-250VAC, 5A-30VDC. Each alarm output shall be assignable to monitor any of the following pump functions: TFD system, FVS system, motor run/stop, motor failed to respond to commands, motor is running in reverse, general alarm (TFD, FVS, and/or motor over current), input signal failure, output signal failure, remote/local control status, revolution counter (tube life) set-point, or monitor which of the nine different pump operating modes is currently active.
k. Provide a four-digit password protected configuration menu.
l. Provide a flow verification system with programmable alarm delay time from 1-1000 seconds. FVS system shall monitor the FVS flow sensor while pump is running only. System shall not monitor pump while not running.
m. Provide a user programmable maximum RPM (revolutions per minutes) set-point value.
n. Provide a user adjustable response delay time from 0 to 999.9 seconds for the remote start/stop input and the four contact closure alarm outputs to facilitate closed-loop applications.

5. Provide a power interruption pump restart option which is user programmable to either automatically restart or require a user re-start if AC mains power is interrupted.

6. Flow Verification Sensor
   a. Flow Verification Sensor shall output high-speed digital pulse signal or 4-20 mA, while pump is running only, to verify chemical injection.
   b. Flow verification sensor shall be an ultrasonic transit time sensor
   c. Wetted components shall be PVDF, PEEK< and TFE/P.
   d. End Fittings shall be PVDF with optional PVC slip fittings. All shall be included
   e. Sensor operating range shall be 0.158 GPH-79.2 GPH.
   f. Shall provide a scalable 4-20 mA sourcing output
   g. Shall provide a programmable Form C Solids State Relay rated for a maximum load capacity of 24 VDC and 100 mA
      1) Programmable for high/low flow rate alarm
      2) Programmable to energize on specified flow total

L. Capacity:
1. Caustic – 30% (wt./wt.) NaOH Peristaltic Pump (P-501A/B/C)
   a. Discharge Capacity: Raw Water pH Adjustment
      1) Design Flow: 1.3 gph, Range: 0.0033-33 gph
      2) Discharge Pressure: Design: 39 psig

   b. Discharge Capacity: Finished Water pH Adjustment
      1) Design Flow: 1.3 gph, Range: 0.0033-33 gph.
      2) Discharge Pressure: Design: 10 psig

   c. Process Fluid Viscosity: 79 cP
   d. Pump Tubing: Blue-White Flex-A-Prene: NEE, 0.0004-4.76 gph, 110 PSI

e. Triplex pump system: One on RW pH Adjustment, One on FW pH Adjustment, Common Standby. All pumps and tubing shall be sized based on the injection point with the higher discharge pressure.

2. Coagulant (PAX-XL19) Peristaltic Pumps (P-502A/B/C)
   a. Pump Capacity - Flow: Design: 2.9 gph, Range: 0.0033-33 gph
   b. Pump Capacity - Discharge Pressure: Design: 39 psig
   c. Process Fluid Viscosity: 10-30 cP
   d. Pump Tubing: Blue-White Flex-A-Prene: NEE, 0.0004-4.76 gph, 110 PSI
   e. Duplex pump system: One on, One Standby

3. Orthophosphate Peristaltic Pumps (P-503A/B)
   a. Pump Capacity - Flow: Design: 0.21 gph, Range: 0.0033-33 gph
   b. Pump Capacity - Discharge Pressure: Design: 10 psig
   c. Process Fluid Viscosity: <2 cP at 70°F
   d. Pump Tubing: Blue-White Flex-A-Prene: ND. 0.0002-2.10 gph, 125 PSI
   e. Duplex pump system: One on, One standby

4. Hypochlorite Peristaltic Pumps (P-703A/B/C)
   a. Pump Capacity: Injection Point 1
      1) Design Flow: 24 gph, Range: 0.0033-33 gph
      2) Discharge Pressure: Design: 39 psig
   b. Pump Capacity: Injection Point 2
      1) Design Flow: 24 gph, Range: 0.0033-33 gph.
      2) Discharge Pressure: Design: 10 psig
   c. Process Fluid Viscosity: Approximately 1 cP
   d. Pump Tubing: Blue-White Flex-A-Prene: NK, Sized for 0.0033-33 gph, 125 PSI
   e. Triplex pump system: One on hypochlorite injection point 1, One on hypochlorite injection point 2, Common standby. All pumps and tubing shall be sized based on the injection point with the higher discharge pressure.

2.2 SKID-MOUNTED FEED SYSTEM

A. The skid mounting of the metering pumps shall conform to the following requirements
   1. Each chemical feed system shall be completely assembled, mounted, calibrated, tested, and delivered to the site on a single skid. Skids shall be manufactured to be mounted on walls. Components to be mounted on the skid are as indicated on the Process and Instrument Drawings and shall include where shown the metering pump, calibration column, piping, valves, piping accessories (pulsation dampeners, pressure relief valves, etc.), and wiring integral to the skid. The skid supplier shall be responsible for providing all equipment, valves, and piping withing the skid boundary.
   2. The skids shall be constructed of HDPE with adequate supports for all equipment and piping and ½" drip lip. Triplex Skids shall have a horizontal surface for mounting the pump and a vertical back wall for mounting piping and accessories. Flat skids with no back wall are prohibited. Side walls that restrict pump access are prohibited. All piping and other accessories shall be supported using FRP channel supports.
   3. Equipment shall be arranged for ease of maintenance and operation. Pumps shall be oriented so that both the display panel and pump head are accessible from the front of the pump skid (i.e., rotated sideways). Suction and discharge piping shall be orientated so that it does not impeded access to the pump or motor. No piping, pulsation dampeners, supports, etc. shall be within 1-ft on any side or on top of the motor.

4. All components of the skid-mounted system (pumps, piping, and controls) shall be tested prior to start-up. If skids are fabricated in shop by pump supplier, they shall be tested at the shop prior to shipping.
5. All components of the skid mounted system (pumps, piping, and valves) shall be constructed from materials compatible with the chemical service.
6. Skid-mounted accessories to include the following
    a. Calibration Column
        1) Provide one, clear plastic calibration column with vent for use in calibrating the metering pumps.
        2) The chamber shall be sized to give adequate capacity for a minimum 30 second draw down test at maximum pump capacity.
        3) The scale shall give direction readings in both mL/s and GPH without the need for calculations
        4) The top of the chamber shall have a threaded fittings to allow for piping to a vented drain system.

    b. Pulsation Dampeners
        1) Peristaltic pumps do not require pulsation dampeners.

    c. Pressure Relief Valves
        1) Backpressure Valves: Adjustable diaphragm backpressure sustaining valve, Type PRV730, installed at point of connection and field adjusted. Materials to be suitable for rated chemical service. Chemical metering pump supplier to provide all backpressure valves shown for chemical feed service.
        2) Pressure Relief Valves: Adjustable diaphragm pressure relief valve, Type PRV740, installed externally on pump discharge header and factory adjusted to pressure recommended by manufacturer. Material to be suitable for respective chemical service. Chemical metering pump supplier to provide all pressure relief valves shown for chemical feed service.
        3) Backpressure Valves are not required for peristaltic pump skids.

    d. Pressure Gauge and Diaphragm Isolators:
        1) Provide a pressure gauge and diaphragm type chemical isolation suitable for each chemical service.
        2) Range of pressure gauge as indicated on the drawings.

    e. Sight Glass
        1) Provide a clear sigh glass with visual flow indicator on the pressure relief discharge. Materials to be suitable for chemical service.

    f. Valves:
        1) Ball valves provided are to be as indicated on the Process and Instrument Drawings. For hypochlorite service, ball valves are to be vented via a factory-drilled hole in the downstream side of the ball. Field drill of ball valve vent holes is prohibited.

        2) All valves used in sodium hydroxide service shall have EPDM O-rings. All EPDM valves shall be NSF-61 certified for use in potable water systems.

    g. Manufacturer:
        1) Triplex Skids: Blue-White CHEM-FEED Municipal Plastic Triplex Skid System (CFPS-3) or Approved Equal.

2) Duplex Metering: Blue-White CHEM-FEED Municipal Plastic Duplex CFWS-2, CFPS-2, or Approved Equal.

PART 3 - EXECUTION

3.1 INSTALLATION

A. Installation shall satisfy written instructions of the supplier.

3.2 FIELD QUALITY CONTROL

A. Section 017000 - Execution and Closeout Requirements: Requirements for testing, adjusting, and balancing.

B. Pre-operational Check: Before operating system or components, vent air from system to ensure water in pump.

C. Startup and Performance Testing:
1. Test metering pump flow rate by measuring time to fill or by draining calibration column with potable water.
2. Operate each chemical feed system on clear water for continuous period of four hours.
3. Hydrostatically test system piping for leaks at 50 psig.

D. Equipment Acceptance:
1. Adjust, repair, modify, or replace components failing to perform as specified, and rerun tests.
2. Make final adjustments to equipment under direction of manufacturer's representative.

E. Furnish installation certificate from equipment manufacturer's representative attesting that equipment has been properly installed and is ready for startup and testing.

3.3 DEMONSTRATION

A. Manufacturer’s Representative
1. The training time shall not be included in the start-up, adjusting, and testing time.

B. Manufacturer’s Field Services
1. Manufacturer shall inspect system before initial start-up and certify that the system has been correctly installed and prepared for start-up.
2. Demonstrate system control functions and alarms.

Minimum Requirements		
Description	Man Days	Trips to Site
Instruct Installation Contractor and Inspect Work	0.5	1
Start-up Testing	0.5	1
Training	0.5	Incl. In Start-up
Totals	1.5	2

END OF SECTION

SECTION 46 33 83– LIQUID CHEMICAL FEED ACCESSORIES AND SAFETY EQUIPMENT

PART 1 -- GENERAL

1.1 REQUIREMENTS

A. The CONTRACTOR shall provide chemical injection materials and accessories for use with 0.8% Sodium Hypochlorite solution, 30% (w/w) Sodium Hydroxide, KEMIRA PAX XL-19 Coagulant, and neat liquid Zinc Orthophosphate in accordance with the Contract Documents.

B. The CONTRACTOR shall provide eight (8) 330-gallon Intermediate Bulk Container totes suitable for use with 30% (w/w) Sodium Hydroxide (NaOH).

C. The CONTRACTOR shall provide eight (8) 330-gallon Intermediate Bulk Container totes suitable for use with Kemira PAX XL-19 Coagulant.

D. The CONTRACTOR shall provide four (4) 55-gallon chemical drums with secondary containment suitable for use with neat, liquid Zinc Orthophosphate.

1.2 SUBMITTALS

A. Product Data:
   1. Submit data completely describing product, including detailed scope of supply, detailed bill of materials and annotated specification sheets of all components.

B. Shop Drawings:
   1. Submit detailed specifications and shop drawings including dimensions and weights.
   2. Submit wiring, control schematics, and control logic diagrams for all electrical and control components furnished.

C. Provide detailed Operations and Maintenance Manuals including storage, installation start-up and operating instructions. Provide safety precautions and warnings of all hazards operating equipment.

1.3 WARRANTY

A. Warranty: CONTRACTOR shall provide equipment warranties as defined in Section 460100 – Equipment general Provisions.

PART 2 -- PRODUCTS

2.1 GENERAL - MATERIALS

A. Materials used in the equipment shall be suitable for the intended application.

B. Materials not specifically called for shall be of high-grade, standard commercial quality, free from defects and imperfections that might affect the serviceability of the product for the purpose for which it is intended.

C. Corrosion Resistance
   1. Materials used in the construction of chemical feeding equipment shall be resistant to corrosive attack from the chemicals.
   2. The following table lists the most commonly used chemicals and some of the suitable materials for the construction of chemical feeding equipment.

3. Unless the manufacturer proposes more suitable materials, adhere to the materials listed in the table.

CHEMICAL	SUITABLE HANDLING MATERIAL
Kemira PAX XL-19	PVC, CPVC PFA Polypropylene PTFE
0.8% Sodium Hypochlorite	PVC, CPVC PFA Polypropylene Viton® EPDM Halar Tefzel® Teflon®
30% Sodium Hydroxide	PVC, CPVC PFA Polypropylene PTFE EPDM
Zinc Orthophosphate	PVC, CPVC PVDF PFA Polypropylene PTFE

2.2 CHEMICAL STORAGE

A. The CONTRACTOR shall provide eight (8) 330-gallon Intermediate Bulk Container (IBC) totes suitable for use with 30% (w/w) Sodium Hydroxide (NaOH) and eight (8) 330-gallon Intermediate Bulk Container totes suitable for use with Kemira PAX XL-19 Coagulant obtained from a certified chemical supplier.
   1. IBC totes shall be constructed of an internal high-density polyethylene (HDPE) internal tank that is containerized and supported by a galvanized steel protective cage.
   2. High density polyethylene shall be blow-molded fabricated from virgin HDPE resin that is FDA certified food grade, ANSI/NSF 61 certified, BPA free, UV stabilized, and approved for potable water and consumable-based cargo.
   3. IBC totes shall have a volume of 330 gallons. IBCs shall be fabricated to nominal tank thicknesses approved for storing dense liquids up to 1.9 specific gravity.
   4. IBC totes shall measure 48”L x 40”W x 53” H.
   5. IBC totes shall feature 4-way movement channels for multi-directional mobility by equipment such as pallet jacks and forklifts.

6. IBC totes shall have 6” vented, threaded screw cap inlet ports and 2” polypropylene discharge ball valves with male quick disconnect cam coupler.
7. IBC totes shall be stackable to 2 high minimum.
8. IBC totes shall be located above concrete secondary containment basins as indicted on the drawings. Concrete secondary containment basins shall be coated as indicted on the drawings and specifications.
9. IBC totes shall be labeled by chemical supplier according to local, state, and federal regulations.
10. For chemicals stored in IBC totes, The CONTRACTOR shall provide two (2) dry disconnect assemblies per chemical as indicated on the drawings.

B. The CONTRACTOR shall provide four (4) 55-gallon chemical drums with secondary containment suitable for use with neat, liquid Zinc Orthophosphate obtained from a certified chemical supplier.
1. 55-gallon drums shall be constructed of FDA certified, food grade high-density polyethylene and be ANSI/NSF 61 certified.
2. 55-gallon drums shall be tight lid.
3. 55-gallon drums shall have standard dimensions.
4. 55-gallon drums shall have two (2) 2-inch NPT connections.
5. 55-gallon drums shall be labeled by chemical supplier according to local, state, and federal regulations.
6. 55-gallon drums shall be located on top of a plastic secondary containment with a containment capacity suitable for four (4) 55-gallon drums.
7. Containment Capacity shall be 66-gallons minimum.

C. Bulkhead, Valves, and Fittings
1. All bulkheads, valves and fittings shall be provided by the storage tank manufacturer and shall be constructed of an appropriate material for the storage and transfer of the chemical stored.
2. The tank connections shall allow for bulk chemical fill connections, tank venting, tank drain, and pump suction tubing.
3. All connections shall be watertight, threaded connections shall be minimized.
4. IBC tote to chemical metering pump suction piping connection assemblies shall be provided as indicated on the drawings.
5. 55-gallon drum to chemical metering pump suction piping connection assemblies shall be provided as indicated on the drawings.

2.3 CHEMICAL STORAGE LEVEL INDICATION

A. IBC Chemical Totes
1. The IBC tote connection assembly shall include a pressure transducer as indicated on the drawings and instrument list to continuously monitor the level in the duty IBC tote.

B. 55-gallon Drums
1. 55-gallon drums shall have non-contact, ultrasonic drum level sensors as indicated on the drawings and instrument list to continuously monitor the level in the duty 55-gallon drum.

2.4 CHEMICAL TRANSFER TUBING

A. Chemical transfer tubing shall be 1/2” ID x 3/4” OD reinforced, braided PVC tubing.

B. Chemical transfer tubing shall have a minimum working pressure rating of 200 psig at 75°F.

C. Chemical transfer tubing shall be clear, flexible, and continuous run.

D. Chemical transfer piping shall be routed through 3” Schedule 80 PVC secondary containment piping. Schedule 80 PVC secondary Chemical secondary piping shall be solvent welded. Joints in secondary containment piping shall not be located doorways or common travel ways.

2.5 BACKPRESSURE AND ANTI-SIPHON VALVES

A. Backpressure valves are not required for peristaltic pump operation.

2.6 CHEMICAL INJECTION QUILLS

A. Retractable, PVC injection quills with integral check valve, and stainless-steel safety and retraction chains.

B. Process Connection: ½” Male NPT standard or to match static mixer injection port.

C. Inlet Connection Size: ½: Female NPT

A. Quill Materials:
   1. Body: PVC
   2. Ball Valve: ½” PVC
   3. Check Valve:
      a. Integral. Hastelloy C0276 Spring,
      b. Ceramic ball
      c. EPDM O-ring seal
      d. Cracking pressure shall not exceed 5 psi.
   4. Seal Type: Viton

D. Insertion Length: To centerline of flow path

E. Stinger Tip: 45 Degree Bevel

F. Manufacturer: Koflo QR-0.5P or equal.

2.7 SAFETY SPRAY SHIELD/GUARDS:

A. All chemical tubing outside of secondary containment piping that is located above 5.0’ shall have safety spray shield/guards on all couplings, fittings, and other connections to contain temporary leaks or sprays. The spray shields/guards shall be constructed of a material resistant to the chemical in the feed line, manufactured by Ramco, Drake Specialties or approved equal.

2.8 CHEMICAL FEED PIPE LABELING AND SIGNAGE

A. All Chemical feed piping shall be identified with a label every ten (10) feet and with at least two labels in each room, closet, or pipe chase.

B. The chemical feed area shall be equipped with proper warning signs requiring the use of goggles and personnel protective equipment near chemical pumps, chemical storage areas and uploading areas.

2.9 PORTABLE SUMP PUMPS

A. Three portable sump pumps are required, one for the caustic room, one for the acid room, and one for the main treatment room. These pumps are “on the shelf” and not installed. Pumps shall be labeled for intended use as: ACID ONLY, BASE ONLY, W/WW ONLY.

B. Pumps shall be bottom suction type, plastic or 316 SS construction suitable for chemical service, and sized to fit into the 12” diameter sump space as shown on the structural foundation drawings.

C. Pumps shall be provided with 15 feet of minimum 1” discharge hose and all fittings required to attach to pump discharge. Hose shall be compatible with all chemicals at the facility. Hose shall include inline pump discharge check valve.

D. Pumps shall be provided with a minimum of 20 feet of 120v power cord with NEMA 5-15 plug, sealed for use in a wet environment.

E. Pumps shall be rated for a minimum of 1,200 gph at 15 ftTDH.

F. Goulds LSP0311F or Engineer approved equal.

2.10 PERSONAL PROTECTIVE EQUIPMENT

A. Three complete sets of the following items are required with one set located in each of the following: chlorine generation room, acid room, and caustic room.

B. 1 pair of shoulder length, neoprene gloves, size XL

C. 1 nitrile rubber apron, full coverage to shin length

D. 1 Full face shield, 8 inch minimum.

PART 3 -- EXECUTION

3.1 INSTALLATION

A. General installation requirements shall be in accordance with Section 460100 – Equipment General Provisions.

B. All components of the respective chemical feed system should be supplied from the same supplier for an appropriately integrated and supported system.

C. The chemical feed systems and related equipment will be installed by the CONTRACTOR in strict adherence with the manufacturer's instructions. The manufacturer shall also provide a qualified service representative for startup, testing and operator training. The representative’s services shall be retained until the equipment is operating to the satisfaction of the ENGINEER.

D. CONTRACTOR shall pay strict attention to the installation of the pipe and fitting connections to the chemical feed pumps to prevent overtightening and damaging of the pump head and/or fittings. Any such damage caused by the CONTRACTOR’s installation shall be cause for replacement of the damaged materials at the CONTRACTOR’s expense.

3.2 TESTING

A. The CONTRACTOR shall completely fill the bulk chemical storage tank with potable water and allow the tank to set for a minimum of 4 hours. Over which time period, the tank connections shall be observed for leakage. If any leaks are observed, the CONTRACTOR shall repair or replace the defective pipes or fittings with sound material and complete the test again.

B. Upon successful completion of the test, the CONTRACTOR shall remove all water from the chemical storage and fill the tank with the required amount of sodium hypochlorite solution. All fitting and connection shall again be observed for leakage and repair/replaced if necessary, by the CONTRACTOR.

C. An acceptable leak test shall have zero leakage.

D. The Engineer shall be notified at least 48-hours prior to testing and shall be present for the duration of the water and solution leak testing.

END OF SECTION

Wrangell WTP

PROCESS DESIGN CRITERIA

17805-PR-EDS-001

Project No: 17805

City & Borough of Wrangell

C	21-Feb-23	Re-Issued for Design	SB	AS	PC
B	09-Feb -23	Issued for Design	SB	AS	PC
A	3-Jan-23	Issued for Review	SB	AS	PC
Rev	**Date**	**Rev Description**	**Originator**	**Checker**	**Approver**

CONTENTS

1. INTRODUCTION 3
1.1. Scope 3
1.2. Abbreviations/ Acronyms 4
1.3. Codes and Standards 5
1.4. Units of Measure 6
1.5. Water Sources 8
1.6. Water Quality Standards 8
1.7. Mechanical Selection Criteria 10
1.8. Hydraulics/Piping Selection Criteria 11
1.9. Painting and Protective Coatings 11
1.10. Insulation 12
1.11. Process Equipment 12
1.12. Actuated Valve Fail Position 12
2. DAF AND GRAVITY FILTERS TREATMENT PLANT 14
2.1. Process Description Summary 14
2.2. Rapid Mixer Design Criteria 14
2.3. DAF Design Criteria 15
2.4. Recycle/Saturator System Design Criteria 15
2.5. Air Compressor System Design Criteria 15
2.6. Gravity Filters Design Criteria 16
3. MISCELLANEOUS DESIGN PARAMETERS 17
3.1. Ambient Site Conditions 17
3.2. Structural Design Conditions 17
3.3. Operational Intervention 17
APPENDIX 18
A.1 Hydraulic Elevation Sketch 18

1. INTRODUCTION

1.1. Scope

The scope of the Wrangell WTP is to install one two stage rapid mix and flow distributor, three, parallel Flocculation and DAF (Dissolved Air Flotation) clarifier trains (1, 2 and 3) and two gravity filter trains (A and B) consisting of a total of six filters (three filters per train). Each of the DAF trains comprises of a dedicated recycle/saturator system which includes a single recycle pump and saturator vessel. Each of the six filters have independent effluent pipe spool for effluent, rinse, and backwash operations per compartment. The new trains are designed to operate with automated and manual controls. The equipment will come with a local control panel (located on DAF Tank #2) equipped with a PLC and HMI, and two remote control panels (each located on the two filter tanks). All panels will be accessible from the raised platform only.

This design basis outlines the overall design parameters and criteria to be adopted in the selection of process equipment and systems used for the project.

The following relevant systems are found in the “Wrangell WTP” project:

- Rapid Mixer and Flow Distributor,
- Flocculation and DAF Clarifier,
- Dual Media Gravity Filter,
- Effluent and Filter to Waste Control and
- Backwash Supply (by others)

These criteria will discuss all the new process equipment to be supplied by AWC.

1.2. Abbreviations/ Acronyms

Abbreviation	Definition
AO	Aesthetic Objective
CU / TCU	Color Units / True Color Units
DAF	Dissolved Air Flotation Clarifier
GPM	US Gallons per Minute
HMI	Human Machine Interface
HOA	Hand/Off/Auto
ITP	Inspection Test Plan
LCP	Local Control Panel
MAC	Maximum Acceptable Concentration
MAWP	Maximum Allowable Working Pressure
MGD	Mega (US) Gallons per Day
NTU	Nephelometric Turbidity Unit
P&ID	Piping and Instrumentation Diagram
PLC	Programmable Logic Controller
RCP	Remote Control Panel
SCADA	System Control and Data Acquisition
STP	Standard Temperature and Pressure
VFD	Variable Frequency Drive
WTP	Water Treatment Plant

1.3. Codes and Standards

Systems and equipment will be designed in accordance with applicable codes, standards, and local, state, and federal regulations, in effect at the date of execution of the contract. Codes, standards, and regulations will be referenced as required in the relevant technical specifications and calculations. In some cases, equipment may be purchased based on other standards or codes that the Client considers suitable.

In case of conflict among this Design Basis Document, referenced codes and standards, and manufacturer's standard practices, the Client and AWC will mutually agree on which will govern. Where conflicts exist between specifications, codes and standards, the following descending order of precedence will apply:

- Government or Local Requirements
- Project Data Sheet
- Project Equipment Specification
- Company Standard Specification
- Industry Standard

Any deviation from listed codes and standards may occur only with Client approval. The organizational bodies that govern the applicable codes, standards and regulations include, but are not limited to the following:

- ANSI – American National Standards Institute
- ASME – American Society of Mechanical Engineers
- ASTM – American Society for Testing and Materials
- AWWA – American Water Works Association
- CSA – Canadian Standards Association
- ISA – Instrument Society of America
- ISO – International Standards Organization
- UL – Underwriters Laboratories, Inc.

1.4. Units of Measure

Category	Units	Useful Conversions
Acceleration	Feet per second squared – ft/s^2	ft/s^2 x 0.3048 = m/s^2
Acceleration - Standard	32.174 ft/s^2	
Air Flow	Std. cubic feet per min – scfm (60 °F, 14.7 psia)	scfm x 1.699 = Sm^3/h
Areas	Square feet – ft^2	ft^2 x 0.09290 = m^2
Concentrations	Parts per million - ppm, Parts per billion - ppb	
Density	Pound per cubic feet - lb/ft^3	lb/ft^3 x 16.02 = kg/m^3
Specific Gravity	Compared to water or air – SG	
Distance	Feet – ft Mile – mi	ft x 0.3048 = m mi x 1.609 = km
Energy	British thermal unit - BTU,	BTU x 1.054 = kJ
Flow	US gallons per minute – gpm US million gallons per day - MGD	gpm x 0.2271 = m^3/h gpm x 0.06309 = L/s gpm x 694.4 = 1 MGD
Lengths	Inch - in, Feet – ft	in x 25.4 = mm ft x 0.3048 = m
Loading	Gallons per minute per square foot – gpm/ft^2	gpm/ft^2 x 2.445 = $m^3/h/m^2$ = m/h
Power	Horse-Power - HP	HP x 0.746 = kW
Pressure (a – absolute, g – gauge, d - differential)	Pound per square inch – psi (psia, psig, psid) Atmosphere – atm	PSI x 6.895 = kPa
Pressure - Standard Atmosphere	14.70 psia	
Speed	Feet per second – ft/s Mile per hour – mph	ft/s x 0.3048 = m/s mph x 1.609 = km/h
STP	Standard Temperature and Pressure 15 °C @ 101.325 kPaa or 60 °F @ 14.7 psia	

Category	Units	Useful Conversions
Temperature	Degrees Fahrenheit - °F Degrees Celsius - °C	°C = (°F – 32)/1.8 °F = °C x 1.8 +32
Viscosity	Centipoise – cP (absolute) Centistokes – cSt (kinematic) pascal-second - Pa·s	
Volume	Cubic feet – ft^3 US Gallon – gal	gal x 3.785 = L ft^3 x 28.32 = L
Weight	Ounce – oz, Pound – lb	lb x 0.4536 = kg oz x 28.35 = g

1.5. Water Sources

The table below provides a summary of the design flow conditions for the new WTP as received by AWC at time of the proposal and supporting documents (Client Specification Section 46 21 10).

System	Inflow Rate
Finished Water Flowrates from WTP:	
Peak Flow for the WTP	2.26 MGD (1600 gpm)
Start Up Conditions Average Flow	0.71 MGD (500 gpm)
Minimum Flow	0.5 MGD (350 gpm)
DAF Train Flowrates:	
Maximum Design Flow per DAF Train	800 gpm
Minimum Design Flow per DAF Train	500 gpm
Dual Media Gravity Filter Flowrates:	
Maximum Flow Rate per Filter Train	942 gpm
Maximum Flow Rate per Filter Chamber (each filter train tank is divided into three chambers)	314 gpm

NOTE: WTP peak capacity of 2.26 MGD will be achieved by having two flocculation/DAF units in service and five filters. One flocculation/DAF unit and one filter are available as standby.

1.6. Water Quality Standards

The raw water is conveyed from Wrangell Lower Reservoir and the Wrangell Upper Reservoir by gravity. The Watershed is mountainous with heavy evergreen and deciduous tree coverage. The specifications for influent raw water quality used for the design of AWC's equipment is captured from the bid package and is defined in the tables below:

Parameter	Units	Peak	Average	Minimum
Temperature	(°C)	17	8.5	3.1
Turbidity	NTU	12	1.7	0.3
Total Dissolved Solids	mg/L	-	34	-
Color	TCU	145	76.2	0.9

Parameter	Units	Peak	Average	Minimum
pH		7.0	6.1	5.1
Alkalinity (mg/L as $CaCO_3$)	mg/L	10	9	-
Hardness (mg/L as $CaCO_3$)	mg/L	10	9	-
Iron	mg/L	-	1.0	-
Manganese	mg/L	-	0.1	-
Total Organic Carbon	mg/L	6.4	5.9	5.3
Dissolved Organic Carbon	mg/L	6.1	5.0	3.9

The specifications for treated water quality to meet the proposal package criteria are given in the tables below:

Parameter	Units	95% Compliance	100% Compliance
Turbidity	NTU	Less than 0.1	Less Than 1
Total Dissolved Solids	mg/L	Less than 35	Less than 500
Color	TCU	Less than 30	Less than 15
pH		7.5-8.5	6.5-8.5
Alkalinity (mg/L as $CaCO_3$)	mg/L	125-175	N/A
Hardness (mg/L as $CaCO_3$)	mg/L	125-175	N/A
Iron	mg/L	Less than 0.2	Less than 0.3
Manganese	mg/L	Less than 0.03	Less than 0.05

Further the WTP shall achieve a 2.5 log (99.6%) removal of particles in the 3-5 µm (Cryptosporidium) size range and 2.5 log (99.6%) removal of particles in the 5-15 µm (Giardia) size range.

NOTE: Section 3.03.B.2. of the Client specification documents states that during the start up and commissioning 7-day period, if the packaged water treatment plant is unable to meet the finished water quality, a subsequent 7-days trip will be required to meet the performance requirements. Without the chemical feed systems within the AWC scope, there is a limit to AWC's responsibility for the finished water quality. AWC takes responsibility for the water quality to the extent the AWC scope provides contribution and will take responsibility for such. However, if failure to meet water quality is not the fault of AWC's equipment, and AWC is asked to be on site, subsequent 7-day trips will be charged at AWC standard field work rates.

1.7. Mechanical Selection Criteria

The equipment will be robust and fit for heavy-duty applications found in the domestic (indoor site, with conditions per Section 3.1) environment.

All equipment will be conservatively rated and sized to withstand process upsets and variations with a maximum WTP design capacity of 2.26 MGD (1600 gpm), DAF tank design capacity of 800 gpm and filter tank design capacity of 942 gpm (314 gpm per filter chamber).

All equipment will be designed to meet the site design conditions, such as altitude, ambient temperatures, seismic, wind, rain, snow, ice, humidity, and any corrosive surrounding atmosphere.

Wherever possible, standard “off the shelf” equipment and components will be used where it is not specified in the Client proposal document (Client Specification Section 46 21 10).

All materials used in the construction or assembly of equipment will be new and free of any defects. AWC’s Inspection Test Plan (ITP) will be followed and signed off prior to shipping.

Where required for operation, maintenance or cleaning, equipment will be provided with appropriate access. This access may include stairs and/or ladders, walkways and platforms complete with handrails, knee rails and kickboards that comply with the current applicable health and safety regulations.

All equipment will be designed and/or selected in accordance with the process and site condition requirements. Other factors to be considered for equipment selection will include the following:

- Maximization of personnel health, safety, and protection
- Ease of installation, operation, inspection, cleaning, maintenance, equipment removal and repairs
- Minimization of vibration and excessive noise
- Minimization of thermal expansion stresses
- Maximization of standardized components
- Availability of spare parts
- Demonstrate a successful operational history of comparable equipment and components in similar installations.

All equipment heavier than 50 kg/100 lbs shall be provided with lifting lugs or another convenient lifting arrangement.

All mechanical moving parts will be guarded. The design of the guards will allow their removal without having to remove other items of equipment.

All openings, sumps, vessels, bins, hoppers, elevated platforms, or pits that constitute a hazard will be adequately fenced or otherwise guarded.

Equipment will be provided with appropriate access areas where required for operation, maintenance, or cleaning.

To minimize site construction of AWC’s equipment and components where possible, equipment will be modularised into packages and/or skid mounted.

All material transfer points shall be designed for minimize spillage.

1.8. Hydraulics/Piping Selection Criteria

The optimal design pipe velocity for pumped fluids will be 3-6 ft/s to optimize the life of the pipes and eliminate settling. This velocity will dictate the size and head of all piping, valves, and pumps.

Unless detailed hydraulics are available to confirm higher values are acceptable, gravity flow lines are assumed for a velocity less than 4 ft/s.

High point vents and low point drains shall be provided on all piping segments where trapped air could impede flow or where pump hydraulics have assumed pressure recovery due to the syphon effect.

Design pressure for process piping will be between 0 and 150 psig under most conditions. Large bore piping is defined as greater than 2-in nominal diameter, while small bore is defined as 2-in and smaller nominal diameter. Bends will be standard 1 D or 1.5 D radius and shall be used in process piping.

The WTP piping and interconnecting piping between equipment are by others. AWC scope for piping is limited to within the AWC packages which includes DAF float trough spray wash piping inside the tank, filter effluent pipe spool, and piping on the recycle (pump and saturator) skid.

Pipe Service	Material	Connections	Specification
Small Bore DAF Float Spray Wash (Piping inside the tank)	PVC, sch 80	NPT	AWWA C-900
Large Bore Effluent/ Backwash/ Waste Pipe Spool	SS304L, sch 10S	Flanged	-
Recycle Skid Piping	SS304L, sch 10S	Flanged	ASME B31.3

Miscellaneous “out-of-spec” or speciality items not specified in the individual line classes will be identified on P&IDs and drawings with applicable item descriptions.

Various type of valving will be used through the facility depending upon the material transported through a piping. Specific valving is as follows:

- Butterfly Valves – process water, where applicable
- Ball Valves –reagent and service water pipelines
- Control Valves – Control valves will be motor actuated with a fail-close/fail-last position where applicable (as indicated on P&ID and Section 1.12 of this document). Actuators will have visual indication of the valve position. All actuated control valves will come with hand operation capabilities.

Manual valves greater than equal to 150 mm (6”) to include gear box driver. Manual valves located at height of 2.0 m (6.5’) or more to include chain wheel drive.

1.9. Painting and Protective Coatings

Manufacturer standard coating system will be used for all supplied equipment. Any coated surface in contact with water will be NSF approved.

For all fabricated items such as DAF and filter tanks, no painting or priming is required as tanks will be manufactured from marine grade aluminum. Saturator will be epoxy coated steel (NSF) vessel as per Client Specification Section 46 21 10.

All steel plate works for mechanical equipment will have surface preparation, priming and finish coating.

1.10. Insulation

Wherever insulation is required, Supplier's standard insulation will be used.

All other insulation requirements will conform to insulation specification and Health and Safety Regulations.

1.11. Process Equipment

All process systems will be as per this process design criteria (this document) and Piping and Instrument Diagrams (P&IDs).

All process equipment design flow rates should base on the plant design feed rate as specified. No equipment is designed for vacuum service.

1.12. Actuated Valve Fail Position

Various types of actuated valves will be used in the water treatment package and to have automated operation controlled by the PLC, minimizing operator input.

The following table list the actuated valves fail position. During power failure, electrical actuated valves to be switched to their failure position using UPS power.

Valve	Type	Fail Position	Justification
Rapid Mixer Influent Valve (Supplied and powered by others, controlled by AWC Panel)	Flow Control Butterfly (BF) Valve	Fail Close	Prevent rapid mixer tank from overflowing to waste
DAF Tank Influent Valve	On/Off BF Valve	Fail Close	Prevent DAF tank from overflowing to waste
Saturator Air Supply Valve	On/Off Solenoid Valve	Fail Close	Prevent saturator emptying out of water during an upset
Saturator Outlet Valve	On/Off BF Valve	Fail Last	No unsafe position will be created by position of valve
Filter Influent Valve	On/Off BF Valve	Fail Last	No unsafe position will be created by position of valve

Valve	Type	Fail Position	Justification
Filter Air Scour Supply Valve	On/Off BF Valve	Fail Close	Prevent water backflow to blower
Filter Turbidity Analyser Valve	On/Off Solenoid Valve	Fail Close	Prevent filter tank losing water to drain and damage to analyser during upset conditions
Filter Effluent Valve	Level Control BF Valve	Fail Close	Prevent water not meeting quality, from flowing into the clear well
Filter Rinse to Waste Valve	Level Control BF Valve	Fail Close	Prevent filter tank losing water to drain
Filter Backwash Supply Valve	On/Off BF Valve	Fail Close	Prevent backwash supply water to flow into filter tank and protect plenum from possible upset conditions

2. DAF and Gravity Filters Treatment Plant

2.1. Process Description Summary

The following section briefly describes the process and control philosophy of the AWC packaged plant.

The raw water supply is supplied by others but controlled from AWC's control panel. AWC's PLC will receive the flow setpoint to operate the treatment units from Plant SCADA (by others). The raw water will be dosed with chemicals (by others) and will enter AWC's rapid mixer and distributor tank. The flow distributor tank distributes the water flow, evenly among the online DAF units. The number of DAF units to be required online is selected by the Operator on the AWC PLC.

The DAF tank comprises of two stage mechanical flocculation treatment followed by the clarification process. The flocculators are designed to taper down flocculation energy and create pin flocs. Flocculated water then enters the DAF clarifier chamber. Recycle stream saturated with microbubbles enters the clarifier and will lift the floc to the clarifier surface. The resulting float is skimmed. Clarified water flows into the DAF break tank where is goes to the filter trains or is used as recycle water.

Clarified water from all the three DAF tanks will flow into a common header supplied by others. The clarified water is distributed into the online gravity filter tanks for final polishing. In total there are six filter chambers (three per filter tanks A and B), and the number of filter chambers required to be online is selected from the AWC PLC. Water is filtered by dual media filter bed and effluent is collected under the plenum at the bottom of the filter.

Filter backwash is provided to remove floc and debris from the filter media bed. The backwash water supply at the required filter backwash flowrates, is by others. The backwash water supply pressure must be limited to 10 psig at the inlet of the backwash water supply on/off control valve. The backwash system is designed such that only one filter chamber can backwash at a time. Scour air for the filter media backwash is provided by others.

2.2. Rapid Mixer Design Criteria

The following table list the design criteria for the rapid mixers.

Parameter	Value
Number of Mixers	2
Design Flow Rate	1600 gpm
G value	800 s^{-1}
Total Retention Time	30 s

When the WTP flowrate is less than 800 gpm only stage 2 rapid mixer is required to be operational.

2.3. DAF Design Criteria

The following table list the design criteria for the DAF clarifiers.

Parameter	Value
Number of DAF Trains	3
Number of Flocculator per Train	2
Stage 1 Flocculators G Value	100 to 10 s^{-1}
Stage 2 Flocculators G Value	65 to 10 s^{-1}
Flocculation Detention Time	16.46 min
Clarifier Hydraulic Loading	4.71 gpm/ft^2
Clarifier Detention Time	17.48 min

NOTE: The pH of water in the DAF tank to be between 6 and 8 to meet NSF requirements for the aluminum tanks.

2.4. Recycle/Saturator System Design Criteria

There are three recycle/saturator systems, each dedicated to one DAF clarifier comprising of a recycle pump and saturator vessel. The following table list the design criteria for the recycle/saturator system.

Parameter	Value
Recycle Flowrate	80 gpm
Recycle Rate	10%
Recycle Pump Head	80 psig
Saturator Loading	25.46 gpm/ft^2

2.5. Air Compressor System Design Criteria

A common air compressor duplex package with a common receiver will provide air to all the three saturators via piping provided by others. The following table list the design criteria for the air compressor system.

Parameter	Value
Required Air per Saturator	12 mg/L

Parameter	Value
Compressor Air Capacity	16.8 SCFM @ 175 psig

2.6. Gravity Filters Design Criteria

The following table list the design criteria for the dual media gravity filters.

Parameter	Value
Number of Filter Trains	2
Number of Filter Chamber per Train	3
Filter Hydraulic Loading	2.62 gpm/ft²
Filter Detention Time	13.82 min
Filter Media Anthracite Depth	18”
Filter Media Sand Depth	24”
Backwash High-Rate Flow	1920 gpm
Backwash High-Rate Loading	16 gpm/ft²
Backwash Low-Rate Flow	960 gpm
Backwash Low-Rate Loading	8 gpm/ft²
Backwash Water Maximum Pressure	10 psig
Backwash Volume per Filter Chamber	23,929 gallons*
Air Scour Design Flow	360 scfm
Air Scour Design Loading	3 scfm/ft²
Air Scour Pressure (at Filter inlet)	4.5 psig

*This backwash volume is an estimate only. For designing the backwash handling tank, enough safety factor to be considered as the final backwash time may vary and is dependent on water quality and chemicals feed. In cold temperature backwash loading could be lowered to 14.5 – 15 gpm/ft^2.

NOTE: The pH of water in the filter tank to be between 6 and 8 to meet NSF requirements for aluminum tanks.

3. Miscellaneous Design Parameters

3.1. Ambient Site Conditions

Water treatment equipment will be designed for the following conditions:

Indoor Temperature: 59°F to 86°F

Indoor Humidity: 10 to 85 % (non condensate)

The WTP building site elevation is: 262 feet, approximately above mean sea level.

3.2. Structural Design Conditions

The WTP is considered a Risk Category IV structure located on the soils deemed Site Class B-C. The AWC tanks structural design will meet the criteria listed in ASCE 7 Hazards Report.

3.3. Operational Intervention

The DAF treatment units are designed to operate semi-independently. Some functions such influent flow control, effluent level control, air scour blower start/stop, train start/stop, etc., will be implemented by AWC supplied PLC integrated with the Plant SCADA, by others.

The Water Treatment Operator is expected to monitor the plant daily during normal rounds to ensure all equipment is operating properly.

Alarms from the AWC system will be routed to the Plant SCADA to alert the Operator of issues or failure of devices in the AWC package.

Drains are also provided in each section to allow the entire train to be drained and cleaned.

Chemical (by others) levels in storage should also be monitored from the Plant SCADA on a regular basis to ensure delivery of replacement chemicals prior to tripping the AWC units, by others.

APPENDIX

C

A.1 Hydraulic Elevation Sketch

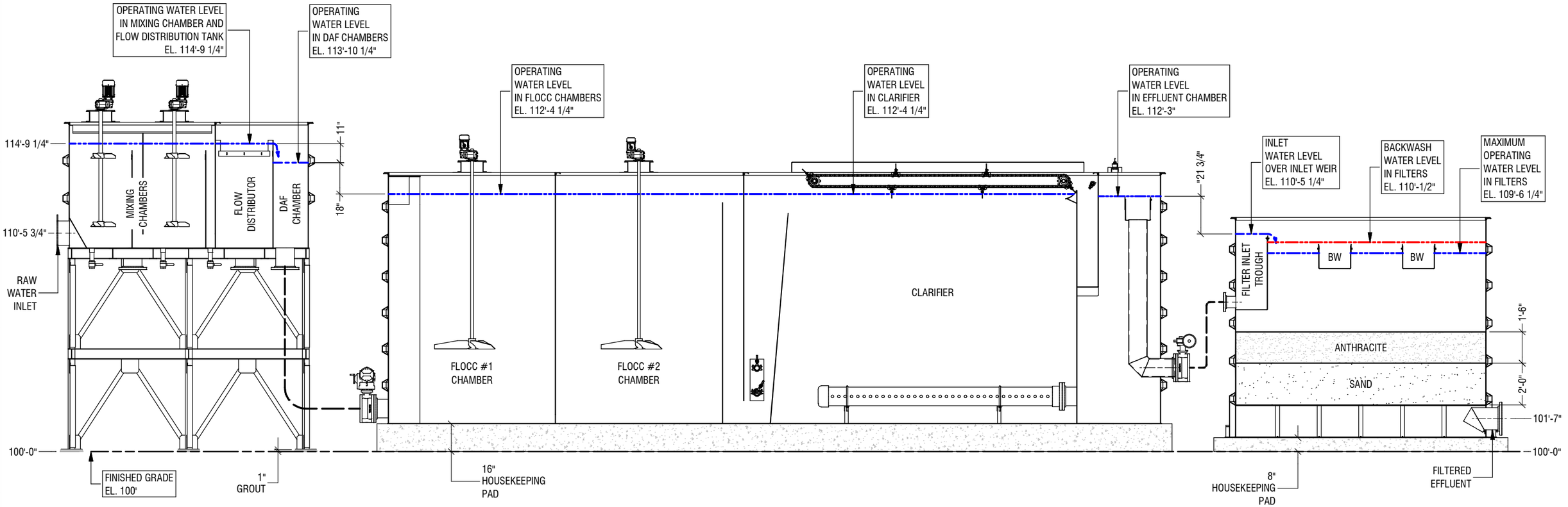

HYDRAULIC ELEVATIONS
THROUGH WATER TREATMENT PLANT
(NOTE 1)

NOTES:

1. LAYOUT SHOWN ABOVE IS NOT REPRESENTATIVE OF THE ACTUAL SITE LAYOUT. THIS IS ONLY FOR ILLUSTRATION PURPOSES TO SHOW THE HYDRAULIC FLOW THROUGH THE WATER TREATMENT PLANT.

ENGINEER'S SEAL

REV	DESCRIPTION	DATE	BY	CHK	APP
A	ISSUED FOR REVIEW	17-FEB-23	BS	SB	

REVISIONS

AWC
9087A 198 Street Langley, BC Canada V1M 3B1
Phone : 604-638-0760 Fax: 604-638-0795
www.awcsolutions.ca

THIS DRAWING IS THE PROPERTY OF AWC AND CONTAINS PROPRIETARY AND CONFIDENTIAL INFORMATION WHICH MUST NOT BE DUPLICATED, USED OR DISCLOSED OTHER THAN EXPRESSLY AUTHORIZED BY AWC.

CLIENT	CITY & BUROUGH OF WRANGELL
PROJECT	WRANGELL WTP
TITLE	HYDRAULIC ELEVATIONS SKETCH
SCALE	NTS
PROJECTION	
DEFAULT UNITS	
SHEET SIZE	17 x 11
SHEET	1 OF 1
DRAWING NO.	17805-PR-SKT-001
REV	A

FILE: \\srv-fs01\shared\Shared\Customers\CRW Engineering\17805 Wrangell AK\5 Engineering\5.10 Process\5.10.H Diagrams & Dwgs (2D)

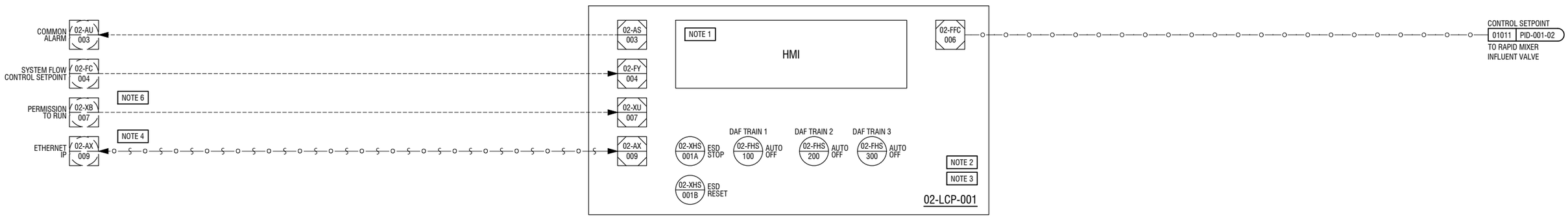

NOTES:
1. HMI SCREEN TO BE 15"
2. NOT ALL CONTROLS AND SWITCHES ARE SHOWN ON THIS PAGE, REFER TO ASSOCIATED P&IDS
3. 02-LCP-001 TO BE MOUNTED AND PRE-WIRED ON DAF 1 TRAIN. SOME INTERCONNECTING WIRING AND TERMINATION TO BE COMPLETED ON-SITE, BY OTHERS
4. REFER TO SERIAL INTERFACE LIST
5. ALL EQUIPMENT IN SOLID LINE TYPE CONNECTED TO DASHED LINE TYPE IS SUPPLIED BY AWC, SHIPPED LOOSE FOR INSTALLATION BY OTHERS
6. PERMISSION TO RUN SIGNAL FROM CUSTOMER CONTROL SYSTEM CAN BE REMOVED BY CLEARWELL HIGH LEVEL AND SHUTDOWN REQUEST

ENGINEER'S SEAL

PRELIMINARY NOT FOR CONSTRUCTION

THE INFORMATION ON THIS DRAWING IS INTENDED FOR CONCEPTUAL DEVELOPMENT, PRELIMINARY DESIGN, OR FOR GUIDANCE ONLY. THIS DOCUMENT SHOULD NOT BE CONSIDERED A FINALIZED PROFESSIONAL WORK PRODUCT.

REV	DESCRIPTION	DATE	DFT	CHK	APP
C	ISSUED FOR DESIGN	23-FEB-23	SBW	SB	AS
B	ISSUED FOR REVIEW	21-DEC-22	SBW	SB	AS
A	ISSUED FOR INTERNAL REVIEW	16-DEC-22	SBW	SB	AS

REVISIONS

9087A 198 Street Langley, BC Canada V1M 3B1
Phone : 604-936-4217
www.awcsolutions.com

THIS DRAWING IS THE PROPERTY OF AWC AND CONTAINS PROPRIETARY AND CONFIDENTIAL INFORMATION WHICH MUST NOT BE DUPLICATED, USED OR DISCLOSED OTHER THAN EXPRESSLY AUTHORIZED BY AWC.

CLIENT: CITY & BOROUGH OF WRANGELL

PROJECT: WRANGELL WTP

TITLE: PIPING & INSTRUMENTATION DIAGRAM

SCALE	PROJECTION	DEFAULT UNITS	SHEET SIZE	SHEET
NTS		in	17 x 11	1 OF 2

DRAWING NO. **17805-PR-PID-001** REV **C**

FILE: M:\SHARED\CUSTOMERS\CRW ENGINEERING\17805 WRANGELL AK\5 ENGINEERING\5.10 PROCESS\5.10.G P&IDS\5.10.G.1 P&IDS

01-TK-020	01-MX-021	01-MX-022	01-TK-023
RAPID MIXER TANK MANUFACTURER: AWC VOLUME: 800 USGAL SIZE: 7' 3" L x 6' W x 6' H MATERIAL: PLATE, ALUMINUM 5086-H116 MEMBERS, ALUMINUM 6061-T6	RAPID MIXER 1 MANUFACTURER: AFX MODEL: AMX150 RATING: 2 HP POWER: 480V/3Ph/60Hz G-VALUE: 800 S-1	RAPID MIXER 2 MANUFACTURER: AFX MODEL: AMX150 RATING: 2 HP POWER: 480V/3Ph/60Hz G-VALUE: 800 S-1	FLOW DISTRIBUTOR TANK MANUFACTURER: AWC VOLUME: 750 USGAL SIZE: 4' 3" L x 6' W x 6' H MATERIAL: PLATE, ALUMINUM 5086-H116 MEMBERS, ALUMINUM 6061-T6

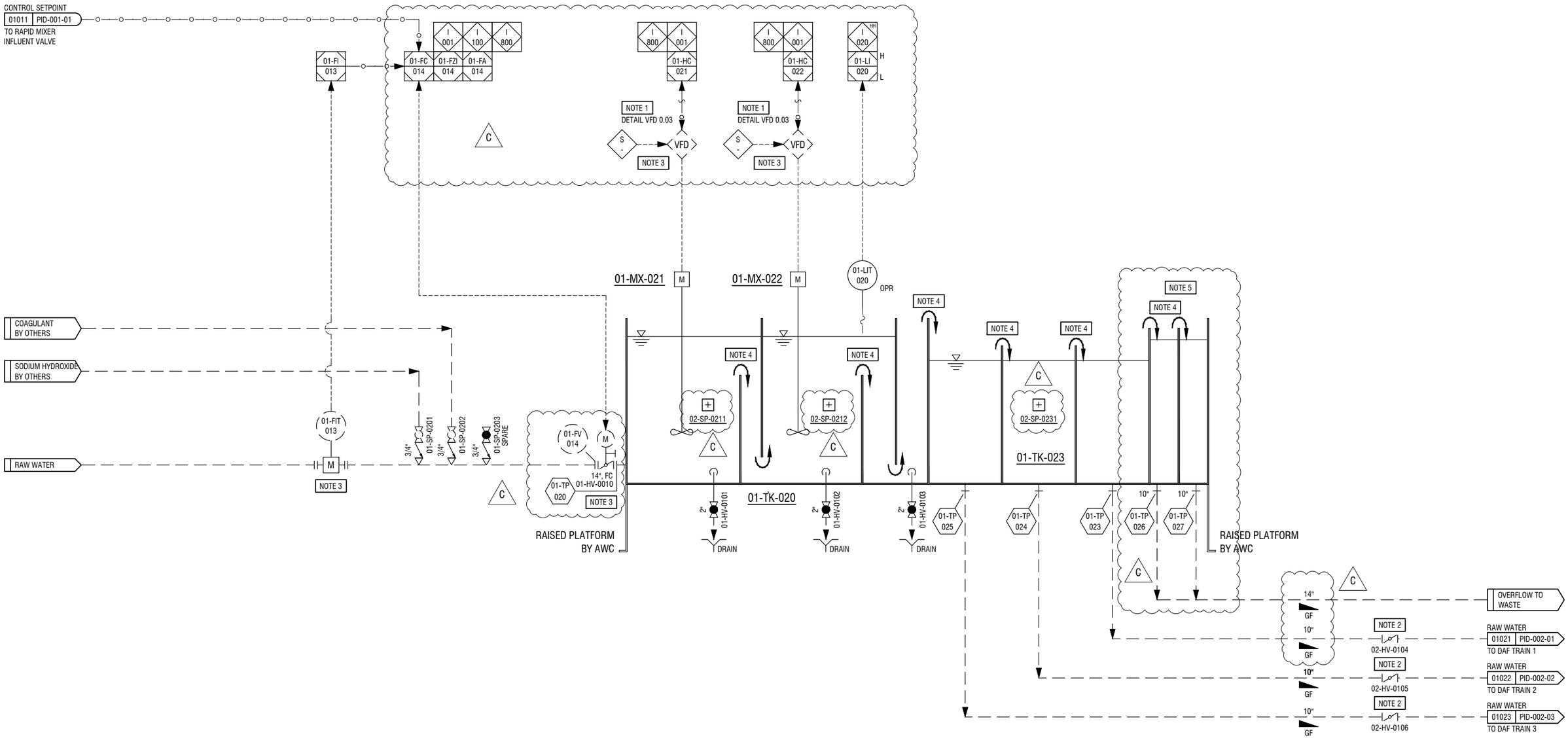

NOTES:
1. HOA SWITCH LOCATED IN THE FIELD NEAR THE MOTOR
2. SUPPLIED BY OTHERS
3. SUPPLIED, WIRED AND INSTALLED BY OTHERS. CONTROLLED BY AWC PANEL 02-LCP-001, POWERED BY OTHERS
4. ADJUSTABLE WEIR PLATES FOR BOTH OVERFLOW CHAMBERS
5. TWO OVERFLOW TROUGHS ARE ALONG THE LENGTH OF THE RAPID MIXER TANK ON BOTH SIDES
6. ALL EQUIPMENT IN SOLID LINE TYPE CONNECTED TO DASHED LINE TYPE IS SUPPLIED BY AWC, SHIPPED LOOSE FOR INSTALLATION BY OTHERS

ENGINEER'S SEAL

PRELIMINARY
NOT FOR CONSTRUCTION

THE INFORMATION ON THIS DRAWING IS INTENDED FOR CONCEPTUAL DEVELOPMENT, PRELIMINARY DESIGN, OR FOR GUIDANCE ONLY. THIS DOCUMENT SHOULD NOT BE CONSIDERED A FINALIZED PROFESSIONAL WORK PRODUCT.

REV	DESCRIPTION	DATE	DFT	CHK	APP
C	ISSUED FOR DESIGN	23-FEB-23	SBW	SB	AS
B	ISSUED FOR REVIEW	21-DEC-22	SBW	SB	AS
A	ISSUED FOR INTERNAL REVIEW	16-DEC-22	SBW	SB	AS

REVISIONS

9087A 198 Street Langley, BC Canada V1M 3B1
Phone : 604-936-4217
www.awcsolutions.com

THIS DRAWING IS THE PROPERTY OF AWC AND CONTAINS PROPRIETARY AND CONFIDENTIAL INFORMATION WHICH MUST NOT BE DUPLICATED, USED OR DISCLOSED OTHER THAN EXPRESSLY AUTHORIZED BY AWC.

CLIENT: CITY & BOROUGH OF WRANGELL

PROJECT: WRANGELL WTP

TITLE: PIPING & INSTRUMENTATION DIAGRAM

SCALE	PROJECTION	DEFAULT UNITS	SHEET SIZE	SHEET
NTS		in	17 x 11	2 OF 2

DRAWING NO. **17805-PR-PID-001** REV **C**

02-TK-102

STAGE 1 FLOCCULATION TANK
MANUFACTURER: AWC
VOLUME: 6680 USGAL
SIZE: 8' L x 10' W x 12' H
MATERIAL:
PLATE, ALUMINUM 5086-H116
MEMBERS, ALUMINUM 6061-T6

02-TK-104

STAGE 2 FLOCCULATION TANK
MANUFACTURER: AWC
VOLUME: 6680 USGAL
SIZE: 8' L x 10' W x 12' H
MATERIAL:
PLATE, ALUMINUM 5086-H116
MEMBERS, ALUMINUM 6061-T6

02-MX-103

STAGE 1 FLOCCULATION MIXER
MANUFACTURER: AFX
MODEL: AMX37
RATING: 1/2 HP
POWER: 480V/3Ph/60Hz
G-VALUE: 100 S-1

02-MX-105

STAGE 2 FLOCCULATION MIXER
MANUFACTURER: AFX
MODEL: AMX18
RATING: 1/4 HP
POWER: 480V/3Ph/60Hz
G-VALUE: 65 S-1

02-TK-110

CLARIFIER TANK
MANUFACTURER: AWC
VOLUME: 14,200 USGAL
SIZE: 17' L x 10' W x 12' H
MATERIAL:
PLATE, ALUMINUM 5086-H116
MEMBERS, ALUMINUM 6061-T6

02-SKM-111

SKIMMER DRIVE
MANUFACTURER: SEW-EURODRIVE
MODEL: KA47/T R37 DR DR2S63MS4/R
RATING: 0.25 HP
POWER: 480V/3Ph/60Hz

C

02-TK-119

EFFLUENT CHAMBER
MANUFACTURER: AWC
VOLUME: 3340 USGAL
SIZE: 4' L x 10' W x 12' H
MATERIAL:
PLATE, ALUMINUM 5086-H116
MEMBERS, ALUMINUM 6061-T6

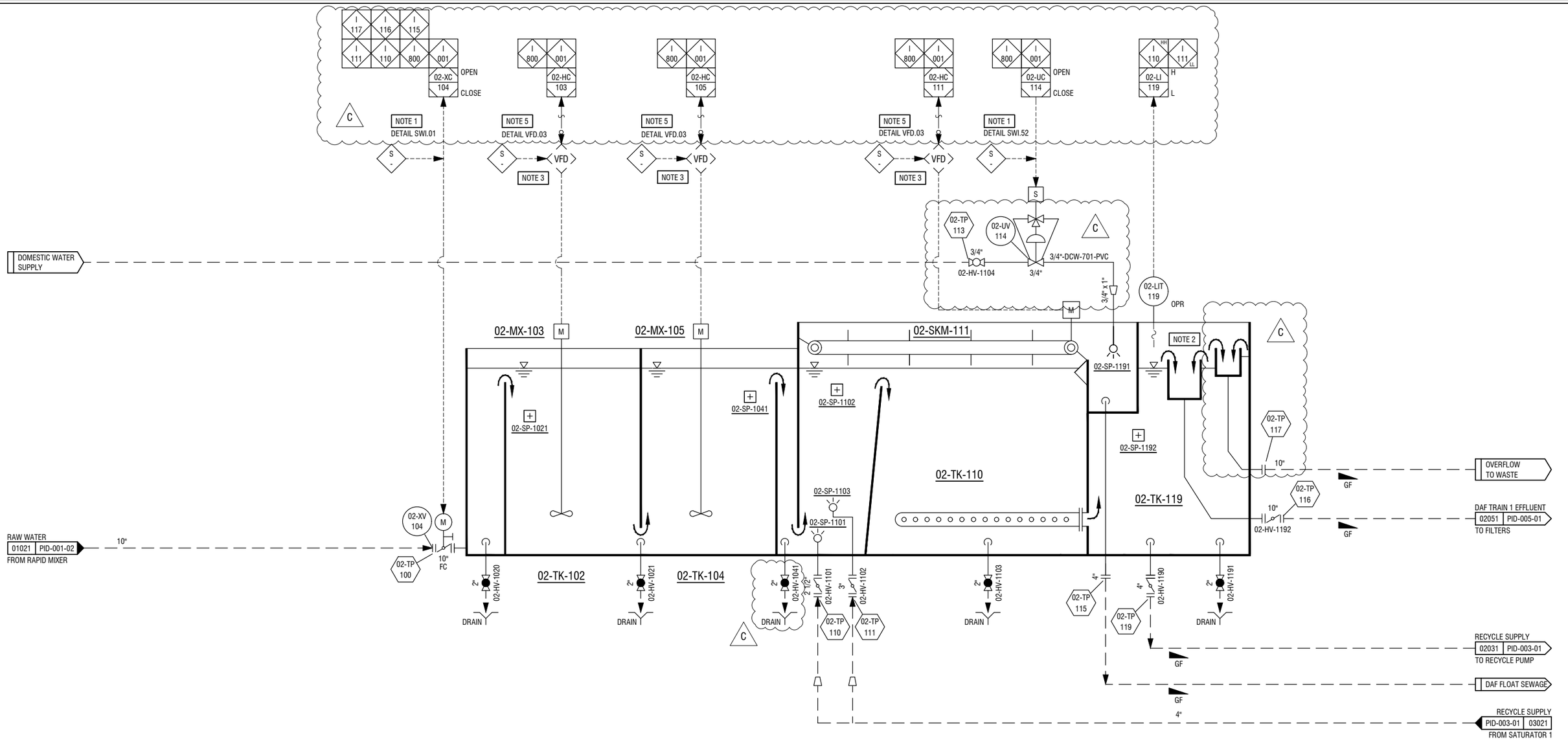

DAF PACKAGE TRAIN 1

NOTES:
1. HOA LOCATED ON 02-LCP-001
2. ADJUSTABLE WEIR PLATE
3. SUPPLIED, WIRED AND INSTALLED BY OTHERS. CONTROLLED BY AWC PANEL 02-LCP-001, POWERED BY OTHERS
4. DRAINS ARE EQUIPPED WITH STREET ELBOW INSIDE TANK
5. HOA SWITCH LOCATED IN THE FIELD NEAR THE MOTOR

C

ENGINEER'S SEAL

PRELIMINARY
NOT FOR CONSTRUCTION

THE INFORMATION ON THIS DRAWING IS INTENDED FOR CONCEPTUAL DEVELOPMENT, PRELIMINARY DESIGN, OR FOR GUIDANCE ONLY. THIS DOCUMENT SHOULD NOT BE CONSIDERED A FINALIZED PROFESSIONAL WORK PRODUCT.

REV	DESCRIPTION	DATE	DFT	CHK	APP
C	ISSUED FOR DESIGN	23-FEB-23	SBW	SB	AS
B	ISSUED FOR REVIEW	21-DEC-22	SBW	SB	AS
A	ISSUED FOR INTERNAL REVIEW	16-DEC-22	SBW	SB	AS

REVISIONS

AWC
9087A 198 Street Langley, BC Canada V1M 3B1
Phone : 604-936-4217
www.awcsolutions.com

THIS DRAWING IS THE PROPERTY OF AWC AND CONTAINS PROPRIETARY AND CONFIDENTIAL INFORMATION WHICH MUST NOT BE DUPLICATED, USED OR DISCLOSED OTHER THAN EXPRESSLY AUTHORIZED BY AWC.

CLIENT: CITY & BOROUGH OF WRANGELL
PROJECT: WRANGELL WTP
TITLE: PIPING & INSTRUMENTATION DIAGRAM

SCALE	PROJECTION	DEFAULT UNITS	SHEET SIZE	SHEET
NTS		in	17 x 11	1 OF 3

DRAWING NO. 17805-PR-PID-002
REV C

FILE: M:\SHARED\CUSTOMERS\CRW ENGINEERING\17805 WRANGELL AK\5 ENGINEERING\5.10 PROCESS\5.10.G P&IDS\5.10.G.1 P&IDS

02-TK-202

STAGE 1 FLOCCULATION TANK
MANUFACTURER: AWC
VOLUME: 6680 USGAL
SIZE: 8' L x 10' W x 12' H
MATERIAL:
PLATE, ALUMINUM 5086-H116
MEMBERS, ALUMINUM 6061-T6

02-TK-204

STAGE 2 FLOCCULATION TANK
MANUFACTURER: AWC
VOLUME: 6680 USGAL
SIZE: 8' L x 10' W x 12' H
MATERIAL:
PLATE, ALUMINUM 5086-H116
MEMBERS, ALUMINUM 6061-T6

02-MX-203

STAGE 1 FLOCCULATION MIXER
MANUFACTURER: AFX
MODEL: AMX37
RATING: 1/2 HP
POWER: 480V/3Ph/60Hz
G-VALUE: 100 S-1

02-MX-205

STAGE 2 FLOCCULATION MIXER
MANUFACTURER: AFX
MODEL: AMX18
RATING: 1/4 HP
POWER: 480V/3Ph/60Hz
G-VALUE: 65 S-1

02-TK-210

CLARIFIER TANK
MANUFACTURER: AWC
VOLUME: 14,200 USGAL
SIZE: 17' L x 10' W x 12' H
MATERIAL:
PLATE, ALUMINUM 5086-H116
MEMBERS, ALUMINUM 6061-T6

02-SKM-211

SKIMMER DRIVE
MANUFACTURER: SEW-EURODRIVE
MODEL: KA47/T R37 DR DR2S63MS4/R
RATING: 0.25 HP
POWER: 480V/3Ph/60Hz

C

02-TK-219

EFFLUENT CHAMBER
MANUFACTURER: AWC
VOLUME: 3340 USGAL
SIZE: 4' L x 10' W x 12' H
MATERIAL:
PLATE, ALUMINUM 5086-H116
MEMBERS, ALUMINUM 6061-T6

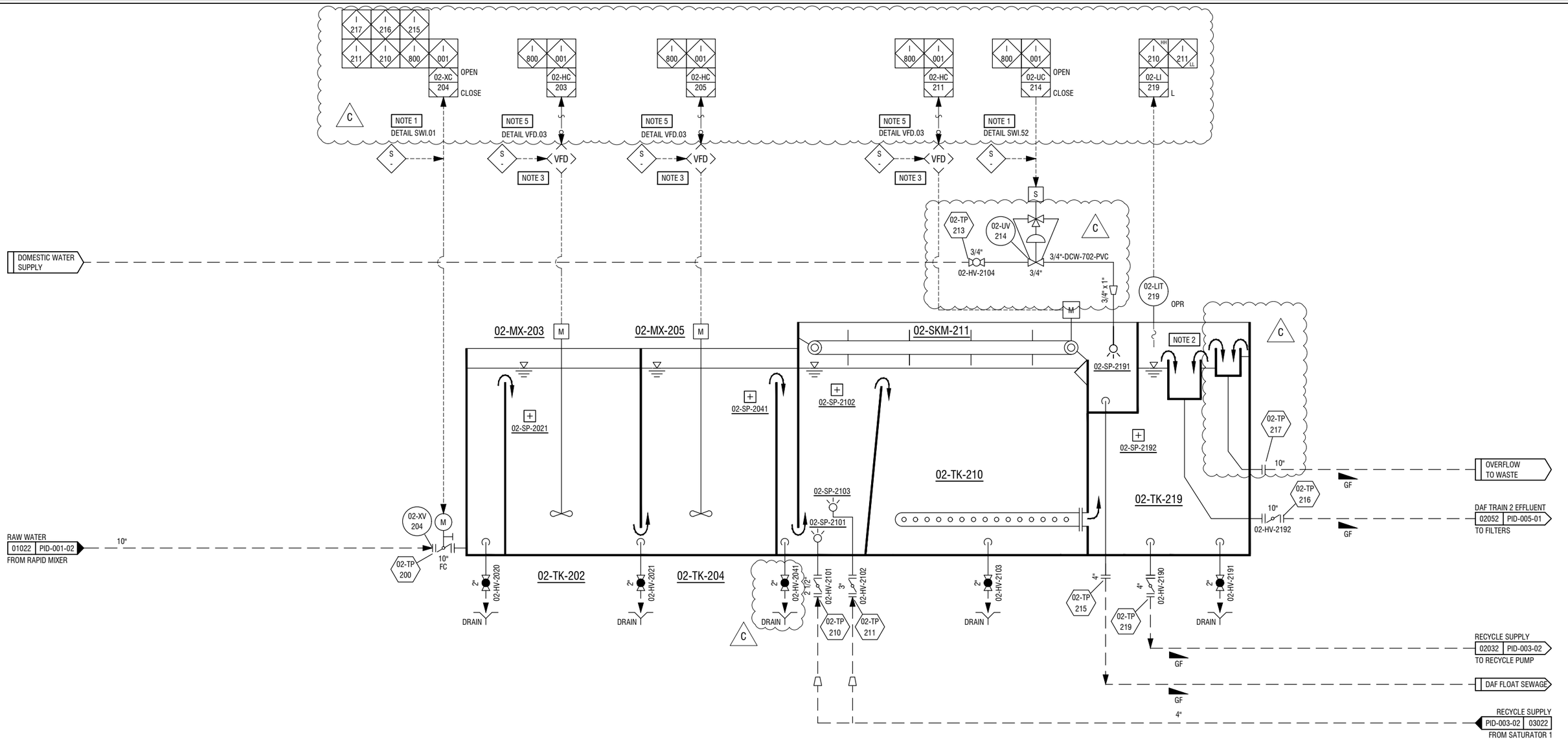

DAF PACKAGE TRAIN 2

NOTES:

1. HOA LOCATED ON LCP-001
2. ADJUSTABLE WEIR PLATE
3. SUPPLIED, WIRED AND INSTALLED BY OTHERS. CONTROLLED BY AWC PANEL LCP-001, POWERED BY OTHERS
4. DRAINS ARE EQUIPPED WITH STREET ELBOW INSIDE TANK
5. HOA SWITCH LOCATED IN THE FIELD NEAR THE MOTOR

C

ENGINEER'S SEAL

PRELIMINARY
NOT FOR CONSTRUCTION

THE INFORMATION ON THIS DRAWING IS INTENDED FOR CONCEPTUAL DEVELOPMENT, PRELIMINARY DESIGN, OR FOR GUIDANCE ONLY. THIS DOCUMENT SHOULD NOT BE CONSIDERED A FINALIZED PROFESSIONAL WORK PRODUCT.

REV	DESCRIPTION	DATE	DFT	CHK	APP
C	ISSUED FOR DESIGN	23-FEB-23	SBW	SB	AS
B	ISSUED FOR REVIEW	21-DEC-22	SBW	SB	AS
A	ISSUED FOR INTERNAL REVIEW	16-DEC-22	SBW	SB	AS

REVISIONS

AWC
9087A 198 Street Langley, BC Canada V1M 3B1
Phone : 604-936-4217
www.awcsolutions.com

THIS DRAWING IS THE PROPERTY OF AWC AND CONTAINS PROPRIETARY AND CONFIDENTIAL INFORMATION WHICH MUST NOT BE DUPLICATED, USED OR DISCLOSED OTHER THAN EXPRESSLY AUTHORIZED BY AWC.

CLIENT: CITY & BOROUGH OF WRANGELL
PROJECT: WRANGELL WTP
TITLE: PIPING & INSTRUMENTATION DIAGRAM

SCALE	PROJECTION	DEFAULT UNITS	SHEET SIZE	SHEET
NTS		in	17 x 11	2 OF 3

DRAWING NO. 17805-PR-PID-002
REV C

FILE: M:\SHARED\CUSTOMERS\CRW ENGINEERING\17805 WRANGELL AK\5 ENGINEERING\5.10 PROCESS\5.10.G P&IDS\5.10.G.1 P&IDS

02-TK-302

STAGE 1 FLOCCULATION TANK
MANUFACTURER: AWC
VOLUME: 6680 USGAL
SIZE: 8' L x 10' W x 12' H
MATERIAL:
PLATE, ALUMINUM 5086-H116
MEMBERS, ALUMINUM 6061-T6

02-TK-304

STAGE 2 FLOCCULATION TANK
MANUFACTURER: AWC
VOLUME: 6680 USGAL
SIZE: 8' L x 10' W x 12' H
MATERIAL:
PLATE, ALUMINUM 5086-H116
MEMBERS, ALUMINUM 6061-T6

02-MX-303

STAGE 1 FLOCCULATION MIXER
MANUFACTURER: AFX
MODEL: AMX37
RATING: 1/2 HP
POWER: 480V/3Ph/60Hz
G-VALUE: 100 S-1

02-MX-305

STAGE 2 FLOCCULATION MIXER
MANUFACTURER: AFX
MODEL: AMX18
RATING: 1/4 HP
POWER: 480V/3Ph/60Hz
G-VALUE: 65 S-1

02-TK-310

CLARIFIER TANK
MANUFACTURER: AWC
VOLUME: 14,200 USGAL
SIZE: 17' L x 10' W x 12' H
MATERIAL:
PLATE, ALUMINUM 5086-H116
MEMBERS, ALUMINUM 6061-T6

02-SKM-311

SKIMMER DRIVE
MANUFACTURER: SEW-EURODRIVE
MODEL: KA47/T R37 DR DR2S63MS4/R
RATING: 0.25 HP
POWER: 480V/3Ph/60Hz

C

02-TK-319

EFFLUENT CHAMBER
MANUFACTURER: AWC
VOLUME: 3340 USGAL
SIZE: 4' L x 10' W x 12' H
MATERIAL:
PLATE, ALUMINUM 5086-H116
MEMBERS, ALUMINUM 6061-T6

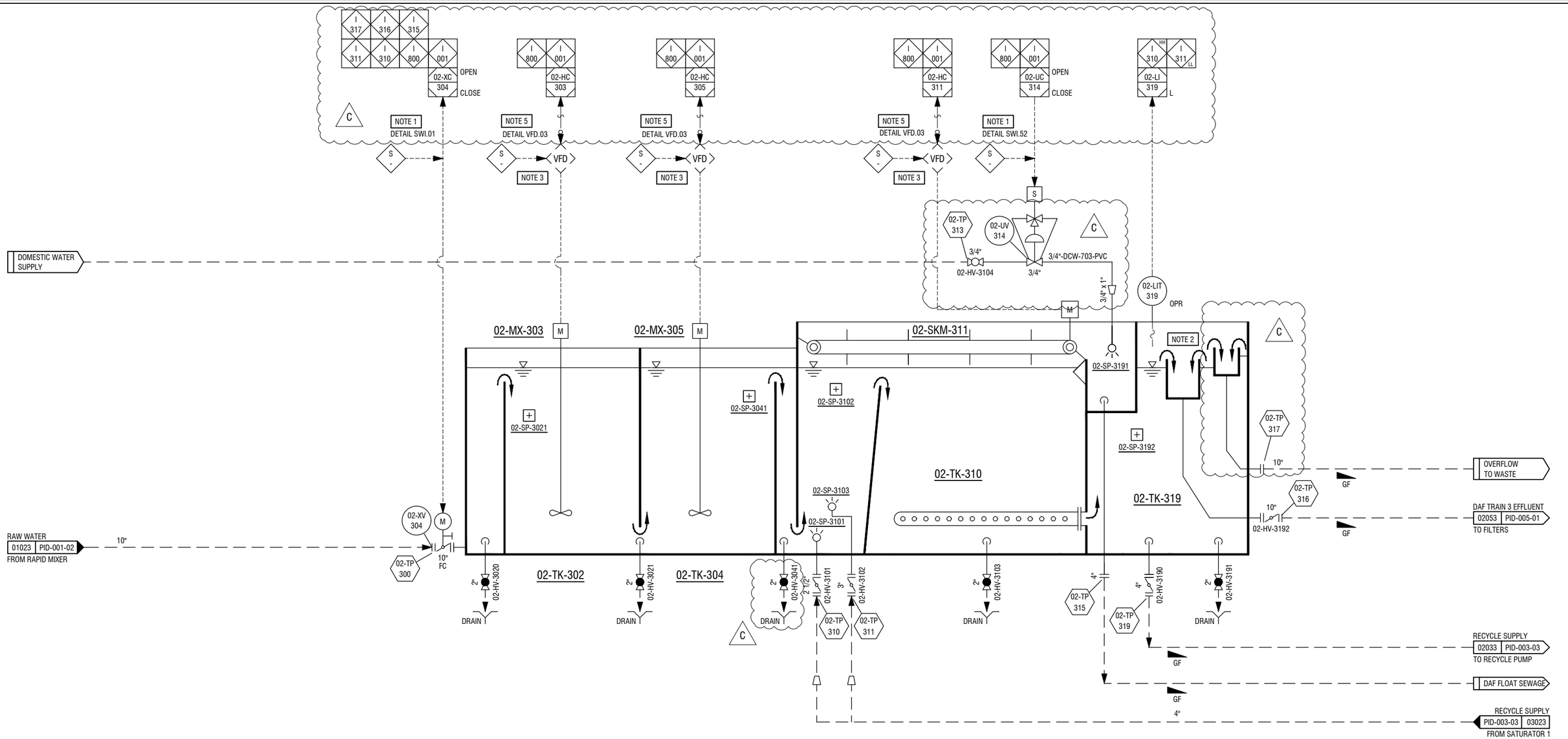

DAF PACKAGE TRAIN 3

NOTES:
1. HOA LOCATED ON 02-LCP-001
2. ADJUSTABLE WEIR PLATE
3. SUPPLIED, WIRED AND INSTALLED BY OTHERS. CONTROLLED BY AWC PANEL 02-LCP-001, POWERED BY OTHERS
4. DRAINS ARE EQUIPPED WITH STREET ELBOW INSIDE TANK
5. HOA SWITCH LOCATED IN THE FIELD NEAR THE MOTOR

C

ENGINEER'S SEAL

PRELIMINARY
NOT FOR CONSTRUCTION

THE INFORMATION ON THIS DRAWING IS INTENDED FOR CONCEPTUAL DEVELOPMENT, PRELIMINARY DESIGN, OR FOR GUIDANCE ONLY. THIS DOCUMENT SHOULD NOT BE CONSIDERED A FINALIZED PROFESSIONAL WORK PRODUCT.

REV	DESCRIPTION	DATE	DFT	CHK	APP
C	ISSUED FOR DESIGN	23-FEB-23	SBW	SB	AS
B	ISSUED FOR REVIEW	21-DEC-22	SBW	SB	AS
A	ISSUED FOR INTERNAL REVIEW	16-DEC-22	SBW	SB	AS

REVISIONS

AWC
9087A 198 Street Langley, BC Canada V1M 3B1
Phone : 604-936-4217
www.awcsolutions.com

THIS DRAWING IS THE PROPERTY OF AWC AND CONTAINS PROPRIETARY AND CONFIDENTIAL INFORMATION WHICH MUST NOT BE DUPLICATED, USED OR DISCLOSED OTHER THAN EXPRESSLY AUTHORIZED BY AWC.

CLIENT: CITY & BOROUGH OF WRANGELL
PROJECT: WRANGELL WTP
TITLE: PIPING & INSTRUMENTATION DIAGRAM

SCALE	PROJECTION	DEFAULT UNITS	SHEET SIZE	SHEET
NTS		in	17 x 11	3 OF 3

DRAWING NO. **17805-PR-PID-002** REV **C**

FILE: M:\SHARED\CUSTOMERS\CRW ENGINEERING\17805 WRANGELL AK\5 ENGINEERING\5.10 PROCESS\5.10.G P&IDS\5.10.G.1 P&IDS

02-P-120

RECYCLE PUMP
MANUFACTURER: GRUNDFOS
MODEL: CRI 15-4
CAPACITY: 80 gpm @ 200 FT OR 85 PSI
RATING: 7.5 HP
POWER: 460V/3Ph/60Hz

02-SAT-125

C

SATURATOR
MANUFACTURER: KOOTNEY FABRICATION
MODEL: 24" DIA x 90° FoF/SEAM CS (TBC)
MAWP: 150 PSIG @ 140 oF
MDMT: -20 oF @ 150 PSIG
MATERIAL: EPOXY COATED STEEL

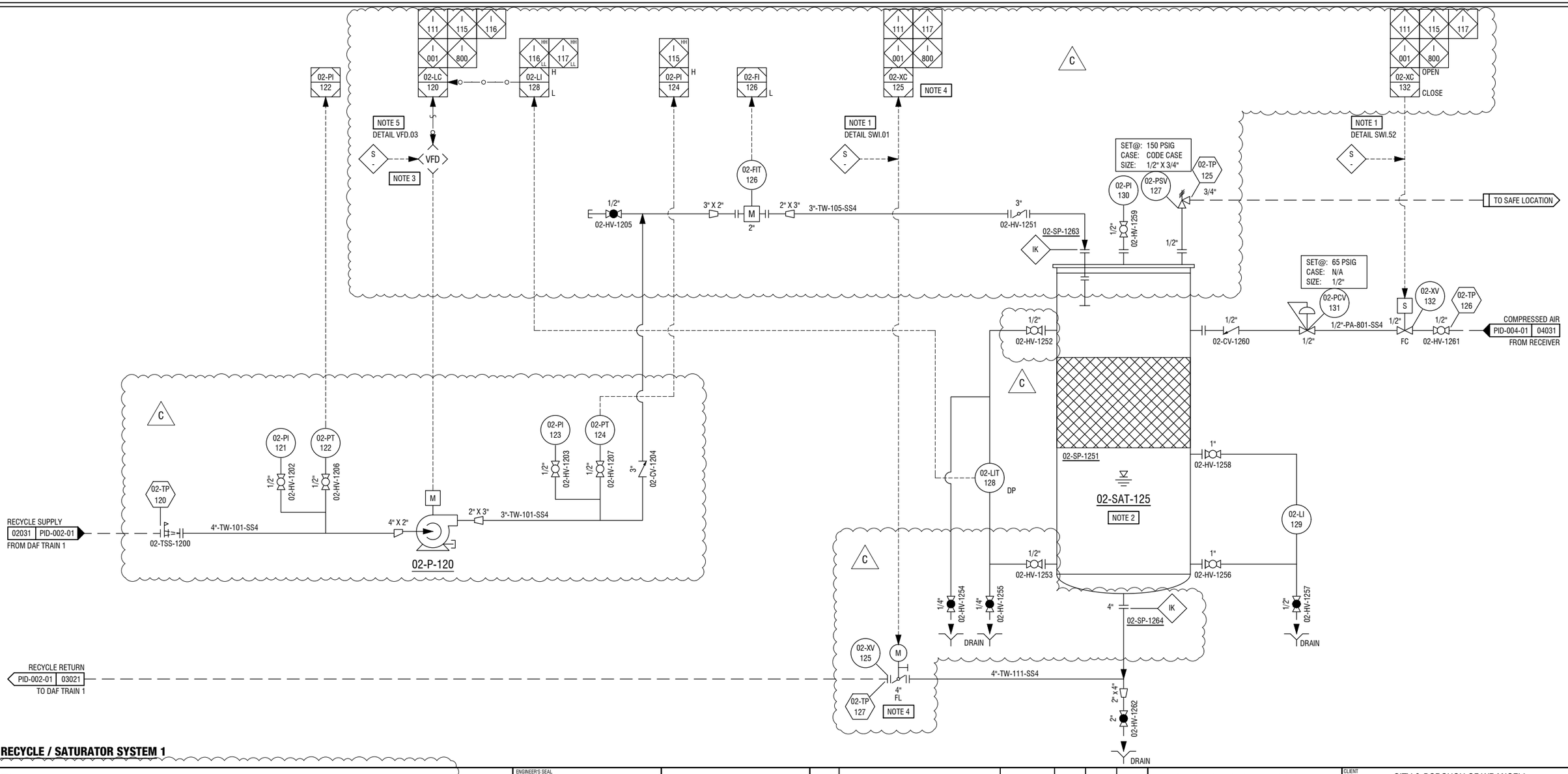

RECYCLE / SATURATOR SYSTEM 1

NOTES:
1. HOA SWITCH LOCATED ON 02-LCP-001
2. ALL PAINTED SATURATOR VESSEL CONNECTIONS UNDER 2" IN SIZE ARE MINIMUM FLANGED 2" CONNECTIONS WITH REDUCING BLIND FLANGES
3. SUPPLIED, WIRED AND INSTALLED BY OTHERS. CONTROLLED BY AWC PANEL 02-LCP-001, POWERED BY OTHERS
4. MODULATING VALVE USED FOR SLOW OPEN AND LEVEL RECOVERY SEQUENCE
5. HOA SWITCH LOCATED IN THE FIELD NEAR THE MOTOR

C

ENGINEER'S SEAL

PRELIMINARY
NOT FOR CONSTRUCTION
THE INFORMATION ON THIS DRAWING IS INTENDED FOR CONCEPTUAL DEVELOPMENT, PRELIMINARY DESIGN, OR FOR GUIDANCE ONLY. THIS DOCUMENT SHOULD NOT BE CONSIDERED A FINALIZED PROFESSIONAL WORK PRODUCT.

REV	DESCRIPTION	DATE	DFT	CHK	APP
C	ISSUED FOR DESIGN	23-FEB-23	SBW	SB	AS
B	ISSUED FOR REVIEW	21-DEC-22	SBW	SB	AS
A	ISSUED FOR INTERNAL REVIEW	16-DEC-22	SBW	SB	AS

REVISIONS

AWC
9087A 198 Street Langley, BC Canada V1M 3B1
Phone : 604-936-4217
www.awcsolutions.com

THIS DRAWING IS THE PROPERTY OF AWC AND CONTAINS PROPRIETARY AND CONFIDENTIAL INFORMATION WHICH MUST NOT BE DUPLICATED, USED OR DISCLOSED OTHER THAN EXPRESSLY AUTHORIZED BY AWC.

CLIENT: CITY & BOROUGH OF WRANGELL
PROJECT: WRANGELL WTP
TITLE: PIPING & PIPING DIAGRAM

SCALE	PROJECTION	DEFAULT UNITS	SHEET SIZE	SHEET
NTS		in	17 x 11	1 OF 3

DRAWING NO. 17805-PR-PID-003
REV C

FILE: M:\SHARED\CUSTOMERS\CRW ENGINEERING\17805 WRANGELL AK\5 ENGINEERING\5.10 PROCESS\5.10.G P&IDS\5.10.G.1 P&IDS

02-P-220

RECYCLE PUMP
MANUFACTURER: GRUNDFOS
MODEL: CRI 15-4
CAPACITY: 80 gpm @ 200 FT OR 85 PSI
RATING: 7.5 HP
POWER: 460V/3Ph/60Hz

C

02-SAT-225

SATURATOR
MANUFACTURER: KOOTNEY FABRICATION
MODEL: 24" DIA x 90° FoF/SEAM CS (TBC)
MAWP: 150 PSIG @ 140 oF
MDMT: -20 oF @ 150 PSIG
MATERIAL: EPOXY COATED STEEL

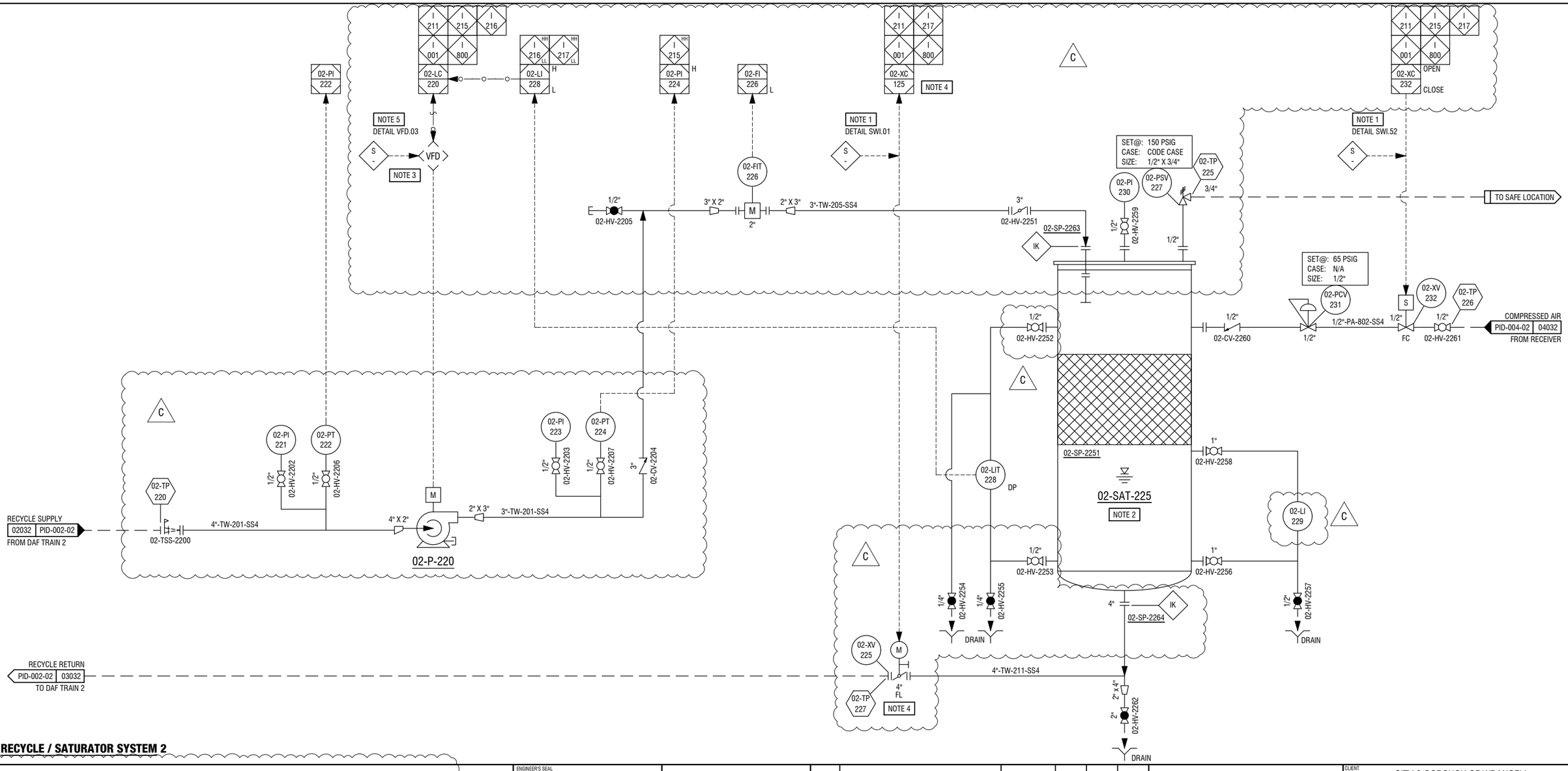

RECYCLE / SATURATOR SYSTEM 2

NOTES:
1. HOA SWITCH LOCATED ON 02-LCP-001
2. ALL PAINTED SATURATOR VESSEL CONNECTIONS UNDER 2" IN SIZE ARE MINIMUM FLANGED 2" CONNECTIONS WITH REDUCING BLIND FLANGES
3. SUPPLIED, WIRED AND INSTALLED BY OTHERS. CONTROLLED BY AWC PANEL 02-LCP-001, POWERED BY OTHERS
4. MODULATING VALVE USED FOR SLOW OPEN AND LEVEL RECOVERY SEQUENCE
5. HOA SWITCH LOCATED IN THE FIELD NEAR THE MOTOR

C

ENGINEER'S SEAL

PRELIMINARY
NOT FOR CONSTRUCTION

THE INFORMATION ON THIS DRAWING IS INTENDED FOR CONCEPTUAL DEVELOPMENT, PRELIMINARY DESIGN, OR FOR GUIDANCE ONLY. THIS DOCUMENT SHOULD NOT BE CONSIDERED A FINALIZED PROFESSIONAL WORK PRODUCT.

REV	DESCRIPTION	DATE	DFT	CHK	APP
C	ISSUED FOR DESIGN	23-FEB-23	SBW	SB	AS
B	ISSUED FOR REVIEW	21-DEC-22	SBW	SB	AS
A	ISSUED FOR INTERNAL REVIEW	16-DEC-22	SBW	SB	AS

REVISIONS

AWC
9087A 198 Street Langley, BC Canada V1M 3B1
Phone : 604-936-4217
www.awcsolutions.com

THIS DRAWING IS THE PROPERTY OF AWC AND CONTAINS PROPRIETARY AND CONFIDENTIAL INFORMATION WHICH MUST NOT BE DUPLICATED, USED OR DISCLOSED OTHER THAN EXPRESSLY AUTHORIZED BY AWC.

CLIENT: CITY & BOROUGH OF WRANGELL
PROJECT: WRANGELL WTP
TITLE: PIPING & INSTRUMENTATION DIAGRAM
SCALE: NTS | PROJECTION | DEFAULT UNITS: in | SHEET SIZE: 17 x 11 | SHEET: 2 OF 3
DRAWING NO.: 17805-PR-PID-003 | REV: C

FILE: M:\SHARED\CUSTOMERS\CRW ENGINEERING\17805 WRANGELL AK\5 ENGINEERING\5.10 PROCESS\5.10.G P&IDS\5.10.G.1 P&IDS

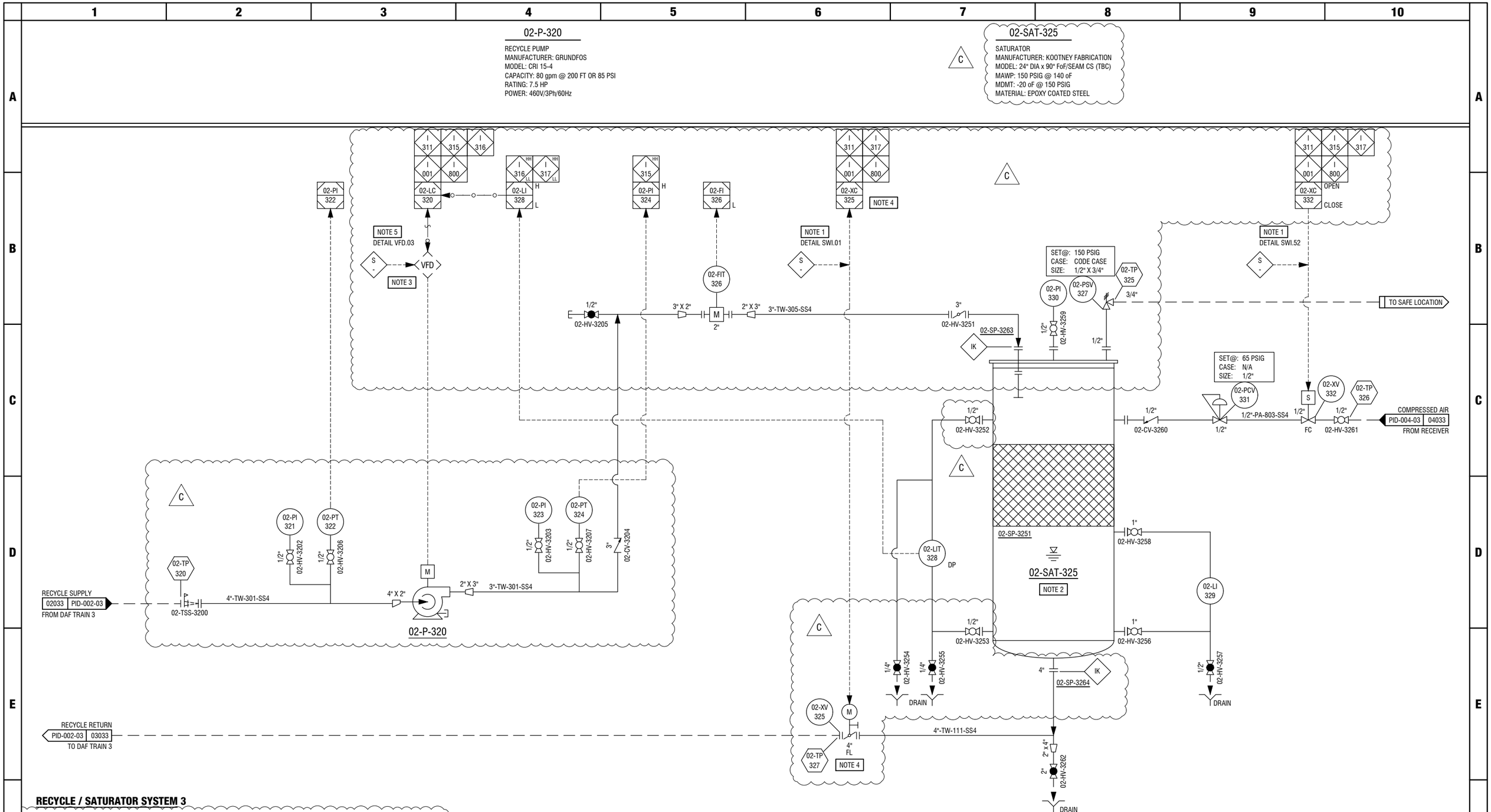

RECYCLE / SATURATOR SYSTEM 3

NOTES:
1. HOA SWITCH LOCATED ON 02-LCP-001
2. ALL PAINTED SATURATOR VESSEL CONNECTIONS UNDER 2" IN SIZE ARE MINIMUM FLANGED 2" CONNECTIONS WITH REDUCING BLIND FLANGES
3. SUPPLIED, WIRED AND INSTALLED BY OTHERS. CONTROLLED BY AWC PANEL 02-LCP-001, POWERED BY OTHERS
4. MODULATING VALVE USED FOR SLOW OPEN AND LEVEL RECOVERY SEQUENCE
5. HOA SWITCH LOCATED IN THE FIELD NEAR THE MOTOR

ENGINEER'S SEAL

PRELIMINARY
NOT FOR CONSTRUCTION

THE INFORMATION ON THIS DRAWING IS INTENDED FOR CONCEPTUAL DEVELOPMENT, PRELIMINARY DESIGN, OR FOR GUIDANCE ONLY. THIS DOCUMENT SHOULD NOT BE CONSIDERED A FINALIZED PROFESSIONAL WORK PRODUCT.

REV	DESCRIPTION	DATE	DFT	CHK	APP
C	ISSUED FOR DESIGN	23-FEB-23	SBW	SB	AS
B	ISSUED FOR REVIEW	21-DEC-22	SBW	SB	AS
A	ISSUED FOR INTERNAL REVIEW	16-DEC-22	SBW	SB	AS

REVISIONS

AWC
9087A 198 Street Langley, BC Canada V1M 3B1
Phone : 604-936-4217
www.awcsolutions.com

THIS DRAWING IS THE PROPERTY OF AWC AND CONTAINS PROPRIETARY AND CONFIDENTIAL INFORMATION WHICH MUST NOT BE DUPLICATED, USED OR DISCLOSED OTHER THAN EXPRESSLY AUTHORIZED BY AWC.

CLIENT: CITY & BOROUGH OF WRANGELL
PROJECT: WRANGELL WTP
TITLE: PIPING & INSTRUMENTATION DIAGRAM
SCALE: NTS | PROJECTION | DEFAULT UNITS: in | SHEET SIZE: 17 x 11 | SHEET: 3 OF 3
DRAWING NO.: 17805-PR-PID-003 | REV: C

FILE: M:\SHARED\CUSTOMERS\CRW ENGINEERING\17805 WRANGELL AK\5 ENGINEERING\5.10 PROCESS\5.10.G P&IDS\5.10.G.1 P&IDS

08-AC-810 / 820

AIR COMPRESSOR
MANUFACTURER: INGERSOLL RAND
MODEL: 2-2475E5
CAPACITY: 16.8 scfm @ 175 psi
RATING: 5 HP
POWER: 230V/3Ph/60Hz

08-REC-815

RECEIVER
MANUFACTURER: INGERSOLL RAND
MODEL: NOTE 2
VOLUME: 120 GAL
MATERIAL: CARBON STEEL

08-F-816

GENERAL PURPOSE AIR FILTER
MANUFACTURER: INGERSOLL RAND
MODEL: FA75IG
SIZE: 58 scfm
MAWP: 250 PSIG
FILTRATION SIZE: 1 um

08-F-817

HIGH EFFICIENCY COALESCING AIR FILTER
MANUFACTURER: INGERSOLL RAND
MODEL: FA75IH
CAPACITY: 58 scfm
MAWP: 250 PSIG
FILTRATION SIZE: 0.01 um

08-F-818

ACTIVATED CARBON AIR FILTER
MANUFACTURER: INGERSOLL RAND
MODEL: FA75IA
CAPACITY: 58 scfm
MAWP: 250 PSIG
OIL REMOVAL: 0.003 mg/m3

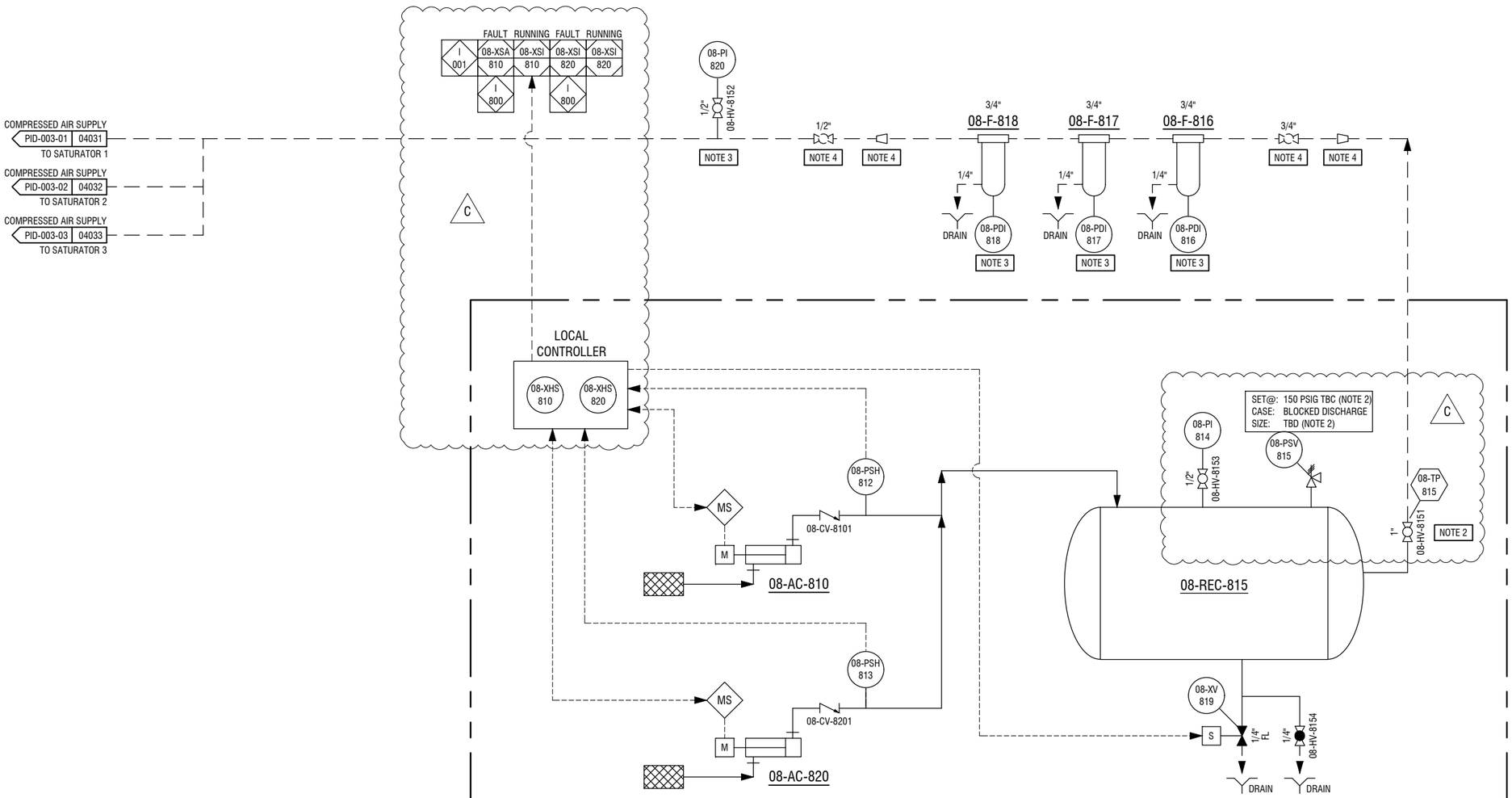

NOTES:

1. COMPRESSOR AND RECEIVER PACKAGE BY INGERSOLL RAND. EXACT CONFIGURATION TO BE CONFIRMED BY VENDOR.
2. TO BE CONFIRMED BY VENDOR.
3. SUPPLIED BY AWC, SHIPPED LOOSE FOR INSTALLATION BY OTHERS.
4. SUPPLIED AND INSTALLED BY OTHERS.

ENGINEER'S SEAL

PRELIMINARY
NOT FOR CONSTRUCTION

THE INFORMATION ON THIS DRAWING IS INTENDED FOR CONCEPTUAL DEVELOPMENT, PRELIMINARY DESIGN, OR FOR GUIDANCE ONLY. THIS DOCUMENT SHOULD NOT BE CONSIDERED A FINALIZED PROFESSIONAL WORK PRODUCT.

REV	DESCRIPTION	DATE	DFT	CHK	APP
C	ISSUED FOR DESIGN	23-FEB-23	SBW	SB	AS
B	ISSUED FOR REVIEW	21-DEC-22	SBW	SB	AS
A	ISSUED FOR INTERNAL REVIEW	16-DEC-22	SBW	SB	AS

REVISIONS

AWC
9087A 198 Street Langley, BC Canada V1M 3B1
Phone : 604-936-4217
www.awcsolutions.com

THIS DRAWING IS THE PROPERTY OF AWC AND CONTAINS PROPRIETARY AND CONFIDENTIAL INFORMATION WHICH MUST NOT BE DUPLICATED, USED OR DISCLOSED OTHER THAN EXPRESSLY AUTHORIZED BY AWC.

CLIENT: CITY & BOROUGH OF WRANGELL
PROJECT: WRANGELL WTP
TITLE: PIPING & INSTRUMENTATION DIAGRAM

SCALE	PROJECTION	DEFAULT UNITS	SHEET SIZE	SHEET
NTS		in	17 x 11	1 OF 1

DRAWING NO. 17805-PR-PID-004
REV C

FILE: M:\SHARED\CUSTOMERS\CRW ENGINEERING\17805 WRANGELL AK\5 ENGINEERING\5.10 PROCESS\5.10.G P&IDS\5.10.G.1 P&IDS

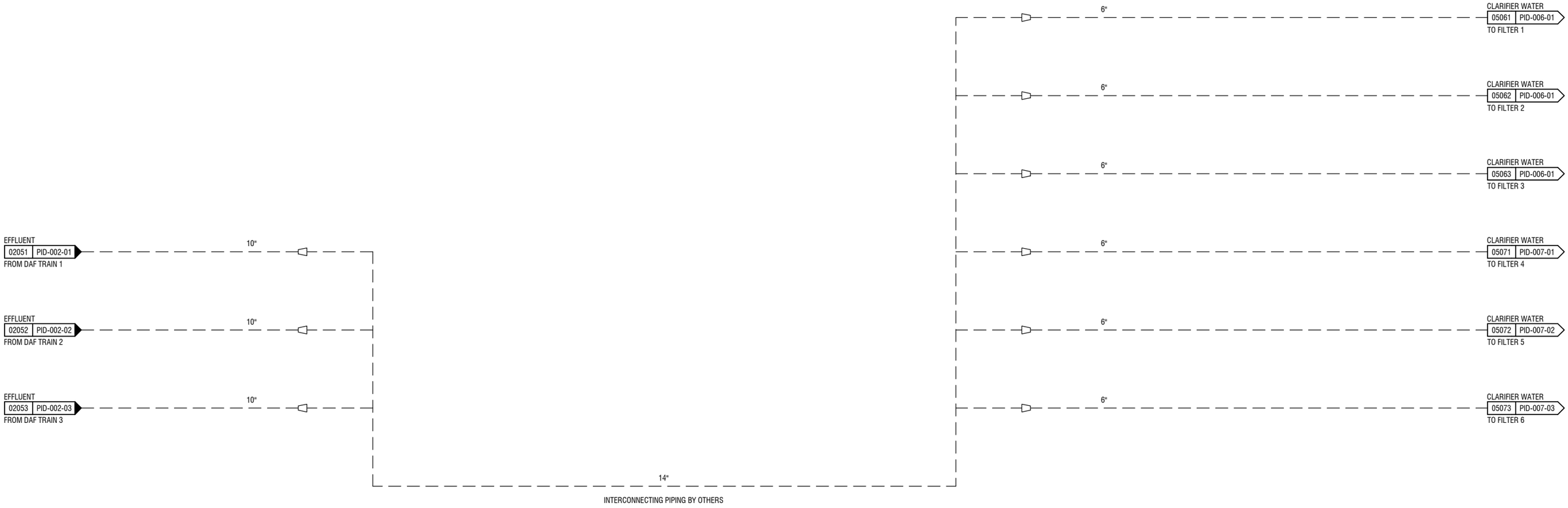

ENGINEER'S SEAL

PRELIMINARY
NOT FOR CONSTRUCTION

THE INFORMATION ON THIS DRAWING IS INTENDED FOR CONCEPTUAL DEVELOPMENT, PRELIMINARY DESIGN, OR FOR GUIDANCE ONLY. THIS DOCUMENT SHOULD NOT BE CONSIDERED A FINALIZED PROFESSIONAL WORK PRODUCT.

REV	DESCRIPTION	DATE	DFT	CHK	APP
C	ISSUED FOR DESIGN	23-FEB-23	SBW	SB	AS
B	ISSUED FOR REVIEW	21-DEC-22	SBW	SB	AS
A	ISSUED FOR INTERNAL REVIEW	16-DEC-22	SBW	SB	AS

REVISIONS

AWC
9087A 198 Street Langley, BC Canada V1M 3B1
Phone : 604-936-4217
www.awcsolutions.com

THIS DRAWING IS THE PROPERTY OF AWC AND CONTAINS PROPRIETARY AND CONFIDENTIAL INFORMATION WHICH MUST NOT BE DUPLICATED, USED OR DISCLOSED OTHER THAN EXPRESSLY AUTHORIZED BY AWC.

CLIENT: CITY & BOROUGH OF WRANGELL

PROJECT: WRANGELL WTP

TITLE: PIPING & INSTRUMENTATION DIAGRAM

SCALE	PROJECTION	DEFAULT UNITS	SHEET SIZE	SHEET
NTS		in	17 x 11	1 OF 1

DRAWING NO. **17805-PR-PID-005** REV **C**

FILE: M:\SHARED\CUSTOMERS\CRW ENGINEERING\17805 WRANGELL AK\5 ENGINEERING\5.10 PROCESS\5.10.G P&IDS\5.10.G.1 P&IDS

03-TK-140

FILTER TANK 1
MANUFACTURER: AWC
VOLUME: 8500 USGAL
SIZE: 10' L x 12' W x 10.5' H
MATERIAL:
PLATE, ALUMINUM 5086-H116
MEMBERS, ALUMINUM 6061-T6

03-TK-160

FILTER TANK 2
MANUFACTURER: AWC
VOLUME: 8500 USGAL
SIZE: 10' L x 12' W x 10.5' H
MATERIAL:
PLATE, ALUMINUM 5086-H116
MEMBERS, ALUMINUM 6061-T6

03-TK-180

FILTER TANK 3
MANUFACTURER: AWC
VOLUME: 8500 USGAL
SIZE: 10' L x 12' W x 10.5' H
MATERIAL:
PLATE, ALUMINUM 5086-H116
MEMBERS, ALUMINUM 6061-T6

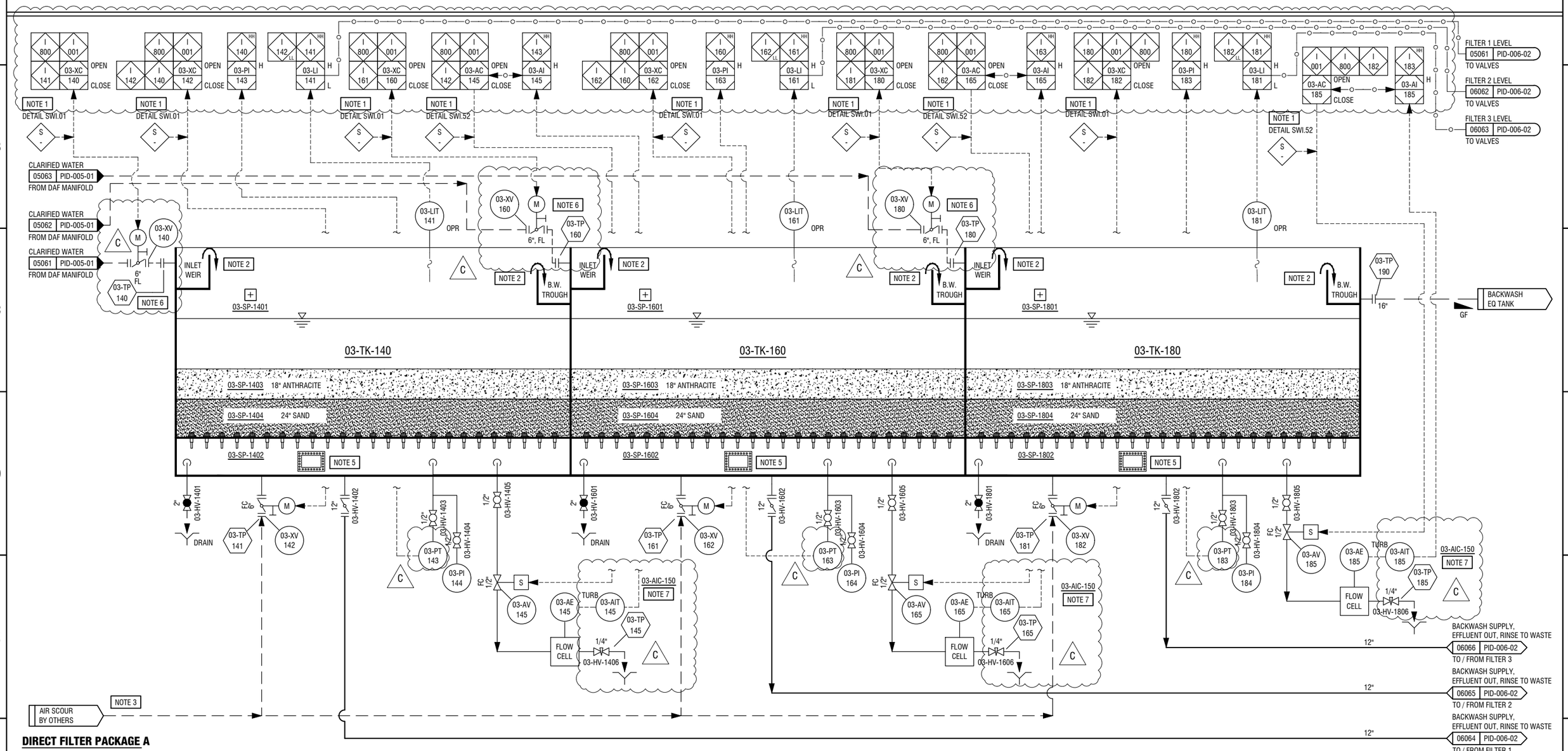

DIRECT FILTER PACKAGE A

NOTES:
1. HOA SWITCH LOCATED ON 03-RCP-101
2. ADJUSTABLE WEIR PLATE
3. AIR SCOUR PIPING FROM BLOWER TO THE TRAIN, MUST LOOP ABOVE THE HIGH WATER LEVEL IN THE FILTER TANK, ASSUMING DOWNSTREAM OF THE BLOWER PACKAGE THERE IS A CHECK VALVE
4. 03-RCP-101 TO BE PRE-WIRED AND MOUNTED DIRECT ON FILTER PACKAGE A. INTERCONNECTING WIRING AND TERMINATION TO BE DONE ON-SITE, BY OTHERS
5. ACCESS MANWAY; ALUMINUM PLATE COVER, BOLTED WITH GASKET TO THE TANK
6. WIRED BY AWC, SHIPPED LOOSE AND INSTALLED BY OTHERS
7. ONE COMMON TURBIDITY CONTROLLER FOR FILTER PACKAGE A

ENGINEER'S SEAL

PRELIMINARY NOT FOR CONSTRUCTION

THE INFORMATION ON THIS DRAWING IS INTENDED FOR CONCEPTUAL DEVELOPMENT, PRELIMINARY DESIGN, OR FOR GUIDANCE ONLY. THIS DOCUMENT SHOULD NOT BE CONSIDERED A FINALIZED PROFESSIONAL WORK PRODUCT.

REV	DESCRIPTION	DATE	DFT	CHK	APP
C	ISSUED FOR DESIGN	23-FEB-23	SBW	SB	AS
B	ISSUED FOR REVIEW	21-DEC-22	SBW	SB	AS
A	ISSUED FOR INTERNAL REVIEW	16-DEC-22	SBW	SB	AS

REVISIONS

9087A 198 Street Langley, BC Canada V1M 3B1
Phone : 604-936-4217
www.awcsolutions.com

THIS DRAWING IS THE PROPERTY OF AWC AND CONTAINS PROPRIETARY AND CONFIDENTIAL INFORMATION WHICH MUST NOT BE DUPLICATED, USED OR DISCLOSED OTHER THAN EXPRESSLY AUTHORIZED BY AWC.

CLIENT: CITY & BOROUGH OF WRANGELL
PROJECT: WRANGELL WTP
TITLE: PIPING & INSTRUMENTATION DIAGRAM
SCALE: NTS | PROJECTION | DEFAULT UNITS: in | SHEET SIZE: 17 x 11 | SHEET: 1 OF 2
DRAWING NO.: 17805-PR-PID-006 | REV: C

FILE: M:\SHARED\CUSTOMERS\CRW ENGINEERING\17805 WRANGELL AK\5 ENGINEERING\5.10 PROCESS\5.10.G P&IDS\5.10.G.1 P&IDS

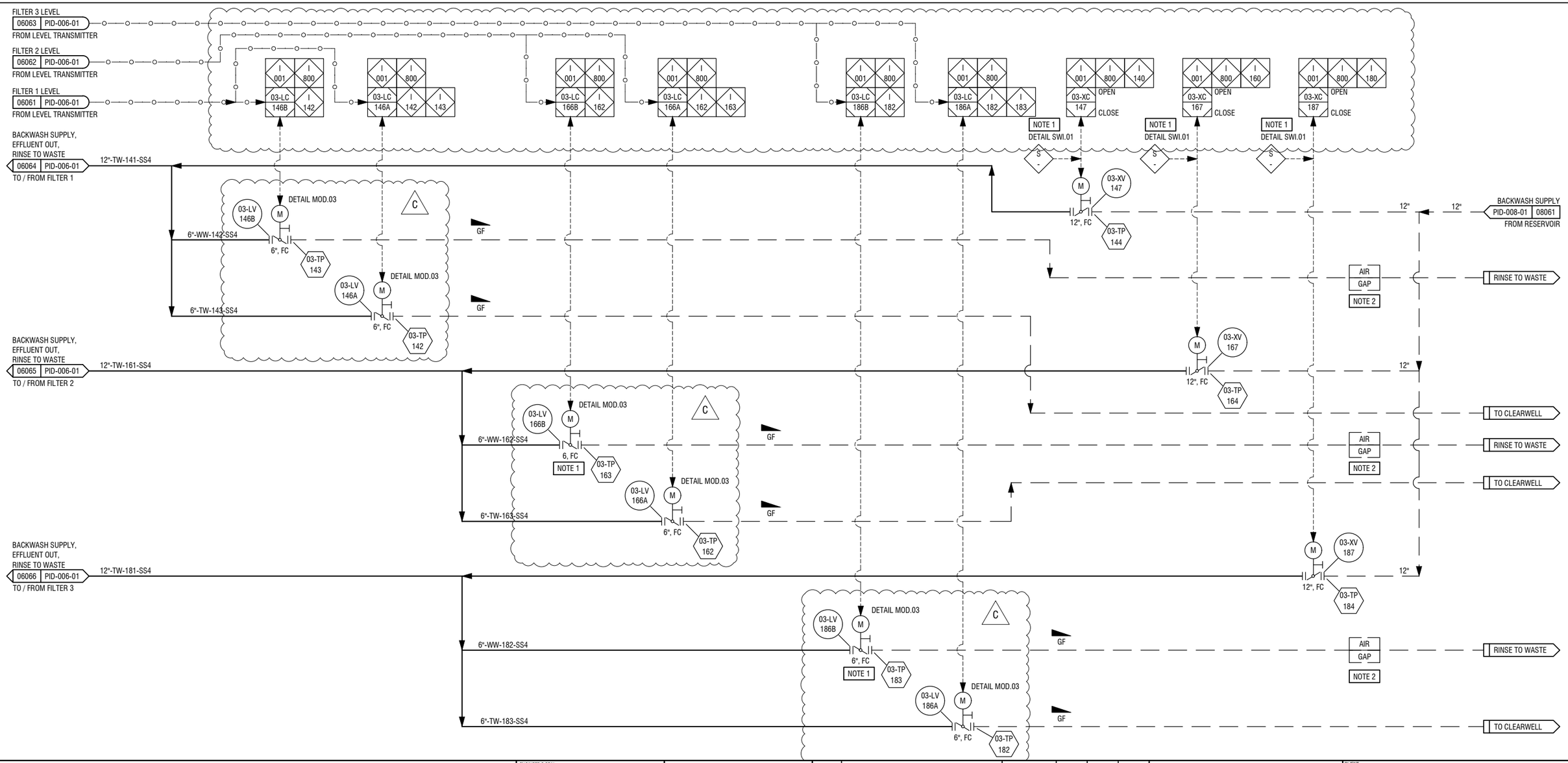

NOTES:
1. HOA SWITCH LOCATED ON 03-RCP-101
2. RINSE TO WASTE LINE SHOULD NOT TIE IN WITH OTHER WASTE LINES AND SHOULD INCLUDE AN AIR GAP TO PREVENT CROSS CONTAMINATION

ENGINEER'S SEAL

PRELIMINARY NOT FOR CONSTRUCTION

THE INFORMATION ON THIS DRAWING IS INTENDED FOR CONCEPTUAL DEVELOPMENT, PRELIMINARY DESIGN, OR FOR GUIDANCE ONLY. THIS DOCUMENT SHOULD NOT BE CONSIDERED A FINALIZED PROFESSIONAL WORK PRODUCT.

REV	DESCRIPTION	DATE	DFT	CHK	APP
C	ISSUED FOR DESIGN	23-FEB-23	JBW	SB	AS
B	ISSUED FOR REVIEW	21-DEC-22	SBW	SB	AS
A	ISSUED FOR INTERNAL REVIEW	16-DEC-22	SBW	SB	AS

REVISIONS

AWC
9087A 198 Street Langley, BC Canada V1M 3B1
Phone : 604-936-4217
www.awcsolutions.com

THIS DRAWING IS THE PROPERTY OF AWC AND CONTAINS PROPRIETARY AND CONFIDENTIAL INFORMATION WHICH MUST NOT BE DUPLICATED, USED OR DISCLOSED OTHER THAN EXPRESSLY AUTHORIZED BY AWC.

CLIENT: CITY & BOROUGH OF WRANGELL

PROJECT: WRANGELL WTP

TITLE: PIPING & INSTRUMENTATION DIAGRAM

SCALE	PROJECTION	DEFAULT UNITS	SHEET SIZE	SHEET
NTS		in	17 x 11	2 OF 2

DRAWING NO. 17805-PR-PID-006 REV C

FILE: M:\SHARED\CUSTOMERS\CRW ENGINEERING\17805 WRANGELL AK\5 ENGINEERING\5.10 PROCESS\5.10.G P&IDS\5.10.G.1 P&IDS

03-TK-240

FILTER TANK 4
MANUFACTURER: AWC
VOLUME: 8500 USGAL
SIZE: 10' L x 12' W x 10.5' H
MATERIAL:
PLATE, ALUMINUM 5086-H116
MEMBERS, ALUMINUM 6061-T6

03-TK-260

FILTER TANK 5
MANUFACTURER: AWC
VOLUME: 8500 USGAL
SIZE: 10' L x 12' W x 10.5' H
MATERIAL:
PLATE, ALUMINUM 5086-H116
MEMBERS, ALUMINUM 6061-T6

03-TK-280

FILTER TANK 6
MANUFACTURER: AWC
VOLUME: 8500 USGAL
SIZE: 10' L x 12' W x 10.5' H
MATERIAL:
PLATE, ALUMINUM 5086-H116
MEMBERS, ALUMINUM 6061-T6

FILTER 1 LEVEL 07071 PID-007-02 TO VALVES
FILTER 2 LEVEL 07072 PID-007-02 TO VALVES
FILTER 3 LEVEL 07073 PID-007-02 TO VALVES

CLARIFIED WATER 05073 PID-005-01 FROM DAF MANIFOLD
CLARIFIED WATER 07072 PID-005-01 FROM DAF MANIFOLD
CLARIFIED WATER 05071 PID-005-01 FROM DAF MANIFOLD

03-TK-240
03-SP-2403 18" ANTHRACITE
03-SP-2404 24" SAND
03-SP-2402

03-TK-260
03-SP-2603 18" ANTHRACITE
03-SP-2604 24" SAND
03-SP-2602

03-TK-280
03-SP-2803 18" ANTHRACITE
03-SP-2804 24" SAND
03-SP-2802

BACKWASH SUPPLY, EFFLUENT OUT, RINSE TO WASTE
07076 PID-007-02 TO / FROM FILTER 6
BACKWASH SUPPLY, EFFLUENT OUT, RINSE TO WASTE
07075 PID-007-02 TO / FROM FILTER 5
BACKWASH SUPPLY, EFFLUENT OUT, RINSE TO WASTE
07074 PID-007-02 TO / FROM FILTER 4

AIR SCOUR BY OTHERS

DIRECT FILTER PACKAGE B

NOTES:
1. HOA SWITCH LOCATED ON RCP-101
2. ADJUSTABLE WEIR PLATE
3. AIR SCOUR PIPING FROM BLOWER TO THE TRAIN, MUST LOOP ABOVE THE HIGH WATER LEVEL IN THE FILTER TANK, ASSUMING DOWNSTREAM OF THE BLOWER PACKAGE THERE IS A CHECK VALVE
4. RCP-201 TO BE PRE-WIRED AND MOUNTED DIRECT ON FILTER PACKAGE A. INTERCONNECTING WIRING AND TERMINATION TO BE DONE ON-SITE, BY OTHERS
5. ACCESS MANWAY; ALUMINUM PLATE COVER, BOLTED WITH GASKET TO THE TANK
6. WIRED BY AWC, SHIPPED LOOSE AND INSTALLED BY OTHERS
7. ONE COMMON TURBIDITY CONTROLLER FOR FILTER PACKAGE B

ENGINEER'S SEAL

PRELIMINARY NOT FOR CONSTRUCTION

THE INFORMATION ON THIS DRAWING IS INTENDED FOR CONCEPTUAL DEVELOPMENT, PRELIMINARY DESIGN, OR FOR GUIDANCE ONLY. THIS DOCUMENT SHOULD NOT BE CONSIDERED A FINALIZED PROFESSIONAL WORK PRODUCT.

REV	DESCRIPTION	DATE	DFT	CHK	APP
C	ISSUED FOR DESIGN	23-FEB-23	SBW	SB	AS
B	ISSUED FOR REVIEW	21-DEC-22	SBW	SB	AS
A	ISSUED FOR INTERNAL REVIEW	16-DEC-22	SBW	SB	AS

REVISIONS

9087A 198 Street Langley, BC Canada V1M 3B1
Phone : 604-936-4217
www.awcsolutions.com

THIS DRAWING IS THE PROPERTY OF AWC AND CONTAINS PROPRIETARY AND CONFIDENTIAL INFORMATION WHICH MUST NOT BE DUPLICATED, USED OR DISCLOSED OTHER THAN EXPRESSLY AUTHORIZED BY AWC.

CLIENT: CITY & BOROUGH OF WRANGELL
PROJECT: WRANGELL WTP
TITLE: PIPING & INSTRUMENTATION DIAGRAM
SCALE: NTS | PROJECTION | DEFAULT UNITS: in | SHEET SIZE: 17 x 11 | SHEET: 1 OF 2
DRAWING NO.: 17805-PR-PID-007 | REV: C

FILE: M:\SHARED\CUSTOMERS\CRW ENGINEERING\17805 WRANGELL AK\5 ENGINEERING\5.10 PROCESS\5.10.G P&IDS\5.10.G.1 P&IDS

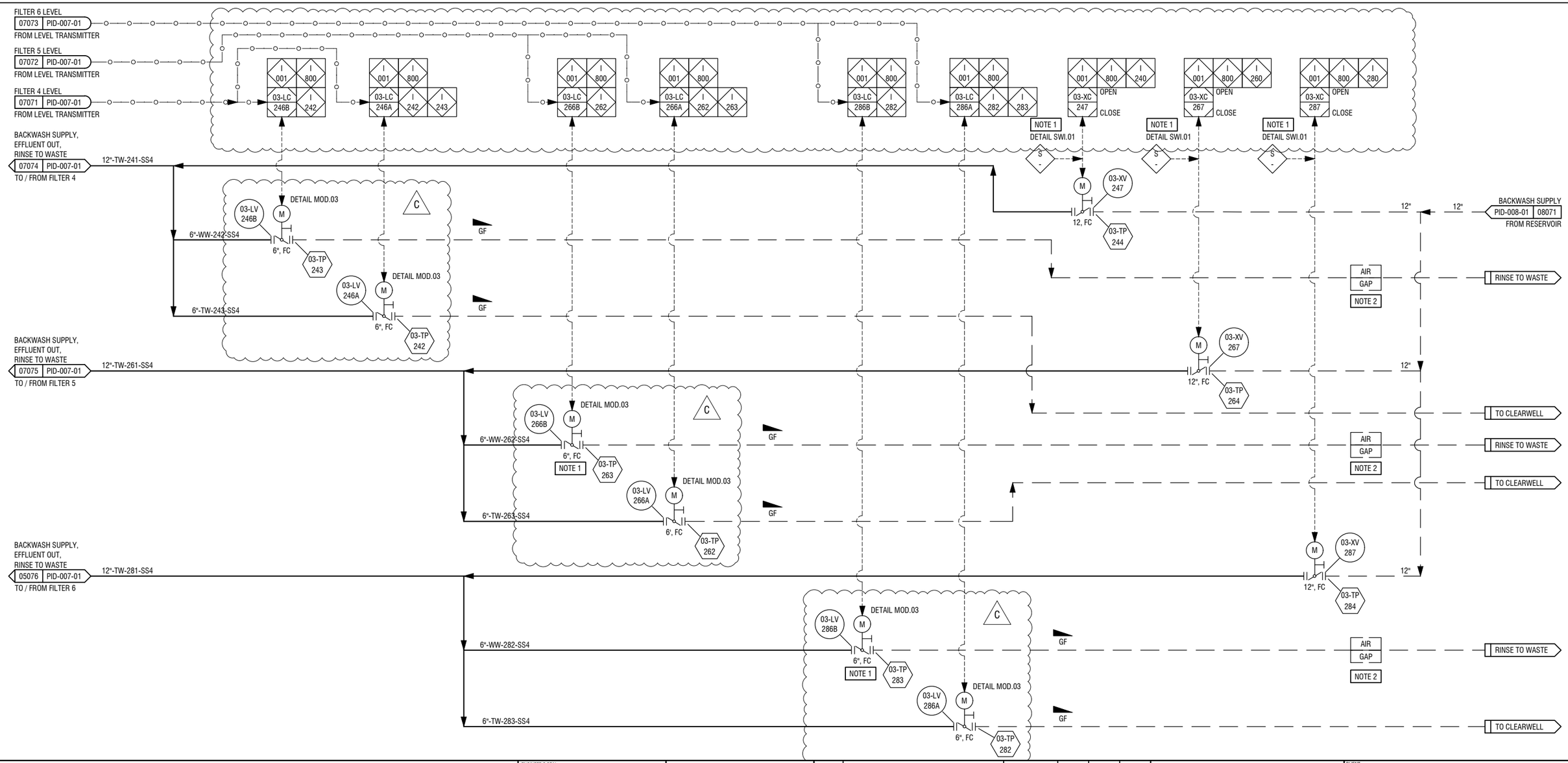

NOTES:
1. HOA SWITCH LOCATED ON 03-RCP-201
2. RINSE TO WASTE LINE SHOULD NOT TIE IN WITH OTHER WASTE LINES AND SHOULD INCLUDE AN AIR GAP TO PREVENT CROSS CONTAMINATION

ENGINEER'S SEAL

PRELIMINARY
NOT FOR CONSTRUCTION

THE INFORMATION ON THIS DRAWING IS INTENDED FOR CONCEPTUAL DEVELOPMENT, PRELIMINARY DESIGN, OR FOR GUIDANCE ONLY. THIS DOCUMENT SHOULD NOT BE CONSIDERED A FINALIZED PROFESSIONAL WORK PRODUCT.

REV	DESCRIPTION	DATE	DFT	CHK	APP
C	ISSUED FOR DESIGN	23-FEB-23	SBW	SB	AS
B	ISSUED FOR REVIEW	21-DEC-22	SBW	SB	AS
A	ISSUED FOR INTERNAL REVIEW	16-DEC-22	SBW	SB	AS

REVISIONS

AWC
9087A 198 Street Langley, BC Canada V1M 3B1
Phone : 604-936-4217
www.awcsolutions.com

THIS DRAWING IS THE PROPERTY OF AWC AND CONTAINS PROPRIETARY AND CONFIDENTIAL INFORMATION WHICH MUST NOT BE DUPLICATED, USED OR DISCLOSED OTHER THAN EXPRESSLY AUTHORIZED BY AWC.

CLIENT: CITY & BOROUGH OF WRANGELL

PROJECT: WRANGELL WTP

TITLE: PIPING & INSTRUMENTATION DIAGRAM

SCALE	PROJECTION	DEFAULT UNITS	SHEET SIZE	SHEET
NTS		in	17 x 11	2 OF 2

DRAWING NO. **17805-PR-PID-007** REV **C**

FILE: M:\SHARED\CUSTOMERS\CRW ENGINEERING\17805 WRANGELL AK\5 ENGINEERING\5.10 PROCESS\5.10.G P&IDS\5.10.G.1 P&IDS

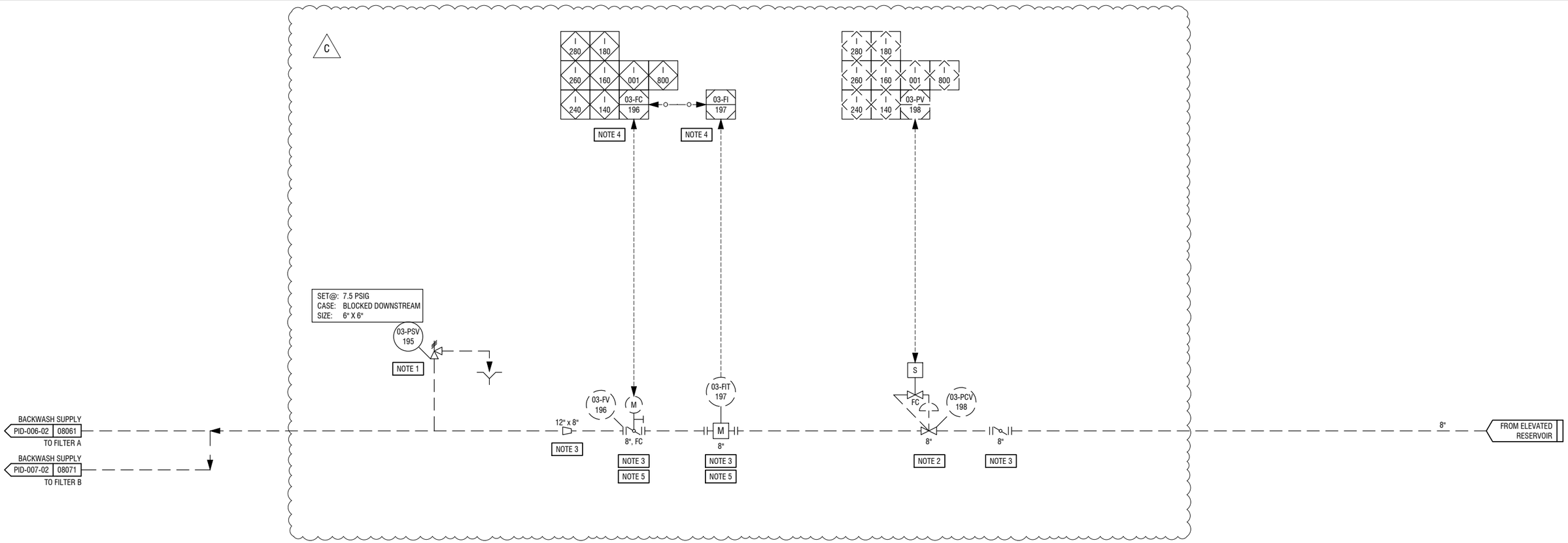

C

NOTES:

1. SHIPPED LOOSE BY AWC, INSTALLED BY OTHERS
2. GAINDUSTRIES FIGURE 5455 (OR EQUAL) PRESSURE REDUCING VALVE WITH SOLENOID SHUTOFF. 120 V SOLENOID, RED HAT OR EQUAL ENERGIZE TO OPEN (FAIL CLOSED). TO BE SUPPLIED, INSTALLED, POWERED AND CONTROLLED BY OTHERS
3. SUPPLIED AND INSTALLED BY OTHERS
4. CONTROLLED BY AWC ONLY. POWER BY OTHERS
5. BACKWASH FLOW CONTROL VALVE IS TO SLOW RAMP OPEN TO THE BACKWASH FLOWRATE. IT SHOULD CLOSE FAST (AS POSSIBLE WITH MOV) ON A TRIP

ENGINEER'S SEAL

PRELIMINARY
NOT FOR CONSTRUCTION

THE INFORMATION ON THIS DRAWING IS INTENDED FOR CONCEPTUAL DEVELOPMENT, PRELIMINARY DESIGN, OR FOR GUIDANCE ONLY. THIS DOCUMENT SHOULD NOT BE CONSIDERED A FINALIZED PROFESSIONAL WORK PRODUCT.

REV	DESCRIPTION	DATE	DFT	CHK	APP
C	ISSUED FOR DESIGN	23-FEB-23	SBW	SB	AS
B	ISSUED FOR REVIEW	21-DEC-22	SBW	SB	AS
A	ISSUED FOR INTERNAL REVIEW	16-DEC-22	SBW	SB	AS

REVISIONS

9087A 198 Street Langley, BC Canada V1M 3B1
Phone : 604-936-4217
www.awcsolutions.com

THIS DRAWING IS THE PROPERTY OF AWC AND CONTAINS PROPRIETARY AND CONFIDENTIAL INFORMATION WHICH MUST NOT BE DUPLICATED, USED OR DISCLOSED OTHER THAN EXPRESSLY AUTHORIZED BY AWC.

CLIENT: CITY & BOROUGH OF WRANGELL

PROJECT: WRANGELL WTP

TITLE: PIPING & INSTRUMENTATION DIAGRAM

SCALE	PROJECTION	DEFAULT UNITS	SHEET SIZE	SHEET
NTS		in	17 x 11	1 OF 1

DRAWING NO. 17805-PR-PID-008 REV C

FILE: M:\SHARED\CUSTOMERS\CRW ENGINEERING\17805 WRANGELL AK\5 ENGINEERING\5.10 PROCESS\5.10.G P&IDS\5.10.G.1 P&IDS

MISCELLANEOUS SIGNALS AND ALARMS

REV	SIGNAL TAG #	TAG DESCRIPTION	INTERLOCK #	SYSTEM	LOCATION	EQUIPMENT TAG #		REV	SIGNAL TAG #	TAG DESCRIPTION	INTERLOCK #	SYSTEM	LOCATION	EQUIPMENT TAG #
B	02-XHS-001	E-STOP PUSHBUTTON	--	PLC	02-LCP-001	02-ESB-001		B	03-XHS-101	E-STOP PUSHBUTTON	--	PLC	03-RCP-101	03-ESB-101
B	02-XHA-001	E-STOP PUSHBUTTON ALARM	---	PLC	02-LCP-001	---		B	03-XHA-101	E-STOP PUSHBUTTON ALARM	---	PLC	03-RCP-101	---
B	02-XHS-001	E-STOP RESET BUTTON	--	PLC	02-LCP-001	02-RPB-001		B	03-ES-720A	120V SURGE PROTECTOR ALARM CONTACT	--	PLC	03-RCP-101	03-SP-101
B	02-XS-001	E-STOP RELAY	--	PLC	02-LCP-001	02-ESR-001		B	03-EA-720A	120V SURGE PROTECTOR ALARM	--	PLC	03-RCP-101	--
B	02-XA-001A	E-STOP RELAY ALARM	--	PLC	02-LCP-001	--		B	03-ES-724A	24VDC POWER SUPPLY CONTACT	--	PLC	03-RCP-101	03-PS-101
B	02-XA-001B	E-STOP RELAY CONTACT	--	CLIENT	02-LCP-001	02-ESR-001		B	03-EA-724A	24VDC POWER SUPPLY ALARM	--	PLC	03-RCP-101	--
B	02-ES-720	120V SURGE PROTECTOR ALARM CONTACT	--	PLC	02-LCP-001	02-SP-001		B	03-ES-725A	UPS - MULTIPLE ALARM CONTACT	--	PLC	03-RCP-101	03-UPS-101
B	02-EA-720	120V SURGE PROTECTOR ALARM	--	PLC	02-LCP-001	--		B	03-EA-725A	UPS - MULTIPLE ALARM	--	PLC	03-RCP-101	--
B	02-ES-724	24VDC POWER SUPPLY CONTACT	--	PLC	02-LCP-001	02-PS-001		B	03-ES-726A	UPS - UTILITY FAIL CONTACT	--	PLC	03-RCP-101	03-UPS-101
B	02-EA-724	24VDC POWER SUPPLY ALARM	--	PLC	02-LCP-001	--		B	03-EA-726A	UPS - UTILITY FAIL ALARM	--	PLC	03-RCP-101	--
A	02-ES-725	UPS - MULTIPLE ALARM CONTACT	--	PLC	02-LCP-001	02-UPS-001								
B	02-EA-725	UPS - MULTIPLE ALARM	--	PLC	02-LCP-001	--								
B	02-ES-726	UPS - UTILITY FAIL CONTACT	--	PLC	02-LCP-001	02-UPS-001								
B	02-EA-726	UPS - UTILITY FAIL ALARM	--	PLC	02-LCP-001	--								
REV	SIGNAL TAG #	TAG DESCRIPTION	INTERLOCK #	SYSTEM	LOCATION	EQUIPMENT TAG #								
B	03-XHS-201	E-STOP PUSHBUTTON	--	PLC	03-RCP-201	03-ESB-201								
B	03-XHA-201	E-STOP PUSHBUTTON ALARM	---	PLC	03-RCP-201	---								
B	03-ES-720B	120V SURGE PROTECTOR ALARM CONTACT	--	PLC	03-RCP-201	03-SP-201								
B	03-EA-720B	120V SURGE PROTECTOR ALARM	--	PLC	03-RCP-201	--								
B	03-ES-724B	24VDC POWER SUPPLY CONTACT	--	PLC	03-RCP-201	03-PS-201								
B	03-EA-724B	24VDC POWER SUPPLY ALARM	--	PLC	03-RCP-201	--								
B	03-ES-725B	UPS - MULTIPLE ALARM CONTACT	--	PLC	03-RCP-201	03-UPS-201								
B	03-EA-725B	UPS - MULTIPLE ALARM	--	PLC	03-RCP-201	--								
B	03-ES-726B	UPS - UTILITY FAIL CONTACT	--	PLC	03-RCP-201	03-UPS-201								
B	03-EA-726B	UPS - UTILITY FAIL ALARM	--	PLC	03-RCP-201	--								

NOTES:

1.

ENGINEER'S SEAL

PRELIMINARY
NOT FOR CONSTRUCTION

THE INFORMATION ON THIS DRAWING IS INTENDED FOR CONCEPTUAL DEVELOPMENT, PRELIMINARY DESIGN, OR FOR GUIDANCE ONLY. THIS DOCUMENT SHOULD NOT BE CONSIDERED A FINALIZED PROFESSIONAL WORK PRODUCT.

REV	DESCRIPTION	DATE	DFT	CHK	APP
C	ISSUED FOR DESIGN	23-FEB-23	SBW	SB	AS
B	ISSUED FOR REVIEW	21-DEC-22	SBW	SB	AS
A	ISSUED FOR INTERNAL REVIEW	16-DEC-22	SBW	SB	AS

REVISIONS

9087A 198 Street Langley, BC Canada V1M 3B1
Phone : 604-936-4217
www.awcsolutions.com

THIS DRAWING IS THE PROPERTY OF AWC AND CONTAINS PROPRIETARY AND CONFIDENTIAL INFORMATION WHICH MUST NOT BE DUPLICATED, USED OR DISCLOSED OTHER THAN EXPRESSLY AUTHORIZED BY AWC.

CLIENT: CITY & BOROUGH OF WRANGELL

PROJECT: WRANGELL WTP

TITLE: PIPING & INSTRUMENTATION DIAGRAM

SCALE	PROJECTION	DEFAULT UNITS	SHEET SIZE	SHEET
NTS		in	17 x 11	1 OF 1

DRAWING NO. **17805-PR-PID-010** REV **C**

FILE: M:\SHARED\CUSTOMERS\CRW ENGINEERING\17805 WRANGELL AK\5 ENGINEERING\5.10 PROCESS\5.10.G P&IDS\5.10.G.1 P&IDS

PROJECT NAME: WRANGELL WTP

PROJECT NO.: 17805

DOCUMENT NAME: INSTRUMENT INDEX

DOCUMENT NO.: 17805-IC-IDX-001

B	22 Feb 23	Issued for Review	MTB MTB	CV CV	MSM
A	06 Jan 23	Issued for Review	CV	MTB	PC
Rev	**Date**	**Revision Description**	**Originator**	**Checker**	**Approver**

INSTRUMENT INDEX

Rev	Equipment No	Loop Number	Loop Service	Tag Number	Tag Description	P&ID	Sheet	Status	IO Type Name	System	Instrument Type	Power Voltage	Control Voltage	Signal	Power / Current	UPS Powered	Location	Wired To/From	Notes
A	02-LCP-001	02-X-001	ESD System Shutdown	02-XHS-001A	ESD System Shutdown - Local Switch	17805-PR-PID-001	1 of 2	New	-	ELEC	Panel Mounted E-STOP Pushbutton	-	-	-	-	-	02-LCP-001	02-LCP-001	Hardwired into Electrical Power Switch
A	02-ESB-001	02-X-001	ESD System Shutdown	02-XHS-001A	ESD System Shutdown - Local Switch	17805-PR-PID-001	1 of 2	New	DI	PLC	Panel Mounted E-STOP Pushbutton	-	See Note	-	-	-	02-LCP-001	02-LCP-001	24 VDC for contacts, 120 VAC for Coil
A	02-RPB-001	02-X-001	ESD System Reset	02-XHS-001B	ESD System Reset - Local Switch	17805-PR-PID-001	1 of 2	New	DI	PLC	Panel Mounted Push Button	-	24 VDC	-	-	-	02-LCP-001	02-LCP-001	
A	02-LCP-001	02-F-100	DAF Train 1 Auto/Off	02-FHS-100	DAF Train 1 Local "Auto/Off" Switch	17805-PR-PID-001	1 of 2	New	DI	PLC	Hand - Switch - Panel Mounted	-	24 VDC	-	-	-	02-LCP-001	02-LCP-001	
A	02-LCP-001	02-F-200	DAF Train 2 Auto/Off	02-FHS-200	DAF Train 2 Local "Auto/Off" Switch	17805-PR-PID-001	1 of 2	New	DI	PLC	Hand - Switch - Panel Mounted	-	24 VDC	-	-	-	02-LCP-001	02-LCP-001	
A	02-LCP-001	02-F-300	DAF Train 3 Auto/Off	02-FHS-300	DAF Train 3 Local "Auto/Off" Switch	17805-PR-PID-001	1 of 2	New	DI	PLC	Hand - Switch - Panel Mounted	-	24 VDC	-	-	-	02-LCP-001	02-LCP-001	
A	02-LCP-001	02-A-003	LCP-001 Common Alarm	02-AS-003	Fault Common Alarm from PLC to Client Main Control Panel	17805-PR-PID-001	1 of 2	New	DO	PLC	Relay Output	-	24 VDC	-	-	-	02-LCP-001	Main Control Panel (MCP)	LCP-001 common failure alarm
A	02-LCP-001	02-F-004	MCP Flow Control Setpoint	02- FY-004	System Flow Control Setpoint from Client Main Control Panel to AWC PLC	17805-PR-PID-001	1 of 2	New	AI	PLC	MCP System - Flow Control Setpoint	-	24 VDC	4-20 mA	-	-	02-LCP-001	Main Control Panel (MCP)	
A	-	02-F-006	Raw Water Inlet	02-FFC-006	Raw Water Inlet Master Flow Control Setpoint	17805-PR-PID-001	1 of 2	New	Soft	PLC	Controller Setpoint	-	-	-	-	-	02-LCP-001	-	
A	02-LCP-001	02-X-007	MCP Process Permission to Run	02-XU-007	Client Main Control Panel Permission to Run Signal to AWC PLC	17805-PR-PID-001	1 of 2	New	DI	PLC	Relay Dry Contact	-	24 VDC	-	-	-	Main Control Panel (MCP)	02-LCP-001	
A	02-LCP-001	02-A-009	Ethernet Comm	02-AX-009	Ethernet Communication Interface Signal between AWC PLC and Client Main Control Panel	17805-PR-PID-001	1 of 2	New	Soft	PLC	Communication Module	-	-	Ethernet	-	-	02-LCP-001	Main Control Panel (MCP)	Refer to Serial Interface List
A	01-FIT-013	01-F-013	Raw Water Inlet	01-FIT-013	Raw Water Inlet Flowmeter	17805-PR-PID-001	2 of 2	New	AI	PLC	Flow - Electromagnetic Flowmeter	Note 1	24 VDC	4-20 mA	-	See Note	Field	02-LCP-001	Supplied and Powered By Others. Only 4-20mA flow signal to AWC PLC.
A	-	01-F-013	Raw Water Inlet	01-FI-013	Raw Water Inlet Flow Indication	17805-PR-PID-001	2 of 2	New	Soft	PLC	Flow - Indication	-	-	-	-	-	02-LCP-001	-	
A	01-FV-014	01-F-014	Raw Water Inlet	01-FV-014	Raw Water Inlet Valve	17805-PR-PID-001	2 of 2	New	-	-	Valve - Butterfly	-	-	-	-	-	Field	-	Valve supplied, installed, and powered by others. Signals to AWC PLC.
A	01-FV-014	01-F-014	Raw Water Inlet	01-FC-014	Raw Water Inlet Valve Position Output Signal	17805-PR-PID-001	2 of 2	New	AO	PLC	Controller - Valve Position Output	-	-	4-20 mA	-	-	02-LCP-001	Field	
A	01-FV-014	01-F-014	Raw Water Inlet	01-FZT-014	Raw Water Inlet Valve Position Feedback Signal	17805-PR-PID-001	2 of 2	New	AI	PLC	Valve - Position Feedback	-	-	4-20 mA	-	-	Field	02-LCP-001	
A	-	01-F-014	Raw Water Inlet	01-FZI-014	Raw Water Inlet Valve Position Feedback Indication	17805-PR-PID-001	2 of 2	New	Soft	PLC	Valve - Indication - Position	-	-	-	-	-	02-LCP-001	-	
A	01-FV-014	01-F-014	Raw Water Inlet	01-FS-014	Raw Water Inlet Valve Fault Signal	17805-PR-PID-001	2 of 2	New	DI	PLC	Valve - Actuator Fault Output	-	24 VDC	-	-	No	Field	02-LCP-001	
A	-	01-F-014	Raw Water Inlet	01-FA-014	Raw Water Inlet Valve Fault Alarm	17805-PR-PID-001	2 of 2	New	Soft	PLC	Valve - Alarm - Fault	-	-	-	-	-	02-LCP-001	-	
A	01-LIT-020	01-L-020	Rapid Mix Tank	01-LIT-020	Rapid Mix Tank Level Transmitter	17805-PR-PID-001	2 of 2	New	AI	PLC	Level - Transmitter - Open Path Radar	-	24 VDC	4-20 mA	-	-	Field	02-LCP-001	
A	-	01-L-020	Rapid Mix Tank	01-LI-020	Rapid Mix Tank Level Indication	17805-PR-PID-001	2 of 2	New	Soft	PLC	Level - Indication	-	-	-	-	-	02-LCP-001	-	
A	-	01-L-020	Rapid Mix Tank	01-LAH-020	Rapid Mix Tank Level Alarm High	17805-PR-PID-001	2 of 2	New	Soft	PLC	Level - Alarm High	-	-	-	-	-	02-LCP-001	-	
A	-	01-L-020	Rapid Mix Tank	01-LAL-020	Rapid Mix Tank Level Alarm Low	17805-PR-PID-001	2 of 2	New	Soft	PLC	Level - Alarm Low	-	-	-	-	-	02-LCP-001	-	
B	01-MX-021	01-H-021	Rapid Mixer 1	01-HS-021A	Rapid Mixer 1 HOA Switch - Auto	17805-PR-PID-001	2 of 2	New	Soft	PLC	Switch - Local Mounted HOA	-	-	Ethernet	-	-	FIELD	Client	HOA Switch installed in field near motor. Wired to customer system.
B	01-MX-021	01-H-021	Rapid Mixer 1	01-HS-021B	Rapid Mixer 1 HOA Switch - Hand	17805-PR-PID-001	2 of 2	New	Soft	PLC	Switch - Local Mounted HOA	-	-	Ethernet	-	-	FIELD	Client	HOA Switch installed in field near motor. Wired to customer system.
B	01-MX-021	01-H-021	Rapid Mixer 1	01-HI-021	Rapid Mixer 1 HOA Switch - Hand/Auto Indication	17805-PR-PID-001	2 of 2	New	Soft	PLC	Switch - Indication - Position	-	-	-	-	-	02-LCP-001	-	
B	-	01-H-021	Rapid Mixer 1	01-HC-021	Rapid Mixer 1 Speed Controller	17805-PR-PID-001	2 of 2	New	Soft	PLC	Controller - VFD Controller	-	-	Ethernet	-	-	02-LCP-001	01-MX-021 VFD	VFD Supplied and Installed by Others
B		01-H-021	Rapid Mixer 1	01-SI-021	Rapid Mixer 1 Speed Feedback	17805-PR-PID-001	2 of 2	New	Soft	PLC	Motor - Indication - Speed	-	-	Ethernet	-	-	02-LCP-001	01-MX-021 VFD	VFD Supplied and Installed by Others
B	-	01-H-021	Rapid Mixer 1	01-UI-021	Rapid Mixer 1 Motor Status Indication	17805-PR-PID-001	2 of 2	New	Soft	PLC	Motor - Indication - Status	-	-	Ethernet	-	-	02-LCP-001	01-MX-021 VFD	VFD Supplied and Installed by Others
B	-	01-H-021	Rapid Mixer 1	01-UA-021	Rapid Mixer 1 Motor Fault Alarm	17805-PR-PID-001	2 of 2	New	Soft	PLC	Motor - Alarm - Fault	-	-	Ethernet	-	-	02-LCP-001	01-MX-021 VFD	VFD Supplied and Installed by Others
B	01-MX-022	01-H-022	Rapid Mixer 2	01-HS-022A	Rapid Mixer 2 HOA Switch - Auto	17805-PR-PID-001	2 of 2	New	Soft	PLC	Switch - Local Mounted HOA	-	-	Ethernet	-	-	FIELD	Client	HOA Switch installed in field near motor. Wired to customer system.
B	01-MX-022	01-H-022	Rapid Mixer 2	01-HS-022B	Rapid Mixer 2 HOA Switch - Hand	17805-PR-PID-001	2 of 2	New	Soft	PLC	Switch - Local Mounted HOA	-	-	Ethernet	-	-	FIELD	Client	HOA Switch installed in field near motor. Wired to customer system.
B	01-MX-022	01-H-022	Rapid Mixer 2	01-HI-022	Rapid Mixer 2 HOA Switch - Hand/Auto Indication	17805-PR-PID-001	2 of 2	New	Soft	PLC	Switch - Indication - Position	-	-	-	-	-	02-LCP-001	-	
B	-	01-H-022	Rapid Mixer 2	01-HC-022	Rapid Mixer 2 Speed Controller	17805-PR-PID-001	2 of 2	New	Soft	PLC	Controller - VFD Controller	-	-	Ethernet	-	-	02-LCP-001	01-MX-022 VFD	VFD Supplied and Installed by Others
B		01-H-022	Rapid Mixer 2	01-SI-022	Rapid Mixer 2 Speed Feedback	17805-PR-PID-001	2 of 2	New	Soft	PLC	Motor - Indication - Speed	-	-	Ethernet	-	-	02-LCP-001	01-MX-022 VFD	VFD Supplied and Installed by Others
B	-	01-H-022	Rapid Mixer 2	01-UI-022	Rapid Mixer 2 Motor Status Indication	17805-PR-PID-001	2 of 2	New	Soft	PLC	Motor - Indication - Status	-	-	Ethernet	-	-	02-LCP-001	01-MX-022 VFD	VFD Supplied and Installed by Others
B	-	01-H-022	Rapid Mixer 2	01-UA-022	Rapid Mixer 2 Motor Fault Alarm	17805-PR-PID-001	2 of 2	New	Soft	PLC	Motor - Alarm - Fault	-	-	Ethernet	-	-	02-LCP-001	01-MX-022 VFD	VFD Supplied and Installed by Others
A	-	02-X-104	DAF Train 1 Raw Water Inlet	02-XV-104	DAF Train 1 Raw Water Inlet Valve	17805-PR-PID-002	1 of 3	New	-	-	Butterfly Valve	-	-	-	-	-	Field	-	
B	02-XV-104	02-X-104	DAF Train 1 Raw Water Inlet	02-XY-104	DAF Train 1 Raw Water Inlet Valve Actuator	17805-PR-PID-002	1 of 3	New	-	-	Valve - Control - Actuator - Electric	120 VAC	-	-	0.45kW	Yes	Field	02-LCP-001	
B	02-LCP-001	02-X-104	DAF Train 1 Raw Water Inlet	02-XHS-104A	DAF Train 1 Raw Water Inlet Valve HOA Switch - Auto	17805-PR-PID-002	1 of 3	New	DI	PLC	Switch - Panel Mounted HOA	-	24 VDC	-	-	No	02-LCP-001	02-LCP-001	
B	-	02-X-104	DAF Train 1 Raw Water Inlet	02-XHS-104B	DAF Train 1 Raw Water Inlet Valve HOA Switch - Hand	17805-PR-PID-002	1 of 3	New	DI	PLC	Switch - Panel Mounted HOA	-	24 VDC	-	-	No	02-LCP-001	02-LCP-001	
B	-	02-X-104	DAF Train 1 Raw Water Inlet	02-XHI-104	DAF Train 1 Raw Water Inlet Valve HOA Switch - Hand/Auto Indication	17805-PR-PID-002	1 of 3	New	Soft	PLC	Switch - Indication - Position	-	-	-	-	-	02-LCP-001	-	
B	02-XV-104	02-X-104	DAF Train 1 Raw Water Inlet	02-XC-104	DAF Train 1 Raw Water Inlet Valve Command Open/Closed	17805-PR-PID-002	1 of 3	New	DO	PLC	Controller - Valve Position Output	-	24 VDC	-	-	No	02-LCP-001	Field	De-energize to close
B	02-XV-104	02-X-104	DAF Train 1 Raw Water Inlet	02-XSC-104	DAF Train 1 Raw Water Inlet Valve Position Switch Closed	17805-PR-PID-002	1 of 3	New	DI	PLC	Valve - Switch - Position	-	24 VDC	-	-	No	Field	02-LCP-001	
B	-	02-X-104	DAF Train 1 Raw Water Inlet	02-XIC-104	DAF Train 1 Raw Water Inlet Valve Position Indication Closed	17805-PR-PID-002	1 of 3	New	Soft	PLC	Valve - Indication - Position	-	-	-	-	-	02-LCP-001	-	
B	02-XV-104	02-X-104	DAF Train 1 Raw Water Inlet	02-XSO-104	DAF Train 1 Raw Water Inlet Valve Position Switch Open	17805-PR-PID-002	1 of 3	New	DI	PLC	Valve - Switch - Position	-	24 VDC	-	-	No	Field	02-LCP-001	
B	-	02-X-104	DAF Train 1 Raw Water Inlet	02-XIO-104	DAF Train 1 Raw Water Inlet Valve Position Indication Open	17805-PR-PID-002	1 of 3	New	Soft	PLC	Valve - Indication - Position	-	-	-	-	-	02-LCP-001	-	
B	-	02-X-104	DAF Train 1 Raw Water Inlet	02-XAD-104	DAF Train 1 Raw Water Inlet Valve Position Discrepancy Alarm	17805-PR-PID-002	1 of 3	New	Soft	PLC	Valve - Alarm - Discrepancy	-	-	-	-	-	02-LCP-001	02-LCP-001	
B	02-XV-104	02-X-104	DAF Train 1 Raw Water Inlet	02-XS-104	DAF Train 1 Raw Water Inlet Valve Fault Signal	17805-PR-PID-002	1 of 3	New	DI	PLC	Valve - Actuator Fault Output	-	24 VDC	-	-	No	Field	02-LCP-001	
B	-	02-X-104	DAF Train 1 Raw Water Inlet	02-XA-104	DAF Train 1 Raw Water Inlet Valve Fault Alarm	17805-PR-PID-002	1 of 3	New	Soft	PLC	Valve - Alarm - Fault	-	-	-	-	-	02-LCP-001	-	
B	02-XV-104	02-X-104	DAF Train 1 Raw Water Inlet	02-XHS-104C	DAF Train 1 Raw Water Inlet Valve Local/Remote Switch	17805-PR-PID-002	1 of 3	New	DI	PLC	Valve - Switch - Local/Remote	-	24 VDC	-	-	No	Field	02-LCP-001	
B	-	02-X-104	DAF Train 1 Raw Water Inlet	02-XAR-104	DAF Train 1 Raw Water Inlet Valve Remote Indication	17805-PR-PID-002	1 of 3	New	Soft	PLC	Valve - Indication - Remote	-	-	-	-	-	02-LCP-001	-	
B	02-MX-103	02-H-103	DAF Train 1 Stage 1 Flocculator	02-HS-103A	DAF Train 1 Stage 1 Flocculation Mixer HOA Switch - Auto	17805-PR-PID-002	1 of 3	New	Soft	PLC	Switch - Local Mounted HOA	-	-	Ethernet	-	-	FIELD	Client	HOA Switch installed in field near motor. Wired to customer system.
B	02-MX-103	02-H-103	DAF Train 1 Stage 1 Flocculator	02-HS-103B	DAF Train 1 Stage 1 Flocculation Mixer HOA Switch - Hand	17805-PR-PID-002	1 of 3	New	Soft	PLC	Switch - Local Mounted HOA	-	-	Ethernet	-	-	FIELD	Client	HOA Switch installed in field near motor. Wired to customer system.
B	-	02-H-103	DAF Train 1 Stage 1 Flocculator	02-HI-103	DAF Train 1 Stage 1 Flocculation Mixer Hand/Auto Indication	17805-PR-PID-002	1 of 3	New	Soft	PLC	Switch - Indication - Position	-	-	-	-	-	02-LCP-001	-	
B	-	02-H-103	DAF Train 1 Stage 1 Flocculator	02-HC-103	DAF Train 1 Stage 1 Flocculation Mixer Speed Controller	17805-PR-PID-002	1 of 3	New	Soft	PLC	Controller - VFD Controller	-	-	Ethernet	-	-	02-LCP-001	02-MX-103 VFD	VFD Supplied and Installed by Others
B		02-H-103	DAF Train 1 Stage 1 Flocculator	02-SI-103	DAF Train 1 Stage 1 Flocculation Mixer Speed Feedback	17805-PR-PID-002	1 of 3	New	Soft	PLC	Motor - Indication - Speed	-	-	Ethernet	-	-	02-LCP-001	02-MX-103 VFD	VFD Supplied and Installed by Others
B	-	02-H-103	DAF Train 1 Stage 1 Flocculator	02-UI-103	DAF Train 1 Stage 1 Flocculation Mixer Motor Status Indication	17805-PR-PID-002	1 of 3	New	Soft	PLC	Motor - Indication - Status	-	-	Ethernet	-	-	02-LCP-001	02-MX-103 VFD	VFD Supplied and Installed by Others
B	-	02-H-103	DAF Train 1 Stage 1 Flocculator	02-UA-103	DAF Train 1 Stage 1 Flocculation Mixer Motor Fault Alarm	17805-PR-PID-002	1 of 3	New	Soft	PLC	Motor - Alarm - Fault	-	-	Ethernet	-	-	02-LCP-001	02-MX-103 VFD	VFD Supplied and Installed by Others
B	02-MX-105	02-H-105	DAF Train 1 Stage 2 Flocculator	02-HS-105A	DAF Train 1 Stage 2 Flocculation Mixer HOA Switch - Auto	17805-PR-PID-002	1 of 3	New	Soft	PLC	Switch - Local Mounted HOA	-	-	Ethernet	-	-	FIELD	Client	HOA Switch installed in field near motor. Wired to customer system.
B	02-MX-105	02-H-105	DAF Train 1 Stage 2 Flocculator	02-HS-105B	DAF Train 1 Stage 2 Flocculation Mixer HOA Switch - Hand	17805-PR-PID-002	1 of 3	New	Soft	PLC	Switch - Local Mounted HOA	-	-	Ethernet	-	-	FIELD	Client	HOA Switch installed in field near motor. Wired to customer system.
B	-	02-H-105	DAF Train 1 Stage 2 Flocculator	02-HI-105	DAF Train 1 Stage 2 Flocculation Mixer Hand/Auto Indication	17805-PR-PID-002	1 of 3	New	Soft	PLC	Switch - Indication - Position	-	-	-	-	-	02-LCP-001	-	
B	-	02-H-105	DAF Train 1 Stage 2 Flocculator	02-HC-105	DAF Train 1 Stage 2 Flocculation Mixer Speed Controller	17805-PR-PID-002	1 of 3	New	Soft	PLC	Controller - VFD Controller	-	-	Ethernet	-	-	02-LCP-001	02-MX-105 VFD	VFD Supplied and Installed by Others
B		02-H-105	DAF Train 1 Stage 2 Flocculator	02-SI-105	DAF Train 1 Stage 2 Flocculation Mixer Speed Feedback	17805-PR-PID-002	1 of 3	New	Soft	PLC	Motor - Indication - Speed	-	-	Ethernet	-	-	02-LCP-001	02-MX-105 VFD	VFD Supplied and Installed by Others
B	-	02-H-105	DAF Train 1 Stage 2 Flocculator	02-UI-105	DAF Train 1 Stage 2 Flocculation Mixer Motor Status Indication	17805-PR-PID-002	1 of 3	New	Soft	PLC	Motor - Indication - Status	-	-	Ethernet	-	-	02-LCP-001	02-MX-105 VFD	VFD Supplied and Installed by Others
B	-	02-H-105	DAF Train 1 Stage 2 Flocculator	02-UA-105	DAF Train 1 Stage 2 Flocculation Mixer Motor Fault Alarm	17805-PR-PID-002	1 of 3	New	Soft	PLC	Motor - Alarm - Fault	-	-	Ethernet	-	-	02-LCP-001	02-MX-105 VFD	VFD Supplied and Installed by Others
B	02-LCP-001	02-U-114	DAF Train 1 Trough Spray	02-UHS-114A	DAF Train 1 Trough Spray Valve Auto	17805-PR-PID-002	1 of 3	New	DI	PLC	Switch - Panel Mounted HOA	-	24 VDC	-	-	-	02-LCP-001	02-LCP-001	
B	02-LCP-001	02-U-114	DAF Train 1 Trough Spray	02-UHS-114B	DAF Train 1 Trough Spray Valve Hand	17805-PR-PID-002	1 of 3	New	DI	PLC	Switch - Panel Mounted HOA	-	24 VDC	-	-	-	02-LCP-001	02-LCP-001	
B	-	02-U-114	DAF Train 1 Trough Spray	02-UHI-114	DAF Train 1 Trough Spray Valve Hand/Auto Indication	17805-PR-PID-002	1 of 3	New	Soft	PLC	Switch - Indication - Position	-	-	-	-	-	02-LCP-001	-	
B	-	02-U-114	DAF Train 1 Trough Spray	02-UV-114	DAF Train 1 Trough Spray Valve	17805-PR-PID-002	1 of 3	New	-	-	Valve - 2-Way Solenoid	120 VAC	-	-	6 W	-	Field	-	
B	-	02-U-114	DAF Train 1 Trough Spray	02-UC-114	DAF Train 1 Trough Spray Valve Position Command	17805-PR-PID-002	1 of 3	New	DO	PLC	Controller - Valve Position Output	-	24 VDC	-	-	-	02-LCP-001	Field	
B	02-LCP-001	02-H-111	DAF Train 1 Skimmer	02-HS-111A	DAF Train 1 Skimmer HOA Switch Auto	17805-PR-PID-002	1 of 3	New	Soft	PLC	Switch - Local Mounted HOA	-	-	Ethernet	-	-	FIELD	Client	HOA Switch installed in field near motor. Wired to customer system.
B	02-LCP-001	02-H-111	DAF Train 1 Skimmer	02-HS-111B	DAF Train 1 Skimmer HOA Switch Hand	17805-PR-PID-002	1 of 3	New	Soft	PLC	Switch - Local Mounted HOA	-	-	Ethernet	-	-	FIELD	Client	HOA Switch installed in field near motor. Wired to customer system.
B	-	02-H-111	DAF Train 1 Skimmer	02-HI-111	DAF Train 1 Skimmer Hand/Auto Indication	17805-PR-PID-002	1 of 3	New	Soft	PLC	Switch - Indication - Position	-	-	-	-	-	02-LCP-001	-	
B	-	02-H-111	DAF Train 1 Skimmer	02-HC-111	DAF Train 1 Skimmer Speed Controller	17805-PR-PID-002	1 of 3	New	Soft	PLC	Controller - VFD Controller	-	-	Ethernet	-	-	02-LCP-001	02-SKM-111 VFD	VFD Supplied and Installed by Others
B	-	02-H-111	DAF Train 1 Skimmer	02-SI-111	DAF Train 1 Skimmer Speed Feedback	17805-PR-PID-002	1 of 3	New	Soft	PLC	Motor - Indication - Speed	-	-	Ethernet	-	-	02-LCP-001	02-SKM-111 VFD	VFD Supplied and Installed by Others
B	-	02-H-111	DAF Train 1 Skimmer	02-UI-111	DAF Train 1 Skimmer Motor Status Indication	17805-PR-PID-002	1 of 3	New	Soft	PLC	Motor - Indication - Status	-	-	Ethernet	-	-	02-LCP-001	02-SKM-111 VFD	VFD Supplied and Installed by Others
B	-	02-H-111	DAF Train 1 Skimmer	02-UA-111	DAF Train 1 Skimmer Motor Fault Alarm	17805-PR-PID-002	1 of 3	New	Soft	PLC	Motor - Alarm - Fault	-	-	Ethernet	-	-	02-LCP-001	02-SKM-111 VFD	VFD Supplied and Installed by Others
B	02-LIT-119	02-L-119	DAF Train 1 Effluent Chamber	02-LIT-119	DAF Train 1 Effluent Chamber Level Transmitter	17805-PR-PID-002	1 of 3	New	AI	PLC	Level - Transmitter - Open Path Radar	-	24 VDC	4-20 mA	-	-	Field	02-LCP-001	
B	-	02-L-119	DAF Train 1 Effluent Chamber	02-LI-119	DAF Train 1 Effluent Chamber Level Indication	17805-PR-PID-002	1 of 3	New	Soft	PLC	Level - Indication	-	-	-	-	-	02-LCP-001	-	
B	-	02-L-119	DAF Train 1 Effluent Chamber	02-LAL-119	DAF Train 1 Effluent Chamber Level Alarm Low	17805-PR-PID-002	1 of 3	New	Soft	PLC	Level - Alarm High	-	-	-	-	-	02-LCP-001	-	
B	-	02-X-204	DAF Train 2 Raw Water Inlet	02-XV-204	DAF Train 2 Raw Water Inlet Valve	17805-PR-PID-002	2 of 3	New	-	-	Butterfly Valve	-	-	-	-	-	Field	-	
B	02-XV-204	02-X-204	DAF Train 2 Raw Water Inlet	02-XY-204	DAF Train 2 Raw Water Inlet Valve Actuator	17805-PR-PID-002	2 of 3	New	-	-	Valve - Control - Actuator - Electric	120 VAC	-	-	0.45kW	Yes	Field	02-LCP-001	
B	02-LCP-001	02-X-204	DAF Train 2 Raw Water Inlet	02-XHS-204A	DAF Train 2 Raw Water Inlet Valve HOA Switch - Auto	17805-PR-PID-002	2 of 3	New	DI	PLC	Switch - Panel Mounted HOA	-	24 VDC	-	-	No	02-LCP-001	02-LCP-001	
B	-	02-X-204	DAF Train 2 Raw Water Inlet	02-XHS-204B	DAF Train 2 Raw Water Inlet Valve HOA Switch - Hand	17805-PR-PID-002	2 of 3	New	DI	PLC	Switch - Panel Mounted HOA	-	24 VDC	-	-	No	02-LCP-001	02-LCP-001	
B	-	02-X-204	DAF Train 2 Raw Water Inlet	02-XHI-204	DAF Train 2 Raw Water Inlet Valve HOA Switch - Hand/Auto Indication	17805-PR-PID-002	2 of 3	New	Soft	PLC	Switch - Indication - Position	-	-	-	-	-	02-LCP-001	-	
B	02-XV-204	02-X-204	DAF Train 2 Raw Water Inlet	02-XC-204	DAF Train 2 Raw Water Inlet Valve Command Open/Closed	17805-PR-PID-002	2 of 3	New	DO	PLC	Controller - Valve Position Output	-	24 VDC	-	-	No	02-LCP-001	Field	De-energize to close
B	02-XV-204	02-X-204	DAF Train 2 Raw Water Inlet	02-XSC-204	DAF Train 2 Raw Water Inlet Valve Position Switch Closed	17805-PR-PID-002	2 of 3	New	DI	PLC	Valve - Switch - Position	-	24 VDC	-	-	No	Field	02-LCP-001	
B	-	02-X-204	DAF Train 2 Raw Water Inlet	02-XIC-204	DAF Train 2 Raw Water Inlet Valve Position Indication Closed	17805-PR-PID-002	2 of 3	New	Soft	PLC	Valve - Indication - Position	-	-	-	-	-	02-LCP-001	-	
B	02-XV-204	02-X-204	DAF Train 2 Raw Water Inlet	02-XSO-204	DAF Train 2 Raw Water Inlet Valve Position Switch Open	17805-PR-PID-002	2 of 3	New	DI	PLC	Valve - Switch - Position	-	24 VDC	-	-	No	Field	02-LCP-001	
B	-	02-X-204	DAF Train 2 Raw Water Inlet	02-XIO-204	DAF Train 2 Raw Water Inlet Valve Position Indication Open	17805-PR-PID-002	2 of 3	New	Soft	PLC	Valve - Indication - Position	-	-	-	-	-	02-LCP-001	-	

INSTRUMENT INDEX

Rev	Equipment No	Loop Number	Loop Service	Tag Number	Tag Description	P&ID	Sheet	Status	IO Type Name	System	Instrument Type	Power Voltage	Control Voltage	Signal	Power / Current	UPS Powered	Location	Wired To/From	Notes
B	-	02-X-204	DAF Train 2 Raw Water Inlet	02-XAD-204	DAF Train 2 Raw Water Inlet Valve Position Discrepancy Alarm	17805-PR-PID-002	2 of 3	New	Soft	PLC	Valve - Alarm - Discrepancy	-	-	-	-	-	02-LCP-001	02-LCP-001	
B	02-XV-204	02-X-204	DAF Train 2 Raw Water Inlet	02-XS-204	DAF Train 2 Raw Water Inlet Valve Fault Signal	17805-PR-PID-002	2 of 3	New	DI	PLC	Valve - Actuator Fault Output	-	24 VDC	-	-	No	Field	02-LCP-001	
B	-	02-X-204	DAF Train 2 Raw Water Inlet	02-XA-204	DAF Train 2 Raw Water Inlet Valve Fault Alarm	17805-PR-PID-002	2 of 3	New	Soft	PLC	Valve - Alarm - Fault	-	-	-	-	-	02-LCP-001	-	
B	02-XV-204	02-X-204	DAF Train 2 Raw Water Inlet	02-XHS-204C	DAF Train 2 Raw Water Inlet Valve Local/Remote Switch	17805-PR-PID-002	2 of 3	New	DI	PLC	Valve - Switch - Local/Remote	-	24 VDC	-	-	No	Field	02-LCP-001	
B	-	02-X-204	DAF Train 2 Raw Water Inlet	02-XAR-204	DAF Train 2 Raw Water Inlet Valve Remote Indication	17805-PR-PID-002	2 of 3	New	Soft	PLC	Valve - Indication - Remote	-	-	-	-	-	02-LCP-001	-	
B	02-MX-203	02-H-203	DAF Train 2 Stage 1 Flocculator	02-HS-203A	DAF Train 2 Stage 1 Flocculation Mixer HOA Switch - Auto	17805-PR-PID-002	2 of 3	New	Soft	PLC	Switch - Local Mounted HOA	-	-	Ethernet	-	-	FIELD	Client	HOA Switch installed in field near motor. Wired to customer system.
B	02-MX-203	02-H-203	DAF Train 2 Stage 1 Flocculator	02-HS-203B	DAF Train 2 Stage 1 Flocculation Mixer HOA Switch - Hand	17805-PR-PID-002	2 of 3	New	Soft	PLC	Switch - Local Mounted HOA	-	-	Ethernet	-	-	FIELD	Client	HOA Switch installed in field near motor. Wired to customer system.
B	-	02-H-203	DAF Train 2 Stage 1 Flocculator	02-HI-203	DAF Train 2 Stage 1 Flocculation Mixer Hand/Auto Indication	17805-PR-PID-002	2 of 3	New	Soft	PLC	Switch - Indication - Position	-	-	-	-	-	02-LCP-001	-	
B	-	02-H-203	DAF Train 2 Stage 1 Flocculator	02-HC-203	DAF Train 2 Stage 1 Flocculation Mixer Speed Controller	17805-PR-PID-002	2 of 3	New	Soft	PLC	Controller - VFD Controller	-	-	Ethernet	-	-	02-LCP-001	02-MX-203 VFD	VFD Supplied and Installed by Others
B	-	02-H-203	DAF Train 2 Stage 1 Flocculator	02-SI-203	DAF Train 2 Stage 1 Flocculation Mixer Speed Feedback	17805-PR-PID-002	2 of 3	New	Soft	PLC	Motor - Indication - Speed	-	-	Ethernet	-	-	02-LCP-001	02-MX-203 VFD	VFD Supplied and Installed by Others
B	-	02-H-203	DAF Train 2 Stage 1 Flocculator	02-UI-203	DAF Train 2 Stage 1 Flocculation Mixer Motor Status Indication	17805-PR-PID-002	2 of 3	New	Soft	PLC	Motor - Indication - Status	-	-	Ethernet	-	-	02-LCP-001	02-MX-203 VFD	VFD Supplied and Installed by Others
B	-	02-H-203	DAF Train 2 Stage 1 Flocculator	02-UA-203	DAF Train 2 Stage 1 Flocculation Mixer Motor Fault Alarm	17805-PR-PID-002	2 of 3	New	Soft	PLC	Motor - Alarm - Fault	-	-	Ethernet	-	-	02-LCP-001	02-MX-203 VFD	VFD Supplied and Installed by Others
B	02-MX-205	02-H-205	DAF Train 2 Stage 2 Flocculator	02-HS-205A	DAF Train 2 Stage 2 Flocculation Mixer HOA Switch - Auto	17805-PR-PID-002	2 of 3	New	Soft	PLC	Switch - Local Mounted HOA	-	-	Ethernet	-	-	FIELD	Client	HOA Switch installed in field near motor. Wired to customer system.
B	02-MX-205	02-H-205	DAF Train 2 Stage 2 Flocculator	02-HS-205B	DAF Train 2 Stage 2 Flocculation Mixer HOA Switch - Hand	17805-PR-PID-002	2 of 3	New	Soft	PLC	Switch - Local Mounted HOA	-	-	Ethernet	-	-	FIELD	Client	HOA Switch installed in field near motor. Wired to customer system.
B	-	02-H-205	DAF Train 2 Stage 2 Flocculator	02-HI-205	DAF Train 2 Stage 2 Flocculation Mixer Hand/Auto Indication	17805-PR-PID-002	2 of 3	New	Soft	PLC	Switch - Indication - Position	-	-	-	-	-	02-LCP-001	-	
B	-	02-H-205	DAF Train 2 Stage 2 Flocculator	02-HC-205	DAF Train 2 Stage 2 Flocculation Mixer Speed Controller	17805-PR-PID-002	2 of 3	New	Soft	PLC	Controller - VFD Controller	-	-	Ethernet	-	-	02-LCP-001	02-MX-205 VFD	VFD Supplied and Installed by Others
B	-	02-H-205	DAF Train 2 Stage 2 Flocculator	02-SI-205	DAF Train 2 Stage 2 Flocculation Mixer Speed Feedback	17805-PR-PID-002	2 of 3	New	Soft	PLC	Motor - Indication - Speed	-	-	Ethernet	-	-	02-LCP-001	02-MX-205 VFD	VFD Supplied and Installed by Others
B	-	02-H-205	DAF Train 2 Stage 2 Flocculator	02-UI-205	DAF Train 2 Stage 2 Flocculation Mixer Motor Status Indication	17805-PR-PID-002	2 of 3	New	Soft	PLC	Motor - Indication - Status	-	-	Ethernet	-	-	02-LCP-001	02-MX-205 VFD	VFD Supplied and Installed by Others
B	-	02-H-205	DAF Train 2 Stage 2 Flocculator	02-UA-205	DAF Train 2 Stage 2 Flocculation Mixer Motor Fault Alarm	17805-PR-PID-002	2 of 3	New	Soft	PLC	Motor - Alarm - Fault	-	-	Ethernet	-	-	02-LCP-001	02-MX-205 VFD	VFD Supplied and Installed by Others
B	02-LCP-001	02-U-214	DAF Train 2 Trough Spray	02-UHS-214A	DAF Train 2 Trough Spray Valve Auto	17805-PR-PID-002	2 of 3	New	DI	PLC	Switch - Panel Mounted HOA	-	24 VDC	-	-	-	02-LCP-001	02-LCP-001	
B	02-LCP-001	02-U-214	DAF Train 2 Trough Spray	02-UHS-214B	DAF Train 2 Trough Spray Valve Hand	17805-PR-PID-002	2 of 3	New	DI	PLC	Switch - Panel Mounted HOA	-	24 VDC	-	-	-	02-LCP-001	02-LCP-001	
B	-	02-U-214	DAF Train 2 Trough Spray	02-UHI-214	DAF Train 2 Trough Spray Valve Hand/Auto Indication	17805-PR-PID-002	2 of 3	New	Soft	PLC	Switch - Indication - Position	-	-	-	-	-	02-LCP-001	-	
B	-	02-U-214	DAF Train 2 Trough Spray	02-UV-214	DAF Train 2 Trough Spray Valve	17805-PR-PID-002	2 of 3	New	-	-	Valve - 2-Way Solenoid	120 VAC	-	-	6 W	-	Field	-	
B	-	02-U-214	DAF Train 2 Trough Spray	02-UC-214	DAF Train 2 Trough Spray Valve Position Command	17805-PR-PID-002	2 of 3	New	DO	PLC	Controller - Valve Position Output	-	24 VDC	-	-	-	02-LCP-001	Field	
B	02-LCP-001	02-H-211	DAF Train 2 Skimmer	02-HS-211A	DAF Train 2 Skimmer HOA Switch Auto	17805-PR-PID-002	2 of 3	New	Soft	PLC	Switch - Local Mounted HOA	-	-	Ethernet	-	-	FIELD	Client	HOA Switch installed in field near motor. Wired to customer system.
B	02-LCP-001	02-H-211	DAF Train 2 Skimmer	02-HS-211B	DAF Train 2 Skimmer HOA Switch Hand	17805-PR-PID-002	2 of 3	New	Soft	PLC	Switch - Local Mounted HOA	-	-	Ethernet	-	-	FIELD	Client	HOA Switch installed in field near motor. Wired to customer system.
B	-	02-H-211	DAF Train 2 Skimmer	02-HI-211	DAF Train 2 Skimmer Hand/Auto Indication	17805-PR-PID-002	2 of 3	New	Soft	PLC	Switch - Indication - Position	-	-	-	-	-	02-LCP-001	-	
B	-	02-H-211	DAF Train 2 Skimmer	02-HC-211	DAF Train 2 Skimmer Speed Controller	17805-PR-PID-002	2 of 3	New	Soft	PLC	Controller - VFD Controller	-	-	Ethernet	-	-	02-LCP-001	02-SKM-211 VFD	VFD Supplied and Installed by Others
B	-	02-H-211	DAF Train 2 Skimmer	02-SI-211	DAF Train 2 Skimmer Speed Feedback	17805-PR-PID-002	2 of 3	New	Soft	PLC	Motor - Indication - Speed	-	-	Ethernet	-	-	02-LCP-001	02-SKM-211 VFD	VFD Supplied and Installed by Others
B	-	02-H-211	DAF Train 2 Skimmer	02-UI-211	DAF Train 2 Skimmer Motor Status Indication	17805-PR-PID-002	2 of 3	New	Soft	PLC	Motor - Indication - Status	-	-	Ethernet	-	-	02-LCP-001	02-SKM-211 VFD	VFD Supplied and Installed by Others
B	-	02-H-211	DAF Train 2 Skimmer	02-UA-211	DAF Train 2 Skimmer Motor Fault Alarm	17805-PR-PID-002	2 of 3	New	Soft	PLC	Motor - Alarm - Fault	-	-	Ethernet	-	-	02-LCP-001	02-SKM-211 VFD	VFD Supplied and Installed by Others
B	02-LIT-219	02-L-219	DAF Train 2 Effluent Chamber	02-LIT-219	DAF Train 2 Effluent Chamber Level Transmitter	17805-PR-PID-002	2 of 3	New	AI	PLC	Level - Transmitter - Open Path Radar	-	24 VDC	4-20 mA	-	-	Field	02-LCP-001	
B	-	02-L-219	DAF Train 2 Effluent Chamber	02-LI-219	DAF Train 2 Effluent Chamber Level Indication	17805-PR-PID-002	2 of 3	New	Soft	PLC	Level - Indication	-	-	-	-	-	02-LCP-001	-	
B	-	02-L-219	DAF Train 2 Effluent Chamber	02-LAL-219	DAF Train 2 Effluent Chamber Level Alarm Low	17805-PR-PID-002	2 of 3	New	Soft	PLC	Level - Alarm High	-	-	-	-	-	02-LCP-001	-	
B	-	02-X-304	DAF Train 3 Raw Water Inlet	02-XV-304	DAF Train 3 Raw Water Inlet Valve	17805-PR-PID-002	3 of 3	New	-	-	Butterfly Valve	-	-	-	-	-	Field	-	
B	02-XV-304	02-X-304	DAF Train 3 Raw Water Inlet	02-XY-304	DAF Train 3 Raw Water Inlet Valve Actuator	17805-PR-PID-002	3 of 3	New	-	-	Valve - Control - Actuator - Electric	120 VAC	-	-	0.45kW	Yes	Field	02-LCP-001	
B	02-LCP-001	02-X-304	DAF Train 3 Raw Water Inlet	02-XHS-304A	DAF Train 3 Raw Water Inlet Valve HOA Switch - Auto	17805-PR-PID-002	3 of 3	New	DI	PLC	Switch - Panel Mounted HOA	-	24 VDC	-	-	No	02-LCP-001	02-LCP-001	
B	-	02-X-304	DAF Train 3 Raw Water Inlet	02-XHS-304B	DAF Train 3 Raw Water Inlet Valve HOA Switch - Hand	17805-PR-PID-002	3 of 3	New	DI	PLC	Switch - Panel Mounted HOA	-	24 VDC	-	-	No	02-LCP-001	02-LCP-001	
B	-	02-X-304	DAF Train 3 Raw Water Inlet	02-XHI-304	DAF Train 3 Raw Water Inlet Valve HOA Switch - Hand/Auto Indication	17805-PR-PID-002	3 of 3	New	Soft	PLC	Switch - Indication - Position	-	-	-	-	-	02-LCP-001	-	
B	02-XV-304	02-X-304	DAF Train 3 Raw Water Inlet	02-XC-304	DAF Train 3 Raw Water Inlet Valve Command Open/Closed	17805-PR-PID-002	3 of 3	New	DO	PLC	Controller - Valve Position Output	-	24 VDC	-	-	No	02-LCP-001	Field	De-energize to close
B	02-XV-304	02-X-304	DAF Train 3 Raw Water Inlet	02-XSC-304	DAF Train 3 Raw Water Inlet Valve Position Switch Closed	17805-PR-PID-002	3 of 3	New	DI	PLC	Valve - Switch - Position	-	24 VDC	-	-	No	Field	02-LCP-001	
B	-	02-X-304	DAF Train 3 Raw Water Inlet	02-XIC-304	DAF Train 3 Raw Water Inlet Valve Position Indication Closed	17805-PR-PID-002	3 of 3	New	Soft	PLC	Valve - Indication - Position	-	-	-	-	-	02-LCP-001	-	
B	02-XV-304	02-X-304	DAF Train 3 Raw Water Inlet	02-XSO-304	DAF Train 3 Raw Water Inlet Valve Position Switch Open	17805-PR-PID-002	3 of 3	New	DI	PLC	Valve - Switch - Position	-	24 VDC	-	-	No	Field	02-LCP-001	
B	-	02-X-304	DAF Train 3 Raw Water Inlet	02-XIO-304	DAF Train 3 Raw Water Inlet Valve Position Indication Open	17805-PR-PID-002	3 of 3	New	Soft	PLC	Valve - Indication - Position	-	-	-	-	-	02-LCP-001	-	
B	-	02-X-304	DAF Train 3 Raw Water Inlet	02-XAD-304	DAF Train 3 Raw Water Inlet Valve Position Discrepancy Alarm	17805-PR-PID-002	3 of 3	New	Soft	PLC	Valve - Alarm - Discrepancy	-	-	-	-	-	02-LCP-001	02-LCP-001	
B	02-XV-304	02-X-304	DAF Train 3 Raw Water Inlet	02-XS-304	DAF Train 3 Raw Water Inlet Valve Fault Signal	17805-PR-PID-002	3 of 3	New	DI	PLC	Valve - Actuator Fault Output	-	24 VDC	-	-	No	Field	02-LCP-001	
B	-	02-X-304	DAF Train 3 Raw Water Inlet	02-XA-304	DAF Train 3 Raw Water Inlet Valve Fault Alarm	17805-PR-PID-002	3 of 3	New	Soft	PLC	Valve - Alarm - Fault	-	-	-	-	-	02-LCP-001	-	
B	02-XV-304	02-X-304	DAF Train 3 Raw Water Inlet	02-XHS-304C	DAF Train 3 Raw Water Inlet Valve Local/Remote Switch	17805-PR-PID-002	3 of 3	New	DI	PLC	Valve - Switch - Local/Remote	-	24 VDC	-	-	No	Field	02-LCP-001	
B	-	02-X-304	DAF Train 3 Raw Water Inlet	02-XAR-304	DAF Train 3 Raw Water Inlet Valve Remote Indication	17805-PR-PID-002	3 of 3	New	Soft	PLC	Valve - Indication - Remote	-	-	-	-	-	02-LCP-001	-	
B	02-MX-303	02-H-303	DAF Train 3 Stage 1 Flocculator	02-HS-303A	DAF Train 3 Stage 1 Flocculation Mixer HOA Switch - Auto	17805-PR-PID-002	3 of 3	New	Soft	PLC	Switch - Local Mounted HOA	-	-	Ethernet	-	-	FIELD	Client	HOA Switch installed in field near motor. Wired to customer system.
B	02-MX-303	02-H-303	DAF Train 3 Stage 1 Flocculator	02-HS-303B	DAF Train 3 Stage 1 Flocculation Mixer HOA Switch - Hand	17805-PR-PID-002	3 of 3	New	Soft	PLC	Switch - Local Mounted HOA	-	-	Ethernet	-	-	FIELD	Client	HOA Switch installed in field near motor. Wired to customer system.
B	-	02-H-303	DAF Train 3 Stage 1 Flocculator	02-HI-303	DAF Train 3 Stage 1 Flocculation Mixer Hand/Auto Indication	17805-PR-PID-002	3 of 3	New	Soft	PLC	Switch - Indication - Position	-	-	-	-	-	02-LCP-001	-	
B	-	02-H-303	DAF Train 3 Stage 1 Flocculator	02-HC-303	DAF Train 3 Stage 1 Flocculation Mixer Speed Controller	17805-PR-PID-002	3 of 3	New	Soft	PLC	Controller - VFD Controller	-	-	Ethernet	-	-	02-LCP-001	02-MX-303 VFD	VFD Supplied and Installed by Others
B	-	02-H-303	DAF Train 3 Stage 1 Flocculator	02-SI-303	DAF Train 3 Stage 1 Flocculation Mixer Speed Feedback	17805-PR-PID-002	3 of 3	New	Soft	PLC	Motor - Indication - Speed	-	-	Ethernet	-	-	02-LCP-001	02-MX-303 VFD	VFD Supplied and Installed by Others
B	-	02-H-303	DAF Train 3 Stage 1 Flocculator	02-UI-303	DAF Train 3 Stage 1 Flocculation Mixer Motor Status Indication	17805-PR-PID-002	3 of 3	New	Soft	PLC	Motor - Indication - Status	-	-	Ethernet	-	-	02-LCP-001	02-MX-303 VFD	VFD Supplied and Installed by Others
B	-	02-H-303	DAF Train 3 Stage 1 Flocculator	02-UA-303	DAF Train 3 Stage 1 Flocculation Mixer Motor Fault Alarm	17805-PR-PID-002	3 of 3	New	Soft	PLC	Motor - Alarm - Fault	-	-	Ethernet	-	-	02-LCP-001	02-MX-303 VFD	VFD Supplied and Installed by Others
B	02-MX-305	02-H-305	DAF Train 3 Stage 2 Flocculator	02-HS-305A	DAF Train 3 Stage 2 Flocculation Mixer HOA Switch - Auto	17805-PR-PID-002	3 of 3	New	Soft	PLC	Switch - Local Mounted HOA	-	-	Ethernet	-	-	FIELD	Client	HOA Switch installed in field near motor. Wired to customer system.
B	02-MX-305	02-H-305	DAF Train 3 Stage 2 Flocculator	02-HS-305B	DAF Train 3 Stage 2 Flocculation Mixer HOA Switch - Hand	17805-PR-PID-002	3 of 3	New	Soft	PLC	Switch - Local Mounted HOA	-	-	Ethernet	-	-	FIELD	Client	HOA Switch installed in field near motor. Wired to customer system.
B	-	02-H-305	DAF Train 3 Stage 2 Flocculator	02-HI-305	DAF Train 3 Stage 2 Flocculation Mixer Hand/Auto Indication	17805-PR-PID-002	3 of 3	New	Soft	PLC	Switch - Indication - Position	-	-	-	-	-	02-LCP-001	-	
B	-	02-H-305	DAF Train 3 Stage 2 Flocculator	02-HC-305	DAF Train 3 Stage 2 Flocculation Mixer Speed Controller	17805-PR-PID-002	3 of 3	New	Soft	PLC	Controller - VFD Controller	-	-	Ethernet	-	-	02-LCP-001	02-MX-305 VFD	VFD Supplied and Installed by Others
B	-	02-H-305	DAF Train 3 Stage 2 Flocculator	02-SI-305	DAF Train 3 Stage 2 Flocculation Mixer Speed Feedback	17805-PR-PID-002	3 of 3	New	Soft	PLC	Motor - Indication - Speed	-	-	Ethernet	-	-	02-LCP-001	02-MX-305 VFD	VFD Supplied and Installed by Others
B	-	02-H-305	DAF Train 3 Stage 2 Flocculator	02-UI-305	DAF Train 3 Stage 2 Flocculation Mixer Motor Status Indication	17805-PR-PID-002	3 of 3	New	Soft	PLC	Motor - Indication - Status	-	-	Ethernet	-	-	02-LCP-001	02-MX-305 VFD	VFD Supplied and Installed by Others
B	-	02-H-305	DAF Train 3 Stage 2 Flocculator	02-UA-305	DAF Train 3 Stage 2 Flocculation Mixer Motor Fault Alarm	17805-PR-PID-002	3 of 3	New	Soft	PLC	Motor - Alarm - Fault	-	-	Ethernet	-	-	02-LCP-001	02-MX-305 VFD	VFD Supplied and Installed by Others
B	02-LCP-001	02-U-314	DAF Train 3 Trough Spray	02-UHS-314A	DAF Train 3 Trough Spray Valve Auto	17805-PR-PID-002	3 of 3	New	DI	PLC	Switch - Panel Mounted HOA	-	24 VDC	-	-	-	02-LCP-001	02-LCP-001	
B	02-LCP-001	02-U-314	DAF Train 3 Trough Spray	02-UHS-314B	DAF Train 3 Trough Spray Valve Hand	17805-PR-PID-002	3 of 3	New	DI	PLC	Switch - Panel Mounted HOA	-	24 VDC	-	-	-	02-LCP-001	02-LCP-001	
B	-	02-U-314	DAF Train 3 Trough Spray	02-UHI-314	DAF Train 3 Trough Spray Valve Hand/Auto Indication	17805-PR-PID-002	3 of 3	New	Soft	PLC	Switch - Indication - Position	-	-	-	-	-	02-LCP-001	-	
B	-	02-U-314	DAF Train 3 Trough Spray	02-UV-314	DAF Train 3 Trough Spray Valve	17805-PR-PID-002	3 of 3	New	-	-	Valve - 2-Way Solenoid	120 VAC	-	-	6 W	-	Field	-	
B	-	02-U-314	DAF Train 3 Trough Spray	02-UC-314	DAF Train 3 Trough Spray Valve Position Command	17805-PR-PID-002	3 of 3	New	DO	PLC	Controller - Valve Position Output	-	24 VDC	-	-	-	02-LCP-001	Field	
B	02-LCP-001	02-H-311	DAF Train 3 Skimmer	02-HS-311A	DAF Train 3 Skimmer HOA Switch Auto	17805-PR-PID-002	3 of 3	New	Soft	PLC	Switch - Local Mounted HOA	-	-	Ethernet	-	-	FIELD	Client	HOA Switch installed in field near motor. Wired to customer system.
B	02-LCP-001	02-H-311	DAF Train 3 Skimmer	02-HS-311B	DAF Train 3 Skimmer HOA Switch Hand	17805-PR-PID-002	3 of 3	New	Soft	PLC	Switch - Local Mounted HOA	-	-	Ethernet	-	-	FIELD	Client	HOA Switch installed in field near motor. Wired to customer system.
B	-	02-H-311	DAF Train 3 Skimmer	02-HI-311	DAF Train 3 Skimmer Hand/Auto Indication	17805-PR-PID-002	3 of 3	New	Soft	PLC	Switch - Indication - Position	-	-	-	-	-	02-LCP-001	-	
B	-	02-H-311	DAF Train 3 Skimmer	02-HC-311	DAF Train 3 Skimmer Speed Controller	17805-PR-PID-002	3 of 3	New	Soft	PLC	Controller - VFD Controller	-	-	Ethernet	-	-	02-LCP-001	02-SKM-311 VFD	VFD Supplied and Installed by Others
B	-	02-H-311	DAF Train 3 Skimmer	02-SI-311	DAF Train 3 Skimmer Speed Feedback	17805-PR-PID-002	3 of 3	New	Soft	PLC	Motor - Indication - Speed	-	-	Ethernet	-	-	02-LCP-001	02-SKM-311 VFD	VFD Supplied and Installed by Others
B	-	02-H-311	DAF Train 3 Skimmer	02-UI-311	DAF Train 3 Skimmer Motor Status Indication	17805-PR-PID-002	3 of 3	New	Soft	PLC	Motor - Indication - Status	-	-	Ethernet	-	-	02-LCP-001	02-SKM-311 VFD	VFD Supplied and Installed by Others
B	-	02-H-311	DAF Train 3 Skimmer	02-UA-311	DAF Train 3 Skimmer Motor Fault Alarm	17805-PR-PID-002	3 of 3	New	Soft	PLC	Motor - Alarm - Fault	-	-	Ethernet	-	-	02-LCP-001	02-SKM-311 VFD	VFD Supplied and Installed by Others
B	02-LIT-319	02-L-319	DAF Train 3 Effluent Chamber	02-LIT-319	DAF Train 3 Effluent Chamber Level Transmitter	17805-PR-PID-002	3 of 3	New	AI	PLC	Level - Transmitter - Open Path Radar	-	24 VDC	4-20 mA	-	-	Field	02-LCP-001	
B	-	02-L-319	DAF Train 3 Effluent Chamber	02-LI-319	DAF Train 3 Effluent Chamber Level Indication	17805-PR-PID-002	3 of 3	New	Soft	PLC	Level - Indication	-	-	-	-	-	02-LCP-001	-	
B	-	02-L-319	DAF Train 3 Effluent Chamber	02-LAL-319	DAF Train 3 Effluent Chamber Level Alarm Low	17805-PR-PID-002	3 of 3	New	Soft	PLC	Level - Alarm High	-	-	-	-	-	02-LCP-001	-	
B	-	02-P-121	DAF Train 1 Recycle Pump	02-PI-121	DAF Train 1 Recycle Pump Suction Pressure	17805-PR-PID-003	1 of 3	New	-	-	Pressure - Gauge	-	-	-	-	-	Field	-	
B	02-PIT-122	02-P-122	DAF Train 1 Recycle Pump	02-PT-122	DAF Train 1 Recycle Pump Suction Pressure Transmitter	17805-PR-PID-003	1 of 3	New	AI	PLC	Pressure - Transmitter	-	24 VDC	4-20 mA	-	-	Field	02-LCP-001	
B	-	02-P-122	DAF Train 1 Recycle Pump	02-PI-122	DAF Train 1 Recycle Pump Suction Pressure Indication	17805-PR-PID-003	1 of 3	New	Soft	PLC	Pressure - Indication	-	-	-	-	-	02-LCP-001	-	
B	02-LCP-001	02-L-120	DAF Train 1 Recycle Pump	02-HS-120A	DAF Train 1 Recycle Pump HOA Switch - Auto	17805-PR-PID-003	1 of 3	New	Soft	PLC	Switch - Local Mounted HOA	-	-	Ethernet	-	-	FIELD	Client	HOA Switch installed in field near motor. Wired to customer system.
B	02-LCP-001	02-L-120	DAF Train 1 Recycle Pump	02-HS-120B	DAF Train 1 Recycle Pump HOA Switch - Hand	17805-PR-PID-003	1 of 3	New	Soft	PLC	Switch - Local Mounted HOA	-	-	Ethernet	-	-	FIELD	Client	HOA Switch installed in field near motor. Wired to customer system.
B	-	02-L-120	DAF Train 1 Recycle Pump	02-HI-120	DAF Train 1 Recycle Pump Hand/Auto Indication	17805-PR-PID-003	1 of 3	New	Soft	PLC	Switch - Indication - Position	-	-	-	-	-	02-LCP-001	-	
B	-	02-L-120	DAF Train 1 Recycle Pump	02-LC-120	DAF Train 1 Recycle Pump Speed Controller	17805-PR-PID-003	1 of 3	New	Soft	PLC	Controller - VFD Controller	-	-	Ethernet	-	-	02-LCP-001	02-P-120 VFD	VFD Supplied and Installed by Others
B	-	02-L-120	DAF Train 1 Recycle Pump	02-SI-120	DAF Train 1 Recycle Pump Speed Feedback	17805-PR-PID-003	1 of 3	New	Soft	PLC	Motor - Indication - Speed	-	-	Ethernet	-	-	02-LCP-001	02-P-120 VFD	VFD Supplied and Installed by Others
B	-	02-L-120	DAF Train 1 Recycle Pump	02-UI-120	DAF Train 1 Recycle Pump Status Indication	17805-PR-PID-003	1 of 3	New	Soft	PLC	Motor - Indication - Status	-	-	Ethernet	-	-	02-LCP-001	02-P-120 VFD	VFD Supplied and Installed by Others
B	-	02-L-120	DAF Train 1 Recycle Pump	02-UA-120	DAF Train 1 Recycle Pump Fault Alarm	17805-PR-PID-003	1 of 3	New	Soft	PLC	Motor - Alarm - Fault	-	-	Ethernet	-	-	02-LCP-001	02-P-120 VFD	VFD Supplied and Installed by Others
B	-	02-P-123	DAF Train 1 Recycle Pump	02-PI-123	DAF Train 1 Recycle Pump Discharge Pressure	17805-PR-PID-003	1 of 3	New	-	-	Pressure - Gauge	-	-	-	-	-	Field	-	
B	02-PIT-124	02-P-124	DAF Train 1 Recycle Pump	02-PT-124	DAF Train 1 Recycle Pump Discharge Pressure Transmitter	17805-PR-PID-003	1 of 3	New	AI	PLC	Pressure - Transmitter	-	24 VDC	4-20 mA	-	-	Field	02-LCP-001	
B	-	02-P-124	DAF Train 1 Recycle Pump	02-PI-124	DAF Train 1 Recycle Pump Discharge Pressure Indication	17805-PR-PID-003	1 of 3	New	Soft	PLC	Pressure - Indication	-	-	-	-	-	02-LCP-001	-	

INSTRUMENT INDEX

Rev	Equipment No	Loop Number	Loop Service	Tag Number	Tag Description	P&ID	Sheet	Status	IO Type Name	System	Instrument Type	Power Voltage	Control Voltage	Signal	Power / Current	UPS Powered	Location	Wired To/From	Notes
B	-	02-P-124	DAF Train 1 Recycle Pump	02-PAHH-124	DAF Train 1 Recycle Pump Discharge Pressure Alarm High High	17805-PR-PID-003	1 of 3	New	Soft	PLC	Pressure - Alarm High High	-	-	-	-	-	02-LCP-001	-	
B	02-FIT-126	02-F-126	DAF Train 1 Recycle Pump	02-FIT-126	DAF Train 1 Recycle Pump Discharge Flow Transmitter	17805-PR-PID-003	1 of 3	New	AI	PLC	Flow - Electromagnetic Flowmeter	120 VAC	24 VDC	4-20 mA	30VA/8W	-	Field	02-LCP-001	
B	-	02-F-126	DAF Train 1 Recycle Pump	02-FI-126	DAF Train 1 Recycle Pump Discharge Flow Indication	17805-PR-PID-003	1 of 3	New	Soft	PLC	Flow - Indication	-	-	-	-	-	02-LCP-001	-	
B	-	02-F-126	DAF Train 1 Recycle Pump	02-FAL-126	DAF Train 1 Recycle Pump Discharge Flow Alarm Low	17805-PR-PID-003	1 of 3	New	Soft	PLC	Flow - Alarm High high	-	-	-	-	-	02-LCP-001	-	
B	02-LIT-128	02-L-128	DAF Train 1 Saturator	02-LIT-128	DAF Train 1 Saturator Tank Level Transmitter	17805-PR-PID-003	1 of 3	New	AI	PLC	Level - Transmitter -Differential Pressure	-	24 VDC	4-20 mA	-	-	Field	02-LCP-001	
B	-	02-L-128	DAF Train 1 Saturator	02-LI-128	DAF Train 1 Saturator Tank Level Indication	17805-PR-PID-003	1 of 3	New	Soft	PLC	Level - Indication	-	-	-	-	-	02-LCP-001	-	
B	-	02-L-128	DAF Train 1 Saturator	02-LAHH-128	DAF Train 1 Saturator Tank Level Alarm High High	17805-PR-PID-003	1 of 3	New	Soft	PLC	Level - Alarm High High	-	-	-	-	-	02-LCP-001	-	
B		02-L-128	DAF Train 1 Saturator	02-LAH-128	DAF Train 1 Saturator Tank Level Alarm High	17805-PR-PID-003	1 of 3	New	Soft	PLC	Level - Alarm High	-	-	-	-	-	02-LCP-001	-	
B		02-L-128	DAF Train 1 Saturator	02-LAL-128	DAF Train 1 Saturator Tank Level Alarm Low	17805-PR-PID-003	1 of 3	New	Soft	PLC	Level - Alarm Low	-	-	-	-	-	02-LCP-001	-	
B		02-L-128	DAF Train 1 Saturator	02-LALL-128	DAF Train 1 Saturator Tank Level Alarm Low Low	17805-PR-PID-003	1 of 3	New	Soft	PLC	Level - Alarm Low Low	-	-	-	-	-	02-LCP-001	-	
B		02-L-129	DAF Train 1 Saturator	02-LI-129	DAF Train 1 Saturator Tank Level Gauge	17805-PR-PID-003	1 of 3	New	-	-	Level - Gauge - Glass	-	-	-	-	-	Field	-	
B	-	02-X-125	DAF Train 1 Saturator	02-XV-125	DAF Train 1 Recycle Return Valve	17805-PR-PID-003	1 of 3	New	-	-	Valve - Butterfly	-	-	-	-	-	Field	-	
B	02-XV-125	02-X-125	DAF Train 1 Saturator	02-XY-125	DAF Train 1 Recycle Return Valve Actuator	17805-PR-PID-003	1 of 3	New	-	-	Valve - Control - Actuator - Electric	120 VAC	-	-	0.43kW	No	Field	02-LCP-001	
B	02-LCP-001	02-X-125	DAF Train 1 Saturator	02-XHS-125A	DAF Train 1 Recycle Return Valve HOA Switch - Auto	17805-PR-PID-003	1 of 3	New	DI	PLC	Switch - Panel Mounted HOA	-	24 VDC	-	-	No	02-LCP-001	02-LCP-001	
B	-	02-X-125	DAF Train 1 Saturator	02-XHS-125B	DAF Train 1 Recycle Return Valve HOA Switch - Hand	17805-PR-PID-003	1 of 3	New	DI	PLC	Switch - Panel Mounted HOA	-	24 VDC	-	-	No	02-LCP-001	02-LCP-001	
B	-	02-X-125	DAF Train 1 Saturator	02-XHI-125	DAF Train 1 Recycle Return Valve HOA Switch - Hand/Auto Indication	17805-PR-PID-003	1 of 3	New	Soft	PLC	Switch - Indication - Position	-	-	-	-	-	02-LCP-001	-	
B	02-XV-125	02-X-125	DAF Train 1 Saturator	02-XC-125	DAF Train 1 Recycle Return Valve Command Position	17805-PR-PID-003	1 of 3	New	AO	PLC	Controller - Valve Position Output	-	24 VDC	4-20 mA	-	No	02-LCP-001	Field	Modulating Valve for Slow Opening and Level Recovery Sequence
B	02-XV-125	02-X-125	DAF Train 1 Saturator	02-XSC-125	DAF Train 1 Recycle Return Valve Position Switch Closed	17805-PR-PID-003	1 of 3	New	DI	PLC	Valve - Switch - Position	-	24 VDC	-	-	No	Field	02-LCP-001	
B	-	02-X-125	DAF Train 1 Saturator	02-XIC-125	DAF Train 1 Recycle Return Valve Position Indication Closed	17805-PR-PID-003	1 of 3	New	Soft	PLC	Valve - Indication - Position	-	-	-	-	-	02-LCP-001	-	
B	02-XV-125	02-X-125	DAF Train 1 Saturator	02-XSO-125	DAF Train 1 Recycle Return Valve Position Switch Open	17805-PR-PID-003	1 of 3	New	DI	PLC	Valve - Switch - Position	-	24 VDC	-	-	No	Field	02-LCP-001	
B	-	02-X-125	DAF Train 1 Saturator	02-XIO-125	DAF Train 1 Recycle Return Valve Position Indication Open	17805-PR-PID-003	1 of 3	New	Soft	PLC	Valve - Indication - Position	-	-	-	-	-	02-LCP-001	-	
B	-	02-X-125	DAF Train 1 Saturator	02-XAD-125	DAF Train 1 Recycle Return Valve Position Discrepancy Alarm	17805-PR-PID-003	1 of 3	New	Soft	PLC	Valve - Alarm - Discrepancy	-	-	-	-	-	02-LCP-001	02-LCP-001	
B	02-XV-125	02-X-125	DAF Train 1 Saturator	02-XS-125	DAF Train 1 Recycle Return Valve Fault Signal	17805-PR-PID-003	1 of 3	New	DI	PLC	Valve - Actuator Fault Output	-	24 VDC	-	-	No	Field	02-LCP-001	
B	-	02-X-125	DAF Train 1 Saturator	02-XA-125	DAF Train 1 Recycle Return Valve Fault Alarm	17805-PR-PID-003	1 of 3	New	Soft	PLC	Valve - Alarm - Fault	-	-	-	-	-	02-LCP-001	-	
B	02-XV-125	02-X-125	DAF Train 1 Saturator	02-XHS-125C	DAF Train 1 Recycle Return Valve Local/Remote Switch	17805-PR-PID-003	1 of 3	New	DI	PLC	Valve - Switch - Local/Remote	-	24 VDC	-	-	No	Field	02-LCP-001	
B	-	02-X-125	DAF Train 1 Saturator	02-XAR-125	DAF Train 1 Recycle Return Valve Remote Indication	17805-PR-PID-003	1 of 3	New	Soft	PLC	Valve - Indication - Remote	-	-	-	-	-	02-LCP-001	-	
B	-	02-P-130	DAF Train 1 Saturator	02-PI-130	DAF Train 1 Saturator Pressure Gauge	17805-PR-PID-003	1 of 3	New	-	-	Pressure - Gauge	-	-	-	-	-	Field	-	
B	-	02-P-131	DAF Train 1 Saturator	02-PCV-131	DAF Train 1 Saturator Compressed Air Supply Pressure Regulator	17805-PR-PID-003	1 of 3	New	-	-	Valve - Pressure Regulator	-	-	-	-	-	Field	-	
B	02-LCP-001	02-X-132	DAF Train 1 Saturator	02-XHS-132A	DAF Train 1 Saturator Compressed Air Supply Solenoid Valve Auto	17805-PR-PID-003	1 of 3	New	DI	PLC	Switch - Panel Mounted HOA	-	24 VDC	-	-	-	02-LCP-001	02-LCP-001	
B	02-LCP-001	02-X-132	DAF Train 1 Saturator	02-XHS-132B	DAF Train 1 Saturator Compressed Air Supply Solenoid Valve Hand	17805-PR-PID-003	1 of 3	New	DI	PLC	Switch - Panel Mounted HOA	-	24 VDC	-	-	-	02-LCP-001	02-LCP-001	
B	-	02-X-132	DAF Train 1 Saturator	02-XHI-132	DAF Train 1 Saturator Compressed Air Supply Solenoid Valve Hand/Auto Indication	17805-PR-PID-003	1 of 3	New	Soft	PLC	Switch - Indication - Position	-	-	-	-	-	02-LCP-001	-	
B	-	02-X-132	DAF Train 1 Saturator	02-XV-132	DAF Train 1 Saturator Compressed Air Supply Solenoid Valve	17805-PR-PID-003	1 of 3	New	-	-	Valve - 2-Way Solenoid	120 VAC	-	-	0.58A	-	Field	-	
B	02-XV-132	02-X-132	DAF Train 1 Saturator	02-XC-132	DAF Train 1 Saturator Compressed Air Supply Solenoid Valve Position Command	17805-PR-PID-003	1 of 3	New	DO	PLC	Controller - Valve Position Output	-	24 VDC	-	-	-	02-LCP-001	Field	
B	-	02-P-221	DAF Train 2 Recycle Pump	02-PI-221	DAF Train 2 Recycle Pump Suction Pressure	17805-PR-PID-003	2 of 3	New	-	-	Pressure - Gauge	-	-	-	-	-	Field	-	
B	02-PIT-222	02-P-222	DAF Train 2 Recycle Pump	02-PT-222	DAF Train 2 Recycle Pump Suction Pressure Transmitter	17805-PR-PID-003	2 of 3	New	AI	PLC	Pressure - Transmitter	-	24 VDC	4-20 mA	-	-	Field	02-LCP-001	
B	-	02-P-222	DAF Train 2 Recycle Pump	02-PI-222	DAF Train 2 Recycle Pump Suction Pressure Indication	17805-PR-PID-003	2 of 3	New	Soft	PLC	Pressure - Indication	-	-	-	-	-	02-LCP-001	-	
B	02-LCP-001	02-L-220	DAF Train 2 Recycle Pump	02-HS-220A	DAF Train 2 Recycle Pump HOA Switch - Auto	17805-PR-PID-003	2 of 3	New	Soft	PLC	Switch - Local Mounted HOA	-	-	Ethernet	-	-	FIELD	Client	HOA Switch installed in field near motor. Wired to customer system.
B	02-LCP-001	02-L-220	DAF Train 2 Recycle Pump	02-HS-220B	DAF Train 2 Recycle Pump HOA Switch - Hand	17805-PR-PID-003	2 of 3	New	Soft	PLC	Switch - Local Mounted HOA	-	-	Ethernet	-	-	FIELD	Client	HOA Switch installed in field near motor. Wired to customer system.
B	-	02-L-220	DAF Train 2 Recycle Pump	02-HI-220	DAF Train 2 Recycle Pump Hand/Auto Indication	17805-PR-PID-003	2 of 3	New	Soft	PLC	Switch - Indication - Position	-	-	-	-	-	02-LCP-001	-	
B	-	02-L-220	DAF Train 2 Recycle Pump	02-LC-220	DAF Train 2 Recycle Pump Speed Controller	17805-PR-PID-003	2 of 3	New	Soft	PLC	Controller - VFD Controller	-	-	Ethernet	-	-	02-LCP-001	02-P-220 VFD	VFD Supplied and Installed by Others
B		02-L-220	DAF Train 2 Recycle Pump	02-SI-220	DAF Train 2 Recycle Pump Speed Feedback	17805-PR-PID-003	2 of 3	New	Soft	PLC	Motor - Indication - Speed	-	-	Ethernet	-	-	02-LCP-001	02-P-220 VFD	VFD Supplied and Installed by Others
B	-	02-L-220	DAF Train 2 Recycle Pump	02-UI-220	DAF Train 2 Recycle Pump Status Indication	17805-PR-PID-003	2 of 3	New	Soft	PLC	Motor - Indication - Status	-	-	Ethernet	-	-	02-LCP-001	02-P-220 VFD	VFD Supplied and Installed by Others
B	-	02-L-220	DAF Train 2 Recycle Pump	02-UA-220	DAF Train 2 Recycle Pump Fault Alarm	17805-PR-PID-003	2 of 3	New	Soft	PLC	Motor - Alarm - Fault	-	-	Ethernet	-	-	02-LCP-001	02-P-220 VFD	VFD Supplied and Installed by Others
B	-	02-P-223	DAF Train 2 Recycle Pump	02-PI-223	DAF Train 2 Recycle Pump Discharge Pressure	17805-PR-PID-003	2 of 3	New	-	-	Pressure - Gauge	-	-	-	-	-	Field	-	
B	02-PIT-224	02-P-224	DAF Train 2 Recycle Pump	02-PT-224	DAF Train 2 Recycle Pump Discharge Pressure Transmitter	17805-PR-PID-003	2 of 3	New	AI	PLC	Pressure - Transmitter	-	24 VDC	4-20 mA	-	-	Field	02-LCP-001	
B	-	02-P-224	DAF Train 2 Recycle Pump	02-PI-224	DAF Train 2 Recycle Pump Discharge Pressure Indication	17805-PR-PID-003	2 of 3	New	Soft	PLC	Pressure - Indication	-	-	-	-	-	02-LCP-001	-	
B	-	02-P-224	DAF Train 2 Recycle Pump	02-PAHH-224	DAF Train 2 Recycle Pump Discharge Pressure Alarm High High	17805-PR-PID-003	2 of 3	New	Soft	PLC	Pressure - Alarm High High	-	-	-	-	-	02-LCP-001	-	
B	02-FIT-226	02-F-226	DAF Train 2 Recycle Pump	02-FIT-226	DAF Train 2 Recycle Pump Discharge Flow Transmitter	17805-PR-PID-003	2 of 3	New	AI	PLC	Flow - Electromagnetic Flowmeter	120 VAC	24 VDC	4-20 mA	30VA/8W	No	Field	02-LCP-001	
B	-	02-F-226	DAF Train 2 Recycle Pump	02-FI-226	DAF Train 2 Recycle Pump Discharge Flow Indication	17805-PR-PID-003	2 of 3	New	Soft	PLC	Flow - Indication	-	-	-	-	-	02-LCP-001	-	
B	-	02-F-226	DAF Train 2 Recycle Pump	02-FAL-226	DAF Train 2 Recycle Pump Discharge Flow Alarm Low	17805-PR-PID-003	2 of 3	New	Soft	PLC	Flow - Alarm High high	-	-	-	-	-	02-LCP-001	-	
B	02-LIT-228	02-L-228	DAF Train 2 Saturator	02-LIT-228	DAF Train 2 Saturator Tank Level Transmitter	17805-PR-PID-003	2 of 3	New	AI	PLC	Level - Transmitter -Differential Pressure	-	24 VDC	4-20 mA	-	-	Field	02-LCP-001	
B	-	02-L-228	DAF Train 2 Saturator	02-LI-228	DAF Train 2 Saturator Tank Level Indication	17805-PR-PID-003	2 of 3	New	Soft	PLC	Level - Indication	-	-	-	-	-	02-LCP-001	-	
B	-	02-L-228	DAF Train 2 Saturator	02-LAHH-228	DAF Train 2 Saturator Tank Level Alarm High High	17805-PR-PID-003	2 of 3	New	Soft	PLC	Level - Alarm High High	-	-	-	-	-	02-LCP-001	-	
B	-	02-L-228	DAF Train 2 Saturator	02-LAH-228	DAF Train 2 Saturator Tank Level Alarm High	17805-PR-PID-003	2 of 3	New	Soft	PLC	Level - Alarm High	-	-	-	-	-	02-LCP-001	-	
B	-	02-L-228	DAF Train 2 Saturator	02-LAL-228	DAF Train 2 Saturator Tank Level Alarm Low	17805-PR-PID-003	2 of 3	New	Soft	PLC	Level - Alarm Low	-	-	-	-	-	02-LCP-001	-	
B	-	02-L-228	DAF Train 2 Saturator	02-LALL-228	DAF Train 2 Saturator Tank Level Alarm Low Low	17805-PR-PID-003	2 of 3	New	Soft	PLC	Level - Alarm Low Low	-	-	-	-	-	02-LCP-001	-	
B		02-L-229	DAF Train 2 Saturator	02-LI-229	DAF Train 2 Saturator Tank Level Gauge	17805-PR-PID-003	2 of 3	New	-	-	Level - Gauge - Glass	-	-	-	-	-	Field	-	
B	-	02-X-225	DAF Train 2 Saturator	02-XV-225	DAF Train 2 Recycle Return Valve	17805-PR-PID-003	2 of 3	New	-	-	Butterfly Valve	-	-	-	-	-	Field	-	
B	02-XV-225	02-X-225	DAF Train 2 Saturator	02-XY-225	DAF Train 2 Recycle Return Valve Actuator	17805-PR-PID-003	2 of 3	New	-	-	Valve - Control - Actuator - Electric	120 VAC	-	-	0.43kW	No	Field	02-LCP-001	
B	02-LCP-001	02-X-225	DAF Train 2 Saturator	02-XHS-225A	DAF Train 2 Recycle Return Valve HOA Switch - Auto	17805-PR-PID-003	2 of 3	New	DI	PLC	Switch - Panel Mounted HOA	-	24 VDC	-	-	No	02-LCP-001	02-LCP-001	
B	-	02-X-225	DAF Train 2 Saturator	02-XHS-225B	DAF Train 2 Recycle Return Valve HOA Switch - Hand	17805-PR-PID-003	2 of 3	New	DI	PLC	Switch - Panel Mounted HOA	-	24 VDC	-	-	No	02-LCP-001	02-LCP-001	
B	-	02-X-225	DAF Train 2 Saturator	02-XHI-225	DAF Train 2 Recycle Return Valve HOA Switch - Hand/Auto Indication	17805-PR-PID-003	2 of 3	New	Soft	PLC	Switch - Indication - Position	-	-	-	-	-	02-LCP-001	-	
B	02-XV-225	02-X-225	DAF Train 2 Saturator	02-XC-225	DAF Train 2 Recycle Return Valve Command Position	17805-PR-PID-003	2 of 3	New	AO	PLC	Controller - Valve Position Output	-	24 VDC	4-20 mA	-	No	02-LCP-001	Field	Modulating Valve for Slow Opening and Level Recovery Sequence
B	02-XV-225	02-X-225	DAF Train 2 Saturator	02-XSC-225	DAF Train 2 Recycle Return Valve Position Switch Closed	17805-PR-PID-003	2 of 3	New	DI	PLC	Valve - Switch - Position	-	24 VDC	-	-	No	Field	02-LCP-001	
B	-	02-X-225	DAF Train 2 Saturator	02-XIC-225	DAF Train 2 Recycle Return Valve Position Indication Closed	17805-PR-PID-003	2 of 3	New	Soft	PLC	Valve - Indication - Position	-	-	-	-	-	02-LCP-001	-	
B	02-XV-225	02-X-225	DAF Train 2 Saturator	02-XSO-225	DAF Train 2 Recycle Return Valve Position Switch Open	17805-PR-PID-003	2 of 3	New	DI	PLC	Valve - Switch - Position	-	24 VDC	-	-	No	Field	02-LCP-001	
B	-	02-X-225	DAF Train 2 Saturator	02-XIO-225	DAF Train 2 Recycle Return Valve Position Indication Open	17805-PR-PID-003	2 of 3	New	Soft	PLC	Valve - Indication - Position	-	-	-	-	-	02-LCP-001	-	
B	-	02-X-225	DAF Train 2 Saturator	02-XAD-225	DAF Train 2 Recycle Return Valve Position Discrepancy Alarm	17805-PR-PID-003	2 of 3	New	Soft	PLC	Valve - Alarm - Discrepancy	-	-	-	-	-	02-LCP-001	02-LCP-001	
B	02-XV-225	02-X-225	DAF Train 2 Saturator	02-XS-225	DAF Train 2 Recycle Return Valve Fault Signal	17805-PR-PID-003	2 of 3	New	DI	PLC	Valve - Actuator Fault Output	-	24 VDC	-	-	No	Field	02-LCP-001	
B	-	02-X-225	DAF Train 2 Saturator	02-XA-225	DAF Train 2 Recycle Return Valve Fault Alarm	17805-PR-PID-003	2 of 3	New	Soft	PLC	Valve - Alarm - Fault	-	-	-	-	-	02-LCP-001	-	
B	02-XV-225	02-X-225	DAF Train 2 Saturator	02-XHS-225C	DAF Train 2 Recycle Return Valve Local/Remote Switch	17805-PR-PID-003	2 of 3	New	DI	PLC	Valve - Switch - Local/Remote	-	24 VDC	-	-	No	Field	02-LCP-001	
B	-	02-X-225	DAF Train 2 Saturator	02-XAR-225	DAF Train 2 Recycle Return Valve Remote Indication	17805-PR-PID-003	2 of 3	New	Soft	PLC	Valve - Indication - Remote	-	-	-	-	-	02-LCP-001	-	
B	-	02-P-227	DAF Train 2 Saturator	02-PSV-227	DAF Train 2 Saturator PSV	17805-PR-PID-003	2 of 3	New	-	-	Valve - Pressure Relief (PSV)	-	-	-	-	-	Field	-	
B	-	02-P-230	DAF Train 2 Saturator	02-PI-230	DAF Train 2 Saturator Pressure Gauge	17805-PR-PID-003	2 of 3	New	-	-	Pressure - Gauge	-	-	-	-	-	Field	-	
B	-	02-P-231	DAF Train 2 Saturator	02-PCV-231	DAF Train 2 Saturator Compressed Air Supply Pressure Regulator	17805-PR-PID-003	2 of 3	New	-	-	Valve - Pressure Regulator	-	-	-	-	-	Field	-	
B	02-LCP-001	02-X-232	DAF Train 2 Saturator	02-XHS-232A	DAF Train 2 Saturator Compressed Air Supply Solenoid Valve Auto	17805-PR-PID-003	2 of 3	New	DI	PLC	Switch - Panel Mounted HOA	-	24 VDC	-	-	-	02-LCP-001	02-LCP-001	
B	02-LCP-001	02-X-232	DAF Train 2 Saturator	02-XHS-232B	DAF Train 2 Saturator Compressed Air Supply Solenoid Valve Hand	17805-PR-PID-003	2 of 3	New	DI	PLC	Switch - Panel Mounted HOA	-	24 VDC	-	-	-	02-LCP-001	02-LCP-001	
B	-	02-X-232	DAF Train 2 Saturator	02-XHI-232	DAF Train 2 Saturator Compressed Air Supply Solenoid Valve Hand/Auto Indication	17805-PR-PID-003	2 of 3	New	Soft	PLC	Switch - Indication - Position	-	-	-	-	-	02-LCP-001	-	
B	-	02-X-232	DAF Train 2 Saturator	02-XV-232	DAF Train 2 Saturator Compressed Air Supply Solenoid Valve	17805-PR-PID-003	2 of 3	New	-	-	Valve - 2-Way Solenoid	120 VAC	-	-	0.58A	-	Field	-	
B	02-XV-232	02-X-232	DAF Train 2 Saturator	02-XC-232	DAF Train 2 Saturator Compressed Air Supply Solenoid Valve Position Command	17805-PR-PID-003	2 of 3	New	DO	PLC	Controller - Valve Position Output	-	24 VDC	-	-	-	02-LCP-001	Field	
B	-	02-P-321	DAF Train 3 Recycle Pump	02-PI-321	DAF Train 3 Recycle Pump Suction Pressure	17805-PR-PID-003	3 of 3	New	-	-	Pressure - Gauge	-	-	-	-	-	Field	-	
B	02-PIT-322	02-P-322	DAF Train 3 Recycle Pump	02-PT-322	DAF Train 3 Recycle Pump Suction Pressure Transmitter	17805-PR-PID-003	3 of 3	New	AI	PLC	Pressure - Transmitter	-	24 VDC	4-20 mA	-	-	Field	02-LCP-001	
B	-	02-P-322	DAF Train 3 Recycle Pump	02-PI-322	DAF Train 3 Recycle Pump Suction Pressure Indication	17805-PR-PID-003	3 of 3	New	Soft	PLC	Pressure - Indication	-	-	-	-	-	02-LCP-001	-	
B	02-LCP-001	02-L-320	DAF Train 3 Recycle Pump	02-HS-320A	DAF Train 3 Recycle Pump HOA Switch - Auto	17805-PR-PID-003	3 of 3	New	Soft	PLC	Switch - Local Mounted HOA	-	-	Ethernet	-	-	FIELD	Client	HOA Switch installed in field near motor. Wired to customer system.
B	02-LCP-001	02-L-320	DAF Train 3 Recycle Pump	02-HS-320B	DAF Train 3 Recycle Pump HOA Switch - Hand	17805-PR-PID-003	3 of 3	New	Soft	PLC	Switch - Local Mounted HOA	-	-	Ethernet	-	-	FIELD	Client	HOA Switch installed in field near motor. Wired to customer system.
B	-	02-L-320	DAF Train 3 Recycle Pump	02-HI-320	DAF Train 3 Recycle Pump Hand/Auto Indication	17805-PR-PID-003	3 of 3	New	Soft	PLC	Switch - Indication - Position	-	-	-	-	-	02-LCP-001	-	
B	-	02-L-320	DAF Train 3 Recycle Pump	02-LC-320	DAF Train 3 Recycle Pump Speed Controller	17805-PR-PID-003	3 of 3	New	Soft	PLC	Controller - VFD Controller	-	-	Ethernet	-	-	02-LCP-001	02-P-320 VFD	VFD Supplied and Installed by Others
B		02-L-320	DAF Train 3 Recycle Pump	02-SI-320	DAF Train 3 Recycle Pump Speed Feedback	17805-PR-PID-003	3 of 3	New	Soft	PLC	Motor - Indication - Speed	-	-	Ethernet	-	-	02-LCP-001	02-P-320 VFD	VFD Supplied and Installed by Others
B	-	02-L-320	DAF Train 3 Recycle Pump	02-UI-320	DAF Train 3 Recycle Pump Status Indication	17805-PR-PID-003	3 of 3	New	Soft	PLC	Motor - Indication - Status	-	-	Ethernet	-	-	02-LCP-001	02-P-320 VFD	VFD Supplied and Installed by Others
B	-	02-L-320	DAF Train 3 Recycle Pump	02-UA-320	DAF Train 3 Recycle Pump Fault Alarm	17805-PR-PID-003	3 of 3	New	Soft	PLC	Motor - Alarm - Fault	-	-	Ethernet	-	-	02-LCP-001	02-P-320 VFD	VFD Supplied and Installed by Others
B	-	02-P-323	DAF Train 3 Recycle Pump	02-PI-323	DAF Train 3 Recycle Pump Discharge Pressure	17805-PR-PID-003	3 of 3	New	-	-	Pressure - Gauge	-	-	-	-	-	Field	-	

INSTRUMENT INDEX

Rev	Equipment No	Loop Number	Loop Service	Tag Number	Tag Description	P&ID	Sheet	Status	IO Type Name	System	Instrument Type	Power Voltage	Control Voltage	Signal	Power / Current	UPS Powered	Location	Wired To/From	Notes
B	02-PIT-324	02-P-324	DAF Train 3 Recycle Pump	02-PT-324	DAF Train 3 Recycle Pump Discharge Pressure Transmitter	17805-PR-PID-003	3 of 3	New	AI	PLC	Pressure - Transmitter	-	24 VDC	4-20 mA	-	-	Field	02-LCP-001	
B	-	02-P-324	DAF Train 3 Recycle Pump	02-PI-324	DAF Train 3 Recycle Pump Discharge Pressure Indication	17805-PR-PID-003	3 of 3	New	Soft	PLC	Pressure - Indication	-	-	-	-	-	02-LCP-001	-	
B	-	02-P-324	DAF Train 3 Recycle Pump	02-PAHH-324	DAF Train 3 Recycle Pump Discharge Pressure Alarm High High	17805-PR-PID-003	3 of 3	New	Soft	PLC	Pressure - Alarm High High	-	-	-	-	-	02-LCP-001	-	
B	02-FIT-326	02-F-326	DAF Train 3 Recycle Pump	02-FIT-326	DAF Train 3 Recycle Pump Discharge Flow Transmitter	17805-PR-PID-003	3 of 3	New	AI	PLC	Flow - Electromagnetic Flowmeter	120 VAC	24 VDC	4-20 mA	30VA/8W	-	Field	02-LCP-001	
B	-	02-F-326	DAF Train 3 Recycle Pump	02-FI-326	DAF Train 3 Recycle Pump Discharge Flow Indication	17805-PR-PID-003	3 of 3	New	Soft	PLC	Flow - Indication	-	-	-	-	-	02-LCP-001	-	
B	-	02-F-326	DAF Train 3 Recycle Pump	02-FAL-326	DAF Train 3 Recycle Pump Discharge Flow Alarm Low	17805-PR-PID-003	3 of 3	New	Soft	PLC	Flow - Alarm High High	-	-	-	-	-	02-LCP-001	-	
B	02-LIT-328	02-L-328	DAF Train 3 Saturator	02-LIT-328	DAF Train 3 Saturator Tank Level Transmitter	17805-PR-PID-003	3 of 3	New	AI	PLC	Level - Transmitter -Differential Pressure	-	24 VDC	4-20 mA	-	-	Field	02-LCP-001	
B	-	02-L-328	DAF Train 3 Saturator	02-LI-328	DAF Train 3 Saturator Tank Level Indication	17805-PR-PID-003	3 of 3	New	Soft	PLC	Level - Indication	-	-	-	-	-	02-LCP-001	-	
B	-	02-L-328	DAF Train 3 Saturator	02-LAHH-328	DAF Train 3 Saturator Tank Level Alarm High High	17805-PR-PID-003	3 of 3	New	Soft	PLC	Level - Alarm High High	-	-	-	-	-	02-LCP-001	-	
B		02-L-328	DAF Train 3 Saturator	02-LAH-328	DAF Train 3 Saturator Tank Level Alarm High	17805-PR-PID-003	3 of 3	New	Soft	PLC	Level - Alarm High	-	-	-	-	-	02-LCP-001	-	
B		02-L-328	DAF Train 3 Saturator	02-LAL-328	DAF Train 3 Saturator Tank Level Alarm Low	17805-PR-PID-003	3 of 3	New	Soft	PLC	Level - Alarm Low	-	-	-	-	-	02-LCP-001	-	
B		02-L-328	DAF Train 3 Saturator	02-LALL-328	DAF Train 3 Saturator Tank Level Alarm Low Low	17805-PR-PID-003	3 of 3	New	Soft	PLC	Level - Alarm Low Low	-	-	-	-	-	02-LCP-001	-	
B		02-L-329	DAF Train 3 Saturator	02-LI-329	DAF Train 3 Saturator Tank Level Gauge	17805-PR-PID-003	3 of 3	New	-	-	Level - Gauge - Glass	-	-	-	-	-	Field	-	
B	-	02-X-325	DAF Train 3 Saturator	02-XV-325	DAF Train 3 Recycle Return Valve	17805-PR-PID-003	3 of 3	New	-	-	Butterfly Valve	-	-	-	-	-	Field	-	
B	02-XV-325	02-X-325	DAF Train 3 Saturator	02-XY-325	DAF Train 3 Recycle Return Valve Actuator	17805-PR-PID-003	3 of 3	New	-	-	Valve - Control - Actuator - Electric	120 VAC	-	-	0.43kW	No	Field	02-LCP-001	
B	02-LCP-001	02-X-325	DAF Train 3 Saturator	02-XHS-325A	DAF Train 3 Recycle Return Valve HOA Switch - Auto	17805-PR-PID-003	3 of 3	New	DI	PLC	Switch - Panel Mounted HOA	-	24 VDC	-	-	No	02-LCP-001	02-LCP-001	
B	-	02-X-325	DAF Train 3 Saturator	02-XHS-325B	DAF Train 3 Recycle Return Valve HOA Switch - Hand	17805-PR-PID-003	3 of 3	New	DI	PLC	Switch - Panel Mounted HOA	-	24 VDC	-	-	No	02-LCP-001	02-LCP-001	
B	-	02-X-325	DAF Train 3 Saturator	02-XHI-325	DAF Train 3 Recycle Return Valve HOA Switch - Hand/Auto Indication	17805-PR-PID-003	3 of 3	New	Soft	PLC	Switch - Indication - Position	-	-	-	-	-	02-LCP-001	-	
B	02-XV-325	02-X-325	DAF Train 3 Saturator	02-XC-325	DAF Train 3 Recycle Return Valve Command Position	17805-PR-PID-003	3 of 3	New	AO	PLC	Controller - Valve Position Output	-	24 VDC	-	-	No	02-LCP-001	Field	Modulating Valve for Slow Opening and Level Recovery Sequence
B	02-XV-325	02-X-325	DAF Train 3 Saturator	02-XSC-325	DAF Train 3 Recycle Return Valve Position Switch Closed	17805-PR-PID-003	3 of 3	New	DI	PLC	Valve - Switch - Position	-	24 VDC	-	-	No	Field	02-LCP-001	
B	-	02-X-325	DAF Train 3 Saturator	02-XIC-325	DAF Train 3 Recycle Return Valve Position Indication Closed	17805-PR-PID-003	3 of 3	New	Soft	PLC	Valve - Indication - Position	-	-	-	-	-	02-LCP-001	-	
B	02-XV-325	02-X-325	DAF Train 3 Saturator	02-XSO-325	DAF Train 3 Recycle Return Valve Position Switch Open	17805-PR-PID-003	3 of 3	New	DI	PLC	Valve - Switch - Position	-	24 VDC	-	-	No	Field	02-LCP-001	
B	-	02-X-325	DAF Train 3 Saturator	02-XIO-325	DAF Train 3 Recycle Return Valve Position Indication Open	17805-PR-PID-003	3 of 3	New	Soft	PLC	Valve - Indication - Position	-	-	-	-	-	02-LCP-001	-	
B	-	02-X-325	DAF Train 3 Saturator	02-XAD-325	DAF Train 3 Recycle Return Valve Position Discrepancy Alarm	17805-PR-PID-003	3 of 3	New	Soft	PLC	Valve - Alarm - Discrepancy	-	-	-	-	-	02-LCP-001	02-LCP-001	
B	02-XV-325	02-X-325	DAF Train 3 Saturator	02-XS-325	DAF Train 3 Recycle Return Valve Fault Signal	17805-PR-PID-003	3 of 3	New	DI	PLC	Valve - Actuator Fault Output	-	24 VDC	-	-	No	Field	02-LCP-001	
B	-	02-X-325	DAF Train 3 Saturator	02-XA-325	DAF Train 3 Recycle Return Valve Fault Alarm	17805-PR-PID-003	3 of 3	New	Soft	PLC	Valve - Alarm - Fault	-	-	-	-	-	02-LCP-001	-	
B	02-XV-325	02-X-325	DAF Train 3 Saturator	02-XHS-325C	DAF Train 3 Recycle Return Valve Local/Remote Switch	17805-PR-PID-003	3 of 3	New	DI	PLC	Valve - Switch - Local/Remote	-	24 VDC	-	-	No	Field	02-LCP-001	
B	-	02-X-325	DAF Train 3 Saturator	02-XAR-325	DAF Train 3 Recycle Return Valve Remote Indication	17805-PR-PID-003	3 of 3	New	Soft	PLC	Valve - Indication - Remote	-	-	-	-	-	02-LCP-001	-	
B	-	02-P-327	DAF Train 3 Saturator	02-PSV-327	DAF Train 3 Saturator PSV	17805-PR-PID-003	3 of 3	New	-	-	Valve - Pressure Relief (PSV)	-	-	-	-	-	Field	-	
B	-	02-P-330	DAF Train 3 Saturator	02-PI-330	DAF Train 3 Saturator Pressure Gauge	17805-PR-PID-003	3 of 3	New	-	-	Pressure - Gauge	-	-	-	-	-	Field	-	
B	-	02-P-331	DAF Train 3 Saturator	02-PCV-331	DAF Train 3 Saturator Compressed Air Supply Pressure Regulator	17805-PR-PID-003	3 of 3	New	-	-	Valve - Pressure Regulator	-	-	-	-	-	Field	-	
B	02-LCP-001	02-X-332	DAF Train 3 Saturator	02-XHS-332A	DAF Train 3 Saturator Compressed Air Supply Solenoid Valve Auto	17805-PR-PID-003	3 of 3	New	DI	PLC	Switch - Panel Mounted HOA	-	24 VDC	-	-	-	02-LCP-001	02-LCP-001	
B	02-LCP-001	02-X-332	DAF Train 3 Saturator	02-XHS-332B	DAF Train 3 Saturator Compressed Air Supply Solenoid Valve Hand	17805-PR-PID-003	3 of 3	New	DI	PLC	Switch - Panel Mounted HOA	-	24 VDC	-	-	-	02-LCP-001	02-LCP-001	
B	-	02-X-332	DAF Train 3 Saturator	02-XHI-332	DAF Train 3 Saturator Compressed Air Supply Solenoid Valve Hand/Auto Indication	17805-PR-PID-003	3 of 3	New	Soft	PLC	Switch - Indication - Position	-	-	-	-	-	02-LCP-001	-	
B	-	02-X-332	DAF Train 3 Saturator	02-XV-332	DAF Train 3 Saturator Compressed Air Supply Solenoid Valve	17805-PR-PID-003	3 of 3	New	-	-	Valve - 2-Way Solenoid	120 VAC	-	-	0.58A	-	Field	-	
B	02-XV-332	02-X-332	DAF Train 3 Saturator	02-XC-332	DAF Train 3 Saturator Compressed Air Supply Solenoid Valve Position Command	17805-PR-PID-003	3 of 3	New	DO	PLC	Controller - Valve Position Output	-	24 VDC	-	-	-	02-LCP-001	Field	
A	08-AC-810	08-X-810	Air Compressor	08-XSI-810	Air Compressor 1 Status Indication	17805-PR-PID-004	1 of 1	New	DI	PLC	Motor - Indication - Status	-	24 VDC	-	-	No	Local Controller	02-LCP-001	
A	08-AC-810	08-X-810	Air Compressor	08-XSA-810	Air Compressor 1 Fault Alarm	17805-PR-PID-004	1 of 1	New	DI	PLC	Motor - Alarm - Fault	-	24 VDC	-	-	No	Local Controller	02-LCP-001	
A	08-AC-820	08-X-820	Air Compressor	08-XSI-820	Air Compressor 2 Status Indication	17805-PR-PID-004	1 of 1	New	DI	PLC	Motor - Indication - Status	-	24 VDC	-	-	No	Local Controller	02-LCP-001	
A	08-AC-820	08-X-820	Air Compressor	08-XSA-820	Air Compressor 2 Fault Alarm	17805-PR-PID-004	1 of 1	New	DI	PLC	Motor - Alarm - Fault	-	24 VDC	-	-	No	Local Controller	02-LCP-001	
A	-	08-E-810	Air Compressor	08-ESD-801	Air Compressor Package Local Shutdown Switch	17805-PR-PID-004	1 of 1	New	-	-	Switch - Emergency Shutdown	-	-	-	-	-	Field	Local Panel	Supplied and installed by others.
A	-	08-P-812	Air Compressor	08-PSH-812	Air Compressor 1 Pressure Switch High	17805-PR-PID-004	1 of 1	New	-	-	Pressure - Switch	-	-	-	-	-	Field	Local Panel	Supplied and installed by others.
A	-	08-P-813	Air Compressor	08-PSH-813	Air Compressor 2 Pressure Switch High	17805-PR-PID-004	1 of 1	New	-	-	Pressure - Switch	-	-	-	-	-	Field	Local Panel	Supplied and installed by others.
A	-	08-P-814	Air Compressor	08-PI-814	Air Compressor Receiver Pressure Gauge	17805-PR-PID-004	1 of 1	New	-	-	Pressure - Gauge	-	-	-	-	-	Field	-	Supplied and installed by others.
A	-	08-P-815	Air Compressor	08-PSV-815	Air Compressor Receiver PSV	17805-PR-PID-004	1 of 1	New	-	-	Valve - Pressure Relief (PSV)	-	-	-	-	-	Field	-	Supplied and installed by others.
A	-	08-P-816	Air Compressor	08-PDI-816	Air Compressor Filter - General Purpose	17805-PR-PID-004	1 of 1	New	-	-	Pressure - Gauge - Differential	-	-	-	-	-	Field	-	Shipped Loose. Installed by Others
A	-	08-P-817	Air Compressor	08-PDI-817	Air Compressor Filter - Coalescing	17805-PR-PID-004	1 of 1	New	-	-	Pressure - Gauge - Differential	-	-	-	-	-	Field	-	Shipped Loose. Installed by Others
A	-	08-P-818	Air Compressor	08-PDI-818	Air Compressor Filter - Activated Carbon	17805-PR-PID-004	1 of 1	New	-	-	Pressure - Gauge - Differential	-	-	-	-	-	Field	-	Shipped Loose. Installed by Others
A	-	08-X-819	Air Compressor	08-XV-819	Air Compressor Receiver Drain Valve	17805-PR-PID-004	1 of 1	New	-	-	Valve - 2-Way Solenoid	-	-	-	-	-	Field	Local Panel	Supplied and installed by others.
A	-	08-P-820	Air Compressor	08-PI-820	Air Compressor Package Outlet Pressure Gauge	17805-PR-PID-004	1 of 1	New	-	-	Pressure - Gauge	-	-	-	-	-	Field	-	Shipped Loose. Installed by Others
B	-	03-X-140	Filter Tank 1	03-XV-140	Filter Tank 1 Inlet Valve	17805-PR-PID-006	1 of 2	New	-	-	Butterfly Valve	-	-	-	-	-	Field	-	
B	03-XV-140	03-X-140	Filter Tank 1	03-XY-140	Filter Tank 1 Inlet Valve Actuator	17805-PR-PID-006	1 of 2	New	-	-	Valve - Control - Actuator - Electric	120 VAC	-	-	0.43kW	No	Field	03-RCP-101	
B	03-RCP-101	03-X-140	Filter Tank 1	03-XHS-140A	Filter Tank 1 Inlet Valve HOA Switch - Auto	17805-PR-PID-006	1 of 2	New	DI	PLC	Switch - Panel Mounted HOA	-	24 VDC	-	-	No	03-RCP-101	03-RCP-101	
B	03-RCP-101	03-X-140	Filter Tank 1	03-XHS-140B	Filter Tank 1 Inlet Valve HOA Switch - Hand	17805-PR-PID-006	1 of 2	New	DI	PLC	Switch - Panel Mounted HOA	-	24 VDC	-	-	No	03-RCP-101	03-RCP-101	
B	-	03-X-140	Filter Tank 1	03-XHI-140	Filter Tank 1 Inlet Valve HOA Switch - Hand/Auto Indication	17805-PR-PID-006	1 of 2	New	Soft	PLC	Switch - Indication - Position	-	-	-	-	-	03-RCP-101	-	
B	03-XV-140	03-X-140	Filter Tank 1	03-XC-140	Filter Tank 1 Inlet Valve Command Open/Closed	17805-PR-PID-006	1 of 2	New	DO	PLC	Controller - Valve Position Output	-	24 VDC	-	-	No	03-RCP-101	Field	De-energize to close
B	03-XV-140	03-X-140	Filter Tank 1	03-XSC-140	Filter Tank 1 Inlet Valve Position Switch Closed	17805-PR-PID-006	1 of 2	New	DI	PLC	Valve - Switch - Position	-	24 VDC	-	-	No	Field	03-RCP-101	
B	-	03-X-140	Filter Tank 1	03-XIC-140	Filter Tank 1 Inlet Valve Position Indication Closed	17805-PR-PID-006	1 of 2	New	Soft	PLC	Valve - Indication - Position	-	-	-	-	-	03-RCP-101	-	
B	03-XV-140	03-X-140	Filter Tank 1	03-XSO-140	Filter Tank 1 Inlet Valve Position Switch Open	17805-PR-PID-006	1 of 2	New	DI	PLC	Valve - Switch - Position	-	24 VDC	-	-	No	Field	03-RCP-101	
B	-	03-X-140	Filter Tank 1	03-XIO-140	Filter Tank 1 Inlet Valve Position Indication Open	17805-PR-PID-006	1 of 2	New	Soft	PLC	Valve - Indication - Position	-	-	-	-	-	03-RCP-101	-	
B	-	03-X-140	Filter Tank 1	03-XAD-140	Filter Tank 1 Inlet Valve Position Discrepancy Alarm	17805-PR-PID-006	1 of 2	New	Soft	PLC	Valve - Alarm - Discrepancy	-	-	-	-	-	03-RCP-101	-	
B	03-XV-140	03-X-140	Filter Tank 1	03-XS-140	Filter Tank 1 Inlet Valve Fault Signal	17805-PR-PID-006	1 of 2	New	DI	PLC	Valve - Actuator Fault Output	-	24 VDC	-	-	No	Field	03-RCP-101	
B	-	03-X-140	Filter Tank 1	03-XA-140	Filter Tank 1 Inlet Valve Fault Alarm	17805-PR-PID-006	1 of 2	New	Soft	PLC	Valve - Alarm - Fault	-	-	-	-	-	03-RCP-101	-	
B	03-XV-140	03-X-140	Filter Tank 1	03-XHS-140C	Filter Tank 1 Inlet Valve Local/Remote Switch	17805-PR-PID-006	1 of 2	New	DI	PLC	Valve - Switch - Local/Remote	-	24 VDC	-	-	No	Field	03-RCP-101	
B	-	03-X-140	Filter Tank 1	03-XAR-140	Filter Tank 1 Inlet Valve Remote Indication	17805-PR-PID-006	1 of 2	New	Soft	PLC	Valve - Indication - Remote	-	-	-	-	-	03-RCP-101	-	
B	03-LIT-141	03-L-141	Filter Tank 1	03-LIT-141	Filter Tank 1 Level Transmitter	17805-PR-PID-006	1 of 2	New	AI	PLC	Level - Transmitter -Radar	-	24 VDC	4-20 mA	-	-	Field	03-RCP-101	
B	-	03-L-141	Filter Tank 1	03-LI-141	Filter Tank 1 Level Indication	17805-PR-PID-006	1 of 2	New	Soft	PLC	Level - Indication	-	-	-	-	-	03-RCP-101	-	
B	-	03-L-141	Filter Tank 1	03-LAHH-141	Filter Tank 1 Level Alarm High High	17805-PR-PID-006	1 of 2	New	Soft	PLC	Level - Alarm High High	-	-	-	-	-	03-RCP-101	-	
B	-	03-L-141	Filter Tank 1	03-LAH-141	Filter Tank 1 Level Alarm High	17805-PR-PID-006	1 of 2	New	Soft	PLC	Level - Alarm High	-	-	-	-	-	03-RCP-101	-	
B	-	03-L-141	Filter Tank 1	03-LAL-141	Filter Tank 1 Level Alarm Low	17805-PR-PID-006	1 of 2	New	Soft	PLC	Level - Alarm Low	-	-	-	-	-	03-RCP-101	-	
B	-	03-L-141	Filter Tank 1	03-LALL-141	Filter Tank 1 Level Alarm Low Low	17805-PR-PID-006	1 of 2	New	Soft	PLC	Level - Alarm Low Low	-	-	-	-	-	03-RCP-101	-	
B	-	03-X-142	Filter Tank 1	03-XV-142	Filter Tank 1 Air Scour Valve	17805-PR-PID-006	1 of 2	New	-	-	Butterfly Valve	-	-	-	-	-	Field	-	
B	03-XV-142	03-X-142	Filter Tank 1	03-XY-142	Filter Tank 1 Air Scour Valve Actuator	17805-PR-PID-006	1 of 2	New	-	-	Valve - Control - Actuator - Electric	120 VAC	-	-	0.43kW	Yes	Field	03-RCP-101	
B	03-RCP-101	03-X-142	Filter Tank 1	03-XHS-142A	Filter Tank 1 Air Scour Valve HOA Switch - Auto	17805-PR-PID-006	1 of 2	New	DI	PLC	Switch - Panel Mounted HOA	-	24 VDC	-	-	No	03-RCP-101	03-RCP-101	
B	03-RCP-101	03-X-142	Filter Tank 1	03-XHS-142B	Filter Tank 1 Air Scour Valve HOA Switch - Hand	17805-PR-PID-006	1 of 2	New	DI	PLC	Switch - Panel Mounted HOA	-	24 VDC	-	-	No	03-RCP-101	03-RCP-101	
B	-	03-X-142	Filter Tank 1	03-XHI-142	Filter Tank 1 Air Scour Valve HOA Switch - Hand/Auto Indication	17805-PR-PID-006	1 of 2	New	Soft	PLC	Switch - Indication - Position	-	-	-	-	-	03-RCP-101	-	
B	03-XV-142	03-X-142	Filter Tank 1	03-XC-142	Filter Tank 1 Air Scour Valve Command Open/Closed	17805-PR-PID-006	1 of 2	New	DO	PLC	Controller - Valve Position Output	-	24 VDC	-	-	No	03-RCP-101	Field	De-energize to close
B	03-XV-142	03-X-142	Filter Tank 1	03-XSC-142	Filter Tank 1 Air Scour Valve Position Switch Closed	17805-PR-PID-006	1 of 2	New	DI	PLC	Valve - Switch - Position	-	24 VDC	-	-	No	Field	03-RCP-101	
B	-	03-X-142	Filter Tank 1	03-XIC-142	Filter Tank 1 Air Scour Valve Position Indication Closed	17805-PR-PID-006	1 of 2	New	Soft	PLC	Valve - Indication - Position	-	-	-	-	-	03-RCP-101	-	
B	03-XV-142	03-X-142	Filter Tank 1	03-XSO-142	Filter Tank 1 Air Scour Valve Position Switch Open	17805-PR-PID-006	1 of 2	New	DI	PLC	Valve - Switch - Position	-	24 VDC	-	-	No	Field	03-RCP-101	
B	-	03-X-142	Filter Tank 1	03-XIO-142	Filter Tank 1 Air Scour Valve Position Indication Open	17805-PR-PID-006	1 of 2	New	Soft	PLC	Valve - Indication - Position	-	-	-	-	-	03-RCP-101	-	
B	-	03-X-142	Filter Tank 1	03-XAD-142	Filter Tank 1 Air Scour Valve Position Discrepancy Alarm	17805-PR-PID-006	1 of 2	New	Soft	PLC	Valve - Alarm - Discrepancy	-	-	-	-	-	03-RCP-101	-	
B	03-XV-142	03-X-142	Filter Tank 1	03-XS-142	Filter Tank 1 Air Scour Valve Fault Signal	17805-PR-PID-006	1 of 2	New	DI	PLC	Valve - Actuator Fault Output	-	24 VDC	-	-	No	Field	03-RCP-101	
B	-	03-X-142	Filter Tank 1	03-XA-142	Filter Tank 1 Air Scour Valve Fault Alarm	17805-PR-PID-006	1 of 2	New	Soft	PLC	Valve - Alarm - Fault	-	-	-	-	-	03-RCP-101	-	
B	03-XV-142	03-X-142	Filter Tank 1	03-XHS-142C	Filter Tank 1 Air Scour Valve Local/Remote Switch	17805-PR-PID-006	1 of 2	New	DI	PLC	Valve - Switch - Local/Remote	-	24 VDC	-	-	No	Field	03-RCP-101	
B	-	03-X-142	Filter Tank 1	03-XAR-142	Filter Tank 1 Air Scour Valve Remote Indication	17805-PR-PID-006	1 of 2	New	Soft	PLC	Valve - Indication - Remote	-	-	-	-	-	03-RCP-101	-	
B	03-PIT-143	03-P-143	Filter Tank 1	03-PT-143	Filter Tank 1 Pressure Transmitter	17805-PR-PID-006	1 of 2	New	AI	PLC	Pressure - Transmitter	-	24 VDC	4-20 mA	-	-	Field	03-RCP-101	
B	-	03-P-143	Filter Tank 1	03-PI-143	Filter Tank 1 Pressure Indication	17805-PR-PID-006	1 of 2	New	Soft	PLC	Pressure - Indication	-	-	-	-	-	03-RCP-101	-	
B	-	03-P-143	Filter Tank 1	03-PAHH-143	Filter Tank 1 Pressure Alarm High High	17805-PR-PID-006	1 of 2	New	Soft	PLC	Pressure - Alarm High High	-	-	-	-	-	03-RCP-101	-	
B	-	03-P-143	Filter Tank 1	03-PAH-143	Filter Tank 1 Pressure Alarm High	17805-PR-PID-006	1 of 2	New	Soft	PLC	Pressure - Alarm High	-	-	-	-	-	03-RCP-101	-	
B	-	03-P-144	Filter Tank 1	03-PI-144	Filter Tank 1 Pressure Gauge	17805-PR-PID-006	1 of 2	New	-	-	Pressure - Gauge	-	-	-	-	-	Field	-	

INSTRUMENT INDEX

Rev	Equipment No	Loop Number	Loop Service	Tag Number	Tag Description	P&ID	Sheet	Status	IO Type Name	System	Instrument Type	Power Voltage	Control Voltage	Signal	Power / Current	UPS Powered	Location	Wired To/From	Notes
B	03-RCP-101	03-A-145	Filter Tank 1	03-AHS-145A	Filter Tank 1 Turbidity Sample Solenoid Valve Auto	17805-PR-PID-006	1 of 2	New	DI	PLC	Switch - Panel Mounted HOA	-	24 VDC	-	-	-	03-RCP-101	03-RCP-101	
B	03-RCP-101	03-A-145	Filter Tank 1	03-AHS-145B	Filter Tank 1 Turbidity Sample Solenoid Valve Hand	17805-PR-PID-006	1 of 2	New	DI	PLC	Switch - Panel Mounted HOA	-	24 VDC	-	-	-	03-RCP-101	03-RCP-101	
B	-	03-A-145	Filter Tank 1	03-AHI-145	Filter Tank 1 Turbidity Sample Solenoid Valve Hand/Auto Indication	17805-PR-PID-006	1 of 2	New	Soft	PLC	Switch - Indication - Position	-	-	-	-	-	03-RCP-101	-	
B	-	03-A-145	Filter Tank 1	03-AV-145	Filter Tank 1 Turbidity Sample Solenoid Valve	17805-PR-PID-006	1 of 2	New	-	-	Valve - 2-Way Solenoid	120 VAC	-	-	0.58A	-	Field	-	
B	03-AV-145	03-A-145	Filter Tank 1	03-AC-145	Filter Tank 1 Turbidity Sample Solenoid Valve Position Command	17805-PR-PID-006	1 of 2	New	DO	PLC	Controller - Valve Position Output	-	24 VDC	-	-	-	03-RCP-101	Field	
B	03-AIC-150	03-A-145	Filter Tank 1	03-AE-145	Filter Tank 1 Turbidity Analyzer	17805-PR-PID-006	1 of 2	New	-	PLC	Turbidity - Analyzer	-	-	-	-	-	Field	03-AIC-150	
B	03-AIC-150	03-A-145	Filter Tank 1	03-AIT-145	Filter Tank 1 Turbidity Transmitter - Signal	17805-PR-PID-006	1 of 2	New	AI	PLC	Turbidity - Transmitter	-	24 VDC	4-20 mA	-	-	Field	03-RCP-101	03-AIT-145 Signal from common Turbidity Controller 03-AIC-150
B	-	03-A-145	Filter Tank 1	03-AI-145	Filter Tank 1 Turbidity Indication	17805-PR-PID-006	1 of 2	New	Soft	PLC	Turbidity - Indication	-	-	-	-	-	03-RCP-101	-	
B	-	03-A-145	Filter Tank 1	03-AAH-145	Filter Tank 1 Turbidity Alarm High	17805-PR-PID-006	1 of 2	New	Soft	PLC	Turbidity - Alarm High	-	-	-	-	-	03-RCP-101	-	
B	03-AIC-150	03-A-150	Filter Tank 1/2/3	03-AIC-150	Filter Tank 1/2/3 Common Turbidity Field Controller	17805-PR-PID-006	1 of 2	New	-	PLC	Turbidity - Field Controller	120 VAC	-	-	0.6kW	No	Field	03-RCP-101	Common Turbidity Controller for 03-AE/AIT-145/165/185
B	-	03-X-160	Filter Tank 2	03-XV-160	Filter Tank 2 Inlet Valve	17805-PR-PID-006	1 of 2	New	-	-	Butterfly Valve	-	-	-	-	-	Field	-	
B	03-XV-160	03-X-160	Filter Tank 2	03-XY-160	Filter Tank 2 Inlet Valve Actuator	17805-PR-PID-006	1 of 2	New	-	-	Valve - Control - Actuator - Electric	120 VAC	-	-	0.43kW	Yes	Field	03-RCP-101	
B	03-RCP-101	03-X-160	Filter Tank 2	03-XHS-160A	Filter Tank 2 Inlet Valve HOA Switch - Auto	17805-PR-PID-006	1 of 2	New	DI	PLC	Switch - Panel Mounted HOA	-	24 VDC	-	-	No	03-RCP-101	03-RCP-101	
B	03-RCP-101	03-X-160	Filter Tank 2	03-XHS-160B	Filter Tank 2 Inlet Valve HOA Switch - Hand	17805-PR-PID-006	1 of 2	New	DI	PLC	Switch - Panel Mounted HOA	-	24 VDC	-	-	No	03-RCP-101	03-RCP-101	
B	-	03-X-160	Filter Tank 2	03-XHI-160	Filter Tank 2 Inlet Valve HOA Switch - Hand/Auto Indication	17805-PR-PID-006	1 of 2	New	Soft	PLC	Switch - Indication - Position	-	-	-	-	-	03-RCP-101	-	
B	03-XV-160	03-X-160	Filter Tank 2	03-XC-160	Filter Tank 2 Inlet Valve Command Open/Closed	17805-PR-PID-006	1 of 2	New	DO	PLC	Controller - Valve Position Output	-	24 VDC	-	-	No	03-RCP-101	Field	De-energize to close
B	03-XV-160	03-X-160	Filter Tank 2	03-XSC-160	Filter Tank 2 Inlet Valve Position Switch Closed	17805-PR-PID-006	1 of 2	New	DI	PLC	Valve - Switch - Position	-	24 VDC	-	-	No	Field	03-RCP-101	
B	-	03-X-160	Filter Tank 2	03-XIC-160	Filter Tank 2 Inlet Valve Position Indication Closed	17805-PR-PID-006	1 of 2	New	Soft	PLC	Valve - Indication - Position	-	-	-	-	-	03-RCP-101	-	
B	03-XV-160	03-X-160	Filter Tank 2	03-XSO-160	Filter Tank 2 Inlet Valve Position Switch Open	17805-PR-PID-006	1 of 2	New	DI	PLC	Valve - Switch - Position	-	24 VDC	-	-	No	Field	03-RCP-101	
B	-	03-X-160	Filter Tank 2	03-XIO-160	Filter Tank 2 Inlet Valve Position Indication Open	17805-PR-PID-006	1 of 2	New	Soft	PLC	Valve - Indication - Position	-	-	-	-	-	03-RCP-101	-	
B	-	03-X-160	Filter Tank 2	03-XAD-160	Filter Tank 2 Inlet Valve Position Discrepancy Alarm	17805-PR-PID-006	1 of 2	New	Soft	PLC	Valve - Alarm - Discrepancy	-	-	-	-	-	03-RCP-101	-	
B	03-XV-160	03-X-160	Filter Tank 2	03-XS-160	Filter Tank 2 Inlet Valve Fault Signal	17805-PR-PID-006	1 of 2	New	DI	PLC	Valve - Actuator Fault Output	-	24 VDC	-	-	No	Field	03-RCP-101	
B	-	03-X-160	Filter Tank 2	03-XA-160	Filter Tank 2 Inlet Valve Fault Alarm	17805-PR-PID-006	1 of 2	New	Soft	PLC	Valve - Alarm - Fault	-	-	-	-	-	03-RCP-101	-	
B	03-XV-160	03-X-160	Filter Tank 2	03-XHS-160C	Filter Tank 2 Inlet Valve Local/Remote Switch	17805-PR-PID-006	1 of 2	New	DI	PLC	Valve - Switch - Local/Remote	-	24 VDC	-	-	No	Field	03-RCP-101	
B	-	03-X-160	Filter Tank 2	03-XAR-160	Filter Tank 2 Inlet Valve Remote Indication	17805-PR-PID-006	1 of 2	New	Soft	PLC	Valve - Indication - Remote	-	-	-	-	-	03-RCP-101	-	
B	03-LIT-161	03-L-161	Filter Tank 2	03-LIT-161	Filter Tank 2 Level Transmitter	17805-PR-PID-006	1 of 2	New	AI	PLC	Level - Transmitter -Radar	-	24 VDC	4-20 mA	-	-	Field	03-RCP-101	
B	-	03-L-161	Filter Tank 2	03-LI-161	Filter Tank 2 Level Indication	17805-PR-PID-006	1 of 2	New	Soft	PLC	Level - Indication	-	-	-	-	-	03-RCP-101	-	
B	-	03-L-161	Filter Tank 2	03-LAHH-161	Filter Tank 2 Level Alarm High High	17805-PR-PID-006	1 of 2	New	Soft	PLC	Level - Alarm High High	-	-	-	-	-	03-RCP-101	-	
B	-	03-L-161	Filter Tank 2	03-LAH-161	Filter Tank 2 Level Alarm High	17805-PR-PID-006	1 of 2	New	Soft	PLC	Level - Alarm High	-	-	-	-	-	03-RCP-101	-	
B	-	03-L-161	Filter Tank 2	03-LAL-161	Filter Tank 2 Level Alarm Low	17805-PR-PID-006	1 of 2	New	Soft	PLC	Level - Alarm Low	-	-	-	-	-	03-RCP-101	-	
B	-	03-X-162	Filter Tank 2	03-XV-162	Filter Tank 2 Air Scour Valve	17805-PR-PID-006	1 of 2	New	-	-	Butterfly Valve	-	-	-	-	-	Field	-	
B	03-XV-162	03-X-162	Filter Tank 2	03-XY-162	Filter Tank 2 Air Scour Valve Actuator	17805-PR-PID-006	1 of 2	New	-	-	Valve - Control - Actuator - Electric	120 VAC	-	-	0.43kW	Yes	Field	03-RCP-101	
B	03-RCP-101	03-X-162	Filter Tank 2	03-XHS-162A	Filter Tank 2 Air Scour Valve HOA Switch - Auto	17805-PR-PID-006	1 of 2	New	DI	PLC	Switch - Panel Mounted HOA	-	24 VDC	-	-	No	03-RCP-101	03-RCP-101	
B	03-RCP-101	03-X-162	Filter Tank 2	03-XHS-162B	Filter Tank 2 Air Scour Valve HOA Switch - Hand	17805-PR-PID-006	1 of 2	New	DI	PLC	Switch - Panel Mounted HOA	-	24 VDC	-	-	No	03-RCP-101	03-RCP-101	
B	-	03-X-162	Filter Tank 2	03-XHI-162	Filter Tank 2 Air Scour Valve HOA Switch - Hand/Auto Indication	17805-PR-PID-006	1 of 2	New	Soft	PLC	Switch - Indication - Position	-	-	-	-	-	03-RCP-101	-	
B	03-XV-162	03-X-162	Filter Tank 2	03-XC-162	Filter Tank 2 Air Scour Valve Command Open/Closed	17805-PR-PID-006	1 of 2	New	DO	PLC	Controller - Valve Position Output	-	24 VDC	-	-	No	03-RCP-101	Field	De-energize to close
B	03-XV-162	03-X-162	Filter Tank 2	03-XSC-162	Filter Tank 2 Air Scour Valve Position Switch Closed	17805-PR-PID-006	1 of 2	New	DI	PLC	Valve - Switch - Position	-	24 VDC	-	-	No	Field	03-RCP-101	
B	-	03-X-162	Filter Tank 2	03-XIC-162	Filter Tank 2 Air Scour Valve Position Indication Closed	17805-PR-PID-006	1 of 2	New	Soft	PLC	Valve - Indication - Position	-	-	-	-	-	03-RCP-101	-	
B	03-XV-162	03-X-162	Filter Tank 2	03-XSO-162	Filter Tank 2 Air Scour Valve Position Switch Open	17805-PR-PID-006	1 of 2	New	DI	PLC	Valve - Switch - Position	-	24 VDC	-	-	No	Field	03-RCP-101	
B	-	03-X-162	Filter Tank 2	03-XIO-162	Filter Tank 2 Air Scour Valve Position Indication Open	17805-PR-PID-006	1 of 2	New	Soft	PLC	Valve - Indication - Position	-	-	-	-	-	03-RCP-101	-	
B	-	03-X-162	Filter Tank 2	03-XAD-162	Filter Tank 2 Air Scour Valve Position Discrepancy Alarm	17805-PR-PID-006	1 of 2	New	Soft	PLC	Valve - Alarm - Discrepancy	-	-	-	-	-	03-RCP-101	-	
B	03-XV-162	03-X-162	Filter Tank 2	03-XS-162	Filter Tank 2 Air Scour Valve Fault Signal	17805-PR-PID-006	1 of 2	New	DI	PLC	Valve - Actuator Fault Output	-	24 VDC	-	-	No	Field	03-RCP-101	
B	-	03-X-162	Filter Tank 2	03-XA-162	Filter Tank 2 Air Scour Valve Fault Alarm	17805-PR-PID-006	1 of 2	New	Soft	PLC	Valve - Alarm - Fault	-	-	-	-	-	03-RCP-101	-	
B	03-XV-162	03-X-162	Filter Tank 2	03-XHS-162C	Filter Tank 2 Air Scour Valve Local/Remote Switch	17805-PR-PID-006	1 of 2	New	DI	PLC	Valve - Switch - Local/Remote	-	24 VDC	-	-	No	Field	03-RCP-101	
B	-	03-X-162	Filter Tank 2	03-XAR-162	Filter Tank 2 Air Scour Valve Remote Indication	17805-PR-PID-006	1 of 2	New	Soft	PLC	Valve - Indication - Remote	-	-	-	-	-	03-RCP-101	-	
B	03-PIT-163	03-P-163	Filter Tank 2	03-PT-163	Filter Tank 2 Pressure Transmitter	17805-PR-PID-006	1 of 2	New	AI	PLC	Pressure - Transmitter	-	24 VDC	4-20 mA	-	-	Field	03-RCP-101	
B	-	03-P-163	Filter Tank 2	03-PI-163	Filter Tank 2 Pressure Indication	17805-PR-PID-006	1 of 2	New	Soft	PLC	Pressure - Indication	-	-	-	-	-	03-RCP-101	-	
B	-	03-P-163	Filter Tank 2	03-PAHH-163	Filter Tank 2 Pressure Alarm High High	17805-PR-PID-006	1 of 2	New	Soft	PLC	Pressure - Alarm High High	-	-	-	-	-	03-RCP-101	-	
B	-	03-P-163	Filter Tank 2	03-PAH-163	Filter Tank 2 Pressure Alarm High	17805-PR-PID-006	1 of 2	New	Soft	PLC	Pressure - Alarm High	-	-	-	-	-	03-RCP-101	-	
B	-	03-P-164	Filter Tank 2	03-PI-164	Filter Tank 2 Pressure Gauge	17805-PR-PID-006	1 of 2	New	-	-	Pressure - Gauge	-	-	-	-	-	Field	-	
B	03-RCP-101	03-A-165	Filter Tank 2	03-AHS-165A	Filter Tank 2 Turbidity Sample Solenoid Valve Auto	17805-PR-PID-006	1 of 2	New	DI	PLC	Switch - Panel Mounted HOA	-	24 VDC	-	-	-	03-RCP-101	03-RCP-101	
B	03-RCP-101	03-A-165	Filter Tank 2	03-AHS-165B	Filter Tank 2 Turbidity Sample Solenoid Valve Hand	17805-PR-PID-006	1 of 2	New	DI	PLC	Switch - Panel Mounted HOA	-	24 VDC	-	-	-	03-RCP-101	03-RCP-101	
B	-	03-A-165	Filter Tank 2	03-AHI-165	Filter Tank 2 Turbidity Sample Solenoid Valve Hand/Auto Indication	17805-PR-PID-006	1 of 2	New	Soft	PLC	Switch - Indication - Position	-	-	-	-	-	03-RCP-101	-	
B	-	03-A-165	Filter Tank 2	03-AV-165	Filter Tank 2 Turbidity Sample Solenoid Valve	17805-PR-PID-006	1 of 2	New	-	-	Valve - 2-Way Solenoid	120 VAC	-	-	0.58A	-	Field	-	
B	03-AV-165	03-A-165	Filter Tank 2	03-AC-165	Filter Tank 2 Turbidity Sample Solenoid Valve Position Command	17805-PR-PID-006	1 of 2	New	DO	PLC	Controller - Valve Position Output	-	24 VDC	-	-	-	03-RCP-101	Field	
B	03-AIC-150	03-A-165	Filter Tank 2	03-AE-165	Filter Tank 2 Turbidity Analyzer	17805-PR-PID-006	1 of 2	New	-	PLC	Turbidity - Analyzer	-	-	-	-	-	Field	03-AIC-150	
B	03-AIC-150	03-A-165	Filter Tank 2	03-AIT-165	Filter Tank 2 Turbidity Transmitter - Signal	17805-PR-PID-006	1 of 2	New	AI	PLC	Turbidity - Transmitter	-	24 VDC	4-20 mA	-	-	Field	03-RCP-101	03-AIT-165 Signal from common Turbidity Controller 03-AIC-150
B	-	03-A-165	Filter Tank 2	03-AI-165	Filter Tank 2 Turbidity Indication	17805-PR-PID-006	1 of 2	New	Soft	PLC	Turbidity - Indication	-	-	-	-	-	03-RCP-101	-	
B	-	03-A-165	Filter Tank 2	03-AAH-165	Filter Tank 2 Turbidity Alarm High	17805-PR-PID-006	1 of 2	New	Soft	PLC	Turbidity - Alarm High	-	-	-	-	-	03-RCP-101	-	
B	-	03-X-180	Filter Tank 3	03-XV-180	Filter Tank 3 Inlet Valve	17805-PR-PID-006	1 of 2	New	-	-	Butterfly Valve	-	-	-	-	-	Field	-	
B	03-XV-180	03-X-180	Filter Tank 3	03-XY-180	Filter Tank 3 Inlet Valve Actuator	17805-PR-PID-006	1 of 2	New	-	-	Valve - Control - Actuator - Electric	120 VAC	-	-	0.43kW	No	Field	03-RCP-101	
B	03-RCP-101	03-X-180	Filter Tank 3	03-XHS-180A	Filter Tank 3 Inlet Valve HOA Switch - Auto	17805-PR-PID-006	1 of 2	New	DI	PLC	Switch - Panel Mounted HOA	-	24 VDC	-	-	No	03-RCP-101	03-RCP-101	
B	03-RCP-101	03-X-180	Filter Tank 3	03-XHS-180B	Filter Tank 3 Inlet Valve HOA Switch - Hand	17805-PR-PID-006	1 of 2	New	DI	PLC	Switch - Panel Mounted HOA	-	24 VDC	-	-	No	03-RCP-101	03-RCP-101	
B	-	03-X-180	Filter Tank 3	03-XHI-180	Filter Tank 3 Inlet Valve HOA Switch - Hand/Auto Indication	17805-PR-PID-006	1 of 2	New	Soft	PLC	Switch - Indication - Position	-	-	-	-	-	03-RCP-101	-	
B	03-XV-180	03-X-180	Filter Tank 3	03-XC-180	Filter Tank 3 Inlet Valve Command Open/Closed	17805-PR-PID-006	1 of 2	New	DO	PLC	Controller - Valve Position Output	-	24 VDC	-	-	No	03-RCP-101	Field	De-energize to close
B	03-XV-180	03-X-180	Filter Tank 3	03-XSC-180	Filter Tank 3 Inlet Valve Position Switch Closed	17805-PR-PID-006	1 of 2	New	DI	PLC	Valve - Switch - Position	-	24 VDC	-	-	No	Field	03-RCP-101	
B	-	03-X-180	Filter Tank 3	03-XIC-180	Filter Tank 3 Inlet Valve Position Indication Closed	17805-PR-PID-006	1 of 2	New	Soft	PLC	Valve - Indication - Position	-	-	-	-	-	03-RCP-101	-	
B	03-XV-180	03-X-180	Filter Tank 3	03-XSO-180	Filter Tank 3 Inlet Valve Position Switch Open	17805-PR-PID-006	1 of 2	New	DI	PLC	Valve - Switch - Position	-	24 VDC	-	-	No	Field	03-RCP-101	
B	-	03-X-180	Filter Tank 3	03-XIO-180	Filter Tank 3 Inlet Valve Position Indication Open	17805-PR-PID-006	1 of 2	New	Soft	PLC	Valve - Indication - Position	-	-	-	-	-	03-RCP-101	-	
B	-	03-X-180	Filter Tank 3	03-XAD-180	Filter Tank 3 Inlet Valve Position Discrepancy Alarm	17805-PR-PID-006	1 of 2	New	Soft	PLC	Valve - Alarm - Discrepancy	-	-	-	-	-	03-RCP-101	-	
B	03-XV-180	03-X-180	Filter Tank 3	03-XS-180	Filter Tank 3 Inlet Valve Fault Signal	17805-PR-PID-006	1 of 2	New	DI	PLC	Valve - Actuator Fault Output	-	24 VDC	-	-	No	Field	03-RCP-101	
B	-	03-X-180	Filter Tank 3	03-XA-180	Filter Tank 3 Inlet Valve Fault Alarm	17805-PR-PID-006	1 of 2	New	Soft	PLC	Valve - Alarm - Fault	-	-	-	-	-	03-RCP-101	-	
B	03-XV-180	03-X-180	Filter Tank 3	03-XHS-180C	Filter Tank 3 Inlet Valve Local/Remote Switch	17805-PR-PID-006	1 of 2	New	DI	PLC	Valve - Switch - Local/Remote	-	24 VDC	-	-	No	Field	03-RCP-101	
B	-	03-X-180	Filter Tank 3	03-XAR-180	Filter Tank 3 Inlet Valve Remote Indication	17805-PR-PID-006	1 of 2	New	Soft	PLC	Valve - Indication - Remote	-	-	-	-	-	03-RCP-101	-	
B	03-LIT-181	03-L-181	Filter Tank 3	03-LIT-181	Filter Tank 3 Level Transmitter	17805-PR-PID-006	1 of 2	New	AI	PLC	Level - Transmitter -Radar	-	24 VDC	4-20 mA	-	-	Field	03-RCP-101	
B	-	03-L-181	Filter Tank 3	03-LI-181	Filter Tank 3 Level Indication	17805-PR-PID-006	1 of 2	New	Soft	PLC	Level - Indication	-	-	-	-	-	03-RCP-101	-	
B	-	03-L-181	Filter Tank 3	03-LAHH-181	Filter Tank 3 Level Alarm High High	17805-PR-PID-006	1 of 2	New	Soft	PLC	Level - Alarm High High	-	-	-	-	-	03-RCP-101	-	
B	-	03-L-181	Filter Tank 3	03-LAH-181	Filter Tank 3 Level Alarm High	17805-PR-PID-006	1 of 2	New	Soft	PLC	Level - Alarm High	-	-	-	-	-	03-RCP-101	-	
B	-	03-L-181	Filter Tank 3	03-LAL-181	Filter Tank 3 Level Alarm Low	17805-PR-PID-006	1 of 2	New	Soft	PLC	Level - Alarm Low	-	-	-	-	-	03-RCP-101	-	
B	-	03-X-182	Filter Tank 3	03-XV-182	Filter Tank 3 Air Scour Valve	17805-PR-PID-006	1 of 2	New	-	-	Butterfly Valve	-	-	-	-	-	Field	-	
B	03-XV-182	03-X-182	Filter Tank 3	03-XY-182	Filter Tank 3 Air Scour Valve Actuator	17805-PR-PID-006	1 of 2	New	-	-	Valve - Control - Actuator - Electric	120 VAC	-	-	0.43kW	Yes	Field	03-RCP-101	
B	03-RCP-101	03-X-182	Filter Tank 3	03-XHS-182A	Filter Tank 3 Air Scour Valve HOA Switch - Auto	17805-PR-PID-006	1 of 2	New	DI	PLC	Switch - Panel Mounted HOA	-	24 VDC	-	-	No	03-RCP-101	03-RCP-101	
B	03-RCP-101	03-X-182	Filter Tank 3	03-XHS-182B	Filter Tank 3 Air Scour Valve HOA Switch - Hand	17805-PR-PID-006	1 of 2	New	DI	PLC	Switch - Panel Mounted HOA	-	24 VDC	-	-	No	03-RCP-101	03-RCP-101	
B	-	03-X-182	Filter Tank 3	03-XHI-182	Filter Tank 3 Air Scour Valve HOA Switch - Hand/Auto Indication	17805-PR-PID-006	1 of 2	New	Soft	PLC	Switch - Indication - Position	-	-	-	-	-	03-RCP-101	-	
B	03-XV-182	03-X-182	Filter Tank 3	03-XC-182	Filter Tank 3 Air Scour Valve Command Open/Closed	17805-PR-PID-006	1 of 2	New	DO	PLC	Controller - Valve Position Output	-	24 VDC	-	-	No	03-RCP-101	Field	De-energize to close
B	03-XV-182	03-X-182	Filter Tank 3	03-XSC-182	Filter Tank 3 Air Scour Valve Position Switch Closed	17805-PR-PID-006	1 of 2	New	DI	PLC	Valve - Switch - Position	-	24 VDC	-	-	No	Field	03-RCP-101	
B	-	03-X-182	Filter Tank 3	03-XIC-182	Filter Tank 3 Air Scour Valve Position Indication Closed	17805-PR-PID-006	1 of 2	New	Soft	PLC	Valve - Indication - Position	-	-	-	-	-	03-RCP-101	-	
B	03-XV-182	03-X-182	Filter Tank 3	03-XSO-182	Filter Tank 3 Air Scour Valve Position Switch Open	17805-PR-PID-006	1 of 2	New	DI	PLC	Valve - Switch - Position	-	24 VDC	-	-	No	Field	03-RCP-101	
B	-	03-X-182	Filter Tank 3	03-XIO-182	Filter Tank 3 Air Scour Valve Position Indication Open	17805-PR-PID-006	1 of 2	New	Soft	PLC	Valve - Indication - Position	-	-	-	-	-	03-RCP-101	-	
B	-	03-X-182	Filter Tank 3	03-XAD-182	Filter Tank 3 Air Scour Valve Position Discrepancy Alarm	17805-PR-PID-006	1 of 2	New	Soft	PLC	Valve - Alarm - Discrepancy	-	-	-	-	-	03-RCP-101	-	
B	03-XV-182	03-X-182	Filter Tank 3	03-XS-182	Filter Tank 3 Air Scour Valve Fault Signal	17805-PR-PID-006	1 of 2	New	DI	PLC	Valve - Actuator Fault Output	-	24 VDC	-	-	No	Field	03-RCP-101	

INSTRUMENT INDEX

Rev	Equipment No	Loop Number	Loop Service	Tag Number	Tag Description	P&ID	Sheet	Status	IO Type Name	System	Instrument Type	Power Voltage	Control Voltage	Signal	Power / Current	UPS Powered	Location	Wired To/From	Notes
B	-	03-X-182	Filter Tank 3	03-XA-182	Filter Tank 3 Air Scour Valve Fault Alarm	17805-PR-PID-006	1 of 2	New	Soft	PLC	Valve - Alarm - Fault	-	-	-	-	-	03-RCP-101	-	
B	03-XV-182	03-X-182	Filter Tank 3	03-XHS-182C	Filter Tank 3 Air Scour Valve Local/Remote Switch	17805-PR-PID-006	1 of 2	New	DI	PLC	Valve - Switch - Local/Remote	-	24 VDC	-	-	No	Field	03-RCP-101	
B	-	03-X-182	Filter Tank 3	03-XAR-182	Filter Tank 3 Air Scour Valve Remote Indication	17805-PR-PID-006	1 of 2	New	Soft	PLC	Valve - Indication - Remote	-	-	-	-	-	03-RCP-101	-	
B	03-PIT-183	03-P-183	Filter Tank 3	03-PT-183	Filter Tank 3 Pressure Transmitter	17805-PR-PID-006	1 of 2	New	AI	PLC	Pressure - Transmitter	-	24 VDC	4-20 mA	-	-	Field	03-RCP-101	
B	-	03-P-183	Filter Tank 3	03-PI-183	Filter Tank 3 Pressure Indication	17805-PR-PID-006	1 of 2	New	Soft	PLC	Pressure - Indication	-	-	-	-	-	03-RCP-101	-	
B	-	03-P-183	Filter Tank 3	03-PAHH-183	Filter Tank 3 Pressure Alarm High High	17805-PR-PID-006	1 of 2	New	Soft	PLC	Pressure - Alarm High High	-	-	-	-	-	03-RCP-101	-	
B	-	03-P-183	Filter Tank 3	03-PAH-183	Filter Tank 3 Pressure Alarm High	17805-PR-PID-006	1 of 2	New	Soft	PLC	Pressure - Alarm High	-	-	-	-	-	03-RCP-101	-	
B	-	03-P-184	Filter Tank 3	03-PI-184	Filter Tank 3 Pressure Gauge	17805-PR-PID-006	1 of 2	New	-	-	Pressure - Gauge	-	-	-	-	-	Field	-	
B	03-RCP-101	03-A-185	Filter Tank 3	03-AHS-185A	Filter Tank 3 Turbidity Sample Solenoid Valve Auto	17805-PR-PID-006	1 of 2	New	DI	PLC	Switch - Panel Mounted HOA	-	24 VDC	-	-	-	03-RCP-101	03-RCP-101	
B	03-RCP-101	03-A-185	Filter Tank 3	03-AHS-185B	Filter Tank 3 Turbidity Sample Solenoid Valve Hand	17805-PR-PID-006	1 of 2	New	DI	PLC	Switch - Panel Mounted HOA	-	24 VDC	-	-	-	03-RCP-101	03-RCP-101	
B	-	03-A-185	Filter Tank 3	03-AHI-185	Filter Tank 3 Turbidity Sample Solenoid Valve Hand/Auto Indication	17805-PR-PID-006	1 of 2	New	Soft	PLC	Switch - Indication - Position	-	-	-	-	-	03-RCP-101	-	
B	-	03-A-185	Filter Tank 3	03-AV-185	Filter Tank 3 Turbidity Sample Solenoid Valve	17805-PR-PID-006	1 of 2	New	-	-	Valve - 2-Way Solenoid	120 VAC	-	-	0.58A	-	Field	-	
B	03-AV-185	03-A-185	Filter Tank 3	03-AC-185	Filter Tank 3 Turbidity Sample Solenoid Valve Position Command	17805-PR-PID-006	1 of 2	New	DO	PLC	Controller - Valve Position Output	-	24 VDC	-	-	-	03-RCP-101	Field	
B	03-AIC-150	03-A-185	Filter Tank 3	03-AE-185	Filter Tank 3 Turbidity Analyzer	17805-PR-PID-006	1 of 2	New	-	PLC	Turbidity - Analyzer	-	-	-	-	-	Field	03-AIC-150	
B	03-AIC-150	03-A-185	Filter Tank 3	03-AIT-185	Filter Tank 3 Turbidity Transmitter - Signal	17805-PR-PID-006	1 of 2	New	AI	PLC	Turbidity - Transmitter	-	24 VDC	4-20 mA	-	-	Field	03-RCP-101	03-AIT-185 Signal from common Turbidity Controller 03-AIC-150
B	-	03-A-185	Filter Tank 3	03-AI-185	Filter Tank 3 Turbidity Indication	17805-PR-PID-006	1 of 2	New	Soft	PLC	Turbidity - Indication	-	-	-	-	-	03-RCP-101	-	
B	-	03-A-185	Filter Tank 3	03-AAH-185	Filter Tank 3 Turbidity Alarm High	17805-PR-PID-006	1 of 2	New	Soft	PLC	Turbidity - Alarm High	-	-	-	-	-	03-RCP-101	-	
B	-	03-L-146A	Filter Tank 1 Effluent to Clearwell	03-LV-146A	Filter Tank 1 Effluent to Clearwell Valve	17805-PR-PID-006	2 of 2	New	-	-	Valve - Control - Butterfly	-	-	-	-	-	Field	-	
B	03-LV-146A	03-L-146A	Filter Tank 1 Effluent to Clearwell	03-LY-146A	Filter Tank 1 Effluent to Clearwell Valve Actuator	17805-PR-PID-006	2 of 2	New	-	-	Valve - Control - Actuator - Electric	120 VAC	-	-	0.43kW	Yes	Field	03-RCP-101	
B	03-LV-146A	03-L-146A	Filter Tank 1 Effluent to Clearwell	03-LC-146A	Filter Tank 1 Effluent to Clearwell Valve Position Output	17805-PR-PID-006	2 of 2	New	AO	PLC	Controller - Position Output	-	-	4-20 mA	-	-	03-RCP-101	Field	
B	03-LV-146A	03-L-146A	Filter Tank 1 Effluent to Clearwell	03-LS-146A	Filter Tank 1 Effluent to Clearwell Valve Fault	17805-PR-PID-006	2 of 2	New	DI	PLC	Valve - Actuator - Fault	-	24 VDC	-	-	No	Field	03-RCP-101	
B	-	03-L-146A	Filter Tank 1 Effluent to Clearwell	03-LSA-146A	Filter Tank 1 Effluent to Clearwell Valve Fault Alarm	17805-PR-PID-006	2 of 2	New	Soft	PLC	Valve - Alarm - Discrete	-	-	-	-	-	03-RCP-101	-	
B	-	03-L-146A	Filter Tank 1 Effluent to Clearwell	03-LAR-146A	Filter Tank 1 Effluent to Clearwell Valve Remote Indication	17805-PR-PID-006	2 of 2	New	Soft	PLC	Valve - Indication - Remote	-	-	-	-	-	03-RCP-101	-	
B	-	03-L-146B	Filter Tank 1 Rinse to Waste	03-LV-146B	Filter Tank 1 Rinse to Waste Valve	17805-PR-PID-006	2 of 2	New	-	-	Valve - Control - Butterfly	-	-	-	-	-	Field	-	
B	03-LV-146B	03-L-146B	Filter Tank 1 Rinse to Waste	03-LY-146B	Filter Tank 1 Rinse to Waste Valve Actuator	17805-PR-PID-006	2 of 2	New	-	-	Valve - Control - Actuator - Electric	120 VAC	-	-	0.43kW	Yes	Field	03-RCP-101	
B	03-LV-146B	03-L-146B	Filter Tank 1 Rinse to Waste	03-LC-146B	Filter Tank 1 Rinse to Waste Valve Position Output	17805-PR-PID-006	2 of 2	New	AO	PLC	Controller - Position Output	-	-	4-20 mA	-	-	03-RCP-101	Field	
B	03-LV-146B	03-L-146B	Filter Tank 1 Rinse to Waste	03-LS-146B	Filter Tank 1 Rinse to Waste Valve Fault	17805-PR-PID-006	2 of 2	New	DI	PLC	Valve - Actuator - Fault	-	24 VDC	-	-	No	Field	03-RCP-101	
B	-	03-L-146B	Filter Tank 1 Rinse to Waste	03-LSA-146B	Filter Tank 1 Rinse to Waste Valve Fault Alarm	17805-PR-PID-006	2 of 2	New	Soft	PLC	Controller - Alarm - Discrete	-	-	-	-	-	03-RCP-101	-	
B	03-LV-146B	03-L-146B	Filter Tank 1 Rinse to Waste	03-ZT-146B	Filter Tank 1 Rinse to Waste Valve Position Feedback Signal	17805-PR-PID-006	2 of 2	New	AI	PLC	Valve - Position Feedback	-	-	4-20 mA	-	-	Field	03-RCP-101	
B	-	03-L-146B	Filter Tank 1 Rinse to Waste	03-ZI-146B	Filter Tank 1 Rinse to Waste Valve Position Feedback Indication	17805-PR-PID-006	2 of 2	New	Soft	PLC	Valve - Position Indication	-	-	-	-	-	03-RCP-101	-	
B	03-LV-146B	03-L-146B	Filter Tank 1 Rinse to Waste	03-LHS-146B	Filter Tank 1 Rinse to Waste Valve Local/Remote Switch	17805-PR-PID-006	2 of 2	New	DI	PLC	Valve - Switch - Local/Remote	-	24 VDC	-	-	No	Field	03-RCP-101	
B	-	03-L-146B	Filter Tank 1 Rinse to Waste	03-LAR-146B	Filter Tank 1 Rinse to Waste Valve Remote Indication	17805-PR-PID-006	2 of 2	New	Soft	PLC	Valve - Indication - Remote	-	-	-	-	-	03-RCP-101	-	
B	-	03-X-147	Filter Tank 1 Backwash Supply	03-XV-147	Filter Tank 1 Backwash Supply Valve	17805-PR-PID-006	2 of 2	New	-	-	Valve - Control - Butterfly	-	-	-	-	-	Field	-	
B	03-XV-147	03-X-147	Filter Tank 1 Backwash Supply	03-XY-147	Filter Tank 1 Backwash Supply Valve Actuator	17805-PR-PID-006	2 of 2	New	-	-	Valve - Control - Actuator - Electric	120 VAC	-	-	0.43kW	Yes	Field	03-RCP-101	
B	03-XV-147	03-X-147	Filter Tank 1 Backwash Supply	03-XC-147	Filter Tank 1 Backwash Supply Valve Position Output	17805-PR-PID-006	2 of 2	New	DO	PLC	Controller - Position Output	-	24 VDC	-	-	-	03-RCP-101	Field	De-energize to close
B	03-XV-147	03-X-147	Filter Tank 1 Backwash Supply	03-XS-147	Filter Tank 1 Backwash Supply Valve Fault	17805-PR-PID-006	2 of 2	New	DI	PLC	Valve - Actuator - Fault	-	24 VDC	-	-	No	Field	03-RCP-101	
B	-	03-X-147	Filter Tank 1 Backwash Supply	03-XSA-147	Filter Tank 1 Backwash Supply Valve Fault Alarm	17805-PR-PID-006	2 of 2	New	Soft	PLC	Controller - Alarm - Discrete	-	-	-	-	-	03-RCP-101	-	
B	03-XV-147	03-X-147	Filter Tank 1 Backwash Supply	03-XHS-147	Filter Tank 1 Backwash Supply Valve Local/Remote Switch	17805-PR-PID-006	2 of 2	New	DI	PLC	Valve - Switch - Local/Remote	-	24 VDC	-	-	No	Field	03-RCP-101	
B	-	03-X-147	Filter Tank 1 Backwash Supply	03-XAR-147	Filter Tank 1 Backwash Supply Valve Remote Indication	17805-PR-PID-006	2 of 2	New	Soft	PLC	Valve - Indication - Remote	-	-	-	-	-	03-RCP-101	-	
B	-	03-L-166A	Filter Tank 2 Effluent to Clearwell	03-LV-166A	Filter Tank 2 Effluent to Clearwell Valve	17805-PR-PID-006	2 of 2	New	-	-	Valve - Control - Butterfly	-	-	-	-	-	Field	-	
B	03-LV-166A	03-L-166A	Filter Tank 2 Effluent to Clearwell	03-LY-166A	Filter Tank 2 Effluent to Clearwell Valve Actuator	17805-PR-PID-006	2 of 2	New	-	-	Valve - Control - Actuator - Electric	120 VAC	-	-	0.43kW	Yes	Field	03-RCP-101	
B	03-LV-166A	03-L-166A	Filter Tank 2 Effluent to Clearwell	03-LC-166A	Filter Tank 2 Effluent to Clearwell Valve Position Output	17805-PR-PID-006	2 of 2	New	AO	PLC	Controller - Position Output	-	-	4-20 mA	-	-	03-RCP-101	Field	
B	03-LV-166A	03-L-166A	Filter Tank 2 Effluent to Clearwell	03-LS-166A	Filter Tank 2 Effluent to Clearwell Valve Fault	17805-PR-PID-006	2 of 2	New	DI	PLC	Valve - Actuator - Fault	-	24 VDC	-	-	No	Field	03-RCP-101	
B	-	03-L-166A	Filter Tank 2 Effluent to Clearwell	03-LSA-166A	Filter Tank 2 Effluent to Clearwell Valve Fault Alarm	17805-PR-PID-006	2 of 2	New	Soft	PLC	Controller - Alarm - Discrete	-	-	-	-	-	03-RCP-101	-	
B	03-LV-166A	03-L-166A	Filter Tank 2 Effluent to Clearwell	03-ZT-166A	Filter Tank 2 Effluent to Clearwell Valve Position Feedback Signal	17805-PR-PID-006	2 of 2	New	AI	PLC	Valve - Position Feedback	-	-	4-20 mA	-	-	Field	03-RCP-101	
B	-	03-L-166A	Filter Tank 2 Effluent to Clearwell	03-ZI-166A	Filter Tank 2 Effluent to Clearwell Valve Position Feedback Indication	17805-PR-PID-006	2 of 2	New	Soft	PLC	Valve - Position Indication	-	-	-	-	-	03-RCP-101	-	
B	03-LV-166A	03-L-166A	Filter Tank 2 Effluent to Clearwell	03-LHS-166A	Filter Tank 2 Effluent to Clearwell Valve Local/Remote Switch	17805-PR-PID-006	2 of 2	New	DI	PLC	Valve - Switch - Local/Remote	-	24 VDC	-	-	No	Field	03-RCP-101	
B	-	03-L-166A	Filter Tank 2 Effluent to Clearwell	03-LAR-166A	Filter Tank 2 Effluent to Clearwell Valve Remote Indication	17805-PR-PID-006	2 of 2	New	Soft	PLC	Valve - Indication - Remote	-	-	-	-	-	03-RCP-101	-	
B	-	03-L-166B	Filter Tank 2 Rinse to Waste	03-LV-166B	Filter Tank 2 Rinse to Waste Valve	17805-PR-PID-006	2 of 2	New	-	-	Valve - Control - Butterfly	-	-	-	-	-	Field	-	
B	03-LV-166B	03-L-166B	Filter Tank 2 Rinse to Waste	03-LY-166B	Filter Tank 2 Rinse to Waste Valve Actuator	17805-PR-PID-006	2 of 2	New	-	-	Valve - Control - Actuator - Electric	120 VAC	-	-	0.43kW	Yes	Field	03-RCP-101	
B	03-LV-166B	03-L-166B	Filter Tank 2 Rinse to Waste	03-LC-166B	Filter Tank 2 Rinse to Waste Valve Position Output	17805-PR-PID-006	2 of 2	New	AO	PLC	Controller - Position Output	-	-	4-20 mA	-	-	03-RCP-101	Field	
B	03-LV-166B	03-L-166B	Filter Tank 2 Rinse to Waste	03-LS-166B	Filter Tank 2 Rinse to Waste Valve Fault	17805-PR-PID-006	2 of 2	New	DI	PLC	Valve - Actuator - Fault	-	24 VDC	-	-	No	Field	03-RCP-101	
B	-	03-L-166B	Filter Tank 2 Rinse to Waste	03-LSA-166B	Filter Tank 2 Rinse to Waste Valve Fault Alarm	17805-PR-PID-006	2 of 2	New	Soft	PLC	Controller - Alarm - Discrete	-	-	-	-	-	03-RCP-101	-	
B	03-LV-166B	03-L-166B	Filter Tank 2 Rinse to Waste	03-ZT-166B	Filter Tank 2 Rinse to Waste Valve Position Feedback Signal	17805-PR-PID-006	2 of 2	New	AI	PLC	Valve - Position Feedback	-	-	4-20 mA	-	-	Field	03-RCP-101	
B	-	03-L-166B	Filter Tank 2 Rinse to Waste	03-ZI-166B	Filter Tank 2 Rinse to Waste Valve Position Feedback Indication	17805-PR-PID-006	2 of 2	New	Soft	PLC	Valve - Position Indication	-	-	-	-	-	03-RCP-101	-	
B	03-LV-166B	03-L-166B	Filter Tank 2 Rinse to Waste	03-LHS-166B	Filter Tank 2 Rinse to Waste Valve Local/Remote Switch	17805-PR-PID-006	2 of 2	New	DI	PLC	Valve - Switch - Local/Remote	-	24 VDC	-	-	No	Field	03-RCP-101	
B	-	03-L-166B	Filter Tank 2 Rinse to Waste	03-LAR-166B	Filter Tank 2 Rinse to Waste Valve Remote Indication	17805-PR-PID-006	2 of 2	New	Soft	PLC	Valve - Indication - Remote	-	-	-	-	-	03-RCP-101	-	
B	-	03-X-167	Filter Tank 2 Backwash Supply	03-XV-167	Filter Tank 2 Backwash Supply Valve	17805-PR-PID-006	2 of 2	New	-	-	Valve - Control - Butterfly	-	-	-	-	-	Field	-	
B	03-XV-167	03-X-167	Filter Tank 2 Backwash Supply	03-XY-167	Filter Tank 2 Backwash Supply Valve Actuator	17805-PR-PID-006	2 of 2	New	-	-	Valve - Control - Actuator - Electric	120 VAC	-	-	0.43kW	Yes	Field	03-RCP-101	
B	03-XV-167	03-X-167	Filter Tank 2 Backwash Supply	03-XC-167	Filter Tank 2 Backwash Supply Valve Position Output	17805-PR-PID-006	2 of 2	New	DO	PLC	Controller - Position Output	-	24 VDC	-	-	-	03-RCP-101	Field	De-energize to close
B	03-XV-167	03-X-167	Filter Tank 2 Backwash Supply	03-ZSC-167	Filter Tank 2 Backwash Supply Valve Position Switch Closed	17805-PR-PID-006	2 of 2	New	DI	PLC	Valve - Switch - Position	-	24 VDC	-	-	No	Field	03-RCP-101	
B	-	03-X-167	Filter Tank 2 Backwash Supply	03-ZIC-167	Filter Tank 2 Backwash Supply Valve Position Indication Closed	17805-PR-PID-006	2 of 2	New	Soft	PLC	Valve - Indication - Position	-	-	-	-	-	03-RCP-101	-	
B	03-XV-167	03-X-167	Filter Tank 2 Backwash Supply	03-ZSO-167	Filter Tank 2 Backwash Supply Valve Position Switch Open	17805-PR-PID-006	2 of 2	New	DI	PLC	Valve - Switch - Position	-	24 VDC	-	-	No	Field	03-RCP-101	
B	-	03-X-167	Filter Tank 2 Backwash Supply	03-ZIO-167	Filter Tank 2 Backwash Supply Valve Position Indication Open	17805-PR-PID-006	2 of 2	New	Soft	PLC	Valve - Indication - Position	-	-	-	-	-	03-RCP-101	-	
B	03-XV-167	03-X-167	Filter Tank 2 Backwash Supply	03-XS-167	Filter Tank 2 Backwash Supply Valve Fault	17805-PR-PID-006	2 of 2	New	DI	PLC	Valve - Actuator - Fault	-	24 VDC	-	-	No	Field	03-RCP-101	
B	-	03-X-167	Filter Tank 2 Backwash Supply	03-XSA-167	Filter Tank 2 Backwash Supply Valve Fault Alarm	17805-PR-PID-006	2 of 2	New	Soft	PLC	Controller - Alarm - Discrete	-	-	-	-	-	03-RCP-101	-	
B	03-XV-167	03-X-167	Filter Tank 2 Backwash Supply	03-XHS-167	Filter Tank 2 Backwash Supply Valve Local/Remote Switch	17805-PR-PID-006	2 of 2	New	DI	PLC	Valve - Switch - Local/Remote	-	24 VDC	-	-	No	Field	03-RCP-101	
B	-	03-X-167	Filter Tank 2 Backwash Supply	03-XAR-167	Filter Tank 2 Backwash Supply Valve Remote Indication	17805-PR-PID-006	2 of 2	New	Soft	PLC	Valve - Indication - Remote	-	-	-	-	-	03-RCP-101	-	
B	-	03-L-186A	Filter Tank 3 Effluent to Clearwell	03-LV-186A	Filter Tank 3 Effluent to Clearwell Valve	17805-PR-PID-006	2 of 2	New	-	-	Valve - Control - Butterfly	-	-	-	-	-	Field	-	
B	03-LV-186A	03-L-186A	Filter Tank 3 Effluent to Clearwell	03-LY-186A	Filter Tank 3 Effluent to Clearwell Valve Actuator	17805-PR-PID-006	2 of 2	New	-	-	Valve - Control - Actuator - Electric	120 VAC	-	-	0.43kW	Yes	Field	03-RCP-101	
B	03-LV-186A	03-L-186A	Filter Tank 3 Effluent to Clearwell	03-LC-186A	Filter Tank 3 Effluent to Clearwell Valve Position Output	17805-PR-PID-006	2 of 2	New	AO	PLC	Controller - Position Output	-	-	4-20 mA	-	-	03-RCP-101	Field	
B	03-LV-186A	03-L-186A	Filter Tank 3 Effluent to Clearwell	03-LS-186A	Filter Tank 3 Effluent to Clearwell Valve Fault	17805-PR-PID-006	2 of 2	New	DI	PLC	Valve - Actuator - Fault	-	24 VDC	-	-	No	Field	03-RCP-101	
B	-	03-L-186A	Filter Tank 3 Effluent to Clearwell	03-LSA-186A	Filter Tank 3 Effluent to Clearwell Valve Fault Alarm	17805-PR-PID-006	2 of 2	New	Soft	PLC	Controller - Alarm - Discrete	-	-	-	-	-	03-RCP-101	-	
B	03-LV-186A	03-L-186A	Filter Tank 3 Effluent to Clearwell	03-ZT-186A	Filter Tank 3 Effluent to Clearwell Valve Position Feedback Signal	17805-PR-PID-006	2 of 2	New	AI	PLC	Valve - Position Feedback	-	-	4-20 mA	-	-	Field	03-RCP-101	
B	-	03-L-186A	Filter Tank 3 Effluent to Clearwell	03-ZI-186A	Filter Tank 3 Effluent to Clearwell Valve Position Feedback Indication	17805-PR-PID-006	2 of 2	New	Soft	PLC	Valve - Position Indication	-	-	-	-	-	03-RCP-101	-	
B	03-LV-186A	03-L-186A	Filter Tank 3 Effluent to Clearwell	03-LHS-186A	Filter Tank 3 Effluent to Clearwell Valve Local/Remote Switch	17805-PR-PID-006	2 of 2	New	DI	PLC	Valve - Switch - Local/Remote	-	24 VDC	-	-	No	Field	03-RCP-101	
B	-	03-L-186A	Filter Tank 3 Effluent to Clearwell	03-LAR-186A	Filter Tank 3 Effluent to Clearwell Valve Remote Indication	17805-PR-PID-006	2 of 2	New	Soft	PLC	Valve - Indication - Remote	-	-	-	-	-	03-RCP-101	-	
B	-	03-L-186B	Filter Tank 3 Rinse to Waste	03-LV-186B	Filter Tank 3 Rinse to Waste Valve	17805-PR-PID-006	2 of 2	New	-	-	Valve - Control - Butterfly	-	-	-	-	-	Field	-	
B	03-LV-186B	03-L-186B	Filter Tank 3 Rinse to Waste	03-LY-186B	Filter Tank 3 Rinse to Waste Valve Actuator	17805-PR-PID-006	2 of 2	New	-	-	Valve - Control - Actuator - Electric	120 VAC	-	-	0.43kW	Yes	Field	03-RCP-101	
B	03-LV-186B	03-L-186B	Filter Tank 3 Rinse to Waste	03-LC-186B	Filter Tank 3 Rinse to Waste Valve Position Output	17805-PR-PID-006	2 of 2	New	AO	PLC	Controller - Position Output	-	-	4-20 mA	-	-	03-RCP-101	Field	
B	03-LV-186B	03-L-186B	Filter Tank 3 Rinse to Waste	03-LS-186B	Filter Tank 3 Rinse to Waste Valve Fault	17805-PR-PID-006	2 of 2	New	DI	PLC	Valve - Actuator - Fault	-	24 VDC	-	-	No	Field	03-RCP-101	
B	-	03-L-186B	Filter Tank 3 Rinse to Waste	03-LSA-186B	Filter Tank 3 Rinse to Waste Valve Fault Alarm	17805-PR-PID-006	2 of 2	New	Soft	PLC	Controller - Alarm - Discrete	-	-	-	-	-	03-RCP-101	-	
B	03-LV-186B	03-L-186B	Filter Tank 3 Rinse to Waste	03-ZT-186B	Filter Tank 3 Rinse to Waste Valve Position Feedback Signal	17805-PR-PID-006	2 of 2	New	AI	PLC	Valve - Position Feedback	-	-	4-20 mA	-	-	Field	03-RCP-101	
B	-	03-L-186B	Filter Tank 3 Rinse to Waste	03-ZI-186B	Filter Tank 3 Rinse to Waste Valve Position Feedback Indication	17805-PR-PID-006	2 of 2	New	Soft	PLC	Valve - Position Indication	-	-	-	-	-	03-RCP-101	-	
B	03-LV-186B	03-L-186B	Filter Tank 3 Rinse to Waste	03-LHS-186B	Filter Tank 3 Rinse to Waste Valve Local/Remote Switch	17805-PR-PID-006	2 of 2	New	DI	PLC	Valve - Switch - Local/Remote	-	24 VDC	-	-	No	Field	03-RCP-101	
B	-	03-L-186B	Filter Tank 3 Rinse to Waste	03-LAR-186B	Filter Tank 3 Rinse to Waste Valve Remote Indication	17805-PR-PID-006	2 of 2	New	Soft	PLC	Valve - Indication - Remote	-	-	-	-	-	03-RCP-101	-	
B	-	03-X-187	Filter Tank 3 Backwash Supply	03-XV-187	Filter Tank 3 Backwash Supply Valve	17805-PR-PID-006	2 of 2	New	-	-	Valve - Control - Butterfly	-	-	-	-	-	Field	-	
B	03-XV-187	03-X-187	Filter Tank 3 Backwash Supply	03-XY-187	Filter Tank 3 Backwash Supply Valve Actuator	17805-PR-PID-006	2 of 2	New	-	-	Valve - Control - Actuator - Electric	120 VAC	-	-	0.43kW	Yes	Field	03-RCP-101	

INSTRUMENT INDEX

Rev	Equipment No	Loop Number	Loop Service	Tag Number	Tag Description	P&ID	Sheet	Status	IO Type Name	System	Instrument Type	Power Voltage	Control Voltage	Signal	Power / Current	UPS Powered	Location	Wired To/From	Notes
B	03-XV-187	03-X-187	Filter Tank 3 Backwash Supply	03-XC-187	Filter Tank 3 Backwash Supply Valve Position Output	17805-PR-PID-006	2 of 2	New	DO	PLC	Controller - Position Output	-	24 VDC	-	-	-	03-RCP-101	Field	De-energize to close
B	03-XV-187	03-X-187	Filter Tank 3 Backwash Supply	03-ZSC-187	Filter Tank 3 Backwash Supply Valve Position Switch Closed	17805-PR-PID-006	2 of 2	New	DI	PLC	Valve - Switch - Position	-	24 VDC	-	-	No	Field	03-RCP-101	
B	-	03-X-187	Filter Tank 3 Backwash Supply	03-ZIC-187	Filter Tank 3 Backwash Supply Valve Position Indication Closed	17805-PR-PID-006	2 of 2	New	Soft	PLC	Valve - Indication - Position	-	-	-	-	-	03-RCP-101	-	
B	03-XV-187	03-X-187	Filter Tank 3 Backwash Supply	03-ZSO-187	Filter Tank 3 Backwash Supply Valve Position Switch Open	17805-PR-PID-006	2 of 2	New	DI	PLC	Valve - Switch - Position	-	24 VDC	-	-	No	Field	03-RCP-101	
B	-	03-X-187	Filter Tank 3 Backwash Supply	03-ZIO-187	Filter Tank 3 Backwash Supply Valve Position Indication Open	17805-PR-PID-006	2 of 2	New	Soft	PLC	Valve - Indication - Position	-	-	-	-	-	03-RCP-101	-	
B	03-XV-187	03-X-187	Filter Tank 3 Backwash Supply	03-XS-187	Filter Tank 3 Backwash Supply Valve Fault	17805-PR-PID-006	2 of 2	New	DI	PLC	Valve - Actuator - Fault	-	24 VDC	-	-	No	Field	03-RCP-101	
B	-	03-X-187	Filter Tank 3 Backwash Supply	03-XSA-187	Filter Tank 3 Backwash Supply Valve Fault Alarm	17805-PR-PID-006	2 of 2	New	Soft	PLC	Controller - Alarm - Discrete	-	-	-	-	-	03-RCP-101	-	
B	03-XV-187	03-X-187	Filter Tank 3 Backwash Supply	03-XHS-187	Filter Tank 3 Backwash Supply Valve Switch - Local/Remote Switch	17805-PR-PID-006	2 of 2	New	DI	PLC	Valve - Switch - Local/Remote	-	24 VDC	-	-	No	Field	03-RCP-101	
B	-	03-X-187	Filter Tank 3 Backwash Supply	03-XAR-187	Filter Tank 3 Backwash Supply Valve Remote Indication	17805-PR-PID-006	2 of 2	New	Soft	PLC	Valve - Indication - Remote	-	-	-	-	-	03-RCP-101	-	
B	-	03-X-240	Filter Tank 4	03-XV-240	Filter Tank 4 Inlet Valve	17805-PR-PID-007	1 of 2	New	-	-	Butterfly Valve	-	-	-	-	-	Field	-	
B	03-XV-240	03-X-240	Filter Tank 4	03-XY-240	Filter Tank 4 Inlet Valve Actuator	17805-PR-PID-007	1 of 2	New	-	-	Valve - Control - Actuator - Electric	120 VAC	-	-	0.43kW	No	Field	03-RCP-201	
B	03-RCP-201	03-X-240	Filter Tank 4	03-XHS-240A	Filter Tank 4 Inlet Valve HOA Switch - Auto	17805-PR-PID-007	1 of 2	New	DI	PLC	Switch - Panel Mounted HOA	-	24 VDC	-	-	No	03-RCP-201	03-RCP-201	
B	03-RCP-201	03-X-240	Filter Tank 4	03-XHS-240B	Filter Tank 4 Inlet Valve HOA Switch - Hand	17805-PR-PID-007	1 of 2	New	DI	PLC	Switch - Panel Mounted HOA	-	24 VDC	-	-	No	03-RCP-201	03-RCP-201	
B	-	03-X-240	Filter Tank 4	03-XHI-240	Filter Tank 4 Inlet Valve HOA Switch - Hand/Auto Indication	17805-PR-PID-007	1 of 2	New	Soft	PLC	Switch - Indication - Position	-	-	-	-	-	03-RCP-201	-	
B	03-XV-240	03-X-240	Filter Tank 4	03-XC-240	Filter Tank 4 Inlet Valve Command Open/Closed	17805-PR-PID-007	1 of 2	New	DO	PLC	Controller - Valve Position Output	-	24 VDC	-	-	No	03-RCP-201	Field	De-energize to close
B	03-XV-240	03-X-240	Filter Tank 4	03-XSC-240	Filter Tank 4 Inlet Valve Position Switch Closed	17805-PR-PID-007	1 of 2	New	DI	PLC	Valve - Switch - Position	-	24 VDC	-	-	No	Field	03-RCP-201	
B	-	03-X-240	Filter Tank 4	03-XIC-240	Filter Tank 4 Inlet Valve Position Indication Closed	17805-PR-PID-007	1 of 2	New	Soft	PLC	Valve - Indication - Position	-	-	-	-	-	03-RCP-201	-	
B	03-XV-240	03-X-240	Filter Tank 4	03-XSO-240	Filter Tank 4 Inlet Valve Position Switch Open	17805-PR-PID-007	1 of 2	New	DI	PLC	Valve - Switch - Position	-	24 VDC	-	-	No	Field	03-RCP-201	
B	-	03-X-240	Filter Tank 4	03-XIO-240	Filter Tank 4 Inlet Valve Position Indication Open	17805-PR-PID-007	1 of 2	New	Soft	PLC	Valve - Indication - Position	-	-	-	-	-	03-RCP-201	-	
B	-	03-X-240	Filter Tank 4	03-XAD-240	Filter Tank 4 Inlet Valve Position Discrepancy Alarm	17805-PR-PID-007	1 of 2	New	Soft	PLC	Valve - Alarm - Discrepancy	-	-	-	-	-	03-RCP-201	-	
B	03-XV-240	03-X-240	Filter Tank 4	03-XS-240	Filter Tank 4 Inlet Valve Fault Signal	17805-PR-PID-007	1 of 2	New	DI	PLC	Valve - Actuator Fault Output	-	24 VDC	-	-	No	Field	03-RCP-201	
B	-	03-X-240	Filter Tank 4	03-XA-240	Filter Tank 4 Inlet Valve Fault Alarm	17805-PR-PID-007	1 of 2	New	Soft	PLC	Valve - Alarm - Fault	-	-	-	-	-	03-RCP-201	-	
B	03-XV-240	03-X-240	Filter Tank 4	03-XHS-240C	Filter Tank 4 Inlet Valve Local/Remote Switch	17805-PR-PID-007	1 of 2	New	DI	PLC	Valve - Switch - Local/Remote	-	24 VDC	-	-	No	Field	03-RCP-201	
B	-	03-X-240	Filter Tank 4	03-XAR-240	Filter Tank 4 Inlet Valve Remote Indication	17805-PR-PID-007	1 of 2	New	Soft	PLC	Valve - Indication - Remote	-	-	-	-	-	03-RCP-201	-	
B	03-LIT-241	03-L-241	Filter Tank 4	03-LIT-241	Filter Tank 4 Level Transmitter	17805-PR-PID-007	1 of 2	New	AI	PLC	Level - Transmitter -Radar	-	24 VDC	4-20 mA	-	-	Field	03-RCP-201	
B	-	03-L-241	Filter Tank 4	03-LI-241	Filter Tank 4 Level Indication	17805-PR-PID-007	1 of 2	New	Soft	PLC	Level - Indication	-	-	-	-	-	03-RCP-201	-	
B	-	03-L-241	Filter Tank 4	03-LAHH-241	Filter Tank 4 Level Alarm High High	17805-PR-PID-007	1 of 2	New	Soft	PLC	Level - Alarm High High	-	-	-	-	-	03-RCP-201	-	
B	-	03-L-241	Filter Tank 4	03-LAH-241	Filter Tank 4 Level Alarm High	17805-PR-PID-007	1 of 2	New	Soft	PLC	Level - Alarm High	-	-	-	-	-	03-RCP-201	-	
B	-	03-L-241	Filter Tank 4	03-LAL-241	Filter Tank 4 Level Alarm Low	17805-PR-PID-007	1 of 2	New	Soft	PLC	Level - Alarm Low	-	-	-	-	-	03-RCP-201	-	
B	-	03-L-241	Filter Tank 4	03-LALL-241	Filter Tank 4 Level Alarm Low Low	17805-PR-PID-007	1 of 2	New	Soft	PLC	Level - Alarm Low Low	-	-	-	-	-	03-RCP-201	-	
B	-	03-X-242	Filter Tank 4	03-XV-242	Filter Tank 4 Air Scour Valve	17805-PR-PID-007	1 of 2	New	-	-	Butterfly Valve	-	-	-	-	-	Field	-	
B	03-XV-242	03-X-242	Filter Tank 4	03-XY-242	Filter Tank 4 Air Scour Valve Actuator	17805-PR-PID-007	1 of 2	New	-	-	Valve - Control - Actuator - Electric	120 VAC	-	-	0.43kW	Yes	Field	03-RCP-201	
B	03-RCP-201	03-X-242	Filter Tank 4	03-XHS-242A	Filter Tank 4 Air Scour Valve HOA Switch - Auto	17805-PR-PID-007	1 of 2	New	DI	PLC	Switch - Panel Mounted HOA	-	24 VDC	-	-	No	03-RCP-201	03-RCP-201	
B	03-RCP-201	03-X-242	Filter Tank 4	03-XHS-242B	Filter Tank 4 Air Scour Valve HOA Switch - Hand	17805-PR-PID-007	1 of 2	New	DI	PLC	Switch - Panel Mounted HOA	-	24 VDC	-	-	No	03-RCP-201	03-RCP-201	
B	-	03-X-242	Filter Tank 4	03-XHI-242	Filter Tank 4 Air Scour Valve HOA Switch - Hand/Auto Indication	17805-PR-PID-007	1 of 2	New	Soft	PLC	Switch - Indication - Position	-	-	-	-	-	03-RCP-201	-	
B	03-XV-242	03-X-242	Filter Tank 4	03-XC-242	Filter Tank 4 Air Scour Valve Command Open/Closed	17805-PR-PID-007	1 of 2	New	DO	PLC	Controller - Valve Position Output	-	24 VDC	-	-	No	03-RCP-201	Field	De-energize to close
B	03-XV-242	03-X-242	Filter Tank 4	03-XSC-242	Filter Tank 4 Air Scour Valve Position Switch Closed	17805-PR-PID-007	1 of 2	New	DI	PLC	Valve - Switch - Position	-	24 VDC	-	-	No	Field	03-RCP-201	
B	-	03-X-242	Filter Tank 4	03-XIC-242	Filter Tank 4 Air Scour Valve Position Indication Closed	17805-PR-PID-007	1 of 2	New	Soft	PLC	Valve - Indication - Position	-	-	-	-	-	03-RCP-201	-	
B	03-XV-242	03-X-242	Filter Tank 4	03-XSO-242	Filter Tank 4 Air Scour Valve Position Switch Open	17805-PR-PID-007	1 of 2	New	DI	PLC	Valve - Switch - Position	-	24 VDC	-	-	No	Field	03-RCP-201	
B	-	03-X-242	Filter Tank 4	03-XIO-242	Filter Tank 4 Air Scour Valve Position Indication Open	17805-PR-PID-007	1 of 2	New	Soft	PLC	Valve - Indication - Position	-	-	-	-	-	03-RCP-201	-	
B	-	03-X-242	Filter Tank 4	03-XAD-242	Filter Tank 4 Air Scour Valve Position Discrepancy Alarm	17805-PR-PID-007	1 of 2	New	Soft	PLC	Valve - Alarm - Discrepancy	-	-	-	-	-	03-RCP-201	-	
B	03-XV-242	03-X-242	Filter Tank 4	03-XS-242	Filter Tank 4 Air Scour Valve Fault Signal	17805-PR-PID-007	1 of 2	New	DI	PLC	Valve - Actuator Fault Output	-	24 VDC	-	-	No	Field	03-RCP-201	
B	-	03-X-242	Filter Tank 4	03-XA-242	Filter Tank 4 Air Scour Valve Fault Alarm	17805-PR-PID-007	1 of 2	New	Soft	PLC	Valve - Alarm - Fault	-	-	-	-	-	03-RCP-201	-	
B	03-XV-242	03-X-242	Filter Tank 4	03-XHS-242C	Filter Tank 4 Air Scour Valve Local/Remote Switch	17805-PR-PID-007	1 of 2	New	DI	PLC	Valve - Switch - Local/Remote	-	24 VDC	-	-	No	Field	03-RCP-201	
B	-	03-X-242	Filter Tank 4	03-XAR-242	Filter Tank 4 Air Scour Valve Remote Indication	17805-PR-PID-007	1 of 2	New	Soft	PLC	Valve - Indication - Remote	-	-	-	-	-	03-RCP-201	-	
B	03-PIT-243	03-P-243	Filter Tank 4	03-PT-243	Filter Tank 4 Pressure Transmitter	17805-PR-PID-007	1 of 2	New	AI	PLC	Pressure - Transmitter	-	24 VDC	4-20 mA	-	-	Field	03-RCP-201	
B	-	03-P-243	Filter Tank 4	03-PI-243	Filter Tank 4 Pressure Indication	17805-PR-PID-007	1 of 2	New	Soft	PLC	Pressure - Indication	-	-	-	-	-	03-RCP-201	-	
B	-	03-P-243	Filter Tank 4	03-PAHH-243	Filter Tank 4 Pressure Alarm High High	17805-PR-PID-007	1 of 2	New	Soft	PLC	Pressure - Alarm High High	-	-	-	-	-	03-RCP-201	-	
B	-	03-P-243	Filter Tank 4	03-PAH-243	Filter Tank 4 Pressure Alarm High	17805-PR-PID-007	1 of 2	New	Soft	PLC	Pressure - Alarm High	-	-	-	-	-	03-RCP-201	-	
B	-	03-P-244	Filter Tank 4	03-PI-244	Filter Tank 4 Pressure Gauge	17805-PR-PID-007	1 of 2	New	-	-	Pressure - Gauge	-	-	-	-	-	Field	-	
B	03-RCP-201	03-A-245	Filter Tank 4	03-AHS-245A	Filter Tank 4 Turbidity Sample Solenoid Valve Auto	17805-PR-PID-007	1 of 2	New	DI	PLC	Switch - Panel Mounted HOA	-	24 VDC	-	-	-	03-RCP-201	03-RCP-201	
B	03-RCP-201	03-A-245	Filter Tank 4	03-AHS-245B	Filter Tank 4 Turbidity Sample Solenoid Valve Hand	17805-PR-PID-007	1 of 2	New	DI	PLC	Switch - Panel Mounted HOA	-	24 VDC	-	-	-	03-RCP-201	03-RCP-201	
B	-	03-A-245	Filter Tank 4	03-AHI-245	Filter Tank 4 Turbidity Sample Solenoid Valve Hand/Auto Indication	17805-PR-PID-007	1 of 2	New	Soft	PLC	Switch - Indication - Position	-	-	-	-	-	03-RCP-201	-	
B	-	03-A-245	Filter Tank 4	03-AV-245	Filter Tank 4 Turbidity Sample Solenoid Valve	17805-PR-PID-007	1 of 2	New	-	-	Valve - 2-Way Solenoid	120 VAC	-	-	0.58A	-	Field	-	
B	03-AV-245	03-A-245	Filter Tank 4	03-AC-245	Filter Tank 4 Turbidity Sample Solenoid Valve Position Command	17805-PR-PID-007	1 of 2	New	DO	PLC	Controller - Valve Position Output	-	24 VDC	-	-	-	03-RCP-201	Field	
B	03-AIC-250	03-A-245	Filter Tank 4	03-AE-245	Filter Tank 4 Turbidity Analyzer	17805-PR-PID-007	1 of 2	New	-	PLC	Turbidity - Analyzer	-	-	-	-	-	Field	03-AIC-250	
B	03-AIC-250	03-A-245	Filter Tank 4	03-AIT-245	Filter Tank 4 Turbidity Transmitter - Signal	17805-PR-PID-007	1 of 2	New	AI	PLC	Turbidity - Transmitter	-	24 VDC	4-20 mA	-	-	Field	03-RCP-201	03-AIT-245 Signal from common Turbidity Controller 03-AIC-250
B	-	03-A-245	Filter Tank 4	03-AI-245	Filter Tank 4 Turbidity Indication	17805-PR-PID-007	1 of 2	New	Soft	PLC	Turbidity - Indication	-	-	-	-	-	03-RCP-201	-	
B	-	03-A-245	Filter Tank 4	03-AAH-245	Filter Tank 4 Turbidity Alarm High	17805-PR-PID-007	1 of 2	New	Soft	PLC	Turbidity - Alarm High	-	-	-	-	-	03-RCP-201	-	
B	03-AIC-250	03-A-250	Filter Tank 4/5/6	03-AIC-250	Filter Tank 4/5/6 Common Turbidity Field Controller	17805-PR-PID-007	1 of 2	New	-	PLC	Turbidity - Field Controller	120 VAC	-	-	0.6kW	No	Field	03-RCP-101	Common Turbidity Controller for 03-AE/AIT-1245/265/285
B	-	03-X-260	Filter Tank 5	03-XV-260	Filter Tank 5 Inlet Valve	17805-PR-PID-007	1 of 2	New	-	-	Butterfly Valve	-	-	-	-	-	Field	-	
B	03-XV-260	03-X-260	Filter Tank 5	03-XY-260	Filter Tank 5 Inlet Valve Actuator	17805-PR-PID-007	1 of 2	New	-	-	Valve - Control - Actuator - Electric	120 VAC	-	-	0.43kW	Yes	Field	03-RCP-201	
B	03-RCP-201	03-X-260	Filter Tank 5	03-XHS-260A	Filter Tank 5 Inlet Valve HOA Switch - Auto	17805-PR-PID-007	1 of 2	New	DI	PLC	Switch - Panel Mounted HOA	-	24 VDC	-	-	No	03-RCP-201	03-RCP-201	
B	03-RCP-201	03-X-260	Filter Tank 5	03-XHS-260B	Filter Tank 5 Inlet Valve HOA Switch - Hand	17805-PR-PID-007	1 of 2	New	DI	PLC	Switch - Panel Mounted HOA	-	24 VDC	-	-	No	03-RCP-201	03-RCP-201	
B	-	03-X-260	Filter Tank 5	03-XHI-260	Filter Tank 5 Inlet Valve HOA Switch - Hand/Auto Indication	17805-PR-PID-007	1 of 2	New	Soft	PLC	Switch - Indication - Position	-	-	-	-	-	03-RCP-201	-	
B	03-XV-260	03-X-260	Filter Tank 5	03-XC-260	Filter Tank 5 Inlet Valve Command Open/Closed	17805-PR-PID-007	1 of 2	New	DO	PLC	Controller - Valve Position Output	-	24 VDC	-	-	No	03-RCP-201	Field	De-energize to close
B	03-XV-260	03-X-260	Filter Tank 5	03-XSC-260	Filter Tank 5 Inlet Valve Position Switch Closed	17805-PR-PID-007	1 of 2	New	DI	PLC	Valve - Switch - Position	-	24 VDC	-	-	No	Field	03-RCP-201	
B	-	03-X-260	Filter Tank 5	03-XIC-260	Filter Tank 5 Inlet Valve Position Indication Closed	17805-PR-PID-007	1 of 2	New	Soft	PLC	Valve - Indication - Position	-	-	-	-	-	03-RCP-201	-	
B	03-XV-260	03-X-260	Filter Tank 5	03-XSO-260	Filter Tank 5 Inlet Valve Position Switch Open	17805-PR-PID-007	1 of 2	New	DI	PLC	Valve - Switch - Position	-	24 VDC	-	-	No	Field	03-RCP-201	
B	-	03-X-260	Filter Tank 5	03-XIO-260	Filter Tank 5 Inlet Valve Position Indication Open	17805-PR-PID-007	1 of 2	New	Soft	PLC	Valve - Indication - Position	-	-	-	-	-	03-RCP-201	-	
B	-	03-X-260	Filter Tank 5	03-XAD-260	Filter Tank 5 Inlet Valve Position Discrepancy Alarm	17805-PR-PID-007	1 of 2	New	Soft	PLC	Valve - Alarm - Discrepancy	-	-	-	-	-	03-RCP-201	-	
B	03-XV-260	03-X-260	Filter Tank 5	03-XS-260	Filter Tank 5 Inlet Valve Fault Signal	17805-PR-PID-007	1 of 2	New	DI	PLC	Valve - Actuator Fault Output	-	24 VDC	-	-	No	Field	03-RCP-201	
B	-	03-X-260	Filter Tank 5	03-XA-260	Filter Tank 5 Inlet Valve Fault Alarm	17805-PR-PID-007	1 of 2	New	Soft	PLC	Valve - Alarm - Fault	-	-	-	-	-	03-RCP-201	-	
B	03-XV-260	03-X-260	Filter Tank 5	03-XHS-260C	Filter Tank 5 Inlet Valve Local/Remote Switch	17805-PR-PID-007	1 of 2	New	DI	PLC	Valve - Switch - Local/Remote	-	24 VDC	-	-	No	Field	03-RCP-201	
B	-	03-X-260	Filter Tank 5	03-XAR-260	Filter Tank 5 Inlet Valve Remote Indication	17805-PR-PID-007	1 of 2	New	Soft	PLC	Valve - Indication - Remote	-	-	-	-	-	03-RCP-201	-	
B	03-LIT-261	03-L-261	Filter Tank 5	03-LIT-261	Filter Tank 5 Level Transmitter	17805-PR-PID-007	1 of 2	New	AI	PLC	Level - Transmitter -Radar	-	24 VDC	4-20 mA	-	-	Field	03-RCP-201	
B	-	03-L-261	Filter Tank 5	03-LI-261	Filter Tank 5 Level Indication	17805-PR-PID-007	1 of 2	New	Soft	PLC	Level - Indication	-	-	-	-	-	03-RCP-201	-	
B	-	03-L-261	Filter Tank 5	03-LAHH-261	Filter Tank 5 Level Alarm High High	17805-PR-PID-007	1 of 2	New	Soft	PLC	Level - Alarm High High	-	-	-	-	-	03-RCP-201	-	
B	-	03-L-261	Filter Tank 5	03-LAH-261	Filter Tank 5 Level Alarm High	17805-PR-PID-007	1 of 2	New	Soft	PLC	Level - Alarm High	-	-	-	-	-	03-RCP-201	-	
B	-	03-L-261	Filter Tank 5	03-LAL-261	Filter Tank 5 Level Alarm Low	17805-PR-PID-007	1 of 2	New	Soft	PLC	Level - Alarm Low	-	-	-	-	-	03-RCP-201	-	
B	-	03-X-262	Filter Tank 5	03-XV-262	Filter Tank 5 Air Scour Valve	17805-PR-PID-007	1 of 2	New	-	-	Butterfly Valve	-	-	-	-	-	Field	-	
B	03-XV-262	03-X-262	Filter Tank 5	03-XY-262	Filter Tank 5 Air Scour Valve Actuator	17805-PR-PID-007	1 of 2	New	-	-	Valve - Control - Actuator - Electric	120 VAC	-	-	0.43kW	Yes	Field	03-RCP-201	
B	03-RCP-201	03-X-262	Filter Tank 5	03-XHS-262A	Filter Tank 5 Air Scour Valve HOA Switch - Auto	17805-PR-PID-007	1 of 2	New	DI	PLC	Switch - Panel Mounted HOA	-	24 VDC	-	-	No	03-RCP-201	03-RCP-201	
B	03-RCP-201	03-X-262	Filter Tank 5	03-XHS-262B	Filter Tank 5 Air Scour Valve HOA Switch - Hand	17805-PR-PID-007	1 of 2	New	DI	PLC	Switch - Panel Mounted HOA	-	24 VDC	-	-	No	03-RCP-201	03-RCP-201	
B	-	03-X-262	Filter Tank 5	03-XHI-262	Filter Tank 5 Air Scour Valve HOA Switch - Hand/Auto Indication	17805-PR-PID-007	1 of 2	New	Soft	PLC	Switch - Indication - Position	-	-	-	-	-	03-RCP-201	-	
B	03-XV-262	03-X-262	Filter Tank 5	03-XC-262	Filter Tank 5 Air Scour Valve Command Open/Closed	17805-PR-PID-007	1 of 2	New	DO	PLC	Controller - Valve Position Output	-	24 VDC	-	-	No	03-RCP-201	Field	De-energize to close
B	03-XV-262	03-X-262	Filter Tank 5	03-XSC-262	Filter Tank 5 Air Scour Valve Position Switch Closed	17805-PR-PID-007	1 of 2	New	DI	PLC	Valve - Switch - Position	-	24 VDC	-	-	No	Field	03-RCP-201	
B	-	03-X-262	Filter Tank 5	03-XIC-262	Filter Tank 5 Air Scour Valve Position Indication Closed	17805-PR-PID-007	1 of 2	New	Soft	PLC	Valve - Indication - Position	-	-	-	-	-	03-RCP-201	-	
B	03-XV-262	03-X-262	Filter Tank 5	03-XSO-262	Filter Tank 5 Air Scour Valve Position Switch Open	17805-PR-PID-007	1 of 2	New	DI	PLC	Valve - Switch - Position	-	24 VDC	-	-	No	Field	03-RCP-201	
B	-	03-X-262	Filter Tank 5	03-XIO-262	Filter Tank 5 Air Scour Valve Position Indication Open	17805-PR-PID-007	1 of 2	New	Soft	PLC	Valve - Indication - Position	-	-	-	-	-	03-RCP-201	-	
B	-	03-X-262	Filter Tank 5	03-XAD-262	Filter Tank 5 Air Scour Valve Position Discrepancy Alarm	17805-PR-PID-007	1 of 2	New	Soft	PLC	Valve - Alarm - Discrepancy	-	-	-	-	-	03-RCP-201	-	

INSTRUMENT INDEX

Rev	Equipment No	Loop Number	Loop Service	Tag Number	Tag Description	P&ID	Sheet	Status	IO Type Name	System	Instrument Type	Power Voltage	Control Voltage	Signal	Power / Current	UPS Powered	Location	Wired To/From	Notes
B	03-XV-262	03-X-262	Filter Tank 5	03-XS-262	Filter Tank 5 Air Scour Valve Fault Signal	17805-PR-PID-007	1 of 2	New	DI	PLC	Valve - Actuator Fault Output	-	24 VDC	-	-	No	Field	03-RCP-201	
B	-	03-X-262	Filter Tank 5	03-XA-262	Filter Tank 5 Air Scour Valve Fault Alarm	17805-PR-PID-007	1 of 2	New	Soft	PLC	Valve - Alarm - Fault	-	-	-	-	-	03-RCP-201	-	
B	03-XV-262	03-X-262	Filter Tank 5	03-XHS-262C	Filter Tank 5 Air Scour Valve Local/Remote Switch	17805-PR-PID-007	1 of 2	New	DI	PLC	Valve - Switch - Local/Remote	-	24 VDC	-	-	No	Field	03-RCP-201	
B	-	03-X-262	Filter Tank 5	03-XAR-262	Filter Tank 5 Air Scour Valve Remote Indication	17805-PR-PID-007	1 of 2	New	Soft	PLC	Valve - Indication - Remote	-	-	-	-	-	03-RCP-201	-	
B	03-PIT-263	03-P-263	Filter Tank 5	03-PT-263	Filter Tank 5 Pressure Transmitter	17805-PR-PID-007	1 of 2	New	AI	PLC	Pressure - Transmitter	-	24 VDC	4-20 mA	-	-	Field	03-RCP-201	
B	-	03-P-263	Filter Tank 5	03-PI-263	Filter Tank 5 Pressure Indication	17805-PR-PID-007	1 of 2	New	Soft	PLC	Pressure - Indication	-	-	-	-	-	03-RCP-201	-	
B	-	03-P-263	Filter Tank 5	03-PAHH-263	Filter Tank 5 Pressure Alarm High High	17805-PR-PID-007	1 of 2	New	Soft	PLC	Pressure - Alarm High High	-	-	-	-	-	03-RCP-201	-	
B	-	03-P-263	Filter Tank 5	03-PAH-263	Filter Tank 5 Pressure Alarm High	17805-PR-PID-007	1 of 2	New	Soft	PLC	Pressure - Alarm High	-	-	-	-	-	03-RCP-201	-	
B	-	03-P-264	Filter Tank 5	03-PI-264	Filter Tank 5 Pressure Gauge	17805-PR-PID-007	1 of 2	New	-	-	Pressure - Gauge	-	-	-	-	-	Field	-	
B	03-RCP-201	03-A-265	Filter Tank 5	03-AHS-265A	Filter Tank 5 Turbidity Sample Solenoid Valve Auto	17805-PR-PID-007	1 of 2	New	DI	PLC	Switch - Panel Mounted HOA	-	24 VDC	-	-	-	03-RCP-201	03-RCP-201	
B	03-RCP-201	03-A-265	Filter Tank 5	03-AHS-265B	Filter Tank 5 Turbidity Sample Solenoid Valve Hand	17805-PR-PID-007	1 of 2	New	DI	PLC	Switch - Panel Mounted HOA	-	24 VDC	-	-	-	03-RCP-201	03-RCP-201	
B	-	03-A-265	Filter Tank 5	03-AHI-265	Filter Tank 5 Turbidity Sample Solenoid Valve Hand/Auto Indication	17805-PR-PID-007	1 of 2	New	Soft	PLC	Switch - Indication - Position	-	-	-	-	-	03-RCP-201	-	
B	-	03-A-265	Filter Tank 5	03-AV-265	Filter Tank 5 Turbidity Sample Solenoid Valve	17805-PR-PID-007	1 of 2	New	-	-	Valve - 2-Way Solenoid	120 VAC	-	-	0.58A	-	Field	-	
B	03-AV-265	03-A-265	Filter Tank 5	03-AC-265	Filter Tank 5 Turbidity Sample Solenoid Valve Position Command	17805-PR-PID-007	1 of 2	New	DO	PLC	Controller - Valve Position Output	-	24 VDC	-	-	-	03-RCP-201	Field	
B	03-AIC-250	03-A-265	Filter Tank 5	03-AE-265	Filter Tank 5 Turbidity Analyzer	17805-PR-PID-007	1 of 2	New	-	PLC	Turbidity - Analyzer	-	-	-	-	-	Field	03-AIC-250	
B	03-AIC-250	03-A-265	Filter Tank 5	03-AIT-265	Filter Tank 5 Turbidity Transmitter - Signal	17805-PR-PID-007	1 of 2	New	AI	PLC	Turbidity - Transmitter	-	24 VDC	4-20 mA	-	-	Field	03-RCP-201	03-AIT-265 Signal from common Turbidity Controller 03-AIC-250
B	-	03-A-265	Filter Tank 5	03-AI-265	Filter Tank 5 Turbidity Indication	17805-PR-PID-007	1 of 2	New	Soft	PLC	Turbidity - Indication	-	-	-	-	-	03-RCP-201	-	
B	-	03-A-265	Filter Tank 5	03-AAH-265	Filter Tank 5 Turbidity Alarm High	17805-PR-PID-007	1 of 2	New	Soft	PLC	Turbidity - Alarm High	-	-	-	-	-	03-RCP-201	-	
B	-	03-A-280	Filter Tank 6	03-XHI-280	Filter Tank 6 Inlet Valve HOA Switch - Hand/Auto Indication	17805-PR-PID-007	1 of 2	New	Soft	PLC	Switch - Indication - Position	-	-	-	-	-	03-RCP-201	-	
B	03-XV-280	03-X-280	Filter Tank 6	03-XC-280	Filter Tank 6 Inlet Valve Command Open/Closed	17805-PR-PID-007	1 of 2	New	DO	PLC	Controller - Valve Position Output	-	24 VDC	-	-	No	03-RCP-201	Field	De-energize to close
B	03-XV-280	03-X-280	Filter Tank 6	03-XSC-280	Filter Tank 6 Inlet Valve Position Switch Closed	17805-PR-PID-007	1 of 2	New	DI	PLC	Valve - Switch - Position	-	24 VDC	-	-	No	Field	03-RCP-201	
B	-	03-X-280	Filter Tank 6	03-XIC-280	Filter Tank 6 Inlet Valve Position Indication Closed	17805-PR-PID-007	1 of 2	New	Soft	PLC	Valve - Indication - Position	-	-	-	-	-	03-RCP-201	-	
B	03-XV-280	03-X-280	Filter Tank 6	03-XSO-280	Filter Tank 6 Inlet Valve Position Switch Open	17805-PR-PID-007	1 of 2	New	DI	PLC	Valve - Switch - Position	-	24 VDC	-	-	No	Field	03-RCP-201	
B	-	03-X-280	Filter Tank 6	03-XIO-280	Filter Tank 6 Inlet Valve Position Indication Open	17805-PR-PID-007	1 of 2	New	Soft	PLC	Valve - Indication - Position	-	-	-	-	-	03-RCP-201	-	
B	-	03-X-280	Filter Tank 6	03-XAD-280	Filter Tank 6 Inlet Valve Position Discrepancy Alarm	17805-PR-PID-007	1 of 2	New	Soft	PLC	Valve - Alarm - Discrepancy	-	-	-	-	-	03-RCP-201	-	
B	03-XV-280	03-X-280	Filter Tank 6	03-XS-280	Filter Tank 6 Inlet Valve Fault Signal	17805-PR-PID-007	1 of 2	New	DI	PLC	Valve - Actuator Fault Output	-	24 VDC	-	-	No	Field	03-RCP-201	
B	-	03-X-280	Filter Tank 6	03-XA-280	Filter Tank 6 Inlet Valve Fault Alarm	17805-PR-PID-007	1 of 2	New	Soft	PLC	Valve - Alarm - Fault	-	-	-	-	-	03-RCP-201	-	
B	03-XV-280	03-X-280	Filter Tank 6	03-XHS-280C	Filter Tank 6 Inlet Valve Local/Remote Switch	17805-PR-PID-007	1 of 2	New	DI	PLC	Valve - Switch - Local/Remote	-	24 VDC	-	-	No	Field	03-RCP-201	
B	-	03-X-280	Filter Tank 6	03-XAR-280	Filter Tank 6 Inlet Valve Remote Indication	17805-PR-PID-007	1 of 2	New	Soft	PLC	Valve - Indication - Remote	-	-	-	-	-	03-RCP-201	-	
B	03-LIT-281	03-L-281	Filter Tank 6	03-LIT-281	Filter Tank 6 Level Transmitter	17805-PR-PID-007	1 of 2	New	AI	PLC	Level - Transmitter -Radar	-	24 VDC	4-20 mA	-	-	Field	03-RCP-201	
B	-	03-L-281	Filter Tank 6	03-LI-281	Filter Tank 6 Level Indication	17805-PR-PID-007	1 of 2	New	Soft	PLC	Level - Indication	-	-	-	-	-	03-RCP-201	-	
B	-	03-L-281	Filter Tank 6	03-LAHH-281	Filter Tank 6 Level Alarm High High	17805-PR-PID-007	1 of 2	New	Soft	PLC	Level - Alarm High High	-	-	-	-	-	03-RCP-201	-	
B	-	03-L-281	Filter Tank 6	03-LAH-281	Filter Tank 6 Level Alarm High	17805-PR-PID-007	1 of 2	New	Soft	PLC	Level - Alarm High	-	-	-	-	-	03-RCP-201	-	
B	-	03-L-281	Filter Tank 6	03-LAL-281	Filter Tank 6 Level Alarm Low	17805-PR-PID-007	1 of 2	New	Soft	PLC	Level - Alarm Low	-	-	-	-	-	03-RCP-201	-	
B	-	03-X-282	Filter Tank 6	03-XV-282	Filter Tank 6 Air Scour Valve	17805-PR-PID-007	1 of 2	New	-	-	Butterfly Valve	-	-	-	-	-	Field	-	
B	03-XV-282	03-X-282	Filter Tank 6	03-XY-282	Filter Tank 6 Air Scour Valve Actuator	17805-PR-PID-007	1 of 2	New	-	-	Valve - Control - Actuator - Electric	120 VAC	-	-	0.43kW	Yes	Field	03-RCP-201	
B	03-RCP-201	03-X-282	Filter Tank 6	03-XHS-282A	Filter Tank 6 Air Scour Valve HOA Switch - Auto	17805-PR-PID-007	1 of 2	New	DI	PLC	Switch - Panel Mounted HOA	-	24 VDC	-	-	No	03-RCP-201	03-RCP-201	
B	03-RCP-201	03-X-282	Filter Tank 6	03-XHS-282B	Filter Tank 6 Air Scour Valve HOA Switch - Hand	17805-PR-PID-007	1 of 2	New	DI	PLC	Switch - Panel Mounted HOA	-	24 VDC	-	-	No	03-RCP-201	03-RCP-201	
B	-	03-X-282	Filter Tank 6	03-XHI-282	Filter Tank 6 Air Scour Valve HOA Switch - Hand/Auto Indication	17805-PR-PID-007	1 of 2	New	Soft	PLC	Switch - Indication - Position	-	-	-	-	-	03-RCP-201	-	
B	03-XV-282	03-X-282	Filter Tank 6	03-XC-282	Filter Tank 6 Air Scour Valve Command Open/Closed	17805-PR-PID-007	1 of 2	New	DO	PLC	Controller - Valve Position Output	-	24 VDC	-	-	No	03-RCP-201	Field	De-energize to close
B	03-XV-282	03-X-282	Filter Tank 6	03-XSC-282	Filter Tank 6 Air Scour Valve Position Switch Closed	17805-PR-PID-007	1 of 2	New	DI	PLC	Valve - Switch - Position	-	24 VDC	-	-	No	Field	03-RCP-201	
B	-	03-X-282	Filter Tank 6	03-XIC-282	Filter Tank 6 Air Scour Valve Position Indication Closed	17805-PR-PID-007	1 of 2	New	Soft	PLC	Valve - Indication - Position	-	-	-	-	-	03-RCP-201	-	
B	03-XV-282	03-X-282	Filter Tank 6	03-XSO-282	Filter Tank 6 Air Scour Valve Position Switch Open	17805-PR-PID-007	1 of 2	New	DI	PLC	Valve - Switch - Position	-	24 VDC	-	-	No	Field	03-RCP-201	
B	-	03-X-282	Filter Tank 6	03-XIO-282	Filter Tank 6 Air Scour Valve Position Indication Open	17805-PR-PID-007	1 of 2	New	Soft	PLC	Valve - Indication - Position	-	-	-	-	-	03-RCP-201	-	
B	-	03-X-282	Filter Tank 6	03-XAD-282	Filter Tank 6 Air Scour Valve Position Discrepancy Alarm	17805-PR-PID-007	1 of 2	New	Soft	PLC	Valve - Alarm - Discrepancy	-	-	-	-	-	03-RCP-201	-	
B	03-XV-282	03-X-282	Filter Tank 6	03-XS-282	Filter Tank 6 Air Scour Valve Fault Signal	17805-PR-PID-007	1 of 2	New	DI	PLC	Valve - Actuator Fault Output	-	24 VDC	-	-	No	Field	03-RCP-201	
B	-	03-X-282	Filter Tank 6	03-XA-282	Filter Tank 6 Air Scour Valve Fault Alarm	17805-PR-PID-007	1 of 2	New	Soft	PLC	Valve - Alarm - Fault	-	-	-	-	-	03-RCP-201	-	
B	03-XV-282	03-X-282	Filter Tank 6	03-XHS-282C	Filter Tank 6 Air Scour Valve Local/Remote Switch	17805-PR-PID-007	1 of 2	New	DI	PLC	Valve - Switch - Local/Remote	-	24 VDC	-	-	No	Field	03-RCP-201	
B	-	03-X-282	Filter Tank 6	03-XAR-282	Filter Tank 6 Air Scour Valve Remote Indication	17805-PR-PID-007	1 of 2	New	Soft	PLC	Valve - Indication - Remote	-	-	-	-	-	03-RCP-201	-	
B	03-PIT-283	03-P-283	Filter Tank 6	03-PT-283	Filter Tank 6 Pressure Transmitter	17805-PR-PID-007	1 of 2	New	AI	PLC	Pressure - Transmitter	-	24 VDC	4-20 mA	-	-	Field	03-RCP-201	
B	-	03-P-283	Filter Tank 6	03-PI-283	Filter Tank 6 Pressure Indication	17805-PR-PID-007	1 of 2	New	Soft	PLC	Pressure - Indication	-	-	-	-	-	03-RCP-201	-	
B	-	03-P-283	Filter Tank 6	03-PAHH-283	Filter Tank 6 Pressure Alarm High High	17805-PR-PID-007	1 of 2	New	Soft	PLC	Pressure - Alarm High High	-	-	-	-	-	03-RCP-201	-	
B	-	03-P-283	Filter Tank 6	03-PAH-283	Filter Tank 6 Pressure Alarm High	17805-PR-PID-007	1 of 2	New	Soft	PLC	Pressure - Alarm High	-	-	-	-	-	03-RCP-201	-	
B	-	03-P-284	Filter Tank 6	03-PI-284	Filter Tank 6 Pressure Gauge	17805-PR-PID-007	1 of 2	New	-	-	Pressure - Gauge	-	-	-	-	-	Field	-	
B	03-RCP-201	03-A-285	Filter Tank 6	03-AHS-285A	Filter Tank 6 Turbidity Sample Solenoid Valve Auto	17805-PR-PID-007	1 of 2	New	DI	PLC	Switch - Panel Mounted HOA	-	24 VDC	-	-	-	03-RCP-201	03-RCP-201	
B	03-RCP-201	03-A-285	Filter Tank 6	03-AHS-285B	Filter Tank 6 Turbidity Sample Solenoid Valve Hand	17805-PR-PID-007	1 of 2	New	DI	PLC	Switch - Panel Mounted HOA	-	24 VDC	-	-	-	03-RCP-201	03-RCP-201	
B	-	03-A-285	Filter Tank 6	03-AHI-285	Filter Tank 6 Turbidity Sample Solenoid Valve Hand/Auto Indication	17805-PR-PID-007	1 of 2	New	Soft	PLC	Switch - Indication - Position	-	-	-	-	-	03-RCP-201	-	
B	-	03-A-285	Filter Tank 6	03-AV-285	Filter Tank 6 Turbidity Sample Solenoid Valve	17805-PR-PID-007	1 of 2	New	-	-	Valve - 2-Way Solenoid	120 VAC	-	-	0.58A	-	Field	-	
B	03-AV-285	03-A-285	Filter Tank 6	03-AC-285	Filter Tank 6 Turbidity Sample Solenoid Valve Position Command	17805-PR-PID-007	1 of 2	New	DO	PLC	Controller - Valve Position Output	-	24 VDC	-	-	-	03-RCP-201	Field	
B	03-AIC-250	03-A-285	Filter Tank 6	03-AE-285	Filter Tank 6 Turbidity Analyzer	17805-PR-PID-007	1 of 2	New	-	PLC	Turbidity - Analyzer	-	-	-	-	-	Field	03-AIC-250	
B	03-AIC-250	03-A-285	Filter Tank 6	03-AIT-285	Filter Tank 6 Turbidity Transmitter - Signal	17805-PR-PID-007	1 of 2	New	AI	PLC	Turbidity - Transmitter	-	24 VDC	4-20 mA	-	-	Field	03-RCP-201	03-AIT-285 Signal from common Turbidity Controller 03-AIC-250
B	-	03-A-285	Filter Tank 6	03-AI-285	Filter Tank 6 Turbidity Indication	17805-PR-PID-007	1 of 2	New	Soft	PLC	Turbidity - Indication	-	-	-	-	-	03-RCP-201	-	
B	-	03-A-285	Filter Tank 6	03-AAH-285	Filter Tank 6 Turbidity Alarm High	17805-PR-PID-007	1 of 2	New	Soft	PLC	Turbidity - Alarm High	-	-	-	-	-	03-RCP-201	-	
B	-	03-L-246A	Filter Tank 4 Effluent to Clearwell	03-LV-246A	Filter Tank 4 Effluent to Clearwell Valve	17805-PR-PID-007	2 of 2	New	-	-	Valve - Control - Butterfly	-	-	-	-	-	Field	-	
B	03-LV-246A	03-L-246A	Filter Tank 4 Effluent to Clearwell	03-LY-246A	Filter Tank 4 Effluent to Clearwell Valve Actuator	17805-PR-PID-007	2 of 2	New	-	-	Valve - Control - Actuator - Electric	120 VAC	-	-	0.43kW	Yes	Field	03-RCP-201	
B	03-LV-246A	03-L-246A	Filter Tank 4 Effluent to Clearwell	03-LC-246A	Filter Tank 4 Effluent to Clearwell Valve Position Output	17805-PR-PID-007	2 of 2	New	AO	PLC	Controller - Position Output	-	-	4-20 mA	-	-	03-RCP-201	Field	
B	03-LV-246A	03-L-246A	Filter Tank 4 Effluent to Clearwell	03-LS-246A	Filter Tank 4 Effluent to Clearwell Valve Fault	17805-PR-PID-007	2 of 2	New	DI	PLC	Valve - Actuator - Fault	-	24 VDC	-	-	No	Field	03-RCP-201	
B	-	03-L-246A	Filter Tank 4 Effluent to Clearwell	03-LSA-246A	Filter Tank 4 Effluent to Clearwell Valve Fault Alarm	17805-PR-PID-007	2 of 2	New	Soft	PLC	Controller - Alarm - Discrete	-	-	-	-	-	03-RCP-201	-	
B	03-LV-246A	03-L-246A	Filter Tank 4 Effluent to Clearwell	03-ZT-246A	Filter Tank 4 Effluent to Clearwell Valve Position Feedback Signal	17805-PR-PID-007	2 of 2	New	AI	PLC	Valve - Position Feedback	-	-	4-20 mA	-	-	Field	03-RCP-201	
B	-	03-L-246A	Filter Tank 4 Effluent to Clearwell	03-ZI-246A	Filter Tank 4 Effluent to Clearwell Valve Position Feedback Indication	17805-PR-PID-007	2 of 2	New	Soft	PLC	Valve - Position Indication	-	-	-	-	-	03-RCP-201	-	
B	03-LV-246A	03-L-246A	Filter Tank 4 Effluent to Clearwell	03-LHS-246A	Filter Tank 4 Effluent to Clearwell Valve Local/Remote Switch	17805-PR-PID-007	2 of 2	New	DI	PLC	Valve - Switch - Local/Remote	-	24 VDC	-	-	No	Field	03-RCP-201	
B	-	03-L-246A	Filter Tank 4 Effluent to Clearwell	03-LAR-246A	Filter Tank 4 Effluent to Clearwell Valve Remote Indication	17805-PR-PID-007	2 of 2	New	Soft	PLC	Valve - Indication - Remote	-	-	-	-	-	03-RCP-201	-	
B	-	03-L-246B	Filter Tank 4 Rinse to Waste	03-LV-246B	Filter Tank 4 Rinse to Waste Valve	17805-PR-PID-007	2 of 2	New	-	-	Valve - Control - Butterfly	-	-	-	-	-	Field	-	
B	03-LV-246B	03-L-246B	Filter Tank 4 Rinse to Waste	03-LY-246B	Filter Tank 4 Rinse to Waste Valve Actuator	17805-PR-PID-007	2 of 2	New	-	-	Valve - Control - Actuator - Electric	120 VAC	-	-	0.43kW	Yes	Field	03-RCP-201	
B	03-LV-246B	03-L-246B	Filter Tank 4 Rinse to Waste	03-LC-246B	Filter Tank 4 Rinse to Waste Valve Position Output	17805-PR-PID-007	2 of 2	New	AO	PLC	Controller - Position Output	-	-	4-20 mA	-	-	03-RCP-201	Field	
B	03-LV-246B	03-L-246B	Filter Tank 4 Rinse to Waste	03-LS-246B	Filter Tank 4 Rinse to Waste Valve Fault	17805-PR-PID-007	2 of 2	New	DI	PLC	Valve - Actuator - Fault	-	24 VDC	-	-	No	Field	03-RCP-201	
B	-	03-L-246B	Filter Tank 4 Rinse to Waste	03-LSA-246B	Filter Tank 4 Rinse to Waste Valve Fault Alarm	17805-PR-PID-007	2 of 2	New	Soft	PLC	Controller - Alarm - Discrete	-	-	-	-	-	03-RCP-201	-	
B	03-LV-246B	03-L-246B	Filter Tank 4 Rinse to Waste	03-ZT-246B	Filter Tank 4 Rinse to Waste Valve Position Feedback Signal	17805-PR-PID-007	2 of 2	New	AI	PLC	Valve - Position Feedback	-	-	4-20 mA	-	-	Field	03-RCP-201	
B	-	03-L-246B	Filter Tank 4 Rinse to Waste	03-ZI-246B	Filter Tank 4 Rinse to Waste Valve Position Feedback Indication	17805-PR-PID-007	2 of 2	New	Soft	PLC	Valve - Position Indication	-	-	-	-	-	03-RCP-201	-	
B	03-LV-246B	03-L-246B	Filter Tank 4 Rinse to Waste	03-LHS-246B	Filter Tank 4 Rinse to Waste Valve Local/Remote Switch	17805-PR-PID-007	2 of 2	New	DI	PLC	Valve - Switch - Local/Remote	-	24 VDC	-	-	No	Field	03-RCP-201	
B	-	03-L-246B	Filter Tank 4 Rinse to Waste	03-LAR-246B	Filter Tank 4 Rinse to Waste Valve Remote Indication	17805-PR-PID-007	2 of 2	New	Soft	PLC	Valve - Indication - Remote	-	-	-	-	-	03-RCP-201	-	
B	-	03-X-247	Filter Tank 4 Backwash Supply	03-XV-247	Filter Tank 4 Backwash Supply Valve	17805-PR-PID-007	2 of 2	New	-	-	Valve - Control - Butterfly	-	-	-	-	-	Field	-	
B	03-XV-247	03-X-247	Filter Tank 4 Backwash Supply	03-XY-247	Filter Tank 4 Backwash Supply Valve Actuator	17805-PR-PID-007	2 of 2	New	-	-	Valve - Control - Actuator - Electric	120 VAC	-	-	0.43kW	Yes	Field	03-RCP-201	
B	03-XV-247	03-X-247	Filter Tank 4 Backwash Supply	03-XC-247	Filter Tank 4 Backwash Supply Valve Position Output	17805-PR-PID-007	2 of 2	New	DO	PLC	Controller - Position Output	-	24 VDC	-	-	-	03-RCP-201	Field	De-energize to close
B	03-XV-247	03-X-247	Filter Tank 4 Backwash Supply	03-ZSC-247	Filter Tank 4 Backwash Supply Valve Position Switch Closed	17805-PR-PID-007	2 of 2	New	DI	PLC	Valve - Switch - Position	-	24 VDC	-	-	No	Field	03-RCP-201	
B	-	03-X-247	Filter Tank 4 Backwash Supply	03-ZIC-247	Filter Tank 4 Backwash Supply Valve Position Indication Closed	17805-PR-PID-007	2 of 2	New	Soft	PLC	Valve - Indication - Position	-	-	-	-	-	03-RCP-201	-	
B	03-XV-247	03-X-247	Filter Tank 4 Backwash Supply	03-ZSO-247	Filter Tank 4 Backwash Supply Valve Position Switch Open	17805-PR-PID-007	2 of 2	New	DI	PLC	Valve - Switch - Position	-	24 VDC	-	-	No	Field	03-RCP-201	

INSTRUMENT INDEX

Rev	Equipment No	Loop Number	Loop Service	Tag Number	Tag Description	P&ID	Sheet	Status	IO Type Name	System	Instrument Type	Power Voltage	Control Voltage	Signal	Power / Current	UPS Powered	Location	Wired To/From	Notes
B	-	03-X-247	Filter Tank 4 Backwash Supply	03-ZIO-247	Filter Tank 4 Backwash Supply Valve Position Indication Open	17805-PR-PID-007	2 of 2	New	Soft	PLC	Valve - Indication - Position	-	-	-	-	-	03-RCP-201	-	
B	03-XV-247	03-X-247	Filter Tank 4 Backwash Supply	03-XS-247	Filter Tank 4 Backwash Supply Valve Fault	17805-PR-PID-007	2 of 2	New	DI	PLC	Valve - Actuator - Fault	-	24 VDC	-	-	No	Field	03-RCP-201	
B	-	03-X-247	Filter Tank 4 Backwash Supply	03-XSA-247	Filter Tank 4 Backwash Supply Valve Fault Alarm	17805-PR-PID-007	2 of 2	New	Soft	PLC	Controller - Alarm - Discrete	-	-	-	-	-	03-RCP-201	-	
B	03-XV-247	03-X-247	Filter Tank 4 Backwash Supply	03-XHS-247	Filter Tank 4 Backwash Supply Valve Local/Remote Switch	17805-PR-PID-007	2 of 2	New	DI	PLC	Valve - Switch - Local/Remote	-	24 VDC	-	-	No	Field	03-RCP-201	
B	-	03-X-247	Filter Tank 4 Backwash Supply	03-XAR-247	Filter Tank 4 Backwash Supply Valve Remote Indication	17805-PR-PID-007	2 of 2	New	Soft	PLC	Valve - Indication - Remote	-	-	-	-	-	03-RCP-201	-	
B	-	03-L-266A	Filter Tank 5 Effluent to Clearwell	03-LV-266A	Filter Tank 5 Effluent to Clearwell Valve	17805-PR-PID-007	2 of 2	New	-	-	Valve - Control - Butterfly	-	-	-	-	-	Field	-	
B	03-LV-266A	03-L-266A	Filter Tank 5 Effluent to Clearwell	03-LY-266A	Filter Tank 5 Effluent to Clearwell Valve Actuator	17805-PR-PID-007	2 of 2	New	-	-	Valve - Control - Actuator - Electric	120 VAC	-	-	0.43kW	Yes	Field	03-RCP-201	
B	03-LV-266A	03-L-266A	Filter Tank 5 Effluent to Clearwell	03-LC-266A	Filter Tank 5 Effluent to Clearwell Valve Position Output	17805-PR-PID-007	2 of 2	New	AO	PLC	Controller - Position Output	-	-	4-20 mA	-	-	03-RCP-201	Field	
B	03-LV-266A	03-L-266A	Filter Tank 5 Effluent to Clearwell	03-LS-266A	Filter Tank 5 Effluent to Clearwell Valve Fault	17805-PR-PID-007	2 of 2	New	DI	PLC	Valve - Actuator - Fault	-	24 VDC	-	-	No	Field	03-RCP-201	
B	-	03-L-266A	Filter Tank 5 Effluent to Clearwell	03-LSA-266A	Filter Tank 5 Effluent to Clearwell Valve Fault Alarm	17805-PR-PID-007	2 of 2	New	Soft	PLC	Controller - Alarm - Discrete	-	-	-	-	-	03-RCP-201	-	
B	03-LV-266A	03-L-266A	Filter Tank 5 Effluent to Clearwell	03-ZT-266A	Filter Tank 5 Effluent to Clearwell Valve Position Feedback Signal	17805-PR-PID-007	2 of 2	New	AI	PLC	Valve - Position Feedback	-	-	4-20 mA	-	-	Field	03-RCP-201	
B	-	03-L-266A	Filter Tank 5 Effluent to Clearwell	03-ZI-266A	Filter Tank 5 Effluent to Clearwell Valve Position Feedback Indication	17805-PR-PID-007	2 of 2	New	Soft	PLC	Valve - Position Indication	-	-	-	-	-	03-RCP-201	-	
B	03-LV-266A	03-L-266A	Filter Tank 5 Effluent to Clearwell	03-LHS-266A	Filter Tank 5 Effluent to Clearwell Valve Local/Remote Switch	17805-PR-PID-007	2 of 2	New	DI	PLC	Valve - Switch - Local/Remote	-	24 VDC	-	-	No	Field	03-RCP-201	
B	-	03-L-266A	Filter Tank 5 Effluent to Clearwell	03-LAR-266A	Filter Tank 5 Effluent to Clearwell Valve Remote Indication	17805-PR-PID-007	2 of 2	New	Soft	PLC	Valve - Indication - Remote	-	-	-	-	-	03-RCP-201	-	
B	-	03-L-266B	Filter Tank 5 Rinse to Waste	03-LV-266B	Filter Tank 5 Rinse to Waste Valve	17805-PR-PID-007	2 of 2	New	-	-	Valve - Control - Butterfly	-	-	-	-	-	Field	-	
B	03-LV-266B	03-L-266B	Filter Tank 5 Rinse to Waste	03-LY-266B	Filter Tank 5 Rinse to Waste Valve Actuator	17805-PR-PID-007	2 of 2	New	-	-	Valve - Control - Actuator - Electric	120 VAC	-	-	0.43kW	Yes	Field	03-RCP-201	
B	03-LV-266B	03-L-266B	Filter Tank 5 Rinse to Waste	03-LC-266B	Filter Tank 5 Rinse to Waste Valve Position Output	17805-PR-PID-007	2 of 2	New	AO	PLC	Controller - Position Output	-	-	4-20 mA	-	-	03-RCP-201	Field	
B	03-LV-266B	03-L-266B	Filter Tank 5 Rinse to Waste	03-LS-266B	Filter Tank 5 Rinse to Waste Valve Fault	17805-PR-PID-007	2 of 2	New	DI	PLC	Valve - Actuator - Fault	-	24 VDC	-	-	No	Field	03-RCP-201	
B	-	03-L-266B	Filter Tank 5 Rinse to Waste	03-LSA-266B	Filter Tank 5 Rinse to Waste Valve Fault Alarm	17805-PR-PID-007	2 of 2	New	Soft	PLC	Controller - Alarm - Discrete	-	-	-	-	-	03-RCP-201	-	
B	03-LV-266B	03-L-266B	Filter Tank 5 Rinse to Waste	03-ZT-266B	Filter Tank 5 Rinse to Waste Valve Position Feedback Signal	17805-PR-PID-007	2 of 2	New	AI	PLC	Valve - Position Feedback	-	-	4-20 mA	-	-	Field	03-RCP-201	
B	-	03-L-266B	Filter Tank 5 Rinse to Waste	03-ZI-266B	Filter Tank 5 Rinse to Waste Valve Position Feedback Indication	17805-PR-PID-007	2 of 2	New	Soft	PLC	Valve - Position Indication	-	-	-	-	-	03-RCP-201	-	
B	03-LV-266B	03-L-266B	Filter Tank 5 Rinse to Waste	03-LHS-266B	Filter Tank 5 Rinse to Waste Valve Local/Remote Switch	17805-PR-PID-007	2 of 2	New	DI	PLC	Valve - Switch - Local/Remote	-	24 VDC	-	-	No	Field	03-RCP-201	
B	-	03-L-266B	Filter Tank 5 Rinse to Waste	03-LAR-266B	Filter Tank 5 Rinse to Waste Valve Remote Indication	17805-PR-PID-007	2 of 2	New	Soft	PLC	Valve - Indication - Remote	-	-	-	-	-	03-RCP-201	-	
B	-	03-X-267	Filter Tank 5 Backwash Supply	03-XV-267	Filter Tank 5 Backwash Supply Valve	17805-PR-PID-007	2 of 2	New	-	-	Valve - Control - Butterfly	-	-	-	-	-	Field	-	
B	03-XV-267	03-X-267	Filter Tank 5 Backwash Supply	03-XY-267	Filter Tank 5 Backwash Supply Valve Actuator	17805-PR-PID-007	2 of 2	New	-	-	Valve - Control - Actuator - Electric	120 VAC	-	-	0.43kW	Yes	Field	03-RCP-201	
B	03-XV-267	03-X-267	Filter Tank 5 Backwash Supply	03-XC-267	Filter Tank 5 Backwash Supply Valve Position Output	17805-PR-PID-007	2 of 2	New	DO	PLC	Controller - Position Output	-	24 VDC	-	-	-	03-RCP-201	Field	De-energize to close
B	03-XV-267	03-X-267	Filter Tank 5 Backwash Supply	03-ZSC-267	Filter Tank 5 Backwash Supply Valve Position Switch Closed	17805-PR-PID-007	2 of 2	New	DI	PLC	Valve - Switch - Position	-	24 VDC	-	-	No	Field	03-RCP-201	
B	-	03-X-267	Filter Tank 5 Backwash Supply	03-ZIC-267	Filter Tank 5 Backwash Supply Valve Position Indication Closed	17805-PR-PID-007	2 of 2	New	Soft	PLC	Valve - Indication - Position	-	-	-	-	-	03-RCP-201	-	
B	03-XV-267	03-X-267	Filter Tank 5 Backwash Supply	03-ZSO-267	Filter Tank 5 Backwash Supply Valve Position Switch Open	17805-PR-PID-007	2 of 2	New	DI	PLC	Valve - Switch - Position	-	24 VDC	-	-	No	Field	03-RCP-201	
B	-	03-X-267	Filter Tank 5 Backwash Supply	03-ZIO-267	Filter Tank 5 Backwash Supply Valve Position Indication Open	17805-PR-PID-007	2 of 2	New	Soft	PLC	Valve - Indication - Position	-	-	-	-	-	03-RCP-201	-	
B	03-XV-267	03-X-267	Filter Tank 5 Backwash Supply	03-XS-267	Filter Tank 5 Backwash Supply Valve Fault	17805-PR-PID-007	2 of 2	New	DI	PLC	Valve - Actuator - Fault	-	24 VDC	-	-	No	Field	03-RCP-201	
B	-	03-X-267	Filter Tank 5 Backwash Supply	03-XSA-267	Filter Tank 5 Backwash Supply Valve Fault Alarm	17805-PR-PID-007	2 of 2	New	Soft	PLC	Controller - Alarm - Discrete	-	-	-	-	-	03-RCP-201	-	
B	03-XV-267	03-X-267	Filter Tank 5 Backwash Supply	03-XHS-267	Filter Tank 5 Backwash Supply Valve Local/Remote Switch	17805-PR-PID-007	2 of 2	New	DI	PLC	Valve - Switch - Local/Remote	-	24 VDC	-	-	No	Field	03-RCP-201	
B	-	03-X-267	Filter Tank 5 Backwash Supply	03-XAR-267	Filter Tank 5 Backwash Supply Valve Remote Indication	17805-PR-PID-007	2 of 2	New	Soft	PLC	Valve - Indication - Remote	-	-	-	-	-	03-RCP-201	-	
B	-	03-L-286A	Filter Tank 6 Effluent to Clearwell	03-LV-286A	Filter Tank 6 Effluent to Clearwell Valve	17805-PR-PID-007	2 of 2	New	-	-	Valve - Control - Butterfly	-	-	-	-	-	Field	-	
B	03-LV-286A	03-L-286A	Filter Tank 6 Effluent to Clearwell	03-LY-286A	Filter Tank 6 Effluent to Clearwell Valve Actuator	17805-PR-PID-007	2 of 2	New	-	-	Valve - Control - Actuator - Electric	120 VAC	-	-	0.43kW	Yes	Field	03-RCP-201	
B	03-LV-286A	03-L-286A	Filter Tank 6 Effluent to Clearwell	03-LC-286A	Filter Tank 6 Effluent to Clearwell Valve Position Output	17805-PR-PID-007	2 of 2	New	AO	PLC	Controller - Position Output	-	-	4-20 mA	-	-	03-RCP-201	Field	
B	03-LV-286A	03-L-286A	Filter Tank 6 Effluent to Clearwell	03-LS-286A	Filter Tank 6 Effluent to Clearwell Valve Fault	17805-PR-PID-007	2 of 2	New	DI	PLC	Valve - Actuator - Fault	-	24 VDC	-	-	No	Field	03-RCP-201	
B	-	03-L-286A	Filter Tank 6 Effluent to Clearwell	03-LSA-286A	Filter Tank 6 Effluent to Clearwell Valve Fault Alarm	17805-PR-PID-007	2 of 2	New	Soft	PLC	Controller - Alarm - Discrete	-	-	-	-	-	03-RCP-201	-	
B	03-LV-286A	03-L-286A	Filter Tank 6 Effluent to Clearwell	03-ZT-286A	Filter Tank 6 Effluent to Clearwell Valve Position Feedback Signal	17805-PR-PID-007	2 of 2	New	AI	PLC	Valve - Position Feedback	-	-	4-20 mA	-	-	Field	03-RCP-201	
B	-	03-L-286A	Filter Tank 6 Effluent to Clearwell	03-ZI-286A	Filter Tank 6 Effluent to Clearwell Valve Position Feedback Indication	17805-PR-PID-007	2 of 2	New	Soft	PLC	Valve - Position Indication	-	-	-	-	-	03-RCP-201	-	
B	03-LV-286A	03-L-286A	Filter Tank 6 Effluent to Clearwell	03-LHS-286A	Filter Tank 6 Effluent to Clearwell Valve Local/Remote Switch	17805-PR-PID-007	2 of 2	New	DI	PLC	Valve - Switch - Local/Remote	-	24 VDC	-	-	No	Field	03-RCP-201	
B	-	03-L-286A	Filter Tank 6 Effluent to Clearwell	03-LAR-286A	Filter Tank 6 Effluent to Clearwell Valve Remote Indication	17805-PR-PID-007	2 of 2	New	Soft	PLC	Valve - Indication - Remote	-	-	-	-	-	03-RCP-201	-	
B	-	03-L-286B	Filter Tank 6 Rinse to Waste	03-LV-286B	Filter Tank 6 Rinse to Waste Valve	17805-PR-PID-007	2 of 2	New	-	-	Valve - Control - Butterfly	-	-	-	-	-	Field	-	
B	03-LV-286B	03-L-286B	Filter Tank 6 Rinse to Waste	03-LY-286B	Filter Tank 6 Rinse to Waste Valve Actuator	17805-PR-PID-007	2 of 2	New	-	-	Valve - Control - Actuator - Electric	120 VAC	-	-	0.43kW	Yes	Field	03-RCP-201	
B	03-LV-286B	03-L-286B	Filter Tank 6 Rinse to Waste	03-LC-286B	Filter Tank 6 Rinse to Waste Valve Position Output	17805-PR-PID-007	2 of 2	New	AO	PLC	Controller - Position Output	-	-	4-20 mA	-	-	03-RCP-201	Field	
B	03-LV-286B	03-L-286B	Filter Tank 6 Rinse to Waste	03-LS-286B	Filter Tank 6 Rinse to Waste Valve Fault	17805-PR-PID-007	2 of 2	New	DI	PLC	Valve - Actuator - Fault	-	24 VDC	-	-	No	Field	03-RCP-201	
B	-	03-L-286B	Filter Tank 6 Rinse to Waste	03-LSA-286B	Filter Tank 6 Rinse to Waste Valve Fault Alarm	17805-PR-PID-007	2 of 2	New	Soft	PLC	Controller - Alarm - Discrete	-	-	-	-	-	03-RCP-201	-	
B	03-LV-286B	03-L-286B	Filter Tank 6 Rinse to Waste	03-ZT-286B	Filter Tank 6 Rinse to Waste Valve Position Feedback Signal	17805-PR-PID-007	2 of 2	New	AI	PLC	Valve - Position Feedback	-	-	4-20 mA	-	-	Field	03-RCP-201	
B	-	03-L-286B	Filter Tank 6 Rinse to Waste	03-ZI-286B	Filter Tank 6 Rinse to Waste Valve Position Feedback Indication	17805-PR-PID-007	2 of 2	New	Soft	PLC	Valve - Position Indication	-	-	-	-	-	03-RCP-201	-	
B	03-LV-286B	03-L-286B	Filter Tank 6 Rinse to Waste	03-LHS-286B	Filter Tank 6 Rinse to Waste Valve Local/Remote Switch	17805-PR-PID-007	2 of 2	New	DI	PLC	Valve - Switch - Local/Remote	-	24 VDC	-	-	No	Field	03-RCP-201	
B	-	03-L-286B	Filter Tank 6 Rinse to Waste	03-LAR-286B	Filter Tank 6 Rinse to Waste Valve Remote Indication	17805-PR-PID-007	2 of 2	New	Soft	PLC	Valve - Indication - Remote	-	-	-	-	-	03-RCP-201	-	
B	-	03-X-287	Filter Tank 6 Backwash Supply	03-XV-287	Filter Tank 6 Backwash Supply Valve	17805-PR-PID-007	2 of 2	New	-	-	Valve - Control - Butterfly	-	-	-	-	-	Field	-	
B	03-XV-287	03-X-287	Filter Tank 6 Backwash Supply	03-XY-287	Filter Tank 6 Backwash Supply Valve Actuator	17805-PR-PID-007	2 of 2	New	-	-	Valve - Control - Actuator - Electric	120 VAC	-	-	0.43kW	Yes	Field	03-RCP-201	
B	03-XV-287	03-X-287	Filter Tank 6 Backwash Supply	03-XC-287	Filter Tank 6 Backwash Supply Valve Position Output	17805-PR-PID-007	2 of 2	New	DO	PLC	Controller - Position Output	-	24 VDC	-	-	-	03-RCP-201	Field	De-energize to close
B	03-XV-287	03-X-287	Filter Tank 6 Backwash Supply	03-ZSC-287	Filter Tank 6 Backwash Supply Valve Position Switch Closed	17805-PR-PID-007	2 of 2	New	DI	PLC	Valve - Switch - Position	-	24 VDC	-	-	No	Field	03-RCP-201	
B	-	03-X-287	Filter Tank 6 Backwash Supply	03-ZIC-287	Filter Tank 6 Backwash Supply Valve Position Indication Closed	17805-PR-PID-007	2 of 2	New	Soft	PLC	Valve - Indication - Position	-	-	-	-	-	03-RCP-201	-	
B	03-XV-287	03-X-287	Filter Tank 6 Backwash Supply	03-ZSO-287	Filter Tank 6 Backwash Supply Valve Position Switch Open	17805-PR-PID-007	2 of 2	New	DI	PLC	Valve - Switch - Position	-	24 VDC	-	-	No	Field	03-RCP-201	
B	-	03-X-287	Filter Tank 6 Backwash Supply	03-ZIO-287	Filter Tank 6 Backwash Supply Valve Position Indication Open	17805-PR-PID-007	2 of 2	New	Soft	PLC	Valve - Indication - Position	-	-	-	-	-	03-RCP-201	-	
B	03-XV-287	03-X-287	Filter Tank 6 Backwash Supply	03-XS-287	Filter Tank 6 Backwash Supply Valve Fault	17805-PR-PID-007	2 of 2	New	DI	PLC	Valve - Actuator - Fault	-	24 VDC	-	-	No	Field	03-RCP-201	
B	-	03-X-287	Filter Tank 6 Backwash Supply	03-XSA-287	Filter Tank 6 Backwash Supply Valve Fault Alarm	17805-PR-PID-007	2 of 2	New	Soft	PLC	Controller - Alarm - Discrete	-	-	-	-	-	03-RCP-201	-	
B	03-XV-287	03-X-287	Filter Tank 6 Backwash Supply	03-XHS-287	Filter Tank 6 Backwash Supply Valve Local/Remote Switch	17805-PR-PID-007	2 of 2	New	DI	PLC	Valve - Switch - Local/Remote	-	24 VDC	-	-	No	Field	03-RCP-201	
B	-	03-X-287	Filter Tank 6 Backwash Supply	03-XAR-287	Filter Tank 6 Backwash Supply Valve Remote Indication	17805-PR-PID-007	2 of 2	New	Soft	PLC	Valve - Indication - Remote	-	-	-	-	-	03-RCP-201	-	
A	-	03-P-195	Backwash Supply	03-PSV-195	Backwash Supply Water PSV	17805-PR-PID-008	1 of 1	New	-	-	Valve - Pressure Relief (PSV)	-	-	-	-	-	Field	-	
B	03-FIT-197	03-F-197	Backwash Supply	03-FIT-197	Backwash Supply Flowmeter	17805-PR-PID-008	1 of 1	By Others	AI	PLC	Flow - Electromagnetic Flowmeter	Note 1	24 VDC	4-20 mA	-	No	Field	02-LCP-001	Supplied and Powered By Others. Only 4-20mA flow signal to AWC PLC.
B	-	03-F-197	Backwash Supply	03-FI-197	Backwash Supply Flow Indication	17805-PR-PID-008	1 of 1	New	Soft	PLC	Flow - Indication	-	-	-	-	-	02-LCP-001	-	
B	03-FV-196	03-F-196	Backwash Supply	03-FV-196	Backwash Supply Valve	17805-PR-PID-008	1 of 1	By Others	-	-	Valve - Butterfly	-	-	-	-	-	Field	-	Valve supplied, installed, and powered by others. Control by AWC.
B	03-FV-196	03-F-196	Backwash Supply	03-FC-196	Backwash Supply Valve Position Output Signal	17805-PR-PID-008	1 of 1	New	AO	PLC	Controller - Valve Position Output	-	-	4-20 mA	-	-	02-LCP-001	Field	
B	03-FV-196	03-F-196	Backwash Supply	03-FZT-196	Backwash Supply Valve Position Feedback Signal	17805-PR-PID-008	1 of 1	New	AI	PLC	Valve - Position Feedback	-	-	4-20 mA	-	-	Field	02-LCP-001	
B	-	03-F-196	Backwash Supply	03-FZI-196	Backwash Supply Valve Position Feedback Indication	17805-PR-PID-008	1 of 1	New	Soft	PLC	Valve - Indication - Position	-	-	-	-	-	02-LCP-001	-	
B	03-FV-196	03-F-196	Backwash Supply	03-FS-196	Backwash Supply Valve Fault Signal	17805-PR-PID-008	1 of 1	New	DI	PLC	Valve - Actuator Fault Output	-	24 VDC	-	-	No	Field	02-LCP-001	
B	-	03-F-196	Backwash Supply	03-FA-196	Backwash Supply Valve Fault Alarm	17805-PR-PID-008	1 of 1	New	Soft	PLC	Valve - Alarm - Fault	-	-	-	-	-	02-LCP-001	-	
B	-	03-P-198	Backwash Supply	03-PCV-198	Backwash Supply Pressure Reducing Valve	17805-PR-PID-008	1 of 1	By Others	-	-	Valve - Pressure Regulator	-	-	-	-	-	Field	-	Supplied and installed by Others.
B	03-PCV-198	03-P-198	Backwash Supply	03-PV-198	Backwash Supply Pressure Reducing Valve Shutoff Solenoid	17805-PR-PID-008	1 of 1	New	DO	PLC	Valve - 2-Way Solenoid	-	24 VDC	-	-	No	Field	02-LCP-001	Supplied and installed by Others. Control by AWC
B	-	02-E-001	ESD System Shutdown	02-XHA-001	Emergency Stop Pushbutton Alarm	17805-PR-PID-010	1 of 1	New	Soft	PLC	Switch - ESD Pushbutton Alarm	-	-	-	-	-	02-LCP-001	-	
B	02-ESR-001	02-E-001	ESD System Shutdown	02-XS-001	Emergency Stop Relay	17805-PR-PID-010	1 of 1	New	DI	PLC	Relay - Emergency Stop Signal	-	24 VDC	-	-	-	02-LCP-001	02-LCP-001	
B	-	02-E-001	ESD System Shutdown	02-XA-001A	Emergency Stop Relay Alarm	17805-PR-PID-010	1 of 1	New	Soft	PLC	Relay - Emergency Stop Alarm	-	-	-	-	-	02-LCP-001	-	
B	02-ESR-001	02-E-001	ESD System Shutdown	02-XA-001B	Emergency Stop Relay Alarm Contact	17805-PR-PID-010	1 of 1	New	-	-	Relay - Emergency Stop Alarm	-	-	-	-	-	02-LCP-001	Main Control Panel (MCP)	E-Stop Contact from AWC to Client

INSTRUMENT INDEX

Rev	Equipment No	Loop Number	Loop Service	Tag Number	Tag Description	P&ID	Sheet	Status	IO Type Name	System	Instrument Type	Power Voltage	Control Voltage	Signal	Power / Current	UPS Powered	Location	Wired To/From	Notes
B	02-SP-001	02-E-720	120 VAC Surge Protector	02-ES-720	120 VAC Surge Protector Alarm Contact	17805-PR-PID-010	1 of 1	New	DI	PLC	Contact - 120 VAC Surge Protector	-	24 VDC	-	-	-	02-LCP-001	02-LCP-001	
B	-	02-E-720	120 VAC Surge Protector	02-EA-720	120 VAC Surge Protector Alarm	17805-PR-PID-010	1 of 1	New	Soft	PLC	Alarm - 120 VAC Surge Protector	-	-	-	-	-	02-LCP-001	-	
B	02-PS-001/002	02-E-724	24 VDC Power Supply	02-ES-724	24 VDC Power Supply Alarm Contact	17805-PR-PID-010	1 of 1	New	DI	PLC	Contact - 24 VDC Power Supply	-	24 VDC	-	-	-	02-LCP-001	02-LCP-001	2 power supplies wired in parallel.
B	-	02-E-724	24 VDC Power Supply	02-EA-724	24 VDC Power Supply Alarm	17805-PR-PID-010	1 of 1	New	Soft	PLC	Alarm - 24 VDC Power Supply	-	-	-	-	-	02-LCP-001	-	
B	02-UPS-001	02-E-725	UPS	02-ES-725	UPS Multiple Alarm Contact	17805-PR-PID-010	1 of 1	New	DI	PLC	Contact - UPS	-	24 VDC	-	-	-	02-LCP-001	02-LCP-001	
B	-	02-E-725	UPS	02-EA-725	UPS Multiple Alarm	17805-PR-PID-010	1 of 1	New	Soft	PLC	Alarm - UPS	-	-	-	-	-	02-LCP-001	-	
B	02-UPS-001	02-E-726	UPS	02-ES-726	UPS Utility Fail Alarm Contact	17805-PR-PID-010	1 of 1	New	DI	PLC	Contact - UPS	-	24 VDC	-	-	-	02-LCP-001	02-LCP-001	
B	-	02-E-726	UPS	02-EA-726	UPS Utility Fail Alarm	17805-PR-PID-010	1 of 1	New	Soft	PLC	Alarm - UPS	-	-	-	-	-	02-LCP-001	-	
B	03-RCP-101	03-X-101	ESD System Shutdown	03-XHS-101	ESD System Shutdown - Local Switch	17805-PR-PID-010	1 of 1	New	-	ELEC	Panel Mounted E-STOP Pushbutton	-	-	-	-	-	03-RCP-101	02-LCP-001	Hardwired into Electrical Power Switch
B	03-ESB-101	03-X-101	ESD System Shutdown	03-XHS-101	ESD System Shutdown - Local Switch	17805-PR-PID-010	1 of 1	New	DI	PLC	Panel Mounted E-STOP Pushbutton	-	See Note	-	-	-	03-RCP-101	03-RCP-101	24 VDC for contacts, 120 VAC for Coil
B	-	03-E-101	ESD System Shutdown	03-XHA-101	Emergency Stop Pushbutton Alarm	17805-PR-PID-010	1 of 1	New	Soft	PLC	Switch - ESD Pushbutton Alarm	-	-	-	-	-	03-RCP-101	-	
B	03-SP-001	03-E-720A	120 VAC Surge Protector	03-ES-720A	120 VAC Surge Protector Alarm Contact	17805-PR-PID-010	1 of 1	New	DI	PLC	Contact - 120 VAC Surge Protector	-	24 VDC	-	-	-	03-RCP-101	03-RCP-101	
B	-	03-E-720A	120 VAC Surge Protector	03-EA-720A	120 VAC Surge Protector Alarm	17805-PR-PID-010	1 of 1	New	Soft	PLC	Alarm - 120 VAC Surge Protector	-	-	-	-	-	03-RCP-101	-	
B	03-PS-001	03-E-724A	24 VDC Power Supply	03-ES-724A	24 VDC Power Supply Alarm Contact	17805-PR-PID-010	1 of 1	New	DI	PLC	Contact - 24 VDC Power Supply	-	24 VDC	-	-	-	03-RCP-101	03-RCP-101	
B	-	03-E-724A	24 VDC Power Supply	03-EA-724A	24 VDC Power Supply Alarm	17805-PR-PID-010	1 of 1	New	Soft	PLC	Alarm - 24 VDC Power Supply	-	-	-	-	-	03-RCP-101	-	
B	03-UPS-001	03-E-725A	UPS	03-ES-725A	UPS Multiple Alarm Contact	17805-PR-PID-010	1 of 1	New	DI	PLC	Contact - UPS	-	24 VDC	-	-	-	03-RCP-101	03-RCP-101	
B	-	03-E-725A	UPS	03-EA-725A	UPS Multiple Alarm	17805-PR-PID-010	1 of 1	New	Soft	PLC	Alarm - UPS	-	-	-	-	-	03-RCP-101	-	
B	03-UPS-001	03-E-726A	UPS	03-ES-726A	UPS Utility Fail Alarm Contact	17805-PR-PID-010	1 of 1	New	DI	PLC	Contact - UPS	-	24 VDC	-	-	-	03-RCP-101	03-RCP-101	
B	-	03-E-726A	UPS	03-EA-726A	UPS Utility Fail Alarm	17805-PR-PID-010	1 of 1	New	Soft	PLC	Alarm - UPS	-	-	-	-	-	03-RCP-101	-	
B	03-RCP-201	03-X-201	ESD System Shutdown	03-XHS-201	ESD System Shutdown - Local Switch	17805-PR-PID-010	1 of 1	New	-	ELEC	Panel Mounted E-STOP Pushbutton	-	-	-	-	-	03-RCP-201	02-LCP-001	Hardwired into Electrical Power Switch
B	03-ESB-201	03-X-201	ESD System Shutdown	03-XHS-201	ESD System Shutdown - Local Switch	17805-PR-PID-010	1 of 1	New	DI	PLC	Panel Mounted E-STOP Pushbutton	-	See Note	-	-	-	03-RCP-201	03-RCP-201	24 VDC for contacts, 120 VAC for Coil
B	-	03-E-201	ESD System Shutdown	03-XHA-201	Emergency Stop Pushbutton Alarm	17805-PR-PID-010	1 of 1	New	Soft	PLC	Switch - ESD Pushbutton Alarm	-	-	-	-	-	03-RCP-201	-	
B	03-SP-001	03-E-720B	120 VAC Surge Protector	03-ES-720B	120 VAC Surge Protector Alarm Contact	17805-PR-PID-010	1 of 1	New	DI	PLC	Contact - 120 VAC Surge Protector	-	24 VDC	-	-	-	03-RCP-201	03-RCP-201	
B	-	03-E-720B	120 VAC Surge Protector	03-EA-720B	120 VAC Surge Protector Alarm	17805-PR-PID-010	1 of 1	New	Soft	PLC	Alarm - 120 VAC Surge Protector	-	-	-	-	-	03-RCP-201	-	
B	03-PS-001	03-E-724B	24 VDC Power Supply	03-ES-724B	24 VDC Power Supply Alarm Contact	17805-PR-PID-010	1 of 1	New	DI	PLC	Contact - 24 VDC Power Supply	-	24 VDC	-	-	-	03-RCP-201	03-RCP-201	
B	-	03-E-724B	24 VDC Power Supply	03-EA-724B	24 VDC Power Supply Alarm	17805-PR-PID-010	1 of 1	New	Soft	PLC	Alarm - 24 VDC Power Supply	-	-	-	-	-	03-RCP-201	-	
B	03-UPS-001	03-E-725B	UPS	03-ES-725B	UPS Multiple Alarm Contact	17805-PR-PID-010	1 of 1	New	DI	PLC	Contact - UPS	-	24 VDC	-	-	-	03-RCP-201	03-RCP-201	
B	-	03-E-725B	UPS	03-EA-725B	UPS Multiple Alarm	17805-PR-PID-010	1 of 1	New	Soft	PLC	Alarm - UPS	-	-	-	-	-	03-RCP-201	-	
B	03-UPS-001	03-E-726B	UPS	03-ES-726B	UPS Utility Fail Alarm Contact	17805-PR-PID-010	1 of 1	New	DI	PLC	Contact - UPS	-	24 VDC	-	-	-	03-RCP-201	03-RCP-201	
B	-	03-E-726B	UPS	03-EA-726B	UPS Utility Fail Alarm	17805-PR-PID-010	1 of 1	New	Soft	PLC	Alarm - UPS	-	-	-	-	-	03-RCP-201	-	

SOLENOID VALVE

Document No:	17805-IC-DAS-030		
Client Name:	City & Borough of Wrangell	**Project No.:** 17805	9087A 198 St, Langley, BC, V1M 3B1
Project Name:	Wrangell WTP		Telephone No.: +1 (604) 936-4217

G - GENERAL					
G.1	Tag Number		02-XV-132,02-XV-232,02-XV-332		
G.2	Service		DAF Train #1/#2/#3 Saturator Air Supply		
G.3	P&ID No.	Line / Equipment No.	17805-PR-PID-003	1/2"-PA-801/802/803-SS4	
G.4	Line Size & Schedule	Line Material	1/2" SCH40	SS304	
G.5	Electrical Area Class	Temperature Code	General Purpose, Washdown	N/A	
G.6	Location	Ambient Temperature- °F	Field	59-86	
P - PROCESS					
P.1	Fluid	State	Air	Gas	
P.2	Corrosive / Erosive	Sour Service - ppm	No	0	
P.3	Design Pressure - psi (g)	Design Temperature - °F	150	176	
	Process Conditions		@Min	@Norm	@Max
P.4	Flow Rate - SCFM		8.95	8.95	8.95
P.5	Inlet Pressure - psi (g)		65	110	120
P.6	Temperature -°F		104	113	122
P.7	Maximum Shutoff Pressure - psi (g)		150		
P.8	Atmospheric Pressure - psi (a)		14.25		
B - VALVE BODY					
B.1	Type		Solenoid		
B.2	Body Size	Connection & Rating	1/2"	FNPT, 150#	
B.3	Face-to-Face Dimension		2.75"		
B.4	Body Material	Bonnet Material	Brass	Brass	
B.5	Plunger/Piston Material	Seat Material	430F Stainless Steel	Nitrile or Buna-N	
B.6	Connections Material	Bolting Material	Brass	N/A	
B.7	Flow Direction	Leakage Class	Yes	Class IV	
B.8	Break Torque	Re-seat Torque	N/A	N/A	
T - VALVE ACTUATOR					
T.1	Manufacturer	Model Number	ASCO	-	
T.2	Type	Size	2 positon 1 way	1/2"	
T.3	Power Voltage	Maximum Current Draw	120 VAC	0.58 A	
T.4	Electrical Connection Size	Fail Position	DIN 43650	Fail Close	
T.5	Enclosure Rating		IP65		
C - VALVE ACCESSORIES					
C.1	Local Disconnection Switch	Pushbuttons/dial	No	Note 1	
M - MANUFACTURER					
M.1	Manufacturer	Model No.	ASCO	SC8210G094MO-120VAC 60Hz	
M.2	Serial Number		N/A		
N - NOTES					
N.1	Manual Override on valve to be provided by vendor				
N.2					
N.3					
N.4					
N.5					

PRELIMINARY
NOT FOR CONSTRUCTION
THE INFORMATION ON THIS DRAWING IS INTENDED FOR CONCEPTUAL DEVELOPMENT, PRELIMINARY DESIGN, OR FOR GUIDANCE ONLY. THIS DOCUMENT SHOULD NOT BE CONSIDERED A FINALIZED PROFESSIONAL WORK PRODUCT.

R - REVISIONS

	Rev	Date	Rev Description	Originator	Checker	Approver
R.1	A	02 Feb 23	Issued for Review	CV CV	MTB MTB	MSM MSM
R.2						
R.3						

CLIENT NAME: CITY & BOROUGH OF WRANGELL

PROJECT NAME: WRANGELL WTP

PROJECT NO.: 17805

DOCUMENT NAME: SERIAL INTERFACE TABLES

DOCUMENT NO.: 17805-IC-LST-005

A	16 Jan 23	Issued for Review	TB TB	MTB MTB	MSM
Rev	**Date**	**Revision Description**	**Originator**	**Checker**	**Approver**

Client To AWC PLC

R1v	No.	AWC					Client		
		Tag No.	Status / SP	Tag Description	AWC Consumed Tag	Type	Tag No.	Tag Description	Notes
A	1		Setpoint	Reset All Active Alarms	AWCPLC.FromClient.Alarm[0].INT[0].0	Boolean			
A	2				AWCPLC.FromClient.Alarm[0].INT[0].1	Boolean			
A	3				AWCPLC.FromClient.Alarm[0].INT[0].2	Boolean			
A	4				AWCPLC.FromClient.Alarm[0].INT[0].3	Boolean			
A	5				AWCPLC.FromClient.Alarm[0].INT[0].4	Boolean			
A	6				AWCPLC.FromClient.Alarm[0].INT[0].5	Boolean			
A	7				AWCPLC.FromClient.Alarm[0].INT[0].6	Boolean			
A	8				AWCPLC.FromClient.Alarm[0].INT[0].7	Boolean			
A	9				AWCPLC.FromClient.Alarm[0].INT[0].8	Boolean			
A	10				AWCPLC.FromClient.Alarm[0].INT[0].9	Boolean			
A	11				AWCPLC.FromClient.Alarm[0].INT[0].10	Boolean			
A	12				AWCPLC.FromClient.Alarm[0].INT[0].11	Boolean			
A	13				AWCPLC.FromClient.Alarm[0].INT[0].12	Boolean			
A	14				AWCPLC.FromClient.Alarm[0].INT[0].13	Boolean			
A	15				AWCPLC.FromClient.Alarm[0].INT[0].14	Boolean			
A	16				AWCPLC.FromClient.Alarm[0].INT[0].15	Boolean			
A	17		Status	Plant SCADA Heartbeat	AWCPLC.FromClient.Plant[0].INT[0].0	Boolean			
A	18		Setpoint	Plant System Out of Service	AWCPLC.FromClient.Plant[0].INT[0].1	Boolean			
A	19		Setpoint	Plant SCADA Train #1 Start / Hot Standby	AWCPLC.FromClient.Plant[0].INT[0].2	Boolean			
A	20		Setpoint	Plant SCADA Train #2 Start / Hot Standby	AWCPLC.FromClient.Plant[0].INT[0].3	Boolean			
A	21		Setpoint	Plant SCADA Train #3 Start / Hot Standby	AWCPLC.FromClient.Plant[0].INT[0].4	Boolean			
A	22				AWCPLC.FromClient.Plant[0].INT[0].5	Boolean			
A	23				AWCPLC.FromClient.Plant[0].INT[0].6	Boolean			
A	24				AWCPLC.FromClient.Plant[0].INT[0].7	Boolean			
A	25		Setpoint	Plant SCADA Train #1 Out of Service	AWCPLC.FromClient.Plant[0].INT[0].8	Boolean			
A	26		Setpoint	Plant SCADA Train #2 Out of Service	AWCPLC.FromClient.Plant[0].INT[0].9	Boolean			
A	27		Setpoint	Plant SCADA Train #3 Out of Service	AWCPLC.FromClient.Plant[0].INT[0].10	Boolean			
A	28				AWCPLC.FromClient.Plant[0].INT[0].11	Boolean			
A	29				AWCPLC.FromClient.Plant[0].INT[0].12	Boolean			
A	30				AWCPLC.FromClient.Plant[0].INT[0].13	Boolean			
A	31				AWCPLC.FromClient.Plant[0].INT[0].14	Boolean			
A	32				AWCPLC.FromClient.Plant[0].INT[0].15	Boolean			
A	33		Setpoint	Backwash Permissive	AWCPLC.FromClient.Plant[0].INT[1].0	Boolean			
A	34		Status	Backwash Pump Running	AWCPLC.FromClient.Plant[0].INT[1].1	Boolean			
A	35		Status	Air Blower - HOA Switch Auto	AWCPLC.FromClient.Plant[0].INT[1].2	Boolean			
A	36		Status	Air Blower - HOA Switch Hand	AWCPLC.FromClient.Plant[0].INT[1].3	Boolean			
A	37		Status	Air Blower - Running	AWCPLC.FromClient.Plant[0].INT[1].4	Boolean			
A	38		Status	Air Blower - Fault	AWCPLC.FromClient.Plant[0].INT[1].5	Boolean			
A	39				AWCPLC.FromClient.Plant[0].INT[1].6	Boolean			
A	40				AWCPLC.FromClient.Plant[0].INT[1].7	Boolean			
A	41				AWCPLC.FromClient.Plant[0].INT[1].8	Boolean			
A	42				AWCPLC.FromClient.Plant[0].INT[1].9	Boolean			
A	43				AWCPLC.FromClient.Plant[0].INT[1].10	Boolean			
A	44				AWCPLC.FromClient.Plant[0].INT[1].11	Boolean			
A	45				AWCPLC.FromClient.Plant[0].INT[1].12	Boolean			
A	46				AWCPLC.FromClient.Plant[0].INT[1].13	Boolean			
A	47				AWCPLC.FromClient.Plant[0].INT[1].14	Boolean			
A	48				AWCPLC.FromClient.Plant[0].INT[1].15	Boolean			
A	49		Setpoint	System Flow Control Setpoint	AWCPLC.FromClient.Plant[0].REAL[0]	Real			
A	50				AWCPLC.FromClient.Plant[0].REAL[1]	Real			
A	51				AWCPLC.FromClient.Plant[0].REAL[2]	Real			
A	52				AWCPLC.FromClient.Plant[0].REAL[3]	Real			
A	53				AWCPLC.FromClient.Plant[0].REAL[4]	Real			
A	54				AWCPLC.FromClient.Plant[0].REAL[5]	Real			
A	55				AWCPLC.FromClient.Plant[0].REAL[6]	Real			
A	56				AWCPLC.FromClient.Plant[0].REAL[7]	Real			
A	57				AWCPLC.FromClient.Plant[0].REAL[8]	Real			
A	58				AWCPLC.FromClient.Plant[0].REAL[9]	Real			
A	59				AWCPLC.FromClient.Plant[0].REAL[10]	Real			
A	60				AWCPLC.FromClient.RapidMixer[0].INT[0].0	Boolean			
A	61				AWCPLC.FromClient.RapidMixer[0].INT[0].1	Boolean			
A	62				AWCPLC.FromClient.RapidMixer[0].INT[0].2	Boolean			
A	63				AWCPLC.FromClient.RapidMixer[0].INT[0].3	Boolean			
A	64				AWCPLC.FromClient.RapidMixer[0].INT[0].4	Boolean			
A	65				AWCPLC.FromClient.RapidMixer[0].INT[0].5	Boolean			
A	66				AWCPLC.FromClient.RapidMixer[0].INT[0].6	Boolean			
A	67				AWCPLC.FromClient.RapidMixer[0].INT[0].7	Boolean			
A	68				AWCPLC.FromClient.RapidMixer[0].INT[0].8	Boolean			
A	69				AWCPLC.FromClient.RapidMixer[0].INT[0].9	Boolean			
A	70				AWCPLC.FromClient.RapidMixer[0].INT[0].10	Boolean			
A	71				AWCPLC.FromClient.RapidMixer[0].INT[0].11	Boolean			
A	72				AWCPLC.FromClient.RapidMixer[0].INT[0].12	Boolean			
A	73				AWCPLC.FromClient.RapidMixer[0].INT[0].13	Boolean			
A	74				AWCPLC.FromClient.RapidMixer[0].INT[0].14	Boolean			
A	75				AWCPLC.FromClient.RapidMixer[0].INT[0].15	Boolean			
A	76				AWCPLC.FromClient.RapidMixer[0].REAL[0]	Real			
A	77				AWCPLC.FromClient.RapidMixer[0].REAL[1]	Real			
A	78				AWCPLC.FromClient.RapidMixer[0].REAL[2]	Real			
A	79				AWCPLC.FromClient.RapidMixer[0].REAL[3]	Real			
A	80				AWCPLC.FromClient.RapidMixer[0].REAL[4]	Real			
A	81				AWCPLC.FromClient.RapidMixer[0].REAL[5]	Real			
A	82				AWCPLC.FromClient.RapidMixer[0].REAL[6]	Real			
A	83				AWCPLC.FromClient.RapidMixer[0].REAL[7]	Real			
A	84				AWCPLC.FromClient.RapidMixer[0].REAL[8]	Real			
A	85				AWCPLC.FromClient.RapidMixer[0].REAL[9]	Real			
A	86				AWCPLC.FromClient.RapidMixer[0].REAL[10]	Real			

Client To AWC PLC

R1v	No.	Tag No.	Status / SP	Tag Description	AWC Consumed Tag	Type	Tag No.	Tag Description	Notes
A	87				AWCPLC.FromClient.Train[1].INT[0].0	Boolean			
A	88				AWCPLC.FromClient.Train[1].INT[0].1	Boolean			
A	89				AWCPLC.FromClient.Train[1].INT[0].2	Boolean			
A	90				AWCPLC.FromClient.Train[1].INT[0].3	Boolean			
A	91				AWCPLC.FromClient.Train[1].INT[0].4	Boolean			
A	92				AWCPLC.FromClient.Train[1].INT[0].5	Boolean			
A	93				AWCPLC.FromClient.Train[1].INT[0].6	Boolean			
A	94				AWCPLC.FromClient.Train[1].INT[0].7	Boolean			
A	95				AWCPLC.FromClient.Train[1].INT[0].8	Boolean			
A	96				AWCPLC.FromClient.Train[1].INT[0].9	Boolean			
A	97				AWCPLC.FromClient.Train[1].INT[0].10	Boolean			
A	98				AWCPLC.FromClient.Train[1].INT[0].11	Boolean			
A	99				AWCPLC.FromClient.Train[1].INT[0].12	Boolean			
A	100				AWCPLC.FromClient.Train[1].INT[0].13	Boolean			
A	101				AWCPLC.FromClient.Train[1].INT[0].14	Boolean			
A	102				AWCPLC.FromClient.Train[1].INT[0].15	Boolean			
A	103				AWCPLC.FromClient.Train[1].REAL[0]	Real			
A	104				AWCPLC.FromClient.Train[1].REAL[1]	Real			
A	105				AWCPLC.FromClient.Train[1].REAL[2]	Real			
A	106				AWCPLC.FromClient.Train[1].REAL[3]	Real			
A	107				AWCPLC.FromClient.Train[1].REAL[4]	Real			
A	108				AWCPLC.FromClient.Train[1].REAL[5]	Real			
A	109				AWCPLC.FromClient.Train[2].INT[0].0	Boolean			
A	110				AWCPLC.FromClient.Train[2].INT[0].1	Boolean			
A	111				AWCPLC.FromClient.Train[2].INT[0].2	Boolean			
A	112				AWCPLC.FromClient.Train[2].INT[0].3	Boolean			
A	113				AWCPLC.FromClient.Train[2].INT[0].4	Boolean			
A	114				AWCPLC.FromClient.Train[2].INT[0].5	Boolean			
A	115				AWCPLC.FromClient.Train[2].INT[0].6	Boolean			
A	116				AWCPLC.FromClient.Train[2].INT[0].7	Boolean			
A	117				AWCPLC.FromClient.Train[2].INT[0].8	Boolean			
A	118				AWCPLC.FromClient.Train[2].INT[0].9	Boolean			
A	119				AWCPLC.FromClient.Train[2].INT[0].10	Boolean			
A	120				AWCPLC.FromClient.Train[2].INT[0].11	Boolean			
A	121				AWCPLC.FromClient.Train[2].INT[0].12	Boolean			
A	122				AWCPLC.FromClient.Train[2].INT[0].13	Boolean			
A	123				AWCPLC.FromClient.Train[2].INT[0].14	Boolean			
A	124				AWCPLC.FromClient.Train[2].INT[0].15	Boolean			
A	125				AWCPLC.FromClient.Train[2].REAL[0]	Real			
A	126				AWCPLC.FromClient.Train[2].REAL[1]	Real			
A	127				AWCPLC.FromClient.Train[2].REAL[2]	Real			
A	128				AWCPLC.FromClient.Train[2].REAL[3]	Real			
A	129				AWCPLC.FromClient.Train[2].REAL[4]	Real			
A	130				AWCPLC.FromClient.Train[2].REAL[5]	Real			
A	131				AWCPLC.FromClient.Train[3].INT[0].0	Boolean			
A	132				AWCPLC.FromClient.Train[3].INT[0].1	Boolean			
A	133				AWCPLC.FromClient.Train[3].INT[0].2	Boolean			
A	134				AWCPLC.FromClient.Train[3].INT[0].3	Boolean			
A	135				AWCPLC.FromClient.Train[3].INT[0].4	Boolean			
A	136				AWCPLC.FromClient.Train[3].INT[0].5	Boolean			
A	137				AWCPLC.FromClient.Train[3].INT[0].6	Boolean			
A	138				AWCPLC.FromClient.Train[3].INT[0].7	Boolean			
A	139				AWCPLC.FromClient.Train[3].INT[0].8	Boolean			
A	140				AWCPLC.FromClient.Train[3].INT[0].9	Boolean			
A	141				AWCPLC.FromClient.Train[3].INT[0].10	Boolean			
A	142				AWCPLC.FromClient.Train[3].INT[0].11	Boolean			
A	143				AWCPLC.FromClient.Train[3].INT[0].12	Boolean			
A	144				AWCPLC.FromClient.Train[3].INT[0].13	Boolean			
A	145				AWCPLC.FromClient.Train[3].INT[0].14	Boolean			
A	146				AWCPLC.FromClient.Train[3].INT[0].15	Boolean			
A	147				AWCPLC.FromClient.Train[3].REAL[0]	Real			
A	148				AWCPLC.FromClient.Train[3].REAL[1]	Real			
A	149				AWCPLC.FromClient.Train[3].REAL[2]	Real			
A	150				AWCPLC.FromClient.Train[3].REAL[3]	Real			
A	151				AWCPLC.FromClient.Train[3].REAL[4]	Real			
A	152				AWCPLC.FromClient.Train[3].REAL[5]	Real			

AWC To Client PLC

R1v	No.	AWC					Client		
		Tag No.	Status / SP	Tag Description	AWC Produced Tag	Type	Tag No.	Tag Description	Notes
A	1		Status	Shutdown / Safety Interlock Alarm - Fault	AWCPLC.ToClient.Alarm[0].INT[0].0	Boolean			
A	2		Status	Plant - Alarm Fault	AWCPLC.ToClient.Alarm[0].INT[0].1	Boolean			
A	3		Status	DAF Train #1 - Alarm Fault	AWCPLC.ToClient.Alarm[0].INT[0].2	Boolean			
A	4		Status	DAF Train #2 - Alarm Fault	AWCPLC.ToClient.Alarm[0].INT[0].3	Boolean			
A	5		Status	DAF Train #3 - Alarm Fault	AWCPLC.ToClient.Alarm[0].INT[0].4	Boolean			
A	6		Status	DAF Train #1 Saturator / Recycle - Alarm Fault	AWCPLC.ToClient.Alarm[0].INT[0].5	Boolean			
A	7		Status	DAF Train #2 Saturator / Recycle - Alarm Fault	AWCPLC.ToClient.Alarm[0].INT[0].6	Boolean			
A	8		Status	DAF Train #3 Saturator / Recycle - Alarm Fault	AWCPLC.ToClient.Alarm[0].INT[0].7	Boolean			
A	9		Status	Filter 1 Alarm - Fault	AWCPLC.ToClient.Alarm[0].INT[0].8	Boolean			
A	10		Status	Filter 2 Alarm - Fault	AWCPLC.ToClient.Alarm[0].INT[0].9	Boolean			
A	11		Status	Filter 3 Alarm - Fault	AWCPLC.ToClient.Alarm[0].INT[0].10	Boolean			
A	12		Status	Filter 4 Alarm - Fault	AWCPLC.ToClient.Alarm[0].INT[0].11	Boolean			
A	13		Status	Filter 5 Alarm - Fault	AWCPLC.ToClient.Alarm[0].INT[0].12	Boolean			
A	14		Status	Filter 6 Alarm - Fault	AWCPLC.ToClient.Alarm[0].INT[0].13	Boolean			
A	15		Status	Spare - Reserved for Future Use	AWCPLC.ToClient.Alarm[0].INT[0].14	Boolean			
A	16		Status	Spare - Reserved for Future Use	AWCPLC.ToClient.Alarm[0].INT[0].15	Boolean			
A	17		Status	Air Compressor Alarm - Fault	AWCPLC.ToClient.Alarm[0].INT[1].0	Boolean			
A	18				AWCPLC.ToClient.Alarm[0].INT[1].1	Boolean			
A	19				AWCPLC.ToClient.Alarm[0].INT[1].2	Boolean			
A	20				AWCPLC.ToClient.Alarm[0].INT[1].3	Boolean			
A	21				AWCPLC.ToClient.Alarm[0].INT[1].4	Boolean			
A	22				AWCPLC.ToClient.Alarm[0].INT[1].5	Boolean			
A	23				AWCPLC.ToClient.Alarm[0].INT[1].6	Boolean			
A	24				AWCPLC.ToClient.Alarm[0].INT[1].7	Boolean			
A	25				AWCPLC.ToClient.Alarm[0].INT[1].8	Boolean			
A	26				AWCPLC.ToClient.Alarm[0].INT[1].9	Boolean			
A	27				AWCPLC.ToClient.Alarm[0].INT[1].10	Boolean			
A	28				AWCPLC.ToClient.Alarm[0].INT[1].11	Boolean			
A	29				AWCPLC.ToClient.Alarm[0].INT[1].12	Boolean			
A	30				AWCPLC.ToClient.Alarm[0].INT[1].13	Boolean			
A	31				AWCPLC.ToClient.Alarm[0].INT[1].14	Boolean			
A	32				AWCPLC.ToClient.Alarm[0].INT[1].15	Boolean			
A	33		Status	AWC TO SCADA - Watchdog Heartbeat Signal	AWCPLC.ToClient.Plant[0].INT[0].0	Boolean			
A	34		Status	Plant Operations - Off	AWCPLC.ToClient.Plant[0].INT[0].1	Boolean			
A	35		Status	Plant Operations - Remote / SCADA	AWCPLC.ToClient.Plant[0].INT[0].2	Boolean			
A	36		Status	Plant Operations - Manual / Local	AWCPLC.ToClient.Plant[0].INT[0].3	Boolean			
A	37				AWCPLC.ToClient.Plant[0].INT[0].4	Boolean			
A	38				AWCPLC.ToClient.Plant[0].INT[0].5	Boolean			
A	39		Status	Plant High Flow Mode Active	AWCPLC.ToClient.Plant[0].INT[0].6	Boolean			
A	40		Status	Plant Normal Flow Mode Active	AWCPLC.ToClient.Plant[0].INT[0].7	Boolean			
A	41		Status	Plant Low Flow Mode Active	AWCPLC.ToClient.Plant[0].INT[0].8	Boolean			
A	42				AWCPLC.ToClient.Plant[0].INT[0].9	Boolean			
A	43		Status	Air Compressor Running	AWCPLC.ToClient.Plant[0].INT[0].10	Boolean			
A	44				AWCPLC.ToClient.Plant[0].INT[0].11	Boolean			
A	45				AWCPLC.ToClient.Plant[0].INT[0].12	Boolean			
A	46				AWCPLC.ToClient.Plant[0].INT[0].13	Boolean			
A	47				AWCPLC.ToClient.Plant[0].INT[0].14	Boolean			
A	48				AWCPLC.ToClient.Plant[0].INT[0].15	Boolean			
A	49		Setpoint	Spare - Reserved for Future Use	AWCPLC.ToClient.Plant[0].REAL[0]	Real			
A	50		Status	Spare - Reserved for Future Use	AWCPLC.ToClient.Plant[0].REAL[1]	Real			
A	51		Status	Spare - Reserved for Future Use	AWCPLC.ToClient.Plant[0].REAL[2]	Real			
A	52		Status	Spare - Reserved for Future Use	AWCPLC.ToClient.Plant[0].REAL[3]	Real			
A	53		Status	Spare - Reserved for Future Use	AWCPLC.ToClient.Plant[0].REAL[4]	Real			
A	54		Status	Spare - Reserved for Future Use	AWCPLC.ToClient.Plant[0].REAL[5]	Real			
A	55		Status	Spare - Reserved for Future Use	AWCPLC.ToClient.Plant[0].REAL[6]	Real			
A	56		Status	Spare - Reserved for Future Use	AWCPLC.ToClient.Plant[0].REAL[7]	Real			
A	57		Setpoint	Train Min Flow SP	AWCPLC.ToClient.Plant[0].REAL[8]	Real			
A	58		Setpoint	Train Max Flow SP	AWCPLC.ToClient.Plant[0].REAL[9]	Real			
A	59		Setpoint	Backwash Flow SP	AWCPLC.ToClient.Plant[0].REAL[10]	Real			
A	60				AWCPLC.ToClient.Plant[0].REAL[11]	Real			
A	61				AWCPLC.ToClient.Plant[0].REAL[12]	Real			
A	62				AWCPLC.ToClient.Plant[0].REAL[13]	Real			
A	63				AWCPLC.ToClient.Plant[0].REAL[14]	Real			
A	64				AWCPLC.ToClient.Plant[0].REAL[15]	Real			
A	65		Status	Rapid Mixer #1 - In Auto	AWCPLC.ToClient.RapidMixer[0].INT[0].0	Boolean			
A	66		Status	Rapid Mixer #1 - Running	AWCPLC.ToClient.RapidMixer[0].INT[0].1	Boolean			
A	67		Status	Rapid Mixer #1 - Fault	AWCPLC.ToClient.RapidMixer[0].INT[0].2	Boolean			
A	68		Status	Rapid Mixer #2 - In Auto	AWCPLC.ToClient.RapidMixer[0].INT[0].3	Boolean			
A	69		Status	Rapid Mixer #2 - Running	AWCPLC.ToClient.RapidMixer[0].INT[0].4	Boolean			
A	70		Status	Rapid Mixer #2 - Fault	AWCPLC.ToClient.RapidMixer[0].INT[0].5	Boolean			
A	71		Status	Raw Water Pump Run Request	AWCPLC.ToClient.RapidMixer[0].INT[0].6	Boolean			
A	72		Status	Raw Water Inlet Valve - In Auto	AWCPLC.ToClient.RapidMixer[0].INT[0].7	Boolean			
A	73		Status	Raw Water Inlet Valve - Opened	AWCPLC.ToClient.RapidMixer[0].INT[0].8	Boolean			
A	74		Status	Raw Water Inlet Valve - Fault	AWCPLC.ToClient.RapidMixer[0].INT[0].9	Boolean			
A	75				AWCPLC.ToClient.RapidMixer[0].INT[0].10	Boolean			
A	76				AWCPLC.ToClient.RapidMixer[0].INT[0].11	Boolean			
A	77				AWCPLC.ToClient.RapidMixer[0].INT[0].12	Boolean			
A	78				AWCPLC.ToClient.RapidMixer[0].INT[0].13	Boolean			
A	79				AWCPLC.ToClient.RapidMixer[0].INT[0].14	Boolean			
A	80				AWCPLC.ToClient.RapidMixer[0].INT[0].15	Boolean			
A	81		Setpoint	Rapid Mixer #1 - Speed SP	AWCPLC.ToClient.RapidMixer[0].REAL[0]	Real			
A	82		Status	Rapid Mixer #1 - Speed Feedback	AWCPLC.ToClient.RapidMixer[0].REAL[1]	Real			
A	83		Setpoint	Rapid Mixer #2 - Speed SP	AWCPLC.ToClient.RapidMixer[0].REAL[2]	Real			
A	84		Status	Rapid Mixer #2 - Speed Feedback	AWCPLC.ToClient.RapidMixer[0].REAL[3]	Real			
A	85		Status	Raw Water Inlet Valve Position	AWCPLC.ToClient.RapidMixer[0].REAL[4]	Real			
A	86		Status	Rapid Mixer Tank Level	AWCPLC.ToClient.RapidMixer[0].REAL[5]	Real			
A	87		Status	Raw Water Inlet Flow	AWCPLC.ToClient.RapidMixer[0].REAL[6]	Real			
A	88				AWCPLC.ToClient.RapidMixer[0].REAL[7]	Real			
A	89				AWCPLC.ToClient.RapidMixer[0].REAL[8]	Real			
A	90				AWCPLC.ToClient.RapidMixer[0].REAL[9]	Real			
A	91				AWCPLC.ToClient.RapidMixer[0].REAL[10]	Real			
A	92				AWCPLC.ToClient.RapidMixer[0].REAL[11]	Real			
A	93				AWCPLC.ToClient.RapidMixer[0].REAL[12]	Real			
A	94				AWCPLC.ToClient.RapidMixer[0].REAL[13]	Real			
A	95				AWCPLC.ToClient.RapidMixer[0].REAL[14]	Real			
A	96				AWCPLC.ToClient.RapidMixer[0].REAL[15]	Real			

AWC To Client PLC

R1v	No.	AWC					Client		
		Tag No.	Status / SP	Tag Description	AWC Produced Tag	Type	Tag No.	Tag Description	Notes
A	97		Setpoint	DAF Train #1 - Enabled SP	AWCPLC.ToClient.Train[1].INT[0].0	Boolean			
A	98		Status	DAF Train #1 - Out of Service	AWCPLC.ToClient.Train[1].INT[0].1	Boolean			
A	99		Status	DAF Train #1 - Ready	AWCPLC.ToClient.Train[1].INT[0].2	Boolean			
A	100		Status	DAF Train #1 - Running	AWCPLC.ToClient.Train[1].INT[0].3	Boolean			
A	101		Status	DAF Train #1 - In Process / Final Skim	AWCPLC.ToClient.Train[1].INT[0].4	Boolean			
A	102		Status	DAF Train #1 - Hot Standby	AWCPLC.ToClient.Train[1].INT[0].5	Boolean			
A	103		Status	DAF Train #1 - Saturator In Operation	AWCPLC.ToClient.Train[1].INT[0].6	Boolean			
A	104		Status	DAF Train #1 - Stage 1 Flocculation Mixer - In Auto	AWCPLC.ToClient.Train[1].INT[0].7	Boolean			
A	105		Status	DAF Train #1 - Stage 1 Flocculation Mixer - Running	AWCPLC.ToClient.Train[1].INT[0].8	Boolean			
A	106		Status	DAF Train #1 - Stage 1 Flocculation Mixer - Fault	AWCPLC.ToClient.Train[1].INT[0].9	Boolean			
A	107		Status	DAF Train #1 - Stage 2 Flocculation Mixer - In Auto	AWCPLC.ToClient.Train[1].INT[0].10	Boolean			
A	108		Status	DAF Train #1 - Stage 2 Flocculation Mixer - Running	AWCPLC.ToClient.Train[1].INT[0].11	Boolean			
A	109		Status	DAF Train #1 - Stage 2 Flocculation Mixer - Fault	AWCPLC.ToClient.Train[1].INT[0].12	Boolean			
A	110		Status	DAF Train #1 - Skimmer - In Auto	AWCPLC.ToClient.Train[1].INT[0].13	Boolean			
A	111		Status	DAF Train #1 - Skimmer - Running	AWCPLC.ToClient.Train[1].INT[0].14	Boolean			
A	112		Status	DAF Train #1 - Skimmer - Fault	AWCPLC.ToClient.Train[1].INT[0].15	Boolean			
A	113		Status	DAF Train #1 - Raw Water Inlet Valve - In Auto	AWCPLC.ToClient.Train[1].INT[1].0	Boolean			
A	114		Status	DAF Train #1 - Raw Water Inlet Valve - Opened	AWCPLC.ToClient.Train[1].INT[1].1	Boolean			
A	115		Status	DAF Train #1 - Raw Water Inlet Valve - Failed	AWCPLC.ToClient.Train[1].INT[1].2	Boolean			
A	116		Status	DAF Train #1 - Trough Spray Valve - In Auto	AWCPLC.ToClient.Train[1].INT[1].3	Boolean			
A	117		Status	DAF Train #1 - Trough Spray Valve - Opened	AWCPLC.ToClient.Train[1].INT[1].4	Boolean			
A	118				AWCPLC.ToClient.Train[1].INT[1].5	Boolean			
A	119				AWCPLC.ToClient.Train[1].INT[1].6	Boolean			
A	120				AWCPLC.ToClient.Train[1].INT[1].7	Boolean			
A	121				AWCPLC.ToClient.Train[1].INT[1].8	Boolean			
A	122				AWCPLC.ToClient.Train[1].INT[1].9	Boolean			
A	123				AWCPLC.ToClient.Train[1].INT[1].10	Boolean			
A	124				AWCPLC.ToClient.Train[1].INT[1].11	Boolean			
A	125				AWCPLC.ToClient.Train[1].INT[1].12	Boolean			
A	126				AWCPLC.ToClient.Train[1].INT[1].13	Boolean			
A	127				AWCPLC.ToClient.Train[1].INT[1].14	Boolean			
A	128				AWCPLC.ToClient.Train[1].INT[1].15	Boolean			
A	129		Status	DAF Train #1 Saturator - Recycle Pump - In Auto	AWCPLC.ToClient.Train[1].INT[2].0	Boolean			
A	130		Status	DAF Train #1 Saturator - Recycle Pump - Running	AWCPLC.ToClient.Train[1].INT[2].1	Boolean			
A	131		Status	DAF Train #1 Saturator - Recycle Pump - Fault	AWCPLC.ToClient.Train[1].INT[2].2	Boolean			
A	132		Status	DAF Train #1 Saturator - Compressed Air Solenoid Valve - In Auto	AWCPLC.ToClient.Train[1].INT[2].3	Boolean			
A	133		Status	DAF Train #1 Saturator - Compressed Air Solenoid Valve - Opened	AWCPLC.ToClient.Train[1].INT[2].4	Boolean			
A	134		Status	DAF Train #1 Saturator - Recycle Valve - In Auto	AWCPLC.ToClient.Train[1].INT[2].5	Boolean			
A	135		Status	DAF Train #1 Saturator - Recycle Valve - Opened	AWCPLC.ToClient.Train[1].INT[2].6	Boolean			
A	136		Status	DAF Train #1 Saturator - Recycle Valve - Fault	AWCPLC.ToClient.Train[1].INT[2].7	Boolean			
A	137				AWCPLC.ToClient.Train[1].INT[2].8	Boolean			
A	138				AWCPLC.ToClient.Train[1].INT[2].9	Boolean			
A	139				AWCPLC.ToClient.Train[1].INT[2].10	Boolean			
A	140				AWCPLC.ToClient.Train[1].INT[2].11	Boolean			
A	141				AWCPLC.ToClient.Train[1].INT[2].12	Boolean			
A	142				AWCPLC.ToClient.Train[1].INT[2].13	Boolean			
A	143				AWCPLC.ToClient.Train[1].INT[2].14	Boolean			
A	144				AWCPLC.ToClient.Train[1].INT[2].15	Boolean			
A	145		Setpoint	DAF Train #1 - Stage 1 Flocculation Mixer - Speed SP	AWCPLC.ToClient.Train[1].REAL[0]	Real			
A	146		Status	DAF Train #1 - Stage 1 Flocculation Mixer - Speed Feedback	AWCPLC.ToClient.Train[1].REAL[1]	Real			
A	147		Setpoint	DAF Train #1 - Stage 2 Flocculation Mixer - Speed SP	AWCPLC.ToClient.Train[1].REAL[2]	Real			
A	148		Status	DAF Train #1 - Stage 2 Flocculation Mixer - Speed Feedback	AWCPLC.ToClient.Train[1].REAL[3]	Real			
A	149		Setpoint	DAF Train #1 - Skimmer - Speed SP	AWCPLC.ToClient.Train[1].REAL[4]	Real			
A	150		Status	DAF Train #1 - Skimmer - Speed Feedback	AWCPLC.ToClient.Train[1].REAL[5]	Real			
A	151		Setpoint	DAF Train #1 - Skimmer - Off Time SP	AWCPLC.ToClient.Train[1].REAL[6]	Real			
A	152		Setpoint	DAF Train #1 - Skimmer - On Time SP	AWCPLC.ToClient.Train[1].REAL[7]	Real			
A	153		Setpoint	DAF Train #1 - Trough Spray Valve - Off Time SP	AWCPLC.ToClient.Train[1].REAL[8]	Real			
A	154		Setpoint	DAF Train #1 - Trough Spray Valve - On Time SP	AWCPLC.ToClient.Train[1].REAL[9]	Real			
A	155		Setpoint	DAF Train #1 - Saturation Stabilise Time SP	AWCPLC.ToClient.Train[1].REAL[10]	Real			
A	156		Setpoint	DAF Train #1 - Clarifier Stabilise Time SP	AWCPLC.ToClient.Train[1].REAL[11]	Real			
A	157		Setpoint	DAF Train #1 - Final Skim On Time SP	AWCPLC.ToClient.Train[1].REAL[12]	Real			
A	158		Setpoint	DAF Train #1 - Hot Standby Expiration Time SP	AWCPLC.ToClient.Train[1].REAL[13]	Real			
A	159		Setpoint	DAF Train #1 - Out-Of-Service - Drain Valves Opened Delay Time SP	AWCPLC.ToClient.Train[1].REAL[14]	Real			
A	160		Status	DAF Train #1 - Break Tank Level	AWCPLC.ToClient.Train[1].REAL[15]	Real			
A	161				AWCPLC.ToClient.Train[1].REAL[16]	Real			
A	162				AWCPLC.ToClient.Train[1].REAL[17]	Real			
A	163				AWCPLC.ToClient.Train[1].REAL[18]	Real			
A	164				AWCPLC.ToClient.Train[1].REAL[19]	Real			
A	165		Setpoint	DAF Train #1 Saturator - Recycle Pump - Speed SP	AWCPLC.ToClient.Train[1].REAL[20]	Real			
A	166		Status	DAF Train #1 Saturator - Recycle Pump - Speed Feedback	AWCPLC.ToClient.Train[1].REAL[21]	Real			
A	167		Setpoint	DAF Train #1 Saturator - Recycle Pump - Initial Speed on Starting SP	AWCPLC.ToClient.Train[1].REAL[22]	Real			
A	168		Setpoint	DAF Train #1 Saturator - Recycle Pump - Speed on Hi Level Recovery SP	AWCPLC.ToClient.Train[1].REAL[23]	Real			
A	169		Status	DAF Train #1 Saturator - Recycle Pump - Suction Pressure	AWCPLC.ToClient.Train[1].REAL[24]	Real			
A	170		Status	DAF Train #1 Saturator - Recycle Pump - Discharge Pressure	AWCPLC.ToClient.Train[1].REAL[25]	Real			
A	171		Status	DAF Train #1 Saturator - Recycle Flow	AWCPLC.ToClient.Train[1].REAL[26]	Real			
A	172		Status	DAF Train #1 Saturator - Tank Level	AWCPLC.ToClient.Train[1].REAL[27]	Real			
A	173		Setpoint	DAF Train #1 Saturator - Tank Level - Operating SP	AWCPLC.ToClient.Train[1].REAL[28]	Real			
A	174		Setpoint	DAF Train #1 Saturator - Shutdown / Drain Level SP	AWCPLC.ToClient.Train[1].REAL[29]	Real			
A	175		Setpoint	DAF Train #1 Saturator - Failed To Reach Level Time SP	AWCPLC.ToClient.Train[1].REAL[30]	Real			
A	176		Setpoint	DAF Train #1 Saturator - High Level Recovery Limit SP	AWCPLC.ToClient.Train[1].REAL[31]	Real			
A	177		Setpoint	DAF Train #1 Saturator - Low Level Recovery Limit SP	AWCPLC.ToClient.Train[1].REAL[32]	Real			
A	178		Setpoint	DAF Train #1 Saturator - Recycle Valve Position SP - High Level Recovery SP	AWCPLC.ToClient.Train[1].REAL[33]	Real			
A	179		Setpoint	DAF Train #1 Saturator - Recycle Valve Position SP - Low Level Recovery SP	AWCPLC.ToClient.Train[1].REAL[34]	Real			
A	180		Setpoint	DAF Train #1 Saturator - Open Recycle Valve - Interval Time SP	AWCPLC.ToClient.Train[1].REAL[35]	Real			
A	181		Setpoint	DAF Train #1 Saturator - Open Recycle Valve - Position Increment SP	AWCPLC.ToClient.Train[1].REAL[36]	Real			
A	182		Setpoint	DAF Train #1 Saturator - Close Recycle Valve - Interval Time SP	AWCPLC.ToClient.Train[1].REAL[37]	Real			
A	183		Setpoint	DAF Train #1 Saturator - Close Recycle Valve - Position Increment SP	AWCPLC.ToClient.Train[1].REAL[38]	Real			
A	184		Status	DAF Train #1 Saturator - Recycle Valve - Position Command	AWCPLC.ToClient.Train[1].REAL[39]	Real			
A	185				AWCPLC.ToClient.Train[1].REAL[40]	Real			

AWC To Client PLC

R1v	No.	AWC					Client		
		Tag No.	Status / SP	Tag Description	AWC Produced Tag	Type	Tag No.	Tag Description	Notes
A	186		Setpoint	DAF Train #2 - Enabled SP	AWCPLC.ToClient.Train[2].INT[0].0	Boolean			
A	187		Status	DAF Train #2 - Out of Service	AWCPLC.ToClient.Train[2].INT[0].1	Boolean			
A	188		Status	DAF Train #2 - Ready	AWCPLC.ToClient.Train[2].INT[0].2	Boolean			
A	189		Status	DAF Train #2 - Running	AWCPLC.ToClient.Train[2].INT[0].3	Boolean			
A	190		Status	DAF Train #2 - In Process / Final Skim	AWCPLC.ToClient.Train[2].INT[0].4	Boolean			
A	191		Status	DAF Train #2 - Hot Standby	AWCPLC.ToClient.Train[2].INT[0].5	Boolean			
A	192		Status	DAF Train #2 - Saturator In Operation	AWCPLC.ToClient.Train[2].INT[0].6	Boolean			
A	193		Status	DAF Train #2 - Stage 1 Flocculation Mixer - In Auto	AWCPLC.ToClient.Train[2].INT[0].7	Boolean			
A	194		Status	DAF Train #2 - Stage 1 Flocculation Mixer - Running	AWCPLC.ToClient.Train[2].INT[0].8	Boolean			
A	195		Status	DAF Train #2 - Stage 1 Flocculation Mixer - Fault	AWCPLC.ToClient.Train[2].INT[0].9	Boolean			
A	196		Status	DAF Train #2 - Stage 2 Flocculation Mixer - In Auto	AWCPLC.ToClient.Train[2].INT[0].10	Boolean			
A	197		Status	DAF Train #2 - Stage 2 Flocculation Mixer - Running	AWCPLC.ToClient.Train[2].INT[0].11	Boolean			
A	198		Status	DAF Train #2 - Stage 2 Flocculation Mixer - Fault	AWCPLC.ToClient.Train[2].INT[0].12	Boolean			
A	199		Status	DAF Train #2 - Skimmer - In Auto	AWCPLC.ToClient.Train[2].INT[0].13	Boolean			
A	200		Status	DAF Train #2 - Skimmer - Running	AWCPLC.ToClient.Train[2].INT[0].14	Boolean			
A	201		Status	DAF Train #2 - Skimmer - Fault	AWCPLC.ToClient.Train[2].INT[0].15	Boolean			
A	202		Status	DAF Train #2 - Raw Water Inlet Valve - In Auto	AWCPLC.ToClient.Train[2].INT[1].0	Boolean			
A	203		Status	DAF Train #2 - Raw Water Inlet Valve - Opened	AWCPLC.ToClient.Train[2].INT[1].1	Boolean			
A	204		Status	DAF Train #2 - Raw Water Inlet Valve - Failed	AWCPLC.ToClient.Train[2].INT[1].2	Boolean			
A	205		Status	DAF Train #2 - Trough Spray Valve - In Auto	AWCPLC.ToClient.Train[2].INT[1].3	Boolean			
A	206		Status	DAF Train #2 - Trough Spray Valve - Opened	AWCPLC.ToClient.Train[2].INT[1].4	Boolean			
A	207				AWCPLC.ToClient.Train[2].INT[1].5	Boolean			
A	208				AWCPLC.ToClient.Train[2].INT[1].6	Boolean			
A	209				AWCPLC.ToClient.Train[2].INT[1].7	Boolean			
A	210				AWCPLC.ToClient.Train[2].INT[1].8	Boolean			
A	211				AWCPLC.ToClient.Train[2].INT[1].9	Boolean			
A	212				AWCPLC.ToClient.Train[2].INT[1].10	Boolean			
A	213				AWCPLC.ToClient.Train[2].INT[1].11	Boolean			
A	214				AWCPLC.ToClient.Train[2].INT[1].12	Boolean			
A	215				AWCPLC.ToClient.Train[2].INT[1].13	Boolean			
A	216				AWCPLC.ToClient.Train[2].INT[1].14	Boolean			
A	217				AWCPLC.ToClient.Train[2].INT[1].15	Boolean			
A	218		Status	DAF Train #2 Saturator - Recycle Pump - In Auto	AWCPLC.ToClient.Train[2].INT[2].0	Boolean			
A	219		Status	DAF Train #2 Saturator - Recycle Pump - Running	AWCPLC.ToClient.Train[2].INT[2].1	Boolean			
A	220		Status	DAF Train #2 Saturator - Recycle Pump - Fault	AWCPLC.ToClient.Train[2].INT[2].2	Boolean			
A	221		Status	DAF Train #2 Saturator - Compressed Air Solenoid Valve - In Auto	AWCPLC.ToClient.Train[2].INT[2].3	Boolean			
A	222		Status	DAF Train #2 Saturator - Compressed Air Solenoid Valve - Opened	AWCPLC.ToClient.Train[2].INT[2].4	Boolean			
A	223		Status	DAF Train #2 Saturator - Recycle Valve - In Auto	AWCPLC.ToClient.Train[2].INT[2].5	Boolean			
A	224		Status	DAF Train #2 Saturator - Recycle Valve - Opened	AWCPLC.ToClient.Train[2].INT[2].6	Boolean			
A	225		Status	DAF Train #2 Saturator - Recycle Valve - Fault	AWCPLC.ToClient.Train[2].INT[2].7	Boolean			
A	226				AWCPLC.ToClient.Train[2].INT[2].8	Boolean			
A	227				AWCPLC.ToClient.Train[2].INT[2].9	Boolean			
A	228				AWCPLC.ToClient.Train[2].INT[2].10	Boolean			
A	229				AWCPLC.ToClient.Train[2].INT[2].11	Boolean			
A	230				AWCPLC.ToClient.Train[2].INT[2].12	Boolean			
A	231				AWCPLC.ToClient.Train[2].INT[2].13	Boolean			
A	232				AWCPLC.ToClient.Train[2].INT[2].14	Boolean			
A	233				AWCPLC.ToClient.Train[2].INT[2].15	Boolean			
A	234		Setpoint	DAF Train #2 - Stage 1 Flocculation Mixer - Speed SP	AWCPLC.ToClient.Train[2].REAL[0]	Real			
A	235		Status	DAF Train #2 - Stage 1 Flocculation Mixer - Speed Feedback	AWCPLC.ToClient.Train[2].REAL[1]	Real			
A	236		Setpoint	DAF Train #2 - Stage 2 Flocculation Mixer - Speed SP	AWCPLC.ToClient.Train[2].REAL[2]	Real			
A	237		Status	DAF Train #2 - Stage 2 Flocculation Mixer - Speed Feedback	AWCPLC.ToClient.Train[2].REAL[3]	Real			
A	238		Setpoint	DAF Train #2 - Skimmer - Speed SP	AWCPLC.ToClient.Train[2].REAL[4]	Real			
A	239		Status	DAF Train #2 - Skimmer - Speed Feedback	AWCPLC.ToClient.Train[2].REAL[5]	Real			
A	240		Setpoint	DAF Train #2 - Skimmer - Off Time SP	AWCPLC.ToClient.Train[2].REAL[6]	Real			
A	241		Setpoint	DAF Train #2 - Skimmer - On Time SP	AWCPLC.ToClient.Train[2].REAL[7]	Real			
A	242		Setpoint	DAF Train #2 - Trough Spray Valve - Off Time SP	AWCPLC.ToClient.Train[2].REAL[8]	Real			
A	243		Setpoint	DAF Train #2 - Trough Spray Valve - On Time SP	AWCPLC.ToClient.Train[2].REAL[9]	Real			
A	244		Setpoint	DAF Train #2 - Saturation Stabilise Time SP	AWCPLC.ToClient.Train[2].REAL[10]	Real			
A	245		Setpoint	DAF Train #2 - Clarifier Stabilise Time SP	AWCPLC.ToClient.Train[2].REAL[11]	Real			
A	246		Setpoint	DAF Train #2 - Final Skim On Time SP	AWCPLC.ToClient.Train[2].REAL[12]	Real			
A	247		Setpoint	DAF Train #2 - Hot Standby Expiration Time SP	AWCPLC.ToClient.Train[2].REAL[13]	Real			
A	248		Setpoint	DAF Train #2 - Out-Of-Service - Drain Valves Opened Delay Time SP	AWCPLC.ToClient.Train[2].REAL[14]	Real			
A	249		Status	DAF Train #2 - Break Tank Level	AWCPLC.ToClient.Train[2].REAL[15]	Real			
A	250				AWCPLC.ToClient.Train[2].REAL[16]	Real			
A	251				AWCPLC.ToClient.Train[2].REAL[17]	Real			
A	252				AWCPLC.ToClient.Train[2].REAL[18]	Real			
A	253				AWCPLC.ToClient.Train[2].REAL[19]	Real			
A	254		Setpoint	DAF Train #2 Saturator - Recycle Pump - Speed SP	AWCPLC.ToClient.Train[2].REAL[20]	Real			
A	255		Status	DAF Train #2 Saturator - Recycle Pump - Speed Feedback	AWCPLC.ToClient.Train[2].REAL[21]	Real			
A	256		Setpoint	DAF Train #2 Saturator - Recycle Pump - Initial Speed on Starting SP	AWCPLC.ToClient.Train[2].REAL[22]	Real			
A	257		Setpoint	DAF Train #2 Saturator - Recycle Pump - Speed on Hi Level Recovery SP	AWCPLC.ToClient.Train[2].REAL[23]	Real			
A	258		Status	DAF Train #2 Saturator - Recycle Pump - Suction Pressure	AWCPLC.ToClient.Train[2].REAL[24]	Real			
A	259		Status	DAF Train #2 Saturator - Recycle Pump - Discharge Pressure	AWCPLC.ToClient.Train[2].REAL[25]	Real			
A	260		Status	DAF Train #2 Saturator - Recycle Flow	AWCPLC.ToClient.Train[2].REAL[26]	Real			
A	261		Status	DAF Train #2 Saturator - Tank Level	AWCPLC.ToClient.Train[2].REAL[27]	Real			
A	262		Setpoint	DAF Train #2 Saturator - Tank Level - Operating SP	AWCPLC.ToClient.Train[2].REAL[28]	Real			
A	263		Setpoint	DAF Train #2 Saturator - Shutdown / Drain Level SP	AWCPLC.ToClient.Train[2].REAL[29]	Real			
A	264		Setpoint	DAF Train #2 Saturator - Failed To Reach Level Time SP	AWCPLC.ToClient.Train[2].REAL[30]	Real			
A	265		Setpoint	DAF Train #2 Saturator - High Level Recovery Limit SP	AWCPLC.ToClient.Train[2].REAL[31]	Real			
A	266		Setpoint	DAF Train #2 Saturator - Low Level Recovery Limit SP	AWCPLC.ToClient.Train[2].REAL[32]	Real			
A	267		Setpoint	DAF Train #2 Saturator - Recycle Valve Position SP - High Level Recovery SP	AWCPLC.ToClient.Train[2].REAL[33]	Real			
A	268		Setpoint	DAF Train #2 Saturator - Recycle Valve Position SP - Low Level Recovery SP	AWCPLC.ToClient.Train[2].REAL[34]	Real			
A	269		Setpoint	DAF Train #2 Saturator - Open Recycle Valve - Interval Time SP	AWCPLC.ToClient.Train[2].REAL[35]	Real			
A	270		Setpoint	DAF Train #2 Saturator - Open Recycle Valve - Position Increment SP	AWCPLC.ToClient.Train[2].REAL[36]	Real			
A	271		Setpoint	DAF Train #2 Saturator - Close Recycle Valve - Interval Time SP	AWCPLC.ToClient.Train[2].REAL[37]	Real			
A	272		Setpoint	DAF Train #2 Saturator - Close Recycle Valve - Position Increment SP	AWCPLC.ToClient.Train[2].REAL[38]	Real			
A	273		Status	DAF Train #2 Saturator - Recycle Valve - Position Command	AWCPLC.ToClient.Train[2].REAL[39]	Real			
A	274				AWCPLC.ToClient.Train[2].REAL[40]	Real			

AWC To Client PLC

R1v	No.	AWC					Client		
		Tag No.	Status / SP	Tag Description	AWC Produced Tag	Type	Tag No.	Tag Description	Notes
A	275		Setpoint	DAF Train #3 - Enabled SP	AWCPLC.ToClient.Train[3].INT[0].0	Boolean			
A	276		Status	DAF Train #3 - Out of Service	AWCPLC.ToClient.Train[3].INT[0].1	Boolean			
A	277		Status	DAF Train #3 - Ready	AWCPLC.ToClient.Train[3].INT[0].2	Boolean			
A	278		Status	DAF Train #3 - Running	AWCPLC.ToClient.Train[3].INT[0].3	Boolean			
A	279		Status	DAF Train #3 - In Process / Final Skim	AWCPLC.ToClient.Train[3].INT[0].4	Boolean			
A	280		Status	DAF Train #3 - Hot Standby	AWCPLC.ToClient.Train[3].INT[0].5	Boolean			
A	281		Status	DAF Train #3 - Saturator In Operation	AWCPLC.ToClient.Train[3].INT[0].6	Boolean			
A	282		Status	DAF Train #3 - Stage 1 Flocculation Mixer - In Auto	AWCPLC.ToClient.Train[3].INT[0].7	Boolean			
A	283		Status	DAF Train #3 - Stage 1 Flocculation Mixer - Running	AWCPLC.ToClient.Train[3].INT[0].8	Boolean			
A	284		Status	DAF Train #3 - Stage 1 Flocculation Mixer - Fault	AWCPLC.ToClient.Train[3].INT[0].9	Boolean			
A	285		Status	DAF Train #3 - Stage 2 Flocculation Mixer - In Auto	AWCPLC.ToClient.Train[3].INT[0].10	Boolean			
A	286		Status	DAF Train #3 - Stage 2 Flocculation Mixer - Running	AWCPLC.ToClient.Train[3].INT[0].11	Boolean			
A	287		Status	DAF Train #3 - Stage 2 Flocculation Mixer - Fault	AWCPLC.ToClient.Train[3].INT[0].12	Boolean			
A	288		Status	DAF Train #3 - Skimmer - In Auto	AWCPLC.ToClient.Train[3].INT[0].13	Boolean			
A	289		Status	DAF Train #3 - Skimmer - Running	AWCPLC.ToClient.Train[3].INT[0].14	Boolean			
A	290		Status	DAF Train #3 - Skimmer - Fault	AWCPLC.ToClient.Train[3].INT[0].15	Boolean			
A	291		Status	DAF Train #3 - Raw Water Inlet Valve - In Auto	AWCPLC.ToClient.Train[3].INT[1].0	Boolean			
A	292		Status	DAF Train #3 - Raw Water Inlet Valve - Opened	AWCPLC.ToClient.Train[3].INT[1].1	Boolean			
A	293		Status	DAF Train #3 - Raw Water Inlet Valve - Failed	AWCPLC.ToClient.Train[3].INT[1].2	Boolean			
A	294		Status	DAF Train #3 - Trough Spray Valve - In Auto	AWCPLC.ToClient.Train[3].INT[1].3	Boolean			
A	295		Status	DAF Train #3 - Trough Spray Valve - Opened	AWCPLC.ToClient.Train[3].INT[1].4	Boolean			
A	296				AWCPLC.ToClient.Train[3].INT[1].5	Boolean			
A	297				AWCPLC.ToClient.Train[3].INT[1].6	Boolean			
A	298				AWCPLC.ToClient.Train[3].INT[1].7	Boolean			
A	299				AWCPLC.ToClient.Train[3].INT[1].8	Boolean			
A	300				AWCPLC.ToClient.Train[3].INT[1].9	Boolean			
A	301				AWCPLC.ToClient.Train[3].INT[1].10	Boolean			
A	302				AWCPLC.ToClient.Train[3].INT[1].11	Boolean			
A	303				AWCPLC.ToClient.Train[3].INT[1].12	Boolean			
A	304				AWCPLC.ToClient.Train[3].INT[1].13	Boolean			
A	305				AWCPLC.ToClient.Train[3].INT[1].14	Boolean			
A	306				AWCPLC.ToClient.Train[3].INT[1].15	Boolean			
A	307		Status	DAF Train #3 Saturator - Recycle Pump - In Auto	AWCPLC.ToClient.Train[3].INT[2].0	Boolean			
A	308		Status	DAF Train #3 Saturator - Recycle Pump - Running	AWCPLC.ToClient.Train[3].INT[2].1	Boolean			
A	309		Status	DAF Train #3 Saturator - Recycle Pump - Fault	AWCPLC.ToClient.Train[3].INT[2].2	Boolean			
A	310		Status	DAF Train #3 Saturator - Compressed Air Solenoid Valve - In Auto	AWCPLC.ToClient.Train[3].INT[2].3	Boolean			
A	311		Status	DAF Train #3 Saturator - Compressed Air Solenoid Valve - Opened	AWCPLC.ToClient.Train[3].INT[2].4	Boolean			
A	312		Status	DAF Train #3 Saturator - Recycle Valve - In Auto	AWCPLC.ToClient.Train[3].INT[2].5	Boolean			
A	313		Status	DAF Train #3 Saturator - Recycle Valve - Opened	AWCPLC.ToClient.Train[3].INT[2].6	Boolean			
A	314		Status	DAF Train #3 Saturator - Recycle Valve - Fault	AWCPLC.ToClient.Train[3].INT[2].7	Boolean			
A	315				AWCPLC.ToClient.Train[3].INT[2].8	Boolean			
A	316				AWCPLC.ToClient.Train[3].INT[2].9	Boolean			
A	317				AWCPLC.ToClient.Train[3].INT[2].10	Boolean			
A	318				AWCPLC.ToClient.Train[3].INT[2].11	Boolean			
A	319				AWCPLC.ToClient.Train[3].INT[2].12	Boolean			
A	320				AWCPLC.ToClient.Train[3].INT[2].13	Boolean			
A	321				AWCPLC.ToClient.Train[3].INT[2].14	Boolean			
A	322				AWCPLC.ToClient.Train[3].INT[2].15	Boolean			
A	323		Setpoint	DAF Train #3 - Stage 1 Flocculation Mixer - Speed SP	AWCPLC.ToClient.Train[3].REAL[0]	Real			
A	324		Status	DAF Train #3 - Stage 1 Flocculation Mixer - Speed Feedback	AWCPLC.ToClient.Train[3].REAL[1]	Real			
A	325		Setpoint	DAF Train #3 - Stage 2 Flocculation Mixer - Speed SP	AWCPLC.ToClient.Train[3].REAL[2]	Real			
A	326		Status	DAF Train #3 - Stage 2 Flocculation Mixer - Speed Feedback	AWCPLC.ToClient.Train[3].REAL[3]	Real			
A	327		Setpoint	DAF Train #3 - Skimmer - Speed SP	AWCPLC.ToClient.Train[3].REAL[4]	Real			
A	328		Status	DAF Train #3 - Skimmer - Speed Feedback	AWCPLC.ToClient.Train[3].REAL[5]	Real			
A	329		Setpoint	DAF Train #3 - Skimmer - Off Time SP	AWCPLC.ToClient.Train[3].REAL[6]	Real			
A	330		Setpoint	DAF Train #3 - Skimmer - On Time SP	AWCPLC.ToClient.Train[3].REAL[7]	Real			
A	331		Setpoint	DAF Train #3 - Trough Spray Valve - Off Time SP	AWCPLC.ToClient.Train[3].REAL[8]	Real			
A	332		Setpoint	DAF Train #3 - Trough Spray Valve - On Time SP	AWCPLC.ToClient.Train[3].REAL[9]	Real			
A	333		Setpoint	DAF Train #3 - Saturation Stabilise Time SP	AWCPLC.ToClient.Train[3].REAL[10]	Real			
A	334		Setpoint	DAF Train #3 - Clarifier Stabilise Time SP	AWCPLC.ToClient.Train[3].REAL[11]	Real			
A	335		Setpoint	DAF Train #3 - Final Skim On Time SP	AWCPLC.ToClient.Train[3].REAL[12]	Real			
A	336		Setpoint	DAF Train #3 - Hot Standby Expiration Time SP	AWCPLC.ToClient.Train[3].REAL[13]	Real			
A	337		Setpoint	DAF Train #3 - Out-Of-Service - Drain Valves Opened Delay Time SP	AWCPLC.ToClient.Train[3].REAL[14]	Real			
A	338		Status	DAF Train #3 - Break Tank Level	AWCPLC.ToClient.Train[3].REAL[15]	Real			
A	339				AWCPLC.ToClient.Train[3].REAL[16]	Real			
A	340				AWCPLC.ToClient.Train[3].REAL[17]	Real			
A	341				AWCPLC.ToClient.Train[3].REAL[18]	Real			
A	342				AWCPLC.ToClient.Train[3].REAL[19]	Real			
A	343		Setpoint	DAF Train #3 Saturator - Recycle Pump - Speed SP	AWCPLC.ToClient.Train[3].REAL[20]	Real			
A	344		Status	DAF Train #3 Saturator - Recycle Pump - Speed Feedback	AWCPLC.ToClient.Train[3].REAL[21]	Real			
A	345		Setpoint	DAF Train #3 Saturator - Recycle Pump - Initial Speed on Starting SP	AWCPLC.ToClient.Train[3].REAL[22]	Real			
A	346		Setpoint	DAF Train #3 Saturator - Recycle Pump - Speed on Hi Level Recovery SP	AWCPLC.ToClient.Train[3].REAL[23]	Real			
A	347		Status	DAF Train #3 Saturator - Recycle Pump - Suction Pressure	AWCPLC.ToClient.Train[3].REAL[24]	Real			
A	348		Status	DAF Train #3 Saturator - Recycle Pump - Discharge Pressure	AWCPLC.ToClient.Train[3].REAL[25]	Real			
A	349		Status	DAF Train #3 Saturator - Recycle Flow	AWCPLC.ToClient.Train[3].REAL[26]	Real			
A	350		Status	DAF Train #3 Saturator - Tank Level	AWCPLC.ToClient.Train[3].REAL[27]	Real			
A	351		Setpoint	DAF Train #3 Saturator - Tank Level - Operating SP	AWCPLC.ToClient.Train[3].REAL[28]	Real			
A	352		Setpoint	DAF Train #3 Saturator - Shutdown / Drain Level SP	AWCPLC.ToClient.Train[3].REAL[29]	Real			
A	353		Setpoint	DAF Train #3 Saturator - Failed To Reach Level Time SP	AWCPLC.ToClient.Train[3].REAL[30]	Real			
A	354		Setpoint	DAF Train #3 Saturator - High Level Recovery Limit SP	AWCPLC.ToClient.Train[3].REAL[31]	Real			
A	355		Setpoint	DAF Train #3 Saturator - Low Level Recovery Limit SP	AWCPLC.ToClient.Train[3].REAL[32]	Real			
A	356		Setpoint	DAF Train #3 Saturator - Recycle Valve Position SP - High Level Recovery SP	AWCPLC.ToClient.Train[3].REAL[33]	Real			
A	357		Setpoint	DAF Train #3 Saturator - Recycle Valve Position SP - Low Level Recovery SP	AWCPLC.ToClient.Train[3].REAL[34]	Real			
A	358		Setpoint	DAF Train #3 Saturator - Open Recycle Valve - Interval Time SP	AWCPLC.ToClient.Train[3].REAL[35]	Real			
A	359		Setpoint	DAF Train #3 Saturator - Open Recycle Valve - Position Increment SP	AWCPLC.ToClient.Train[3].REAL[36]	Real			
A	360		Setpoint	DAF Train #3 Saturator - Close Recycle Valve - Interval Time SP	AWCPLC.ToClient.Train[3].REAL[37]	Real			
A	361		Setpoint	DAF Train #3 Saturator - Close Recycle Valve - Position Increment SP	AWCPLC.ToClient.Train[3].REAL[38]	Real			
A	362		Status	DAF Train #3 Saturator - Recycle Valve - Position Command	AWCPLC.ToClient.Train[3].REAL[39]	Real			
A	363				AWCPLC.ToClient.Train[3].REAL[40]	Real			

AWC To Client PLC

R1v	No.	AWC					Client		
		Tag No.	Status / SP	Tag Description	AWC Produced Tag	Type	Tag No.	Tag Description	Notes
A	364		Status	FILTER #1 - Interlock	AWCPLC.ToClient.Filter[1].INT[0].0	Boolean			
A	365		Status	FILTER #1 - Not In Operation	AWCPLC.ToClient.Filter[1].INT[0].1	Boolean			
A	366		Status	FILTER #1 - Pre-Rinse Mode	AWCPLC.ToClient.Filter[1].INT[0].2	Boolean			
A	367		Status		AWCPLC.ToClient.Filter[1].INT[0].3	Boolean			
A	368		Status	FILTER #1 - Running / Filtering Mode	AWCPLC.ToClient.Filter[1].INT[0].4	Boolean			
A	369		Status	FILTER #1 - Backwash Standby	AWCPLC.ToClient.Filter[1].INT[0].5	Boolean			
A	370		Status	FILTER #1 - Backwash Mode Active	AWCPLC.ToClient.Filter[1].INT[0].6	Boolean			
A	371		Status	FILTER #1 - Backwash Mode - Draining	AWCPLC.ToClient.Filter[1].INT[0].7	Boolean			
A	372		Command	FILTER #1 - Backwash Mode - Start Air Blower	AWCPLC.ToClient.Filter[1].INT[0].8	Boolean			
A	373		Command	FILTER #1 - Backwash Mode - Backwash Pumps Run Request	AWCPLC.ToClient.Filter[1].INT[0].9	Boolean			
A	374		Status	FILTER #1 - Backwash Mode - Low Flow	AWCPLC.ToClient.Filter[1].INT[0].10	Boolean			
A	375		Status	FILTER #1 - Backwash Mode - High Flow	AWCPLC.ToClient.Filter[1].INT[0].11	Boolean			
A	376		Status	FILTER #1 - Backwash Mode - Settle / Rinse	AWCPLC.ToClient.Filter[1].INT[0].12	Boolean			
A	377		Setpoint	FILTER #1 - Backwash Mode - Time Enabled SP	AWCPLC.ToClient.Filter[1].INT[0].13	Boolean			
A	378		Setpoint	FILTER #1 - Backwash Mode - Loss of Head Enabled SP	AWCPLC.ToClient.Filter[1].INT[0].14	Boolean			
A	379		Setpoint	FILTER #1 - Backwash Mode - Turbidity Enabled SP	AWCPLC.ToClient.Filter[1].INT[0].15	Boolean			
A	380		Setpoint	FILTER #1 - Backwash Mode - Manual Enabled SP	AWCPLC.ToClient.Filter[1].INT[1].0	Boolean			
A	381		Setpoint	FILTER #1 - Diverting To Waste Enabled SP	AWCPLC.ToClient.Filter[1].INT[1].1	Boolean			
A	382		Status	FILTER #1 - Inlet Valve - In Auto	AWCPLC.ToClient.Filter[1].INT[1].2	Boolean			
A	383		Status	FILTER #1 - Inlet Valve - Opened	AWCPLC.ToClient.Filter[1].INT[1].3	Boolean			
A	384		Status	FILTER #1 - Inlet Valve - Fault	AWCPLC.ToClient.Filter[1].INT[1].4	Boolean			
A	385		Status	FILTER #1 - Effluent to Clearwell Valve - In Auto	AWCPLC.ToClient.Filter[1].INT[1].5	Boolean			
A	386		Status	FILTER #1 - Effluent to Clearwell Valve - Opened	AWCPLC.ToClient.Filter[1].INT[1].6	Boolean			
A	387		Status	FILTER #1 - Effluent to Clearwell Valve - Fault	AWCPLC.ToClient.Filter[1].INT[1].7	Boolean			
A	388		Status	FILTER #1 - Turbidity Sample Solenoid Valve - In Auto	AWCPLC.ToClient.Filter[1].INT[1].8	Boolean			
A	389		Status	FILTER #1 - Turbidity Sample Solenoid Valve - Open Command	AWCPLC.ToClient.Filter[1].INT[1].9	Boolean			
A	390		Status	FILTER #1 - Rinse To Waste Valve - In Auto	AWCPLC.ToClient.Filter[1].INT[1].10	Boolean			
A	391		Status	FILTER #1 - Rinse To Waste Valve - Opened	AWCPLC.ToClient.Filter[1].INT[1].11	Boolean			
A	392		Status	FILTER #1 - Rinse To Waste Valve - Fault	AWCPLC.ToClient.Filter[1].INT[1].12	Boolean			
A	393		Status	FILTER #1 - Backwash Supply Valve - In Auto	AWCPLC.ToClient.Filter[1].INT[1].13	Boolean			
A	394		Status	FILTER #1 - Backwash Supply Valve - Opened	AWCPLC.ToClient.Filter[1].INT[1].14	Boolean			
A	395		Status	FILTER #1 - Backwash Supply Valve - Fault	AWCPLC.ToClient.Filter[1].INT[1].15	Boolean			
A	396		Status	FILTER #1 - Air Scour Valve - In Auto	AWCPLC.ToClient.Filter[1].INT[2].0	Boolean			
A	397		Status	FILTER #1 - Air Scour Valve - Opened	AWCPLC.ToClient.Filter[1].INT[2].1	Boolean			
A	398		Status	FILTER #1 - Air Scour Valve - Fault	AWCPLC.ToClient.Filter[1].INT[2].2	Boolean			
A	399				AWCPLC.ToClient.Filter[1].INT[2].3	Boolean			
A	400				AWCPLC.ToClient.Filter[1].INT[2].4	Boolean			
A	401				AWCPLC.ToClient.Filter[1].INT[2].5	Boolean			
A	402				AWCPLC.ToClient.Filter[1].INT[2].6	Boolean			
A	403				AWCPLC.ToClient.Filter[1].INT[2].7	Boolean			
A	404				AWCPLC.ToClient.Filter[1].INT[2].8	Boolean			
A	405				AWCPLC.ToClient.Filter[1].INT[2].9	Boolean			
A	406				AWCPLC.ToClient.Filter[1].INT[2].10	Boolean			
A	407				AWCPLC.ToClient.Filter[1].INT[2].11	Boolean			
A	408				AWCPLC.ToClient.Filter[1].INT[2].12	Boolean			
A	409				AWCPLC.ToClient.Filter[1].INT[2].13	Boolean			
A	410				AWCPLC.ToClient.Filter[1].INT[2].14	Boolean			
A	411				AWCPLC.ToClient.Filter[1].INT[2].15	Boolean			
A	412		Status	FILTER #1 - Level	AWCPLC.ToClient.Filter[1].REAL[0]	Real			
A	413		Status	FILTER #1 - Pressure	AWCPLC.ToClient.Filter[1].REAL[1]	Real			
A	414		Status	FILTER #1 - Turbidity	AWCPLC.ToClient.Filter[1].REAL[2]	Real			
A	415		Setpoint	FILTER #1 - Pre-Rinse Turbidity SP	AWCPLC.ToClient.Filter[1].REAL[3]	Real			
A	416		Setpoint	FILTER #1 - Pre-Rinse Turbidity Lo Time SP	AWCPLC.ToClient.Filter[1].REAL[4]	Real			
A	417		Setpoint	FILTER #1 - Pre-Rinse Turbidity Hi Time SP	AWCPLC.ToClient.Filter[1].REAL[5]	Real			
A	418		Setpoint	FILTER #1 - Operating Level SP	AWCPLC.ToClient.Filter[1].REAL[6]	Real			
A	419		Setpoint	FILTER #1 - Backwash Mode - Time SP	AWCPLC.ToClient.Filter[1].REAL[7]	Real			
A	420		Setpoint	FILTER #1 - Backwash Mode - Loss of Head SP	AWCPLC.ToClient.Filter[1].REAL[8]	Real			
A	421		Setpoint	FILTER #1 - Backwash Mode - Turbidity SP	AWCPLC.ToClient.Filter[1].REAL[9]	Real			
A	422		Setpoint	FILTER #1 - Backwash Mode - Drain SP	AWCPLC.ToClient.Filter[1].REAL[10]	Real			
A	423		Setpoint	FILTER #1 - Backwash Mode - Air Scour Time SP	AWCPLC.ToClient.Filter[1].REAL[11]	Real			
A	424		Setpoint	FILTER #1 - Backwash Mode - Air Scour Lo Flow Time SP	AWCPLC.ToClient.Filter[1].REAL[12]	Real			
A	425		Setpoint	FILTER #1 - Backwash Mode - Low Flow Time SP	AWCPLC.ToClient.Filter[1].REAL[13]	Real			
A	426		Setpoint	FILTER #1 - Backwash Mode - High Flow Time SP	AWCPLC.ToClient.Filter[1].REAL[14]	Real			
A	427		Setpoint	FILTER #1 - Backwash Mode - Settle Time SP	AWCPLC.ToClient.Filter[1].REAL[15]	Real			
A	428		Setpoint	FILTER #1 - Backwash Mode - Rinse Time SP	AWCPLC.ToClient.Filter[1].REAL[16]	Real			
A	429		Status	FILTER #1 - Effluent to Clearwell Valve Position	AWCPLC.ToClient.Filter[1].REAL[17]	Real			
A	430		Status	FILTER #1 - Rinse To Waste Valve Position	AWCPLC.ToClient.Filter[1].REAL[18]	Real			
A	431				AWCPLC.ToClient.Filter[1].REAL[19]	Real			
A	432				AWCPLC.ToClient.Filter[1].REAL[20]	Real			

AWC To Client PLC

R1v	No.	AWC					Client		
		Tag No.	Status / SP	Tag Description	AWC Produced Tag	Type	Tag No.	Tag Description	Notes
A	433		Status	FILTER #2 - Interlock	AWCPLC.ToClient.Filter[2].INT[0].0	Boolean			
A	434		Status	FILTER #2 - Not In Operation	AWCPLC.ToClient.Filter[2].INT[0].1	Boolean			
A	435		Status	FILTER #2 - Pre-Rinse Mode	AWCPLC.ToClient.Filter[2].INT[0].2	Boolean			
A	436		Status		AWCPLC.ToClient.Filter[2].INT[0].3	Boolean			
A	437		Status	FILTER #2 - Running / Filtering Mode	AWCPLC.ToClient.Filter[2].INT[0].4	Boolean			
A	438		Status	FILTER #2 - Backwash Standby	AWCPLC.ToClient.Filter[2].INT[0].5	Boolean			
A	439		Status	FILTER #2 - Backwash Mode Active	AWCPLC.ToClient.Filter[2].INT[0].6	Boolean			
A	440		Status	FILTER #2 - Backwash Mode - Draining	AWCPLC.ToClient.Filter[2].INT[0].7	Boolean			
A	441		Command	FILTER #2 - Backwash Mode - Start Air Blower	AWCPLC.ToClient.Filter[2].INT[0].8	Boolean			
A	442		Command	FILTER #2 - Backwash Mode - Backwash Pumps Run Request	AWCPLC.ToClient.Filter[2].INT[0].9	Boolean			
A	443		Status	FILTER #2 - Backwash Mode - Low Flow	AWCPLC.ToClient.Filter[2].INT[0].10	Boolean			
A	444		Status	FILTER #2 - Backwash Mode - High Flow	AWCPLC.ToClient.Filter[2].INT[0].11	Boolean			
A	445		Status	FILTER #2 - Backwash Mode - Settle / Rinse	AWCPLC.ToClient.Filter[2].INT[0].12	Boolean			
A	446		Setpoint	FILTER #2 - Backwash Mode - Time Enabled SP	AWCPLC.ToClient.Filter[2].INT[0].13	Boolean			
A	447		Setpoint	FILTER #2 - Backwash Mode - Loss of Head Enabled SP	AWCPLC.ToClient.Filter[2].INT[0].14	Boolean			
A	448		Setpoint	FILTER #2 - Backwash Mode - Turbidity Enabled SP	AWCPLC.ToClient.Filter[2].INT[0].15	Boolean			
A	449		Setpoint	FILTER #2 - Backwash Mode - Manual Enabled SP	AWCPLC.ToClient.Filter[2].INT[1].0	Boolean			
A	450		Setpoint	FILTER #2 - Diverting To Waste Enabled SP	AWCPLC.ToClient.Filter[2].INT[1].1	Boolean			
A	451		Status	FILTER #2 - Inlet Valve - In Auto	AWCPLC.ToClient.Filter[2].INT[1].2	Boolean			
A	452		Status	FILTER #2 - Inlet Valve - Opened	AWCPLC.ToClient.Filter[2].INT[1].3	Boolean			
A	453		Status	FILTER #2 - Inlet Valve - Fault	AWCPLC.ToClient.Filter[2].INT[1].4	Boolean			
A	454		Status	FILTER #2 - Effluent to Clearwell Valve - In Auto	AWCPLC.ToClient.Filter[2].INT[1].5	Boolean			
A	455		Status	FILTER #2 - Effluent to Clearwell Valve - Opened	AWCPLC.ToClient.Filter[2].INT[1].6	Boolean			
A	456		Status	FILTER #2 - Effluent to Clearwell Valve - Fault	AWCPLC.ToClient.Filter[2].INT[1].7	Boolean			
A	457		Status	FILTER #2 - Turbidity Sample Solenoid Valve - In Auto	AWCPLC.ToClient.Filter[2].INT[1].8	Boolean			
A	458		Status	FILTER #2 - Turbidity Sample Solenoid Valve - Open Command	AWCPLC.ToClient.Filter[2].INT[1].9	Boolean			
A	459		Status	FILTER #2 - Rinse To Waste Valve - In Auto	AWCPLC.ToClient.Filter[2].INT[1].10	Boolean			
A	460		Status	FILTER #2 - Rinse To Waste Valve - Opened	AWCPLC.ToClient.Filter[2].INT[1].11	Boolean			
A	461		Status	FILTER #2 - Rinse To Waste Valve - Fault	AWCPLC.ToClient.Filter[2].INT[1].12	Boolean			
A	462		Status	FILTER #2 - Backwash Supply Valve - In Auto	AWCPLC.ToClient.Filter[2].INT[1].13	Boolean			
A	463		Status	FILTER #2 - Backwash Supply Valve - Opened	AWCPLC.ToClient.Filter[2].INT[1].14	Boolean			
A	464		Status	FILTER #2 - Backwash Supply Valve - Fault	AWCPLC.ToClient.Filter[2].INT[1].15	Boolean			
A	465		Status	FILTER #2 - Air Scour Valve - In Auto	AWCPLC.ToClient.Filter[2].INT[2].0	Boolean			
A	466		Status	FILTER #2 - Air Scour Valve - Opened	AWCPLC.ToClient.Filter[2].INT[2].1	Boolean			
A	467		Status	FILTER #2 - Air Scour Valve - Fault	AWCPLC.ToClient.Filter[2].INT[2].2	Boolean			
A	468				AWCPLC.ToClient.Filter[2].INT[2].3	Boolean			
A	469				AWCPLC.ToClient.Filter[2].INT[2].4	Boolean			
A	470				AWCPLC.ToClient.Filter[2].INT[2].5	Boolean			
A	471				AWCPLC.ToClient.Filter[2].INT[2].6	Boolean			
A	472				AWCPLC.ToClient.Filter[2].INT[2].7	Boolean			
A	473				AWCPLC.ToClient.Filter[2].INT[2].8	Boolean			
A	474				AWCPLC.ToClient.Filter[2].INT[2].9	Boolean			
A	475				AWCPLC.ToClient.Filter[2].INT[2].10	Boolean			
A	476				AWCPLC.ToClient.Filter[2].INT[2].11	Boolean			
A	477				AWCPLC.ToClient.Filter[2].INT[2].12	Boolean			
A	478				AWCPLC.ToClient.Filter[2].INT[2].13	Boolean			
A	479				AWCPLC.ToClient.Filter[2].INT[2].14	Boolean			
A	480				AWCPLC.ToClient.Filter[2].INT[2].15	Boolean			
A	481		Status	FILTER #2 - Level	AWCPLC.ToClient.Filter[2].REAL[0]	Real			
A	482		Status	FILTER #2 - Pressure	AWCPLC.ToClient.Filter[2].REAL[1]	Real			
A	483		Status	FILTER #2 - Turbidity	AWCPLC.ToClient.Filter[2].REAL[2]	Real			
A	484		Setpoint	FILTER #2 - Pre-Rinse Turbidity SP	AWCPLC.ToClient.Filter[2].REAL[3]	Real			
A	485		Setpoint	FILTER #2 - Pre-Rinse Turbidity Lo Time SP	AWCPLC.ToClient.Filter[2].REAL[4]	Real			
A	486		Setpoint	FILTER #2 - Pre-Rinse Turbidity Hi Time SP	AWCPLC.ToClient.Filter[2].REAL[5]	Real			
A	487		Setpoint	FILTER #2 - Operating Level SP	AWCPLC.ToClient.Filter[2].REAL[6]	Real			
A	488		Setpoint	FILTER #2 - Backwash Mode - Time SP	AWCPLC.ToClient.Filter[2].REAL[7]	Real			
A	489		Setpoint	FILTER #2 - Backwash Mode - Loss of Head SP	AWCPLC.ToClient.Filter[2].REAL[8]	Real			
A	490		Setpoint	FILTER #2 - Backwash Mode - Turbidity SP	AWCPLC.ToClient.Filter[2].REAL[9]	Real			
A	491		Setpoint	FILTER #2 - Backwash Mode - Drain SP	AWCPLC.ToClient.Filter[2].REAL[10]	Real			
A	492		Setpoint	FILTER #2 - Backwash Mode - Air Scour Time SP	AWCPLC.ToClient.Filter[2].REAL[11]	Real			
A	493		Setpoint	FILTER #2 - Backwash Mode - Air Scour Lo Flow Time SP	AWCPLC.ToClient.Filter[2].REAL[12]	Real			
A	494		Setpoint	FILTER #2 - Backwash Mode - Low Flow Time SP	AWCPLC.ToClient.Filter[2].REAL[13]	Real			
A	495		Setpoint	FILTER #2 - Backwash Mode - High Flow Time SP	AWCPLC.ToClient.Filter[2].REAL[14]	Real			
A	496		Setpoint	FILTER #2 - Backwash Mode - Settle Time SP	AWCPLC.ToClient.Filter[2].REAL[15]	Real			
A	497		Setpoint	FILTER #2 - Backwash Mode - Rinse Time SP	AWCPLC.ToClient.Filter[2].REAL[16]	Real			
A	498		Status	FILTER #2 - Effluent to Clearwell Valve Position	AWCPLC.ToClient.Filter[2].REAL[17]	Real			
A	499		Status	FILTER #2 - Rinse To Waste Valve Position	AWCPLC.ToClient.Filter[2].REAL[18]	Real			
A	500				AWCPLC.ToClient.Filter[2].REAL[19]	Real			
A	501				AWCPLC.ToClient.Filter[2].REAL[20]	Real			

AWC To Client PLC

R1v	No.	AWC					Client		
		Tag No.	Status / SP	Tag Description	AWC Produced Tag	Type	Tag No.	Tag Description	Notes
A	502		Status	FILTER #3 - Interlock	AWCPLC.ToClient.Filter[3].INT[0].0	Boolean			
A	503		Status	FILTER #3 - Not In Operation	AWCPLC.ToClient.Filter[3].INT[0].1	Boolean			
A	504		Status	FILTER #3 - Pre-Rinse Mode	AWCPLC.ToClient.Filter[3].INT[0].2	Boolean			
A	505		Status		AWCPLC.ToClient.Filter[3].INT[0].3	Boolean			
A	506		Status	FILTER #3 - Running / Filtering Mode	AWCPLC.ToClient.Filter[3].INT[0].4	Boolean			
A	507		Status	FILTER #3 - Backwash Standby	AWCPLC.ToClient.Filter[3].INT[0].5	Boolean			
A	508		Status	FILTER #3 - Backwash Mode Active	AWCPLC.ToClient.Filter[3].INT[0].6	Boolean			
A	509		Status	FILTER #3 - Backwash Mode - Draining	AWCPLC.ToClient.Filter[3].INT[0].7	Boolean			
A	510		Command	FILTER #3 - Backwash Mode - Start Air Blower	AWCPLC.ToClient.Filter[3].INT[0].8	Boolean			
A	511		Command	FILTER #3 - Backwash Mode - Backwash Pumps Run Request	AWCPLC.ToClient.Filter[3].INT[0].9	Boolean			
A	512		Status	FILTER #3 - Backwash Mode - Low Flow	AWCPLC.ToClient.Filter[3].INT[0].10	Boolean			
A	513		Status	FILTER #3 - Backwash Mode - High Flow	AWCPLC.ToClient.Filter[3].INT[0].11	Boolean			
A	514		Status	FILTER #3 - Backwash Mode - Settle / Rinse	AWCPLC.ToClient.Filter[3].INT[0].12	Boolean			
A	515		Setpoint	FILTER #3 - Backwash Mode - Time Enabled SP	AWCPLC.ToClient.Filter[3].INT[0].13	Boolean			
A	516		Setpoint	FILTER #3 - Backwash Mode - Loss of Head Enabled SP	AWCPLC.ToClient.Filter[3].INT[0].14	Boolean			
A	517		Setpoint	FILTER #3 - Backwash Mode - Turbidity Enabled SP	AWCPLC.ToClient.Filter[3].INT[0].15	Boolean			
A	518		Setpoint	FILTER #3 - Backwash Mode - Manual Enabled SP	AWCPLC.ToClient.Filter[3].INT[1].0	Boolean			
A	519		Setpoint	FILTER #3 - Diverting To Waste Enabled SP	AWCPLC.ToClient.Filter[3].INT[1].1	Boolean			
A	520		Status	FILTER #3 - Inlet Valve - In Auto	AWCPLC.ToClient.Filter[3].INT[1].2	Boolean			
A	521		Status	FILTER #3 - Inlet Valve - Opened	AWCPLC.ToClient.Filter[3].INT[1].3	Boolean			
A	522		Status	FILTER #3 - Inlet Valve - Fault	AWCPLC.ToClient.Filter[3].INT[1].4	Boolean			
A	523		Status	FILTER #3 - Effluent to Clearwell Valve - In Auto	AWCPLC.ToClient.Filter[3].INT[1].5	Boolean			
A	524		Status	FILTER #3 - Effluent to Clearwell Valve - Opened	AWCPLC.ToClient.Filter[3].INT[1].6	Boolean			
A	525		Status	FILTER #3 - Effluent to Clearwell Valve - Fault	AWCPLC.ToClient.Filter[3].INT[1].7	Boolean			
A	526		Status	FILTER #3 - Turbidity Sample Solenoid Valve - In Auto	AWCPLC.ToClient.Filter[3].INT[1].8	Boolean			
A	527		Status	FILTER #3 - Turbidity Sample Solenoid Valve - Open Command	AWCPLC.ToClient.Filter[3].INT[1].9	Boolean			
A	528		Status	FILTER #3 - Rinse To Waste Valve - In Auto	AWCPLC.ToClient.Filter[3].INT[1].10	Boolean			
A	529		Status	FILTER #3 - Rinse To Waste Valve - Opened	AWCPLC.ToClient.Filter[3].INT[1].11	Boolean			
A	530		Status	FILTER #3 - Rinse To Waste Valve - Fault	AWCPLC.ToClient.Filter[3].INT[1].12	Boolean			
A	531		Status	FILTER #3 - Backwash Supply Valve - In Auto	AWCPLC.ToClient.Filter[3].INT[1].13	Boolean			
A	532		Status	FILTER #3 - Backwash Supply Valve - Opened	AWCPLC.ToClient.Filter[3].INT[1].14	Boolean			
A	533		Status	FILTER #3 - Backwash Supply Valve - Fault	AWCPLC.ToClient.Filter[3].INT[1].15	Boolean			
A	534		Status	FILTER #3 - Air Scour Valve - In Auto	AWCPLC.ToClient.Filter[3].INT[2].0	Boolean			
A	535		Status	FILTER #3 - Air Scour Valve - Opened	AWCPLC.ToClient.Filter[3].INT[2].1	Boolean			
A	536		Status	FILTER #3 - Air Scour Valve - Fault	AWCPLC.ToClient.Filter[3].INT[2].2	Boolean			
A	537				AWCPLC.ToClient.Filter[3].INT[2].3	Boolean			
A	538				AWCPLC.ToClient.Filter[3].INT[2].4	Boolean			
A	539				AWCPLC.ToClient.Filter[3].INT[2].5	Boolean			
A	540				AWCPLC.ToClient.Filter[3].INT[2].6	Boolean			
A	541				AWCPLC.ToClient.Filter[3].INT[2].7	Boolean			
A	542				AWCPLC.ToClient.Filter[3].INT[2].8	Boolean			
A	543				AWCPLC.ToClient.Filter[3].INT[2].9	Boolean			
A	544				AWCPLC.ToClient.Filter[3].INT[2].10	Boolean			
A	545				AWCPLC.ToClient.Filter[3].INT[2].11	Boolean			
A	546				AWCPLC.ToClient.Filter[3].INT[2].12	Boolean			
A	547				AWCPLC.ToClient.Filter[3].INT[2].13	Boolean			
A	548				AWCPLC.ToClient.Filter[3].INT[2].14	Boolean			
A	549				AWCPLC.ToClient.Filter[3].INT[2].15	Boolean			
A	550		Status	FILTER #3 - Level	AWCPLC.ToClient.Filter[3].REAL[0]	Real			
A	551		Status	FILTER #3 - Pressure	AWCPLC.ToClient.Filter[3].REAL[1]	Real			
A	552		Status	FILTER #3 - Turbidity	AWCPLC.ToClient.Filter[3].REAL[2]	Real			
A	553		Setpoint	FILTER #3 - Pre-Rinse Turbidity SP	AWCPLC.ToClient.Filter[3].REAL[3]	Real			
A	554		Setpoint	FILTER #3 - Pre-Rinse Turbidity Lo Time SP	AWCPLC.ToClient.Filter[3].REAL[4]	Real			
A	555		Setpoint	FILTER #3 - Pre-Rinse Turbidity Hi Time SP	AWCPLC.ToClient.Filter[3].REAL[5]	Real			
A	556		Setpoint	FILTER #3 - Operating Level SP	AWCPLC.ToClient.Filter[3].REAL[6]	Real			
A	557		Setpoint	FILTER #3 - Backwash Mode - Time SP	AWCPLC.ToClient.Filter[3].REAL[7]	Real			
A	558		Setpoint	FILTER #3 - Backwash Mode - Loss of Head SP	AWCPLC.ToClient.Filter[3].REAL[8]	Real			
A	559		Setpoint	FILTER #3 - Backwash Mode - Turbidity SP	AWCPLC.ToClient.Filter[3].REAL[9]	Real			
A	560		Setpoint	FILTER #3 - Backwash Mode - Drain SP	AWCPLC.ToClient.Filter[3].REAL[10]	Real			
A	561		Setpoint	FILTER #3 - Backwash Mode - Air Scour Time SP	AWCPLC.ToClient.Filter[3].REAL[11]	Real			
A	562		Setpoint	FILTER #3 - Backwash Mode - Air Scour Lo Flow Time SP	AWCPLC.ToClient.Filter[3].REAL[12]	Real			
A	563		Setpoint	FILTER #3 - Backwash Mode - Low Flow Time SP	AWCPLC.ToClient.Filter[3].REAL[13]	Real			
A	564		Setpoint	FILTER #3 - Backwash Mode - High Flow Time SP	AWCPLC.ToClient.Filter[3].REAL[14]	Real			
A	565		Setpoint	FILTER #3 - Backwash Mode - Settle Time SP	AWCPLC.ToClient.Filter[3].REAL[15]	Real			
A	566		Setpoint	FILTER #3 - Backwash Mode - Rinse Time SP	AWCPLC.ToClient.Filter[3].REAL[16]	Real			
A	567		Status	FILTER #3 - Effluent to Clearwell Valve Position	AWCPLC.ToClient.Filter[3].REAL[17]	Real			
A	568		Status	FILTER #3 - Rinse To Waste Valve Position	AWCPLC.ToClient.Filter[3].REAL[18]	Real			
A	569				AWCPLC.ToClient.Filter[3].REAL[19]	Real			
A	570				AWCPLC.ToClient.Filter[3].REAL[20]	Real			

AWC To Client PLC

R1v	No.	AWC					Client		
		Tag No.	Status / SP	Tag Description	AWC Produced Tag	Type	Tag No.	Tag Description	Notes
A	571		Status	FILTER #4 - Interlock	AWCPLC.ToClient.Filter[4].INT[0].0	Boolean			
A	572		Status	FILTER #4 - Not In Operation	AWCPLC.ToClient.Filter[4].INT[0].1	Boolean			
A	573		Status	FILTER #4 - Pre-Rinse Mode	AWCPLC.ToClient.Filter[4].INT[0].2	Boolean			
A	574		Status		AWCPLC.ToClient.Filter[4].INT[0].3	Boolean			
A	575		Status	FILTER #4 - Running / Filtering Mode	AWCPLC.ToClient.Filter[4].INT[0].4	Boolean			
A	576		Status	FILTER #4 - Backwash Standby	AWCPLC.ToClient.Filter[4].INT[0].5	Boolean			
A	577		Status	FILTER #4 - Backwash Mode Active	AWCPLC.ToClient.Filter[4].INT[0].6	Boolean			
A	578		Status	FILTER #4 - Backwash Mode - Draining	AWCPLC.ToClient.Filter[4].INT[0].7	Boolean			
A	579		Command	FILTER #4 - Backwash Mode - Start Air Blower	AWCPLC.ToClient.Filter[4].INT[0].8	Boolean			
A	580		Command	FILTER #4 - Backwash Mode - Backwash Pumps Run Request	AWCPLC.ToClient.Filter[4].INT[0].9	Boolean			
A	581		Status	FILTER #4 - Backwash Mode - Low Flow	AWCPLC.ToClient.Filter[4].INT[0].10	Boolean			
A	582		Status	FILTER #4 - Backwash Mode - High Flow	AWCPLC.ToClient.Filter[4].INT[0].11	Boolean			
A	583		Status	FILTER #4 - Backwash Mode - Settle / Rinse	AWCPLC.ToClient.Filter[4].INT[0].12	Boolean			
A	584		Setpoint	FILTER #4 - Backwash Mode - Time Enabled SP	AWCPLC.ToClient.Filter[4].INT[0].13	Boolean			
A	585		Setpoint	FILTER #4 - Backwash Mode - Loss of Head Enabled SP	AWCPLC.ToClient.Filter[4].INT[0].14	Boolean			
A	586		Setpoint	FILTER #4 - Backwash Mode - Turbidity Enabled SP	AWCPLC.ToClient.Filter[4].INT[0].15	Boolean			
A	587		Setpoint	FILTER #4 - Backwash Mode - Manual Enabled SP	AWCPLC.ToClient.Filter[4].INT[1].0	Boolean			
A	588		Setpoint	FILTER #4 - Diverting To Waste Enabled SP	AWCPLC.ToClient.Filter[4].INT[1].1	Boolean			
A	589		Status	FILTER #4 - Inlet Valve - In Auto	AWCPLC.ToClient.Filter[4].INT[1].2	Boolean			
A	590		Status	FILTER #4 - Inlet Valve - Opened	AWCPLC.ToClient.Filter[4].INT[1].3	Boolean			
A	591		Status	FILTER #4 - Inlet Valve - Fault	AWCPLC.ToClient.Filter[4].INT[1].4	Boolean			
A	592		Status	FILTER #4 - Effluent to Clearwell Valve - In Auto	AWCPLC.ToClient.Filter[4].INT[1].5	Boolean			
A	593		Status	FILTER #4 - Effluent to Clearwell Valve - Opened	AWCPLC.ToClient.Filter[4].INT[1].6	Boolean			
A	594		Status	FILTER #4 - Effluent to Clearwell Valve - Fault	AWCPLC.ToClient.Filter[4].INT[1].7	Boolean			
A	595		Status	FILTER #4 - Turbidity Sample Solenoid Valve - In Auto	AWCPLC.ToClient.Filter[4].INT[1].8	Boolean			
A	596		Status	FILTER #4 - Turbidity Sample Solenoid Valve - Open Command	AWCPLC.ToClient.Filter[4].INT[1].9	Boolean			
A	597		Status	FILTER #4 - Rinse To Waste Valve - In Auto	AWCPLC.ToClient.Filter[4].INT[1].10	Boolean			
A	598		Status	FILTER #4 - Rinse To Waste Valve - Opened	AWCPLC.ToClient.Filter[4].INT[1].11	Boolean			
A	599		Status	FILTER #4 - Rinse To Waste Valve - Fault	AWCPLC.ToClient.Filter[4].INT[1].12	Boolean			
A	600		Status	FILTER #4 - Backwash Supply Valve - In Auto	AWCPLC.ToClient.Filter[4].INT[1].13	Boolean			
A	601		Status	FILTER #4 - Backwash Supply Valve - Opened	AWCPLC.ToClient.Filter[4].INT[1].14	Boolean			
A	602		Status	FILTER #4 - Backwash Supply Valve - Fault	AWCPLC.ToClient.Filter[4].INT[1].15	Boolean			
A	603		Status	FILTER #4 - Air Scour Valve - In Auto	AWCPLC.ToClient.Filter[4].INT[2].0	Boolean			
A	604		Status	FILTER #4 - Air Scour Valve - Opened	AWCPLC.ToClient.Filter[4].INT[2].1	Boolean			
A	605		Status	FILTER #4 - Air Scour Valve - Fault	AWCPLC.ToClient.Filter[4].INT[2].2	Boolean			
A	606				AWCPLC.ToClient.Filter[4].INT[2].3	Boolean			
A	607				AWCPLC.ToClient.Filter[4].INT[2].4	Boolean			
A	608				AWCPLC.ToClient.Filter[4].INT[2].5	Boolean			
A	609				AWCPLC.ToClient.Filter[4].INT[2].6	Boolean			
A	610				AWCPLC.ToClient.Filter[4].INT[2].7	Boolean			
A	611				AWCPLC.ToClient.Filter[4].INT[2].8	Boolean			
A	612				AWCPLC.ToClient.Filter[4].INT[2].9	Boolean			
A	613				AWCPLC.ToClient.Filter[4].INT[2].10	Boolean			
A	614				AWCPLC.ToClient.Filter[4].INT[2].11	Boolean			
A	615				AWCPLC.ToClient.Filter[4].INT[2].12	Boolean			
A	616				AWCPLC.ToClient.Filter[4].INT[2].13	Boolean			
A	617				AWCPLC.ToClient.Filter[4].INT[2].14	Boolean			
A	618				AWCPLC.ToClient.Filter[4].INT[2].15	Boolean			
A	619		Status	FILTER #4 - Level	AWCPLC.ToClient.Filter[4].REAL[0]	Real			
A	620		Status	FILTER #4 - Pressure	AWCPLC.ToClient.Filter[4].REAL[1]	Real			
A	621		Status	FILTER #4 - Turbidity	AWCPLC.ToClient.Filter[4].REAL[2]	Real			
A	622		Setpoint	FILTER #4 - Pre-Rinse Turbidity SP	AWCPLC.ToClient.Filter[4].REAL[3]	Real			
A	623		Setpoint	FILTER #4 - Pre-Rinse Turbidity Lo Time SP	AWCPLC.ToClient.Filter[4].REAL[4]	Real			
A	624		Setpoint	FILTER #4 - Pre-Rinse Turbidity Hi Time SP	AWCPLC.ToClient.Filter[4].REAL[5]	Real			
A	625		Setpoint	FILTER #4 - Operating Level SP	AWCPLC.ToClient.Filter[4].REAL[6]	Real			
A	626		Setpoint	FILTER #4 - Backwash Mode - Time SP	AWCPLC.ToClient.Filter[4].REAL[7]	Real			
A	627		Setpoint	FILTER #4 - Backwash Mode - Loss of Head SP	AWCPLC.ToClient.Filter[4].REAL[8]	Real			
A	628		Setpoint	FILTER #4 - Backwash Mode - Turbidity SP	AWCPLC.ToClient.Filter[4].REAL[9]	Real			
A	629		Setpoint	FILTER #4 - Backwash Mode - Drain SP	AWCPLC.ToClient.Filter[4].REAL[10]	Real			
A	630		Setpoint	FILTER #4 - Backwash Mode - Air Scour Time SP	AWCPLC.ToClient.Filter[4].REAL[11]	Real			
A	631		Setpoint	FILTER #4 - Backwash Mode - Air Scour Lo Flow Time SP	AWCPLC.ToClient.Filter[4].REAL[12]	Real			
A	632		Setpoint	FILTER #4 - Backwash Mode - Low Flow Time SP	AWCPLC.ToClient.Filter[4].REAL[13]	Real			
A	633		Setpoint	FILTER #4 - Backwash Mode - High Flow Time SP	AWCPLC.ToClient.Filter[4].REAL[14]	Real			
A	634		Setpoint	FILTER #4 - Backwash Mode - Settle Time SP	AWCPLC.ToClient.Filter[4].REAL[15]	Real			
A	635		Setpoint	FILTER #4 - Backwash Mode - Rinse Time SP	AWCPLC.ToClient.Filter[4].REAL[16]	Real			
A	636		Status	FILTER #4 - Effluent to Clearwell Valve Position	AWCPLC.ToClient.Filter[4].REAL[17]	Real			
A	637		Status	FILTER #4 - Rinse To Waste Valve Position	AWCPLC.ToClient.Filter[4].REAL[18]	Real			
A	638				AWCPLC.ToClient.Filter[4].REAL[19]	Real			
A	639				AWCPLC.ToClient.Filter[4].REAL[20]	Real			

AWC To Client PLC

R1v	No.	AWC					Client		
		Tag No.	Status / SP	Tag Description	AWC Produced Tag	Type	Tag No.	Tag Description	Notes
A	640		Status	FILTER #5 - Interlock	AWCPLC.ToClient.Filter[5].INT[0].0	Boolean			
A	641		Status	FILTER #5 - Not In Operation	AWCPLC.ToClient.Filter[5].INT[0].1	Boolean			
A	642		Status	FILTER #5 - Pre-Rinse Mode	AWCPLC.ToClient.Filter[5].INT[0].2	Boolean			
A	643		Status		AWCPLC.ToClient.Filter[5].INT[0].3	Boolean			
A	644		Status	FILTER #5 - Running / Filtering Mode	AWCPLC.ToClient.Filter[5].INT[0].4	Boolean			
A	645		Status	FILTER #5 - Backwash Standby	AWCPLC.ToClient.Filter[5].INT[0].5	Boolean			
A	646		Status	FILTER #5 - Backwash Mode Active	AWCPLC.ToClient.Filter[5].INT[0].6	Boolean			
A	647		Status	FILTER #5 - Backwash Mode - Draining	AWCPLC.ToClient.Filter[5].INT[0].7	Boolean			
A	648		Command	FILTER #5 - Backwash Mode - Start Air Blower	AWCPLC.ToClient.Filter[5].INT[0].8	Boolean			
A	649		Command	FILTER #5 - Backwash Mode - Backwash Pumps Run Request	AWCPLC.ToClient.Filter[5].INT[0].9	Boolean			
A	650		Status	FILTER #5 - Backwash Mode - Low Flow	AWCPLC.ToClient.Filter[5].INT[0].10	Boolean			
A	651		Status	FILTER #5 - Backwash Mode - High Flow	AWCPLC.ToClient.Filter[5].INT[0].11	Boolean			
A	652		Status	FILTER #5 - Backwash Mode - Settle / Rinse	AWCPLC.ToClient.Filter[5].INT[0].12	Boolean			
A	653		Setpoint	FILTER #5 - Backwash Mode - Time Enabled SP	AWCPLC.ToClient.Filter[5].INT[0].13	Boolean			
A	654		Setpoint	FILTER #5 - Backwash Mode - Loss of Head Enabled SP	AWCPLC.ToClient.Filter[5].INT[0].14	Boolean			
A	655		Setpoint	FILTER #5 - Backwash Mode - Turbidity Enabled SP	AWCPLC.ToClient.Filter[5].INT[0].15	Boolean			
A	656		Setpoint	FILTER #5 - Backwash Mode - Manual Enabled SP	AWCPLC.ToClient.Filter[5].INT[1].0	Boolean			
A	657		Setpoint	FILTER #5 - Diverting To Waste Enabled SP	AWCPLC.ToClient.Filter[5].INT[1].1	Boolean			
A	658		Status	FILTER #5 - Inlet Valve - In Auto	AWCPLC.ToClient.Filter[5].INT[1].2	Boolean			
A	659		Status	FILTER #5 - Inlet Valve - Opened	AWCPLC.ToClient.Filter[5].INT[1].3	Boolean			
A	660		Status	FILTER #5 - Inlet Valve - Fault	AWCPLC.ToClient.Filter[5].INT[1].4	Boolean			
A	661		Status	FILTER #5 - Effluent to Clearwell Valve - In Auto	AWCPLC.ToClient.Filter[5].INT[1].5	Boolean			
A	662		Status	FILTER #5 - Effluent to Clearwell Valve - Opened	AWCPLC.ToClient.Filter[5].INT[1].6	Boolean			
A	663		Status	FILTER #5 - Effluent to Clearwell Valve - Fault	AWCPLC.ToClient.Filter[5].INT[1].7	Boolean			
A	664		Status	FILTER #5 - Turbidity Sample Solenoid Valve - In Auto	AWCPLC.ToClient.Filter[5].INT[1].8	Boolean			
A	665		Status	FILTER #5 - Turbidity Sample Solenoid Valve - Open Command	AWCPLC.ToClient.Filter[5].INT[1].9	Boolean			
A	666		Status	FILTER #5 - Rinse To Waste Valve - In Auto	AWCPLC.ToClient.Filter[5].INT[1].10	Boolean			
A	667		Status	FILTER #5 - Rinse To Waste Valve - Opened	AWCPLC.ToClient.Filter[5].INT[1].11	Boolean			
A	668		Status	FILTER #5 - Rinse To Waste Valve - Fault	AWCPLC.ToClient.Filter[5].INT[1].12	Boolean			
A	669		Status	FILTER #5 - Backwash Supply Valve - In Auto	AWCPLC.ToClient.Filter[5].INT[1].13	Boolean			
A	670		Status	FILTER #5 - Backwash Supply Valve - Opened	AWCPLC.ToClient.Filter[5].INT[1].14	Boolean			
A	671		Status	FILTER #5 - Backwash Supply Valve - Fault	AWCPLC.ToClient.Filter[5].INT[1].15	Boolean			
A	672		Status	FILTER #5 - Air Scour Valve - In Auto	AWCPLC.ToClient.Filter[5].INT[2].0	Boolean			
A	673		Status	FILTER #5 - Air Scour Valve - Opened	AWCPLC.ToClient.Filter[5].INT[2].1	Boolean			
A	674		Status	FILTER #5 - Air Scour Valve - Fault	AWCPLC.ToClient.Filter[5].INT[2].2	Boolean			
A	675				AWCPLC.ToClient.Filter[5].INT[2].3	Boolean			
A	676				AWCPLC.ToClient.Filter[5].INT[2].4	Boolean			
A	677				AWCPLC.ToClient.Filter[5].INT[2].5	Boolean			
A	678				AWCPLC.ToClient.Filter[5].INT[2].6	Boolean			
A	679				AWCPLC.ToClient.Filter[5].INT[2].7	Boolean			
A	680				AWCPLC.ToClient.Filter[5].INT[2].8	Boolean			
A	681				AWCPLC.ToClient.Filter[5].INT[2].9	Boolean			
A	682				AWCPLC.ToClient.Filter[5].INT[2].10	Boolean			
A	683				AWCPLC.ToClient.Filter[5].INT[2].11	Boolean			
A	684				AWCPLC.ToClient.Filter[5].INT[2].12	Boolean			
A	685				AWCPLC.ToClient.Filter[5].INT[2].13	Boolean			
A	686				AWCPLC.ToClient.Filter[5].INT[2].14	Boolean			
A	687				AWCPLC.ToClient.Filter[5].INT[2].15	Boolean			
A	688		Status	FILTER #5 - Level	AWCPLC.ToClient.Filter[5].REAL[0]	Real			
A	689		Status	FILTER #5 - Pressure	AWCPLC.ToClient.Filter[5].REAL[1]	Real			
A	690		Status	FILTER #5 - Turbidity	AWCPLC.ToClient.Filter[5].REAL[2]	Real			
A	691		Setpoint	FILTER #5 - Pre-Rinse Turbidity SP	AWCPLC.ToClient.Filter[5].REAL[3]	Real			
A	692		Setpoint	FILTER #5 - Pre-Rinse Turbidity Lo Time SP	AWCPLC.ToClient.Filter[5].REAL[4]	Real			
A	693		Setpoint	FILTER #5 - Pre-Rinse Turbidity Hi Time SP	AWCPLC.ToClient.Filter[5].REAL[5]	Real			
A	694		Setpoint	FILTER #5 - Operating Level SP	AWCPLC.ToClient.Filter[5].REAL[6]	Real			
A	695		Setpoint	FILTER #5 - Backwash Mode - Time SP	AWCPLC.ToClient.Filter[5].REAL[7]	Real			
A	696		Setpoint	FILTER #5 - Backwash Mode - Loss of Head SP	AWCPLC.ToClient.Filter[5].REAL[8]	Real			
A	697		Setpoint	FILTER #5 - Backwash Mode - Turbidity SP	AWCPLC.ToClient.Filter[5].REAL[9]	Real			
A	698		Setpoint	FILTER #5 - Backwash Mode - Drain SP	AWCPLC.ToClient.Filter[5].REAL[10]	Real			
A	699		Setpoint	FILTER #5 - Backwash Mode - Air Scour Time SP	AWCPLC.ToClient.Filter[5].REAL[11]	Real			
A	700		Setpoint	FILTER #5 - Backwash Mode - Air Scour Lo Flow Time SP	AWCPLC.ToClient.Filter[5].REAL[12]	Real			
A	701		Setpoint	FILTER #5 - Backwash Mode - Low Flow Time SP	AWCPLC.ToClient.Filter[5].REAL[13]	Real			
A	702		Setpoint	FILTER #5 - Backwash Mode - High Flow Time SP	AWCPLC.ToClient.Filter[5].REAL[14]	Real			
A	703		Setpoint	FILTER #5 - Backwash Mode - Settle Time SP	AWCPLC.ToClient.Filter[5].REAL[15]	Real			
A	704		Setpoint	FILTER #5 - Backwash Mode - Rinse Time SP	AWCPLC.ToClient.Filter[5].REAL[16]	Real			
A	705		Status	FILTER #5 - Effluent to Clearwell Valve Position	AWCPLC.ToClient.Filter[5].REAL[17]	Real			
A	706		Status	FILTER #5 - Rinse To Waste Valve Position	AWCPLC.ToClient.Filter[5].REAL[18]	Real			
A	707				AWCPLC.ToClient.Filter[5].REAL[19]	Real			
A	708				AWCPLC.ToClient.Filter[5].REAL[20]	Real			

AWC To Client PLC

R1v	No.	AWC					Client		
		Tag No.	Status / SP	Tag Description	AWC Produced Tag	Type	Tag No.	Tag Description	Notes
A	709		Status	FILTER #6 - Interlock	AWCPLC.ToClient.Filter[6].INT[0].0	Boolean			
A	710		Status	FILTER #6 - Not In Operation	AWCPLC.ToClient.Filter[6].INT[0].1	Boolean			
A	711		Status	FILTER #6 - Pre-Rinse Mode	AWCPLC.ToClient.Filter[6].INT[0].2	Boolean			
A	712		Status		AWCPLC.ToClient.Filter[6].INT[0].3	Boolean			
A	713		Status	FILTER #6 - Running / Filtering Mode	AWCPLC.ToClient.Filter[6].INT[0].4	Boolean			
A	714		Status	FILTER #6 - Backwash Standby	AWCPLC.ToClient.Filter[6].INT[0].5	Boolean			
A	715		Status	FILTER #6 - Backwash Mode Active	AWCPLC.ToClient.Filter[6].INT[0].6	Boolean			
A	716		Status	FILTER #6 - Backwash Mode - Draining	AWCPLC.ToClient.Filter[6].INT[0].7	Boolean			
A	717		Command	FILTER #6 - Backwash Mode - Start Air Blower	AWCPLC.ToClient.Filter[6].INT[0].8	Boolean			
A	718		Command	FILTER #6 - Backwash Mode - Backwash Pumps Run Request	AWCPLC.ToClient.Filter[6].INT[0].9	Boolean			
A	719		Status	FILTER #6 - Backwash Mode - Low Flow	AWCPLC.ToClient.Filter[6].INT[0].10	Boolean			
A	720		Status	FILTER #6 - Backwash Mode - High Flow	AWCPLC.ToClient.Filter[6].INT[0].11	Boolean			
A	721		Status	FILTER #6 - Backwash Mode - Settle / Rinse	AWCPLC.ToClient.Filter[6].INT[0].12	Boolean			
A	722		Setpoint	FILTER #6 - Backwash Mode - Time Enabled SP	AWCPLC.ToClient.Filter[6].INT[0].13	Boolean			
A	723		Setpoint	FILTER #6 - Backwash Mode - Loss of Head Enabled SP	AWCPLC.ToClient.Filter[6].INT[0].14	Boolean			
A	724		Setpoint	FILTER #6 - Backwash Mode - Turbidity Enabled SP	AWCPLC.ToClient.Filter[6].INT[0].15	Boolean			
A	725		Setpoint	FILTER #6 - Backwash Mode - Manual Enabled SP	AWCPLC.ToClient.Filter[6].INT[1].0	Boolean			
A	726		Setpoint	FILTER #6 - Diverting To Waste Enabled SP	AWCPLC.ToClient.Filter[6].INT[1].1	Boolean			
A	727		Status	FILTER #6 - Inlet Valve - In Auto	AWCPLC.ToClient.Filter[6].INT[1].2	Boolean			
A	728		Status	FILTER #6 - Inlet Valve - Opened	AWCPLC.ToClient.Filter[6].INT[1].3	Boolean			
A	729		Status	FILTER #6 - Inlet Valve - Fault	AWCPLC.ToClient.Filter[6].INT[1].4	Boolean			
A	730		Status	FILTER #6 - Effluent to Clearwell Valve - In Auto	AWCPLC.ToClient.Filter[6].INT[1].5	Boolean			
A	731		Status	FILTER #6 - Effluent to Clearwell Valve - Opened	AWCPLC.ToClient.Filter[6].INT[1].6	Boolean			
A	732		Status	FILTER #6 - Effluent to Clearwell Valve - Fault	AWCPLC.ToClient.Filter[6].INT[1].7	Boolean			
A	733		Status	FILTER #6 - Turbidity Sample Solenoid Valve - In Auto	AWCPLC.ToClient.Filter[6].INT[1].8	Boolean			
A	734		Status	FILTER #6 - Turbidity Sample Solenoid Valve - Open Command	AWCPLC.ToClient.Filter[6].INT[1].9	Boolean			
A	735		Status	FILTER #6 - Rinse To Waste Valve - In Auto	AWCPLC.ToClient.Filter[6].INT[1].10	Boolean			
A	736		Status	FILTER #6 - Rinse To Waste Valve - Opened	AWCPLC.ToClient.Filter[6].INT[1].11	Boolean			
A	737		Status	FILTER #6 - Rinse To Waste Valve - Fault	AWCPLC.ToClient.Filter[6].INT[1].12	Boolean			
A	738		Status	FILTER #6 - Backwash Supply Valve - In Auto	AWCPLC.ToClient.Filter[6].INT[1].13	Boolean			
A	739		Status	FILTER #6 - Backwash Supply Valve - Opened	AWCPLC.ToClient.Filter[6].INT[1].14	Boolean			
A	740		Status	FILTER #6 - Backwash Supply Valve - Fault	AWCPLC.ToClient.Filter[6].INT[1].15	Boolean			
A	741		Status	FILTER #6 - Air Scour Valve - In Auto	AWCPLC.ToClient.Filter[6].INT[2].0	Boolean			
A	742		Status	FILTER #6 - Air Scour Valve - Opened	AWCPLC.ToClient.Filter[6].INT[2].1	Boolean			
A	743		Status	FILTER #6 - Air Scour Valve - Fault	AWCPLC.ToClient.Filter[6].INT[2].2	Boolean			
A	744				AWCPLC.ToClient.Filter[6].INT[2].3	Boolean			
A	745				AWCPLC.ToClient.Filter[6].INT[2].4	Boolean			
A	746				AWCPLC.ToClient.Filter[6].INT[2].5	Boolean			
A	747				AWCPLC.ToClient.Filter[6].INT[2].6	Boolean			
A	748				AWCPLC.ToClient.Filter[6].INT[2].7	Boolean			
A	749				AWCPLC.ToClient.Filter[6].INT[2].8	Boolean			
A	750				AWCPLC.ToClient.Filter[6].INT[2].9	Boolean			
A	751				AWCPLC.ToClient.Filter[6].INT[2].10	Boolean			
A	752				AWCPLC.ToClient.Filter[6].INT[2].11	Boolean			
A	753				AWCPLC.ToClient.Filter[6].INT[2].12	Boolean			
A	754				AWCPLC.ToClient.Filter[6].INT[2].13	Boolean			
A	755				AWCPLC.ToClient.Filter[6].INT[2].14	Boolean			
A	756				AWCPLC.ToClient.Filter[6].INT[2].15	Boolean			
A	757		Status	FILTER #6 - Level	AWCPLC.ToClient.Filter[6].REAL[0]	Real			
A	758		Status	FILTER #6 - Pressure	AWCPLC.ToClient.Filter[6].REAL[1]	Real			
A	759		Status	FILTER #6 - Turbidity	AWCPLC.ToClient.Filter[6].REAL[2]	Real			
A	760		Setpoint	FILTER #6 - Pre-Rinse Turbidity SP	AWCPLC.ToClient.Filter[6].REAL[3]	Real			
A	761		Setpoint	FILTER #6 - Pre-Rinse Turbidity Lo Time SP	AWCPLC.ToClient.Filter[6].REAL[4]	Real			
A	762		Setpoint	FILTER #6 - Pre-Rinse Turbidity Hi Time SP	AWCPLC.ToClient.Filter[6].REAL[5]	Real			
A	763		Setpoint	FILTER #6 - Operating Level SP	AWCPLC.ToClient.Filter[6].REAL[6]	Real			
A	764		Setpoint	FILTER #6 - Backwash Mode - Time SP	AWCPLC.ToClient.Filter[6].REAL[7]	Real			
A	765		Setpoint	FILTER #6 - Backwash Mode - Loss of Head SP	AWCPLC.ToClient.Filter[6].REAL[8]	Real			
A	766		Setpoint	FILTER #6 - Backwash Mode - Turbidity SP	AWCPLC.ToClient.Filter[6].REAL[9]	Real			
A	767		Setpoint	FILTER #6 - Backwash Mode - Drain SP	AWCPLC.ToClient.Filter[6].REAL[10]	Real			
A	768		Setpoint	FILTER #6 - Backwash Mode - Air Scour Time SP	AWCPLC.ToClient.Filter[6].REAL[11]	Real			
A	769		Setpoint	FILTER #6 - Backwash Mode - Air Scour Lo Flow Time SP	AWCPLC.ToClient.Filter[6].REAL[12]	Real			
A	770		Setpoint	FILTER #6 - Backwash Mode - Low Flow Time SP	AWCPLC.ToClient.Filter[6].REAL[13]	Real			
A	771		Setpoint	FILTER #6 - Backwash Mode - High Flow Time SP	AWCPLC.ToClient.Filter[6].REAL[14]	Real			
A	772		Setpoint	FILTER #6 - Backwash Mode - Settle Time SP	AWCPLC.ToClient.Filter[6].REAL[15]	Real			
A	773		Setpoint	FILTER #6 - Backwash Mode - Rinse Time SP	AWCPLC.ToClient.Filter[6].REAL[16]	Real			
A	774		Status	FILTER #6 - Effluent to Clearwell Valve Position	AWCPLC.ToClient.Filter[6].REAL[17]	Real			
A	775		Status	FILTER #6 - Rinse To Waste Valve Position	AWCPLC.ToClient.Filter[6].REAL[18]	Real			
A	776				AWCPLC.ToClient.Filter[6].REAL[19]	Real			
A	777				AWCPLC.ToClient.Filter[6].REAL[20]	Real			

PROJECT NAME: WRANGELL WTP

PROJECT NO.: 17805

DOCUMENT NAME: INSTRUMENT AND CONTROL SPARE PARTS LIST

DOCUMENT NO.: 17805-IC-LST-010

B	13-Feb-23	Issued for Review	MTB MTB	CV CV	MSM msm
A	30-Jan-23	Issued for Review	CV	MTB	MSM
Rev	**Date**	**Revision Description**	**Originator**	**Checker**	**Approver**

SPARE PARTS LIST

Rev	No.	Description of Parts	Manufacturer / Vendor	Part Identification No.	No. of Units recommended	Suggested Shelf Spare - Yes/No	Part of Proposal	Project App. Cost (CAD)	Notes
B	1	Level Transmitter - Radar - Open Path	Vega / Vega	VEGAPULS PS31.XXXXXNQHB	1	Yes	No	$0.00	Used for 01-LIT-020 or 02-LIT-119/219/319 or 03-LIT-141/161/181 or 03-LIT-241/261/281
A	2	10" Butterfly Valve - Raw Water Inlet	DeZurik / AWC Process	BAW, 10, F1, CI, NBRN-NBR,150B, DI-S2	1	Yes	No	$0.00	Used for 02-XV-104/204/304
A	3	ON/OFF Motor Operated Actuator - Raw Water Inlet	Rotork / Summit	IQT1000FA12	1	Yes	No	$0.00	Used for 02-XV-104/204/304 or 03-XV-147/167/187 or 03-XV-247/267/287
A	4	4" -Butterfly Valve - Recycle Return Valve	DeZurik / AWC Process	BAW,4,F1,CI,NBRN-NBR,150B,DI-S2	1	Yes	No	$0.00	Used for 02-XV-125/225/325
A	5	Modulating Motor Operated Actuator - Recycle Return Valve	Rotork / Summit	IQT250FA10	1	Yes	No	$0.00	Used for 02-XV-125/225/325
A	6	6" Butterfly Valve - Filter Inlet and Air Scour	DeZurik / AWC Process	BAW,6,F1,CI,NBRN-NBR,150B,DI-S2	1	Yes	No	$0.00	Used for 03-XV-140/160/180/240/260/280 or 03-XV-142/162/182/242/262/282 or 03-LV-146A/166A/186A & 03-LV-246A/266A/286A or 03-LV-146B/166B/186B & 03-LV-246B/266B/286B
A	7	ON/OFF Motor Operated Actuator - Filter Inlet and Air Scour	Rotork / Summit	IQT500FA10	1	Yes	No	$0.00	Used for 03-XV-140/160/180/240/260/280 or 03-XV-142/162/182/242/262/282
A	8	Modulating Motor Operated Actuator - Treated Water and Rinse To Waste	Rotork / Summit	IQT500FA10	1	Yes	No	$0.00	Used for 03-LV-146A/166A/186A & 03-LV-246A/266A/286A or 03-LV-146B/166B/186B & 03-LV-246B/266B/286B
A	9	12" Butterfly Valve - Filter Backwash Supply	DeZurik / AWC Process	BAW,12,F1,CI,NBRN-NBR,150B,DI-S2	1	Yes	No	$0.00	Used for 03-XV-147/167/187 & 03-XV-247/267/287
B	10	1/2" Solenoid Valve for Effluent Turbidity Sample and Saturator Air Supply -120 VAC 60Hz	ASCO / Emerson	SC8210G094MO-120VAC 60Hz	1	Yes	No	$0.00	Used for 03-AV-145/165/185, 03-AV-245/265/285 and 02-XV-132/232/332
A	11	3/4" Solenoid Operated Control Valve for Trough Spray	Cla-Val / Summit	136-01	1	Yes	No	$0.00	Used for 02-UV-114/214/314
A	12	Pressure Transmitter - Recycle Pump Suction (-30 inHG to +15 psig)	Wika / Centrix	A-10	1	Yes	No	$0.00	Used for 02-PT-122/222/322
A	13	Pressure Transmitter - Recycle Pump Discharge (0-160 psig)	Wika / Centrix	A-10	1	Yes	No	$0.00	Used for 02-PT-124/224/324
A	14	Pressure Transmitter - Filter Plenum (0-15 psig)	Wika / Centrix	A-10	1	Yes	No	$0.00	Used for 02-PT-143/163/183/243/263/283
A	15	Pressure Gauge - Recycle Pump Suction (-30 inHG to +15 psig)	Wika / Centrix	213.53DW	1	Yes	No	$0.00	Used for 02-PI-121/221/321
A	16	Pressure Gauge - Recycle Pump Discharge (0-150 psig)	Wika / Centrix	213.53DW	1	Yes	No	$0.00	Used for 02-PI-123/223/323 or 02-PI-130/230/330
A	17	Pressure Gauge - Filter Plenum (0-10 psig)	Wika / Centrix	213.53DW	1	Yes	No	$0.00	Used for 03-PI-144/164/184/244/264/284
A	18	Pressure Gauge - Air Compressor Outlet (0-200 psig)	Wika / Centrix	213.53DW	1	Yes	No	$0.00	Used for 08-PI-820
A	19	2" Magnetic Flow Transmitter - Recycle Pump Discharge	E&H / Centrix	5W4C50-AAELHA0DUA1K0A+AAL4Z1	1	Yes	No	$0.00	Used for 02-FIT-126/226/326
A	20	Level Transmitter (Differential Pressure) - Saturator Tank	E&H / Centrix	PMD55B-FA21BD67FGDHNJA1A+AAN3PBZ1+LR	1	Yes	No	$0.00	Used for 02-LIT-128/228/328
A	21	Hach SC1000 controller, 4 channels, 120 VAC (Display Module)	Hach / Hach	LXV402.99.00002	1	Yes	No	$0.00	Used for 03-AIT-145/165/185 or 03-AIT-245/265/285
A	22	Hach SC1000 Probe Module, 4 Channels	Hach / Hach	LXV.400.99.1R572	1	Yes	No	$0.00	Used for 03-AIT-145/165/185 or 03-AIT-245/265/285
A	23	Hach TU5300SC, Low Range Laser Turbidimeter, EPA	Hach / Hach	LXV445.99.10112	1	Yes	No	$0.00	Used for 03-AE-145/165/185 or 03-AE-245/265/285
A	24	StablCal Calibration Set w. RFID	Hach / Hach	LZY835	1	Yes	No	$0.00	1 year shelf life
A	25	Level Gauge - Saturator Tank	John C Ernest / John C Ernest	441-04-12CC-505-VIT-839A	1	Yes	No	$0.00	Used For 02-LI-129/229/329
A	26	PCV, 1/2"-Saturator Air Supply	SMC / SMC	AR40-N04G-Z-B	1	Yes	No	$0.00	Used for 02-PCV-131/231/331
A	27	PSV, 1/2"x3/4" - Saturator Tank	Emerson / Emerson	6010DCM01-KM0120	1	Yes	No	$0.00	Used for 02-PSV-127/227/327
B	28	PSV, 6"x6", Pilot Operated Angle Valve - Backwash Supply	Cla-Val / Summit	50-01 (100-01 w/ CRL-60 Pilot)	1	Yes	No	$0.00	Used for 03-PSV-195
Notes:		If additional spare parts are required, please provide the project number, quantity and spare part number in an e-mail to spareparts@awcsoltuions.com.							

Phone : 604-936-4217
www.awcsolutions.com

PROJECT NAME: WRANGELL WTP
PROJECT NUMBER: 17805
DOCUMENT NO.: 17805-IC-NET-001
REVISION: ISSUED FOR REVIEW
DOCUMENT NAME: NETWORK DIAGRAM

THIS DRAWING IS THE PROPERTY OF AWC SOLUTIONS AND CONTAINS PROPRIETARY AND CONFIDENTIAL INFORMATION WHICH MUST NOT BE DUPLICATED, USED OR DISCLOSED OTHER THAN EXPRESSLY AUTHORIZED BY AWC WATER SOLUTIONS LTD

TO CLIENT SCADA
IP:XXX.XXX.X.XXX

TO CLIENT NETWORK (WAN OR INTERNET CONNECTION REQUIRED)
IP:XXX.XXX.X.XXX

COMM-ES002-1
*NOTE 1, 3, 4

COMM-ES001-1
*NOTE 1, 2

02-LCP-001 MAIN CONTROL PANEL

02-ES-001
COMMUNICATION
GATEWAY
IP: 192.168.1.100
WAN
1 2 3 4

ALLEN BRADLEY 15"
HMI-001
IP:192.168.1.105

1769-L33ER PLC
RACK 1, SLOT 0
IP:192.168.1.101

COMM-HMI001
CAT5e SHIELDED

COMM-PLC001
CAT5e SHIELDED

COMM-RACK001
CAT5e SHIELDED

COMM-ES001-2
CAT5e SHIELDED

02-NS-001
WEIDMULLER
IE-SW-EL8-8TX
5 6 7 8
1 2 3 4

17??-AENT
RACK 2
IP:192.168.1.102

COMPACTLOGIX SYSTEM
IO CARDS

COMM-03RCP101
*NOTE 1

COMM-03RCP201
*NOTE 1

03-RCP-101 FILTER TRAIN #1 REMOTE IO PANEL

03-NS-101
WEIDMULLER
IE-SW-EL5-5TX
5 4 3
1 2

17??-AENT
RACK 2, SLOT 0
IP:192.168.1.103

IO CARDS

COMM-RACK101
CAT5e SHIELDED

03-RCP-201 FILTER TRAIN #2 REMOTE IO PANEL

COMM-RACK201
CAT5e SHIELDED

03-NS-201
WEIDMULLER
IE-SW-EL5-5TX
1 2
5 4 3

17??-AENT
RACK 2, SLOT 0
IP:192.168.1.104

IO CARDS

NOTES:

1. SHIELDED ETHERNET CABLE SUPPLIED AND INSTALLED BY OTHERS.
2. EXTERNAL ETHERNET CONNECTION TO UTILIZE THE WIDE AREA NETWORK PORT ON GATEWAY.
3. CLIENT TO ENSURE NO IP ADDRESS CONFLICT BETWEEN CLIENT LOCAL NETWORK FOR SCADA AND AWC NETWORK DEVICES.
4. EXTERNAL COMMUNICATION WITH VFD'S, INSTRUMENTATION, ETC. TO BE PROVIDED VIA PLANT SCADA GATEWAY

ENGINEER'S SEAL

REV	DESCRIPTION	DATE	DFT	CHK	APP
A	ISSUED FOR REVIEW	19-JAN-23	GB	TB	CW

REVISIONS

9087A 198 Street Langley, BC Canada V1M 3B1
Phone : 604-936-4217
www.awcsolutions.com

THIS DRAWING IS THE PROPERTY OF AWC AND CONTAINS PROPRIETARY AND CONFIDENTIAL INFORMATION WHICH MUST NOT BE DUPLICATED, USED OR DISCLOSED OTHER THAN EXPRESSLY AUTHORIZED BY AWC.

CLIENT: CITY & BOROUGH OF WRANGELL
PROJECT: WRANGELL WTP
TITLE: NETWORK DIAGRAM
SCALE: NTS | PROJECTION | DEFAULT UNITS: INCH | SHEET SIZE: 17X11 | SHEET: 1 OF 1
DRAWING NO.: 17805-IC-NET-001-01 | REV: A

Phone : 604-936-4217
www.awcsolutions.com

PROJECT NAME: WRANGELL WTP
PROJECT NUMBER: 17805
DOCUMENT NO.: 17805-IC-SCD-201
REVISION: ISSUED FOR CONSTRUCTION
DOCUMENT NAME: INSTRUMENTATION SCHEMATIC DIAGRAM 03-RCP-201

THIS DRAWING IS THE PROPERTY OF AWC SOLUTIONS AND CONTAINS PROPRIETARY AND CONFIDENTIAL INFORMATION WHICH MUST NOT BE DUPLICATED, USED OR DISCLOSED OTHER THAN EXPRESSLY AUTHORIZED BY AWC WATER SOLUTIONS LTD

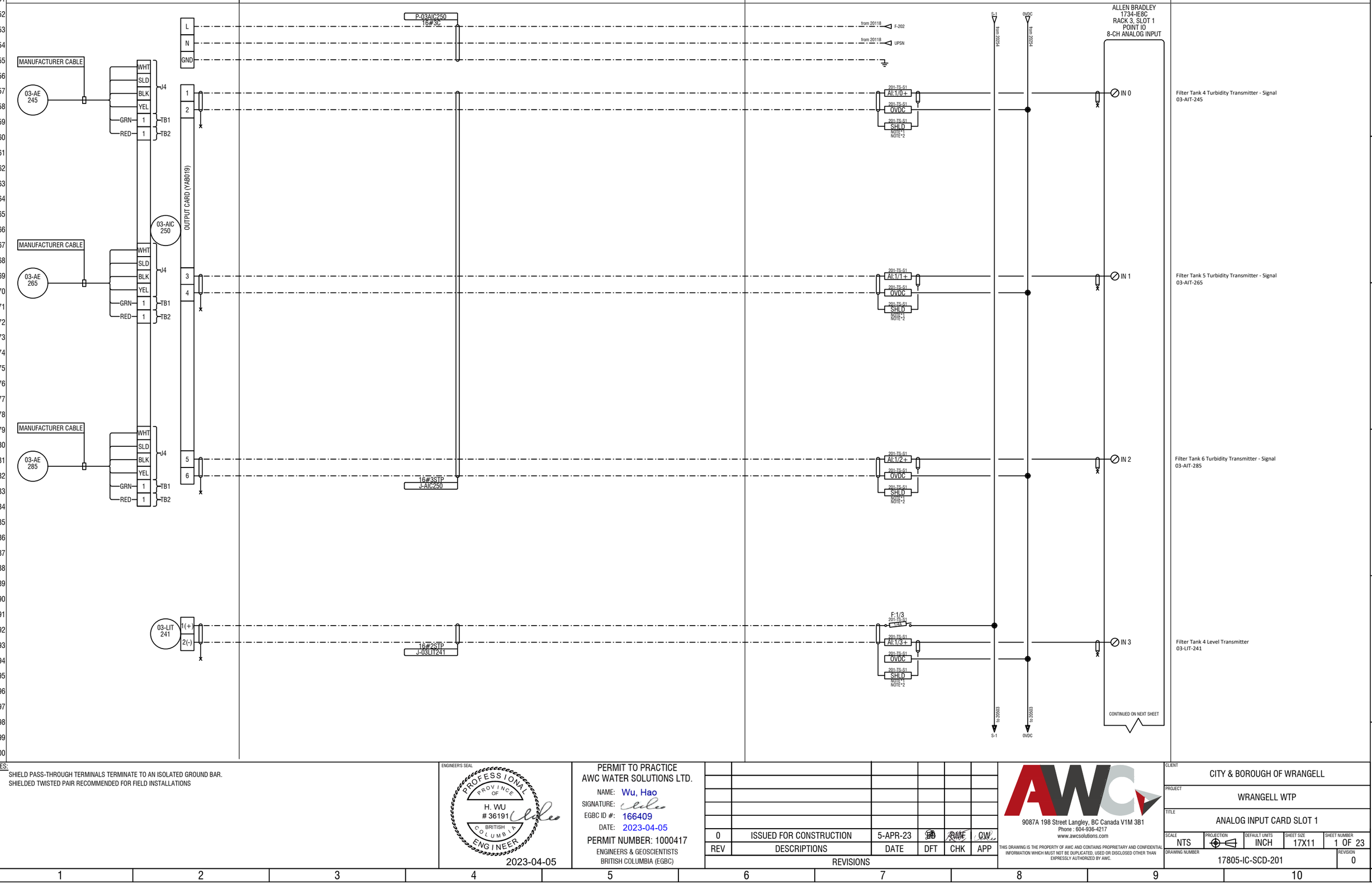

NOTES:
1. SHIELD PASS-THROUGH TERMINALS TERMINATE TO AN ISOLATED GROUND BAR.
2. SHIELDED TWISTED PAIR RECOMMENDED FOR FIELD INSTALLATIONS

ENGINEER'S SEAL
PROFESSIONAL ENGINEER
PROVINCE OF BRITISH COLUMBIA
H. WU
36191
2023-04-05

PERMIT TO PRACTICE
AWC WATER SOLUTIONS LTD.
NAME: Wu, Hao
SIGNATURE:
EGBC ID #: 166409
DATE: 2023-04-05
PERMIT NUMBER: 1000417
ENGINEERS & GEOSCIENTISTS
BRITISH COLUMBIA (EGBC)

REV	DESCRIPTIONS	DATE	DFT	CHK	APP
0	ISSUED FOR CONSTRUCTION	5-APR-23	BB	RWF	CW

REVISIONS

AWC
9087A 198 Street Langley, BC Canada V1M 3B1
Phone : 604-936-4217
www.awcsolutions.com

THIS DRAWING IS THE PROPERTY OF AWC AND CONTAINS PROPRIETARY AND CONFIDENTIAL INFORMATION WHICH MUST NOT BE DUPLICATED, USED OR DISCLOSED OTHER THAN EXPRESSLY AUTHORIZED BY AWC.

CLIENT: CITY & BOROUGH OF WRANGELL
PROJECT: WRANGELL WTP
TITLE: ANALOG INPUT CARD SLOT 1

SCALE	PROJECTION	DEFAULT UNITS	SHEET SIZE	SHEET NUMBER
NTS		INCH	17X11	1 OF 23

DRAWING NUMBER: 17805-IC-SCD-201
REVISION: 0

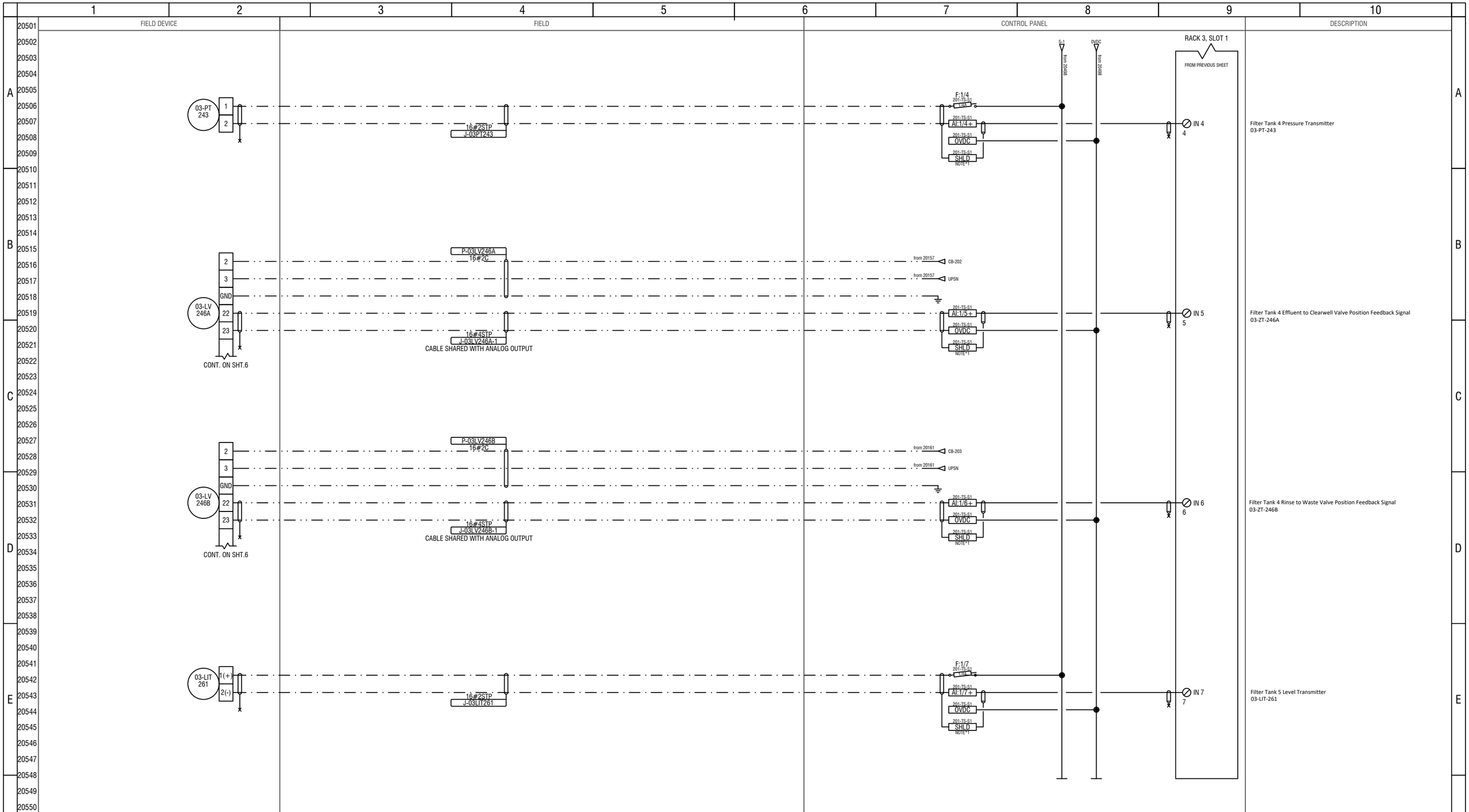

ENGINEER'S SEAL

PROFESSIONAL ENGINEER — PROVINCE OF BRITISH COLUMBIA — H. WU # 36191

2023-04-05

PERMIT TO PRACTICE
AWC WATER SOLUTIONS LTD.

NAME: Wu, Hao
SIGNATURE:
EGBC ID #: 166409
DATE: 2023-04-05

PERMIT NUMBER: 1000417
ENGINEERS & GEOSCIENTISTS
BRITISH COLUMBIA (EGBC)

REV	DESCRIPTIONS	DATE	DFT	CHK	APP
0	ISSUED FOR CONSTRUCTION	5-APR-23	[illegible]	RMF	CW

REVISIONS

9087A 198 Street Langley, BC Canada V1M 3B1
Phone : 604-936-4217
www.awcsolutions.com

THIS DRAWING IS THE PROPERTY OF AWC AND CONTAINS PROPRIETARY AND CONFIDENTIAL INFORMATION WHICH MUST NOT BE DUPLICATED, USED OR DISCLOSED OTHER THAN EXPRESSLY AUTHORIZED BY AWC.

CLIENT: CITY & BOROUGH OF WRANGELL

PROJECT: WRANGELL WTP

TITLE: ANALOG INPUT CARD SLOT1

SCALE	PROJECTION	DEFAULT UNITS	SHEET SIZE	SHEET NUMBER
NTS		INCH	17X11	2 OF 23

DRAWING NUMBER: 17805-IC-SCD-201

REVISION: 0

FIELD DEVICE	FIELD	CONTROL PANEL	DESCRIPTION

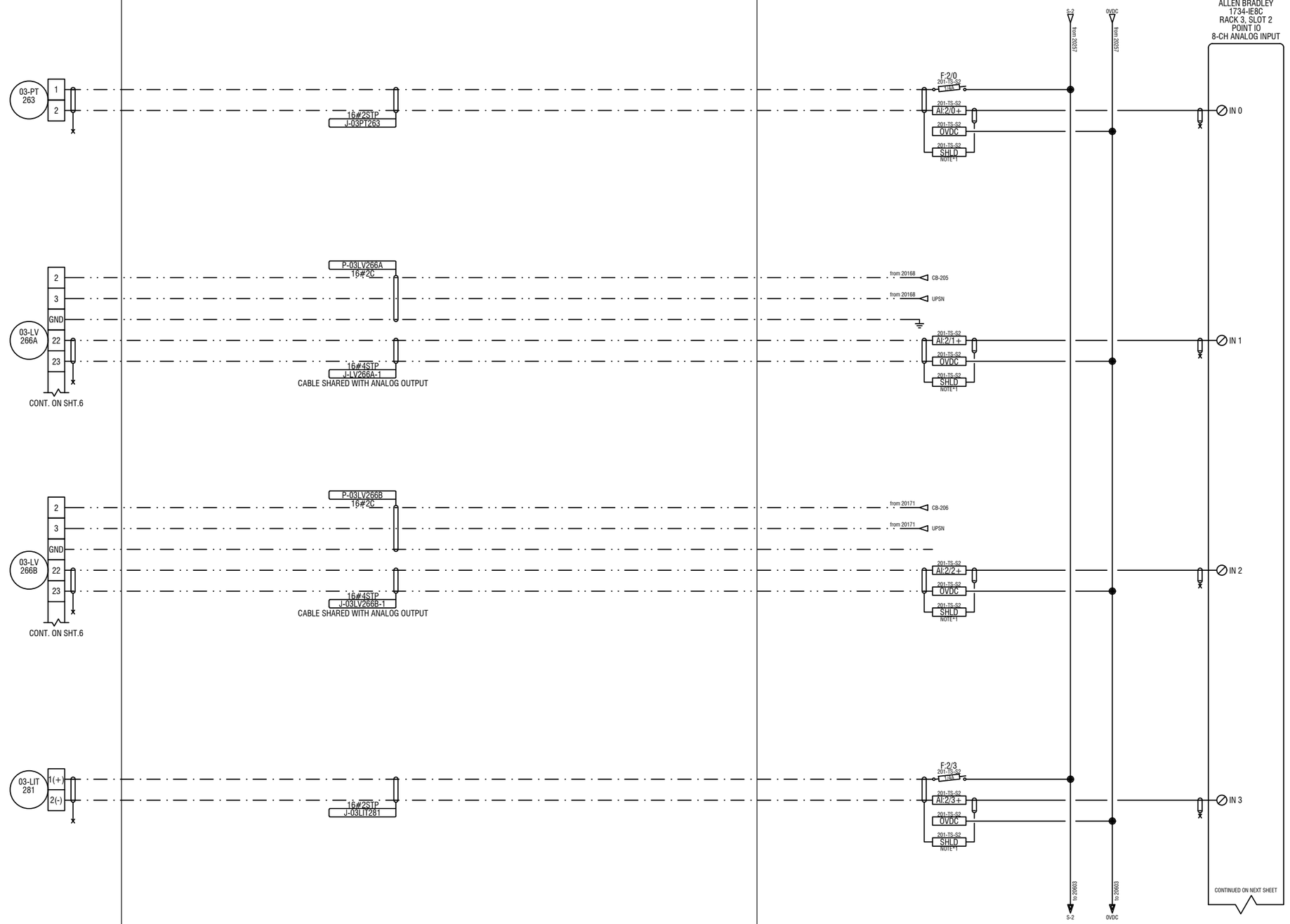

ENGINEER'S SEAL

PROFESSIONAL ENGINEER — PROVINCE OF BRITISH COLUMBIA — H. WU # 36191

2023-04-05

PERMIT TO PRACTICE
AWC WATER SOLUTIONS LTD.
NAME: Wu, Hao
SIGNATURE:
EGBC ID #: 166409
DATE: 2023-04-05
PERMIT NUMBER: 1000417
ENGINEERS & GEOSCIENTISTS
BRITISH COLUMBIA (EGBC)

REV	DESCRIPTIONS	DATE	DFT	CHK	APP
0	ISSUED FOR CONSTRUCTION	5-APR-23	HB	RMF	CW

REVISIONS

9087A 198 Street Langley, BC Canada V1M 3B1
Phone : 604-936-4217
www.awcsolutions.com

THIS DRAWING IS THE PROPERTY OF AWC AND CONTAINS PROPRIETARY AND CONFIDENTIAL INFORMATION WHICH MUST NOT BE DUPLICATED, USED OR DISCLOSED OTHER THAN EXPRESSLY AUTHORIZED BY AWC.

CLIENT: CITY & BOROUGH OF WRANGELL

PROJECT: WRANGELL WTP

TITLE: ANALOG INPUT CARD SLOT 2

SCALE	PROJECTION	DEFAULT UNITS	SHEET SIZE	SHEET NUMBER
NTS		INCH	17X11	3 OF 23

DRAWING NUMBER: 17805-IC-SCD-201

REVISION: 0

FIELD DEVICE	FIELD	CONTROL PANEL	DESCRIPTION

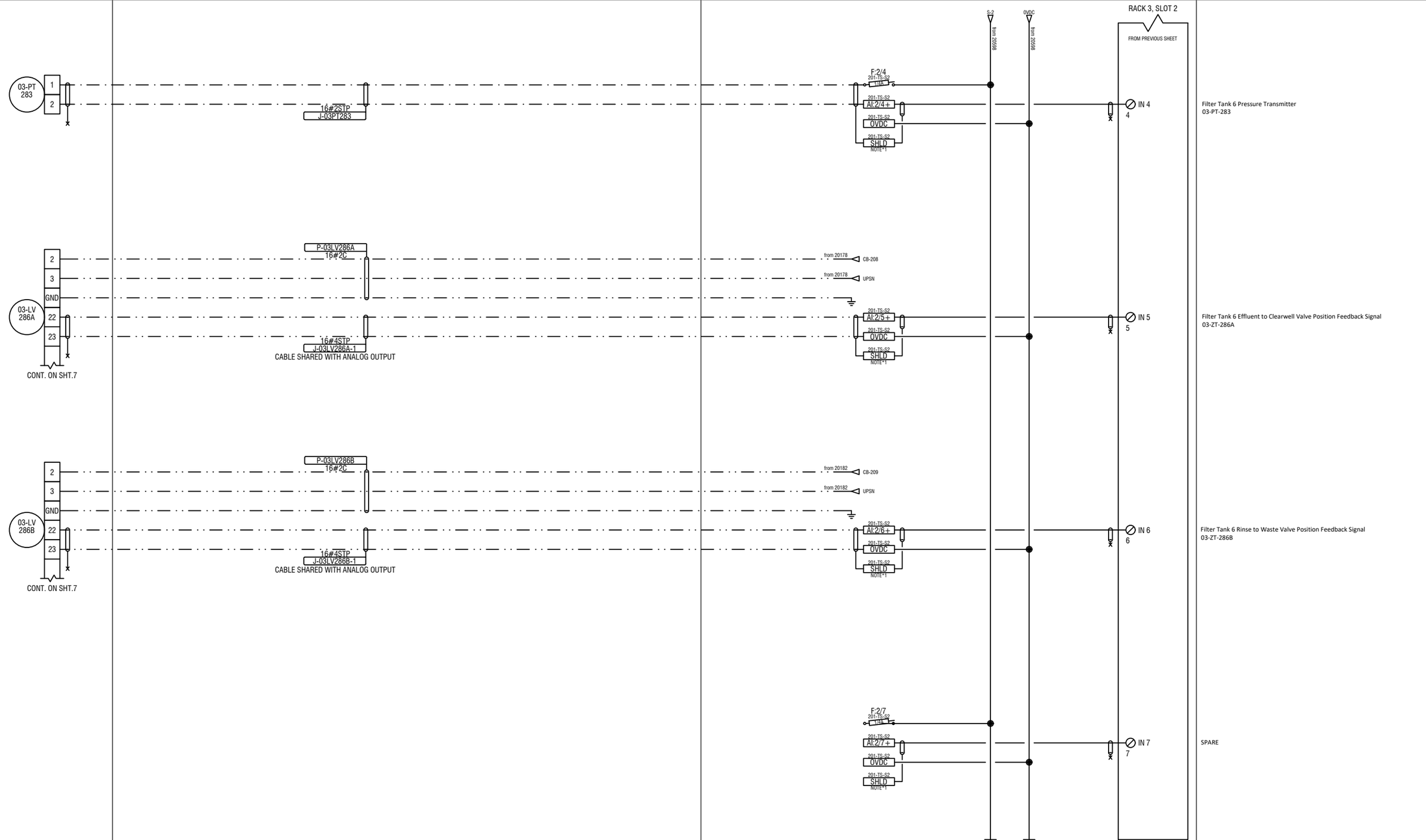

ENGINEER'S SEAL

PROFESSIONAL ENGINEER — PROVINCE OF BRITISH COLUMBIA — H. WU # 36191

2023-04-05

PERMIT TO PRACTICE
AWC WATER SOLUTIONS LTD.
NAME: Wu, Hao
SIGNATURE:
EGBC ID #: 166409
DATE: 2023-04-05
PERMIT NUMBER: 1000417
ENGINEERS & GEOSCIENTISTS
BRITISH COLUMBIA (EGBC)

REV	DESCRIPTIONS	DATE	DFT	CHK	APP
0	ISSUED FOR CONSTRUCTION	5-APR-23	PB	RWF	CW

REVISIONS

9087A 198 Street Langley, BC Canada V1M 3B1
Phone : 604-936-4217
www.awcsolutions.com

THIS DRAWING IS THE PROPERTY OF AWC AND CONTAINS PROPRIETARY AND CONFIDENTIAL INFORMATION WHICH MUST NOT BE DUPLICATED, USED OR DISCLOSED OTHER THAN EXPRESSLY AUTHORIZED BY AWC.

CLIENT: CITY & BOROUGH OF WRANGELL

PROJECT: WRANGELL WTP

TITLE: ANALOG INPUT CARD SLOT 2

SCALE	PROJECTION	DEFAULT UNITS	SHEET SIZE	SHEET NUMBER
NTS		INCH	17X11	4 OF 23

DRAWING NUMBER: 17805-IC-SCD-201

REVISION: 0

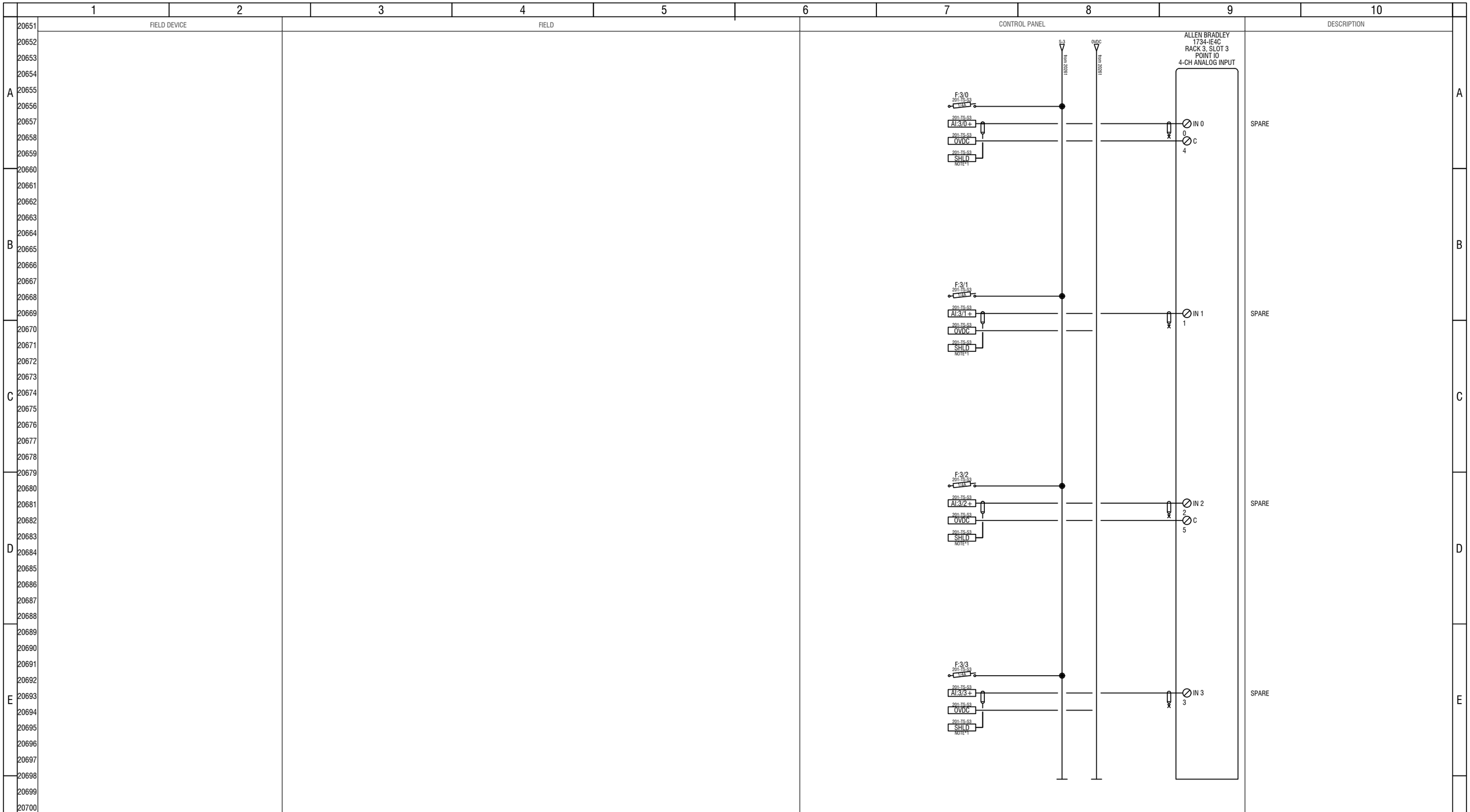

ENGINEER'S SEAL

PROFESSIONAL ENGINEER
PROVINCE OF BRITISH COLUMBIA
H. WU
36191

2023-04-05

PERMIT TO PRACTICE
AWC WATER SOLUTIONS LTD.

NAME: Wu, Hao
SIGNATURE:
EGBC ID #: 166409
DATE: 2023-04-05

PERMIT NUMBER: 1000417
ENGINEERS & GEOSCIENTISTS
BRITISH COLUMBIA (EGBC)

REV	DESCRIPTIONS	DATE	DFT	CHK	APP
0	ISSUED FOR CONSTRUCTION	5-APR-23	[illegible]	RMF	CW

REVISIONS

9087A 198 Street Langley, BC Canada V1M 3B1
Phone : 604-936-4217
www.awcsolutions.com

THIS DRAWING IS THE PROPERTY OF AWC AND CONTAINS PROPRIETARY AND CONFIDENTIAL INFORMATION WHICH MUST NOT BE DUPLICATED, USED OR DISCLOSED OTHER THAN EXPRESSLY AUTHORIZED BY AWC.

CLIENT: CITY & BOROUGH OF WRANGELL
PROJECT: WRANGELL WTP
TITLE: ANALOG INPUT CARD SLOT 3

SCALE	PROJECTION	DEFAULT UNITS	SHEET SIZE	SHEET NUMBER
NTS		INCH	17X11	5 OF 23

DRAWING NUMBER: 17805-IC-SCD-201
REVISION: 0

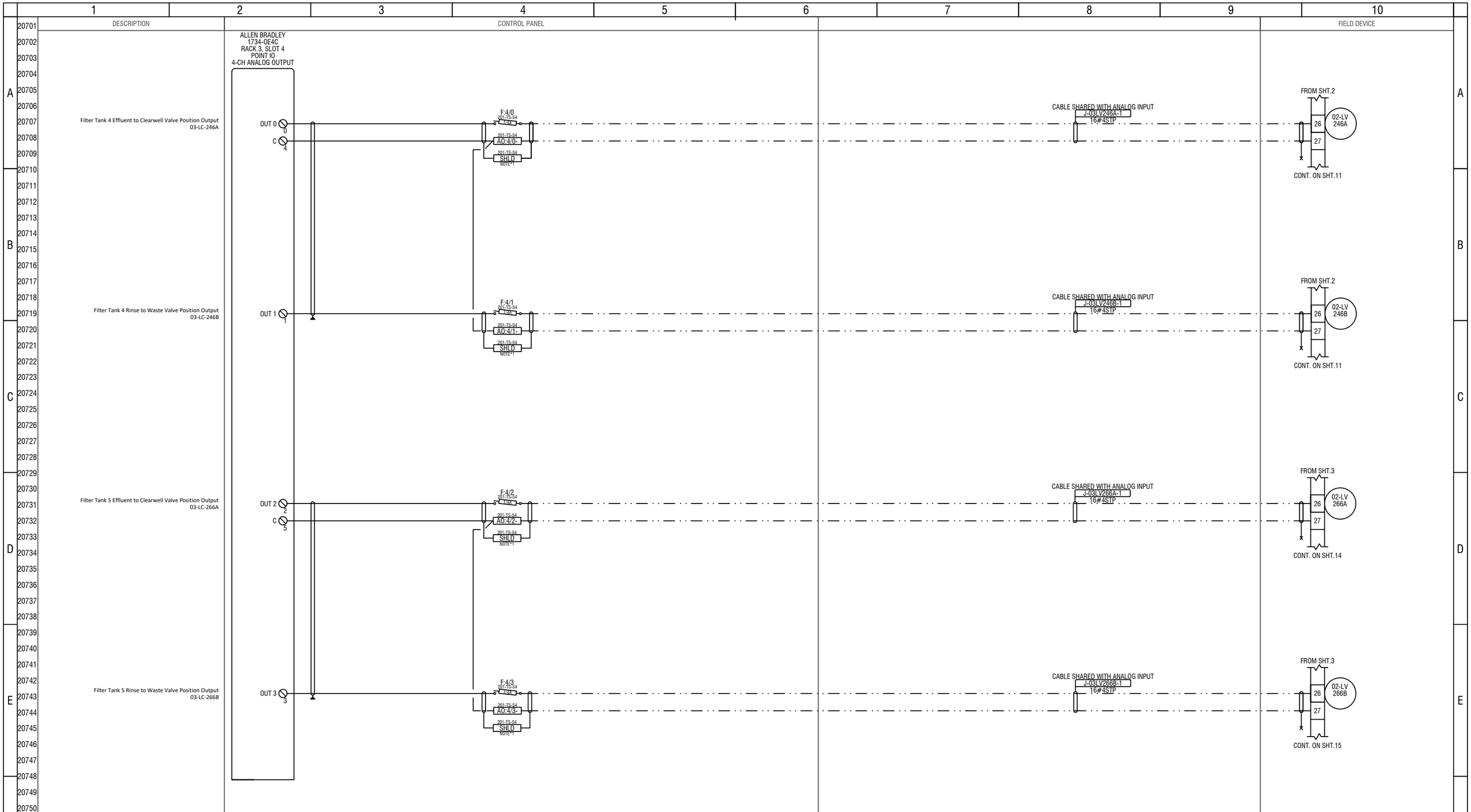

ENGINEER'S SEAL

PROFESSIONAL ENGINEER
PROVINCE OF BRITISH COLUMBIA
H. WU
36191

2023-04-05

PERMIT TO PRACTICE
AWC WATER SOLUTIONS LTD.

NAME: Wu, Hao
SIGNATURE:
EGBC ID #: 166409
DATE: 2023-04-05

PERMIT NUMBER: 1000417
ENGINEERS & GEOSCIENTISTS
BRITISH COLUMBIA (EGBC)

REV	DESCRIPTIONS	DATE	DFT	CHK	APP
0	ISSUED FOR CONSTRUCTION	5-APR-23	HB	RMF	CW

REVISIONS

9087A 198 Street Langley, BC Canada V1M 3B1
Phone : 604-936-4217
www.awcsolutions.com

THIS DRAWING IS THE PROPERTY OF AWC AND CONTAINS PROPRIETARY AND CONFIDENTIAL INFORMATION WHICH MUST NOT BE DUPLICATED, USED OR DISCLOSED OTHER THAN EXPRESSLY AUTHORIZED BY AWC.

CLIENT: CITY & BOROUGH OF WRANGELL
PROJECT: WRANGELL WTP
TITLE: ANALOG OUTPUT CARD SLOT 4

SCALE	PROJECTION	DEFAULT UNITS	SHEET SIZE	SHEET NUMBER
NTS		INCH	17X11	6 OF 23

DRAWING NUMBER: 17805-IC-SCD-201
REVISION: 0

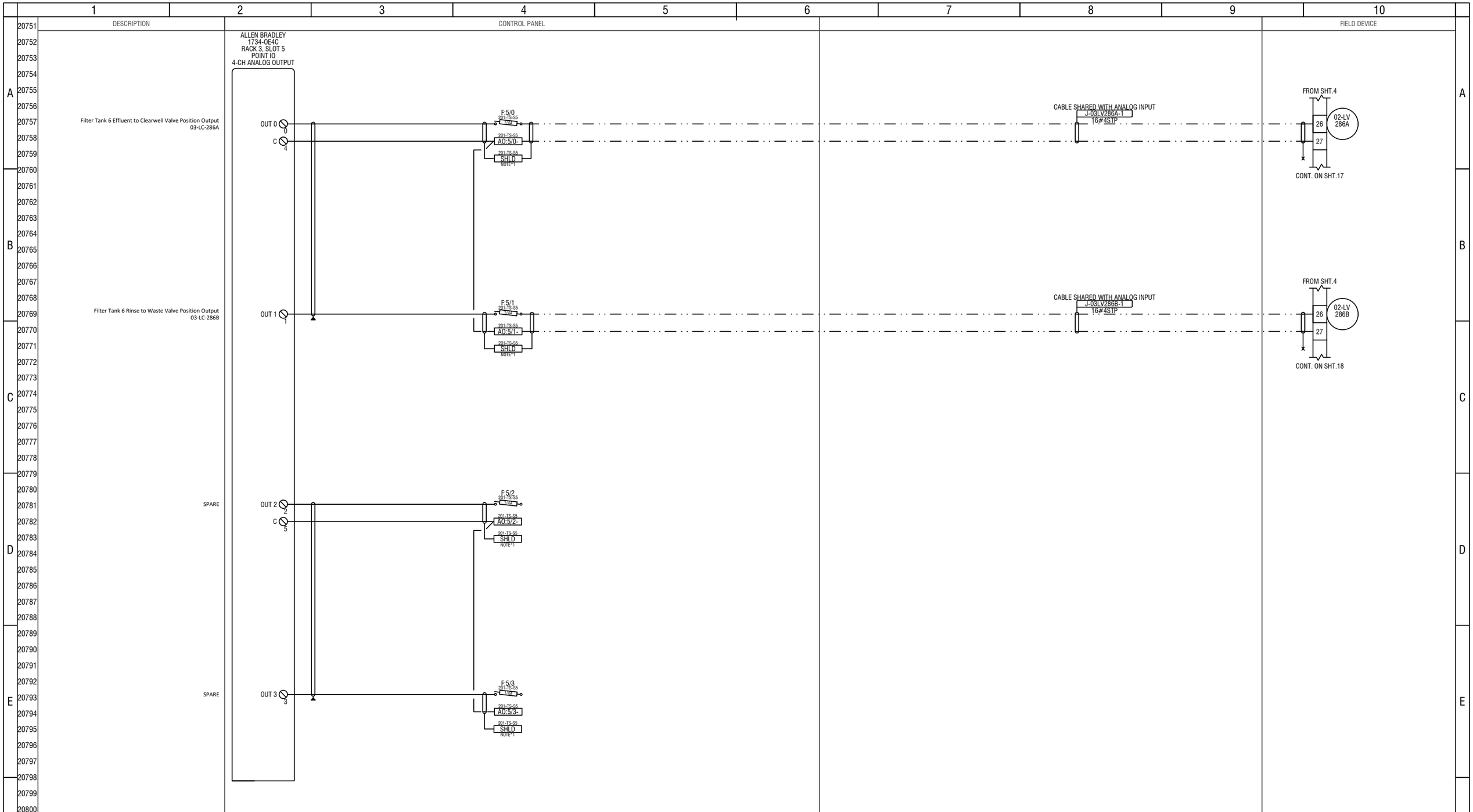

ENGINEER'S SEAL

PROFESSIONAL ENGINEER
PROVINCE OF BRITISH COLUMBIA
H. WU
36191

2023-04-05

PERMIT TO PRACTICE
AWC WATER SOLUTIONS LTD.

NAME: Wu, Hao
SIGNATURE:
EGBC ID #: 166409
DATE: 2023-04-05

PERMIT NUMBER: 1000417
ENGINEERS & GEOSCIENTISTS
BRITISH COLUMBIA (EGBC)

REV	DESCRIPTIONS	DATE	DFT	CHK	APP
0	ISSUED FOR CONSTRUCTION	5-APR-23	[illegible]	RMF	CW

REVISIONS

9087A 198 Street Langley, BC Canada V1M 3B1
Phone : 604-936-4217
www.awcsolutions.com

THIS DRAWING IS THE PROPERTY OF AWC AND CONTAINS PROPRIETARY AND CONFIDENTIAL INFORMATION WHICH MUST NOT BE DUPLICATED, USED OR DISCLOSED OTHER THAN EXPRESSLY AUTHORIZED BY AWC.

CLIENT: CITY & BOROUGH OF WRANGELL
PROJECT: WRANGELL WTP
TITLE: ANALOG OUTPUT CARD SLOT 5

SCALE	PROJECTION	DEFAULT UNITS	SHEET SIZE	SHEET NUMBER
NTS		INCH	17X11	7 OF 23

DRAWING NUMBER: 17805-IC-SCD-201
REVISION: 0

FIELD DEVICE	FIELD	CONTROL PANEL	DESCRIPTION

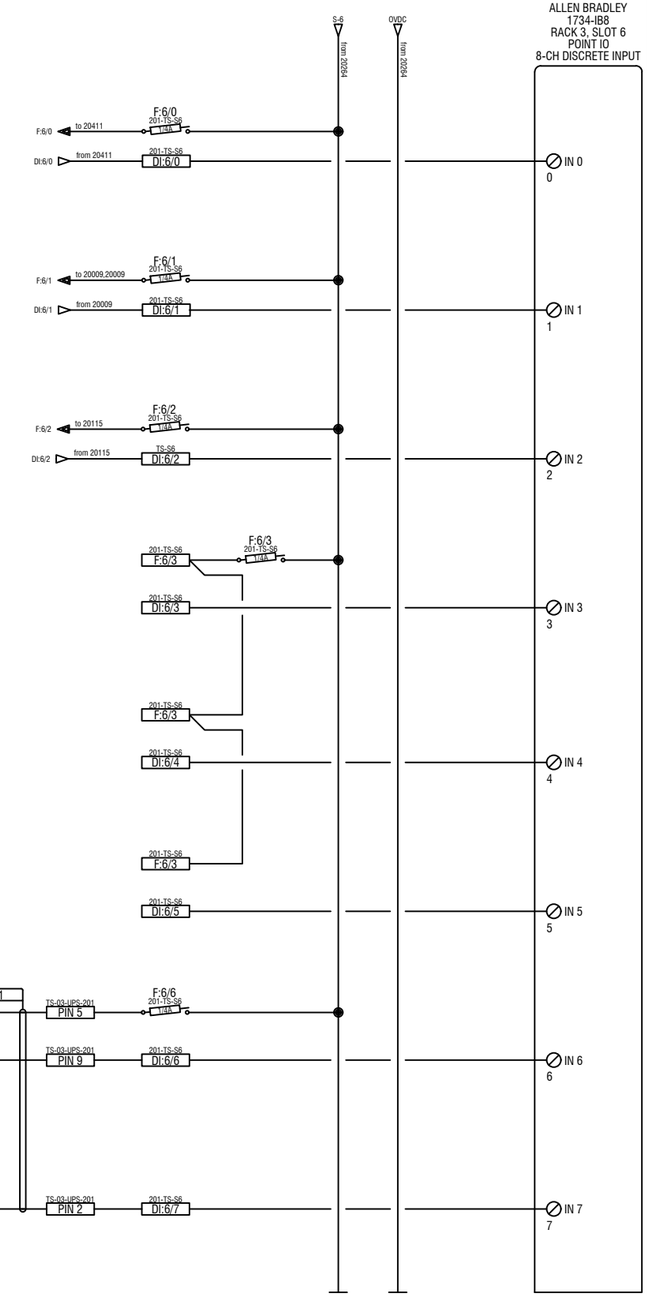

ENGINEER'S SEAL

PROFESSIONAL ENGINEER
PROVINCE OF BRITISH COLUMBIA
H. WU
36191
2023-04-05

PERMIT TO PRACTICE
AWC WATER SOLUTIONS LTD.
NAME: Wu, Hao
SIGNATURE:
EGBC ID #: 166409
DATE: 2023-04-05
PERMIT NUMBER: 1000417
ENGINEERS & GEOSCIENTISTS
BRITISH COLUMBIA (EGBC)

REV	DESCRIPTIONS	DATE	DFT	CHK	APP
0	ISSUED FOR CONSTRUCTION	5-APR-23	DB	RME	CW

REVISIONS

9087A 198 Street Langley, BC Canada V1M 3B1
Phone : 604-936-4217
www.awcsolutions.com

THIS DRAWING IS THE PROPERTY OF AWC AND CONTAINS PROPRIETARY AND CONFIDENTIAL INFORMATION WHICH MUST NOT BE DUPLICATED, USED OR DISCLOSED OTHER THAN EXPRESSLY AUTHORIZED BY AWC.

CLIENT: CITY & BOROUGH OF WRANGELL
PROJECT: WRANGELL WTP
TITLE: DIGITAL INPUT CARD SLOT 6

SCALE	PROJECTION	DEFAULT UNITS	SHEET SIZE	SHEET NUMBER
NTS		INCH	17X11	8 OF 23

DRAWING NUMBER: 17805-IC-SCD-201
REVISION: 0

FIELD DEVICE | FIELD | CONTROL PANEL | DESCRIPTION

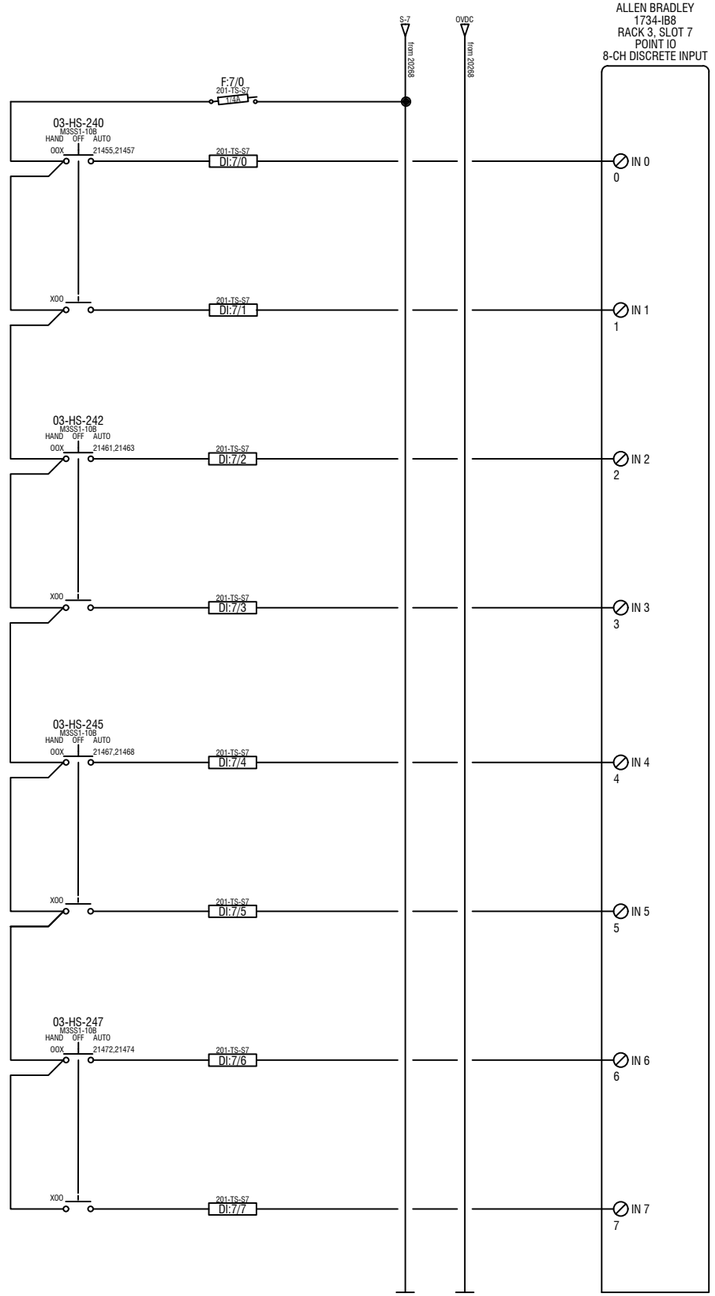

Filter Tank 4 Inlet Valve HOA Switch - Auto
03-XHS-240A

Filter Tank 4 Inlet Valve HOA Switch - Hand
03-XHS-240B

Filter Tank 4 Air Scour Valve HOA Switch - Auto
03-XHS-242A

Filter Tank 4 Air Scour Valve HOA Switch - Hand
03-XHS-242B

Filter Tank 4 Turbidity Sample Solenoid Valve - Auto
03-AHS-245A

Filter Tank 4 Turbidity Sample Solenoid Valve - Hand
03-AHS-245B

Filter Tank 4 Backwash Supply Valve HOA Switch - Auto
03-AHS-247A

Filter Tank 14Backwash Supply Valve HOA Switch - Hand
03-AHS-247B

ENGINEER'S SEAL
PROFESSIONAL ENGINEER
PROVINCE OF BRITISH COLUMBIA
H. WU
36191
2023-04-05

PERMIT TO PRACTICE
AWC WATER SOLUTIONS LTD.
NAME: Wu, Hao
SIGNATURE:
EGBC ID #: 166409
DATE: 2023-04-05
PERMIT NUMBER: 1000417
ENGINEERS & GEOSCIENTISTS
BRITISH COLUMBIA (EGBC)

REV	DESCRIPTIONS	DATE	DFT	CHK	APP
0	ISSUED FOR CONSTRUCTION	5-APR-23	SB	RWE	CW

REVISIONS

9087A 198 Street Langley, BC Canada V1M 3B1
Phone : 604-936-4217
www.awcsolutions.com

THIS DRAWING IS THE PROPERTY OF AWC AND CONTAINS PROPRIETARY AND CONFIDENTIAL INFORMATION WHICH MUST NOT BE DUPLICATED, USED OR DISCLOSED OTHER THAN EXPRESSLY AUTHORIZED BY AWC.

CLIENT: CITY & BOROUGH OF WRANGELL
PROJECT: WRANGELL WTP
TITLE: DIGITAL INPUT CARD SLOT 7

SCALE	PROJECTION	DEFAULT UNITS	SHEET SIZE	SHEET NUMBER
NTS		INCH	17X11	9 OF 23

DRAWING NUMBER: 17805-IC-SCD-201
REVISION: 0

FIELD DEVICE	FIELD	CONTROL PANEL	DESCRIPTION

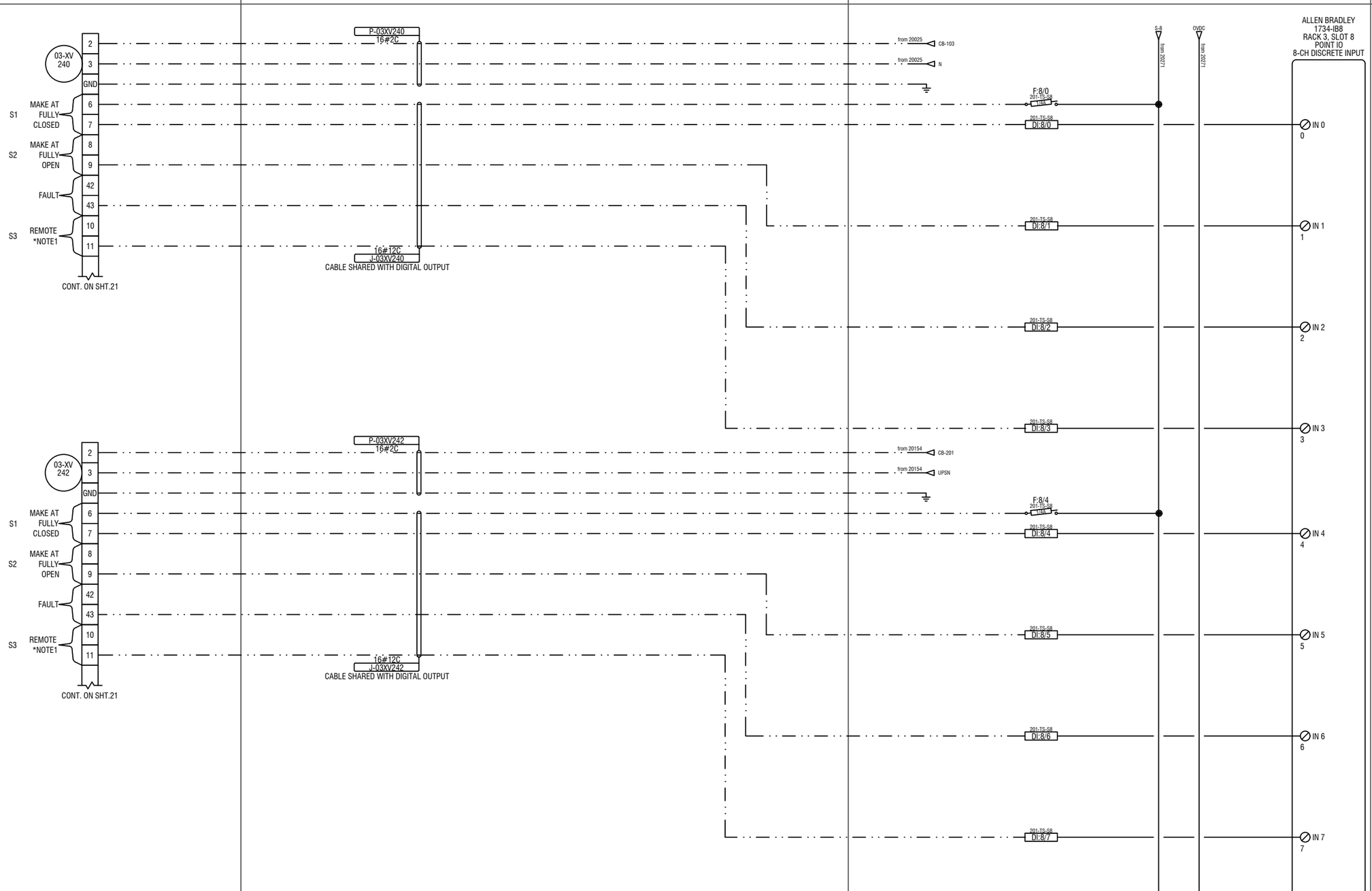

Filter Tank 4 Inlet Valve Position Switch Closed
03-XSC-240

Filter Tank 4 Inlet Valve Position Switch Open
03-XSO-240

Filter Tank 4 Inlet Valve Fault Signal
03-XS-240

Filter Tank 4 Inlet Valve Local/Remote Switch
03-XHS-240C

Filter Tank 4 Air Scour Valve Position Switch Closed
03-XSC-242

Filter Tank 4 Air Scour Valve Position Switch Open
03-XSO-242

Filter Tank 4 Air Scour Valve Fault Signal
03-XS-242

Filter Tank 4 Air Scour Valve Local/Remote Switch
03-XHS-242C

NOTES:
1. PROGRAM CONTACT S3 (TERMINAL10,11) FOR LOCAL REMOTE STATUS

ENGINEER'S SEAL
PROFESSIONAL ENGINEER
PROVINCE OF BRITISH COLUMBIA
H. WU
36191
2023-04-05

PERMIT TO PRACTICE
AWC WATER SOLUTIONS LTD.
NAME: Wu, Hao
SIGNATURE:
EGBC ID #: 166409
DATE: 2023-04-05
PERMIT NUMBER: 1000417
ENGINEERS & GEOSCIENTISTS
BRITISH COLUMBIA (EGBC)

REV	DESCRIPTIONS	DATE	DFT	CHK	APP
0	ISSUED FOR CONSTRUCTION	5-APR-23	PB	PWF	CW

REVISIONS

9087A 198 Street Langley, BC Canada V1M 3B1
Phone : 604-936-4217
www.awcsolutions.com

THIS DRAWING IS THE PROPERTY OF AWC AND CONTAINS PROPRIETARY AND CONFIDENTIAL INFORMATION WHICH MUST NOT BE DUPLICATED, USED OR DISCLOSED OTHER THAN EXPRESSLY AUTHORIZED BY AWC.

CLIENT: CITY & BOROUGH OF WRANGELL
PROJECT: WRANGELL WTP
TITLE: DIGITAL INPUT CARD SLOT 8

SCALE	PROJECTION	DEFAULT UNITS	SHEET SIZE	SHEET NUMBER
NTS		INCH	17X11	10 OF 23

DRAWING NUMBER: 17805-IC-SCD-201
REVISION: 0

NOTES:
1. PROGRAM CONTACT S3 (TERMINAL10,11) FOR LOCAL REMOTE STATUS

ENGINEER'S SEAL
PROFESSIONAL ENGINEER
PROVINCE OF BRITISH COLUMBIA
H. WU
36191
2023-04-05

PERMIT TO PRACTICE
AWC WATER SOLUTIONS LTD.
NAME: Wu, Hao
SIGNATURE:
EGBC ID #: 166409
DATE: 2023-04-05
PERMIT NUMBER: 1000417
ENGINEERS & GEOSCIENTISTS
BRITISH COLUMBIA (EGBC)

REV	DESCRIPTIONS	DATE	DFT	CHK	APP
0	ISSUED FOR CONSTRUCTION	5-APR-23	EB	RMF	CW

REVISIONS

AWC
9087A 198 Street Langley, BC Canada V1M 3B1
Phone : 604-936-4217
www.awcsolutions.com

THIS DRAWING IS THE PROPERTY OF AWC AND CONTAINS PROPRIETARY AND CONFIDENTIAL INFORMATION WHICH MUST NOT BE DUPLICATED, USED OR DISCLOSED OTHER THAN EXPRESSLY AUTHORIZED BY AWC.

CLIENT: CITY & BOROUGH OF WRANGELL
PROJECT: WRANGELL WTP
TITLE: DIGITAL INPUT CARD SLOT 9

SCALE	PROJECTION	DEFAULT UNITS	SHEET SIZE	SHEET NUMBER
NTS		INCH	17X11	11 OF 23

DRAWING NUMBER: 17805-IC-SCD-201
REVISION: 0

FIELD DEVICE	FIELD	CONTROL PANEL	DESCRIPTION

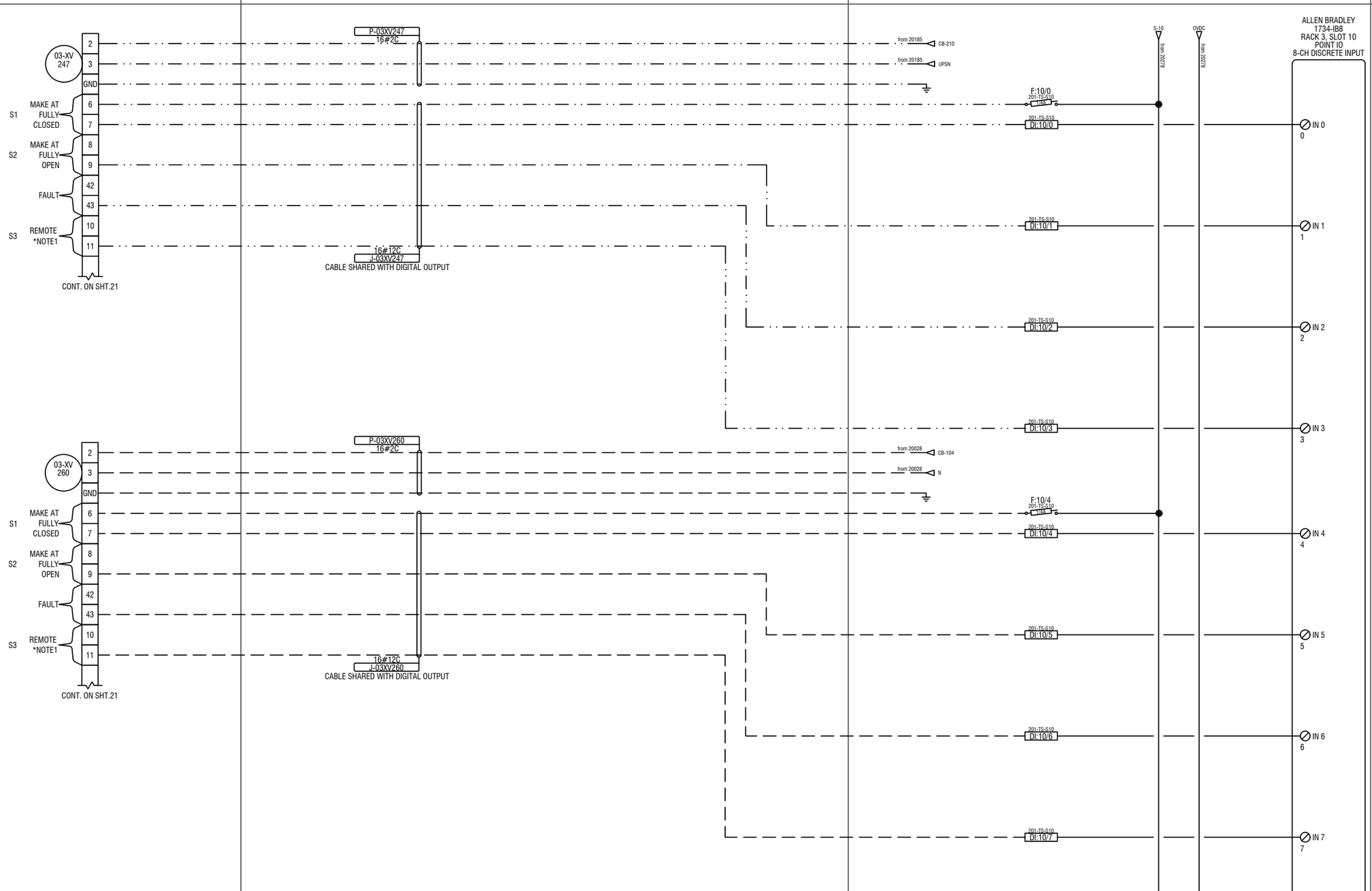

NOTES:
1. PROGRAM CONTACT S3 (TERMINAL10,11) FOR LOCAL REMOTE STATUS

ENGINEER'S SEAL
PROFESSIONAL ENGINEER
PROVINCE OF BRITISH COLUMBIA
H. WU
36191
2023-04-05

PERMIT TO PRACTICE
AWC WATER SOLUTIONS LTD.
NAME: Wu, Hao
SIGNATURE:
EGBC ID #: 166409
DATE: 2023-04-05
PERMIT NUMBER: 1000417
ENGINEERS & GEOSCIENTISTS
BRITISH COLUMBIA (EGBC)

REV	DESCRIPTIONS	DATE	DFT	CHK	APP
0	ISSUED FOR CONSTRUCTION	5-APR-23	BB	RMF	CW

REVISIONS

AWC
9087A 198 Street Langley, BC Canada V1M 3B1
Phone : 604-936-4217
www.awcsolutions.com

THIS DRAWING IS THE PROPERTY OF AWC AND CONTAINS PROPRIETARY AND CONFIDENTIAL INFORMATION WHICH MUST NOT BE DUPLICATED, USED OR DISCLOSED OTHER THAN EXPRESSLY AUTHORIZED BY AWC.

CLIENT: CITY & BOROUGH OF WRANGELL
PROJECT: WRANGELL WTP
TITLE: DIGITAL INPUT CARD SLOT 10

SCALE	PROJECTION	DEFAULT UNITS	SHEET SIZE	SHEET NUMBER
NTS		INCH	17X11	12 OF 23

DRAWING NUMBER: 17805-IC-SCD-201
REVISION: 0

FIELD DEVICE	FIELD	CONTROL PANEL	DESCRIPTION

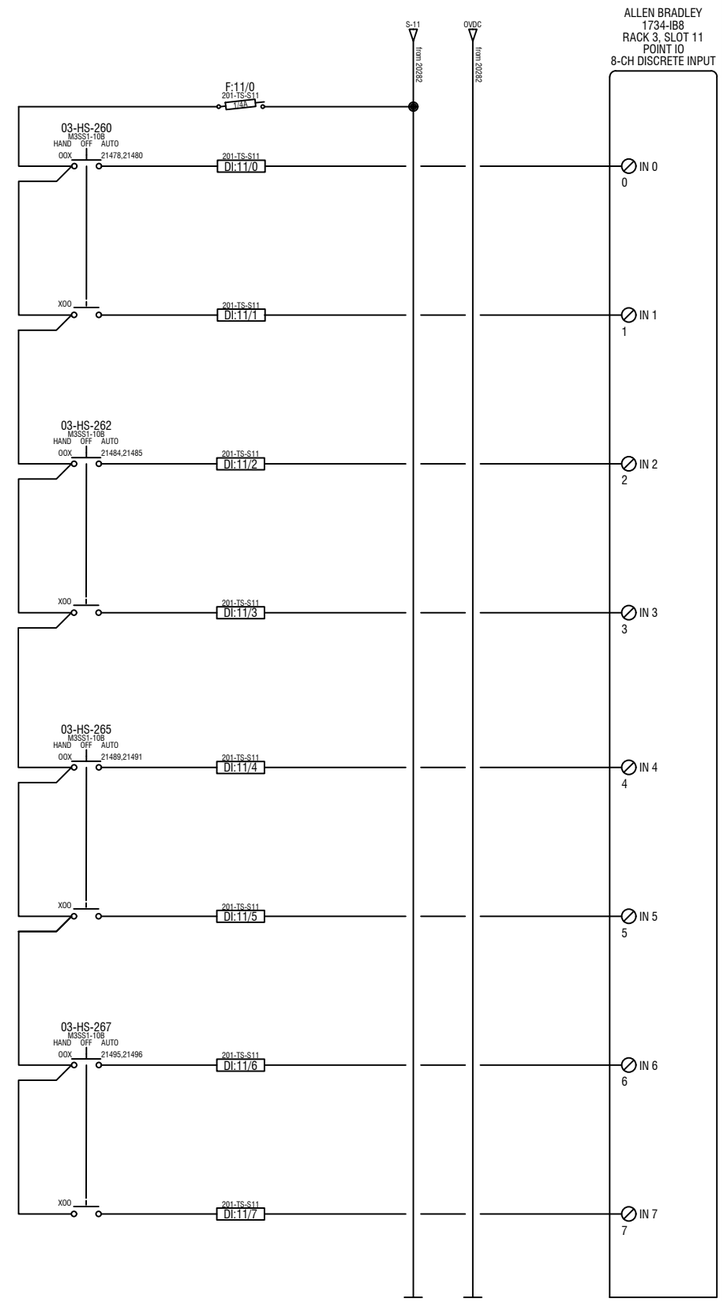

Filter Tank 5 Inlet Valve HOA Switch - Auto
03-XHS-260A

Filter Tank 5 Inlet Valve HOA Switch - Hand
03-XHS-260B

Filter Tank 5 Air Scour Valve HOA Switch - Auto
03-XHS-262A

Filter Tank 5 Air Scour Valve HOA Switch - Hand
03-XHS-262B

Filter Tank 5 Turbidity Sample Solenoid Valve - Auto
03-AHS-265A

Filter Tank 5 Turbidity Sample Solenoid Valve - Hand
03-AHS-265B

Filter Tank 5 Backwash Supply Valve HOA Switch - Auto
03-AHS-267A

Filter Tank 5 Backwash Supply Valve HOA Switch - Hand
03-AHS-267B

ENGINEER'S SEAL
PROFESSIONAL ENGINEER
PROVINCE OF BRITISH COLUMBIA
H. WU
36191
2023-04-05

PERMIT TO PRACTICE
AWC WATER SOLUTIONS LTD.
NAME: Wu, Hao
SIGNATURE:
EGBC ID #: 166409
DATE: 2023-04-05
PERMIT NUMBER: 1000417
ENGINEERS & GEOSCIENTISTS
BRITISH COLUMBIA (EGBC)

REV	DESCRIPTIONS	DATE	DFT	CHK	APP
0	ISSUED FOR CONSTRUCTION	5-APR-23	JB	RMF	CW

REVISIONS

9087A 198 Street Langley, BC Canada V1M 3B1
Phone : 604-936-4217
www.awcsolutions.com

THIS DRAWING IS THE PROPERTY OF AWC AND CONTAINS PROPRIETARY AND CONFIDENTIAL INFORMATION WHICH MUST NOT BE DUPLICATED, USED OR DISCLOSED OTHER THAN EXPRESSLY AUTHORIZED BY AWC.

CLIENT	CITY & BOROUGH OF WRANGELL
PROJECT	WRANGELL WTP
TITLE	DIGITAL INPUT CARD SLOT 11

SCALE	PROJECTION	DEFAULT UNITS	SHEET SIZE	SHEET NUMBER
NTS		INCH	17X11	13 OF 23

DRAWING NUMBER	REVISION
17805-IC-SCD-201	0

FIELD DEVICE	FIELD	CONTROL PANEL	DESCRIPTION

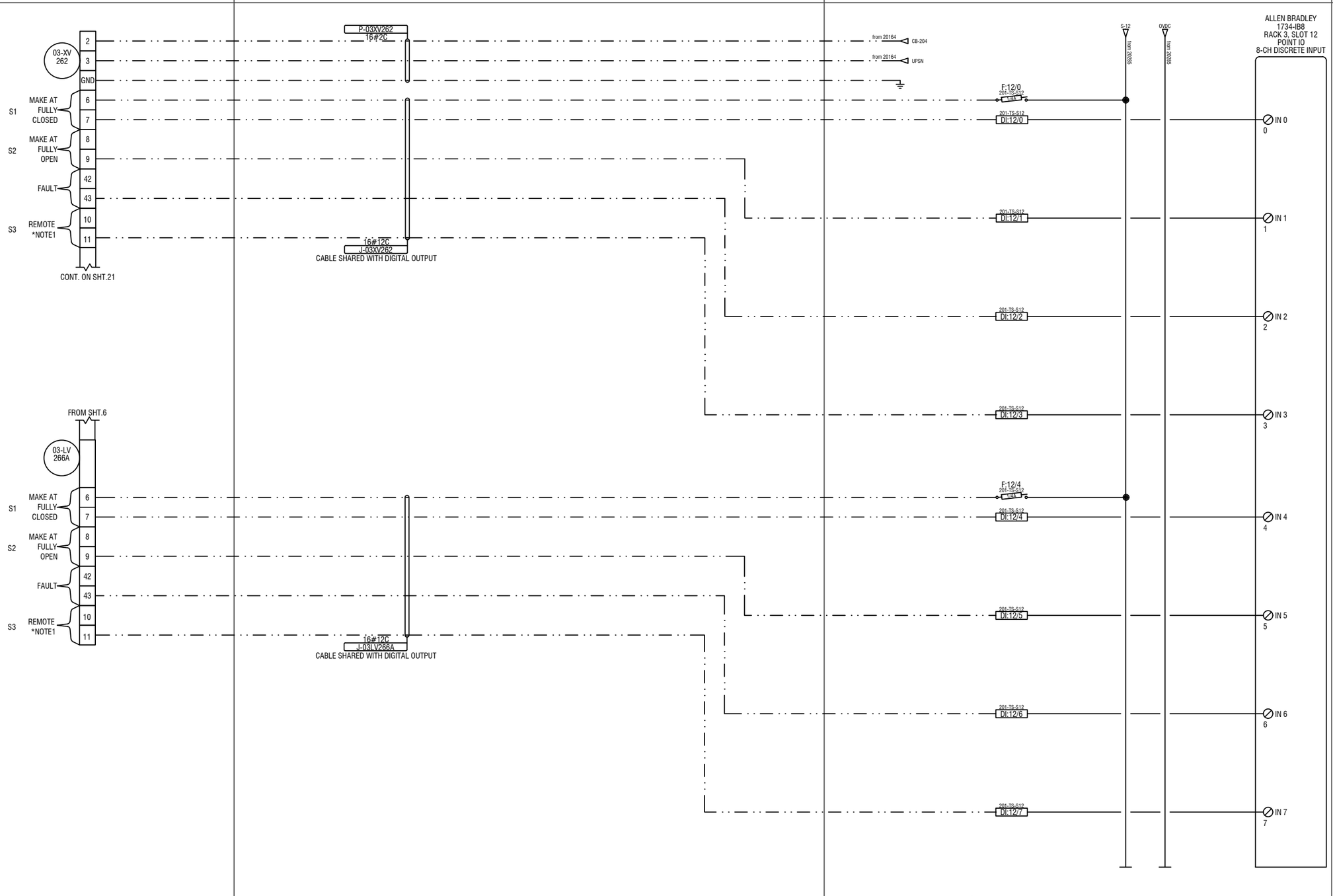

NOTES:
1. PROGRAM CONTACT S3 (TERMINAL10,11) FOR LOCAL REMOTE STATUS

ENGINEER'S SEAL
PROFESSIONAL ENGINEER
PROVINCE OF BRITISH COLUMBIA
H. WU
36191
2023-04-05

PERMIT TO PRACTICE
AWC WATER SOLUTIONS LTD.
NAME: Wu, Hao
SIGNATURE:
EGBC ID #: 166409
DATE: 2023-04-05
PERMIT NUMBER: 1000417
ENGINEERS & GEOSCIENTISTS BRITISH COLUMBIA (EGBC)

REV	DESCRIPTIONS	DATE	DFT	CHK	APP
0	ISSUED FOR CONSTRUCTION	5-APR-23	SB	RWE	OW

REVISIONS

9087A 198 Street Langley, BC Canada V1M 3B1
Phone : 604-936-4217
www.awcsolutions.com

THIS DRAWING IS THE PROPERTY OF AWC AND CONTAINS PROPRIETARY AND CONFIDENTIAL INFORMATION WHICH MUST NOT BE DUPLICATED, USED OR DISCLOSED OTHER THAN EXPRESSLY AUTHORIZED BY AWC.

CLIENT: CITY & BOROUGH OF WRANGELL
PROJECT: WRANGELL WTP
TITLE: DIGITAL INPUT CARD SLOT 12

SCALE	PROJECTION	DEFAULT UNITS	SHEET SIZE	SHEET NUMBER
NTS		INCH	17X11	14 OF 23

DRAWING NUMBER: 17805-IC-SCD-201
REVISION: 0

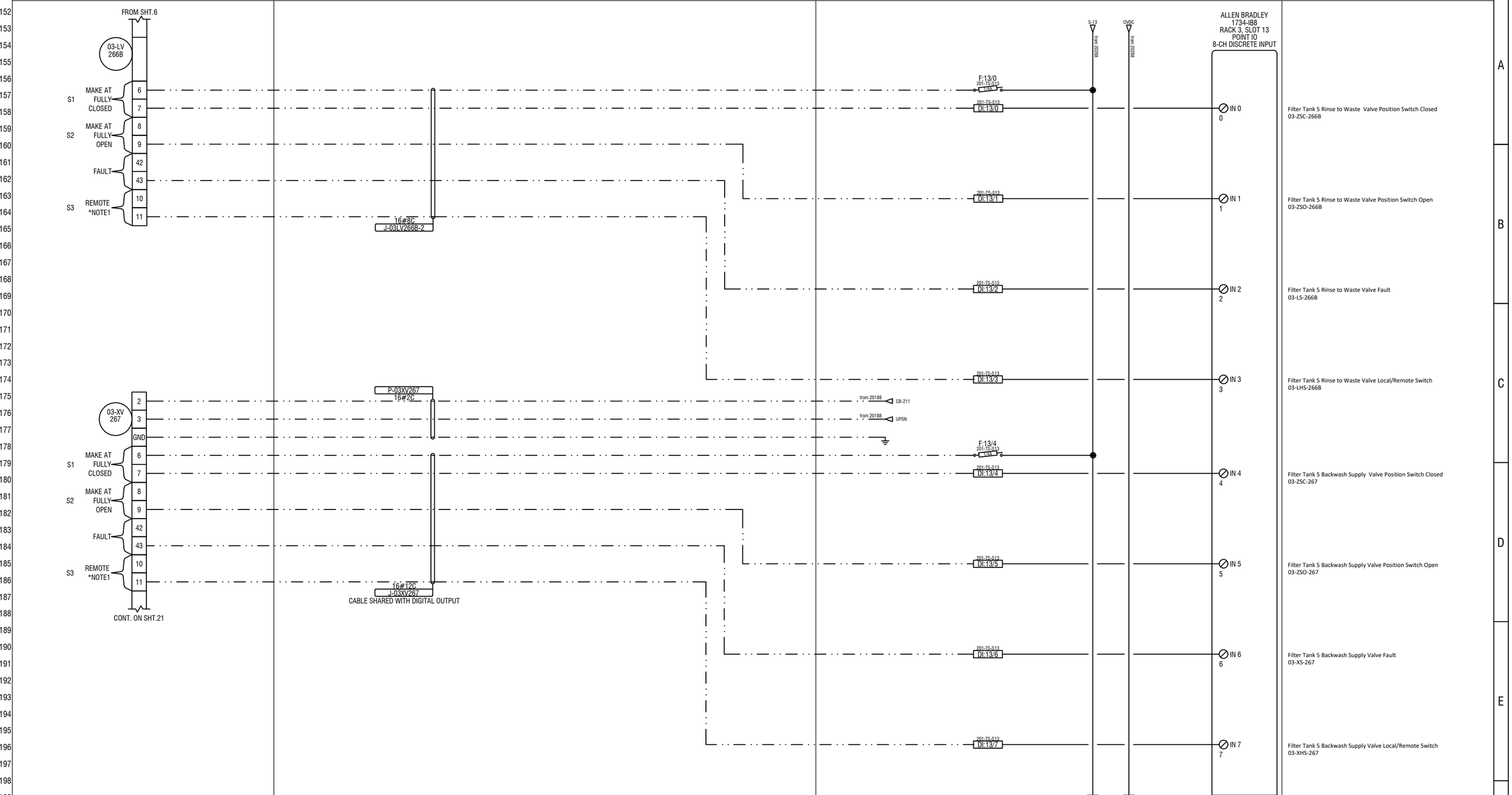

NOTES:
1. PROGRAM CONTACT S3 (TERMINAL10,11) FOR LOCAL REMOTE STATUS

ENGINEER'S SEAL
PROFESSIONAL ENGINEER
PROVINCE OF BRITISH COLUMBIA
H. WU
36191
2023-04-05

PERMIT TO PRACTICE
AWC WATER SOLUTIONS LTD.
NAME: Wu, Hao
SIGNATURE:
EGBC ID #: 166409
DATE: 2023-04-05
PERMIT NUMBER: 1000417
ENGINEERS & GEOSCIENTISTS
BRITISH COLUMBIA (EGBC)

REV	DESCRIPTIONS	DATE	DFT	CHK	APP
0	ISSUED FOR CONSTRUCTION	5-APR-23	PB	RMF	CW

REVISIONS

AWC
9087A 198 Street Langley, BC Canada V1M 3B1
Phone : 604-936-4217
www.awcsolutions.com

THIS DRAWING IS THE PROPERTY OF AWC AND CONTAINS PROPRIETARY AND CONFIDENTIAL INFORMATION WHICH MUST NOT BE DUPLICATED, USED OR DISCLOSED OTHER THAN EXPRESSLY AUTHORIZED BY AWC.

CLIENT: CITY & BOROUGH OF WRANGELL
PROJECT: WRANGELL WTP
TITLE: DIGITAL INPUT CARD SLOT 13

SCALE	PROJECTION	DEFAULT UNITS	SHEET SIZE	SHEET NUMBER
NTS		INCH	17X11	15 OF 23

DRAWING NUMBER: 17805-IC-SCD-201
REVISION: 0

FIELD DEVICE	FIELD	CONTROL PANEL	DESCRIPTION

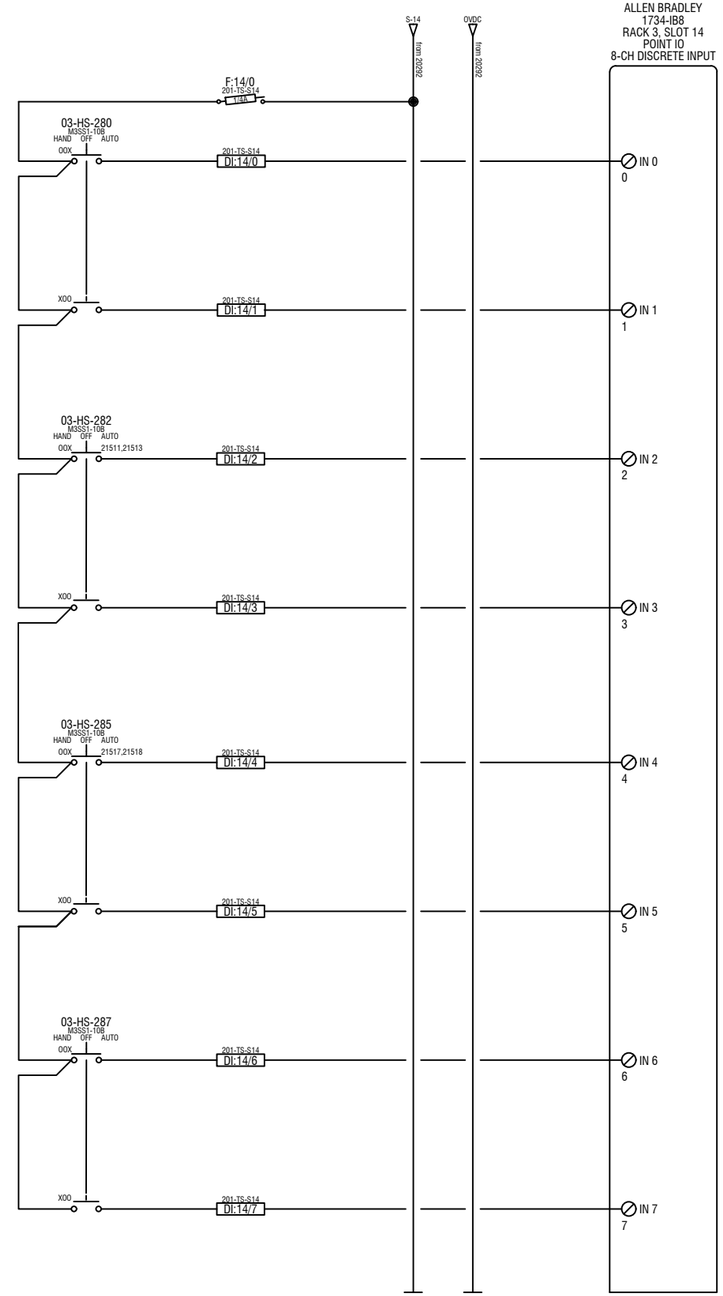

ENGINEER'S SEAL

PROFESSIONAL ENGINEER — PROVINCE OF BRITISH COLUMBIA — H. WU # 36191

2023-04-05

PERMIT TO PRACTICE
AWC WATER SOLUTIONS LTD.

NAME: Wu, Hao
SIGNATURE:
EGBC ID #: 166409
DATE: 2023-04-05

PERMIT NUMBER: 1000417
ENGINEERS & GEOSCIENTISTS
BRITISH COLUMBIA (EGBC)

REV	DESCRIPTIONS	DATE	DFT	CHK	APP
0	ISSUED FOR CONSTRUCTION	5-APR-23	JB	RME	CW

REVISIONS

9087A 198 Street Langley, BC Canada V1M 3B1
Phone : 604-936-4217
www.awcsolutions.com

THIS DRAWING IS THE PROPERTY OF AWC AND CONTAINS PROPRIETARY AND CONFIDENTIAL INFORMATION WHICH MUST NOT BE DUPLICATED, USED OR DISCLOSED OTHER THAN EXPRESSLY AUTHORIZED BY AWC.

CLIENT: CITY & BOROUGH OF WRANGELL

PROJECT: WRANGELL WTP

TITLE: DIGITAL INPUT CARD SLOT 14

SCALE	PROJECTION	DEFAULT UNITS	SHEET SIZE	SHEET NUMBER
NTS		INCH	17X11	16 OF 23

DRAWING NUMBER: 17805-IC-SCD-201

REVISION: 0

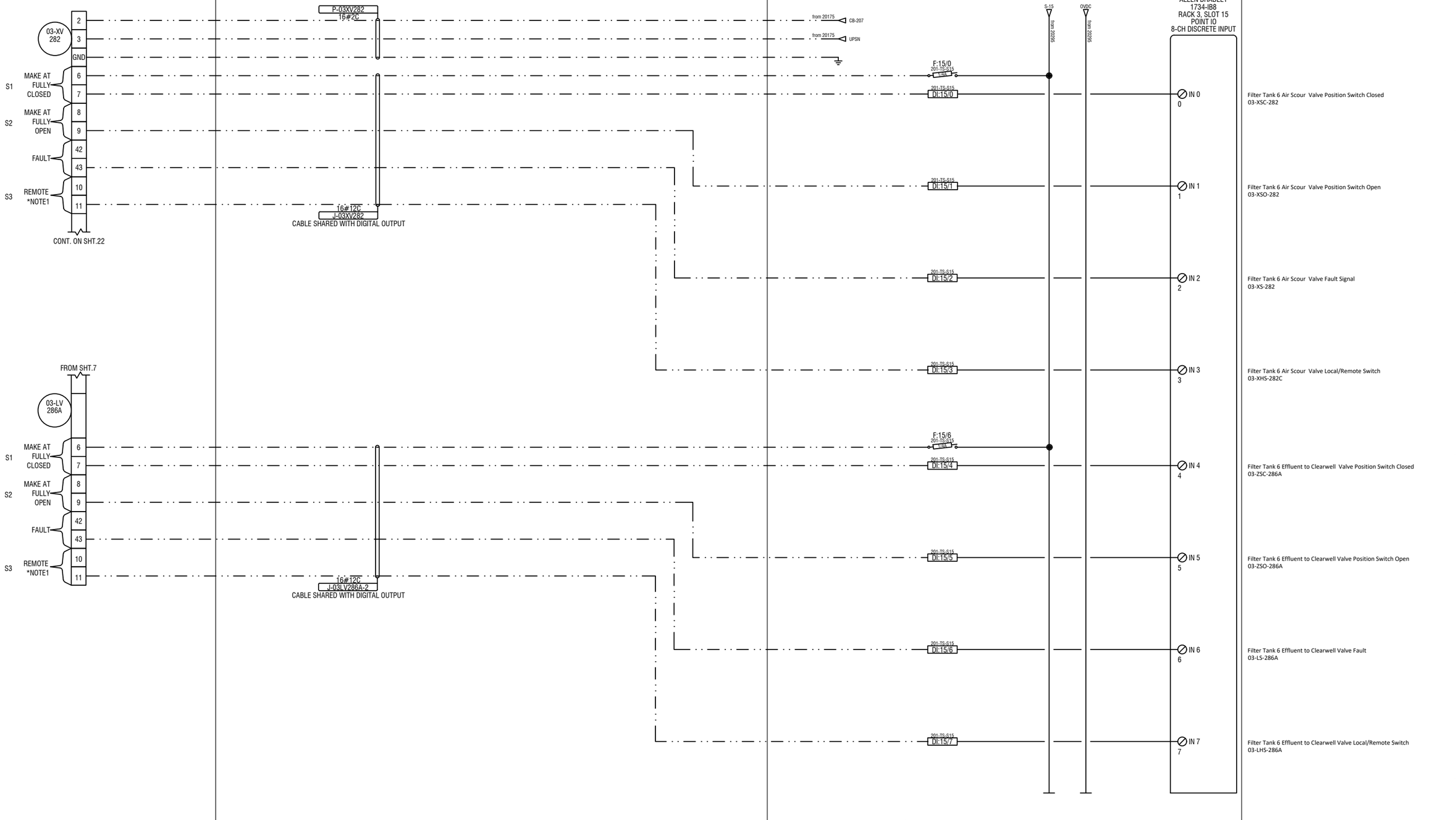

NOTES:
1. PROGRAM CONTACT S3 (TERMINAL10,11) FOR LOCAL REMOTE STATUS

ENGINEER'S SEAL
PROFESSIONAL ENGINEER
PROVINCE OF BRITISH COLUMBIA
H. WU
36191
2023-04-05

PERMIT TO PRACTICE
AWC WATER SOLUTIONS LTD.
NAME: Wu, Hao
SIGNATURE:
EGBC ID #: 166409
DATE: 2023-04-05
PERMIT NUMBER: 1000417
ENGINEERS & GEOSCIENTISTS BRITISH COLUMBIA (EGBC)

REV	DESCRIPTIONS	DATE	DFT	CHK	APP
0	ISSUED FOR CONSTRUCTION	5-APR-23	AD	DKE	CW

REVISIONS

AWC
9087A 198 Street Langley, BC Canada V1M 3B1
Phone : 604-936-4217
www.awcsolutions.com

THIS DRAWING IS THE PROPERTY OF AWC AND CONTAINS PROPRIETARY AND CONFIDENTIAL INFORMATION WHICH MUST NOT BE DUPLICATED, USED OR DISCLOSED OTHER THAN EXPRESSLY AUTHORIZED BY AWC.

CLIENT: CITY & BOROUGH OF WRANGELL
PROJECT: WRANGELL WTP
TITLE: DIGITAL INPUT CARD SLOT 15

SCALE	PROJECTION	DEFAULT UNITS	SHEET SIZE	SHEET NUMBER
NTS		INCH	17X11	17 OF 23

DRAWING NUMBER: 17805-IC-SCD-201
REVISION: 0

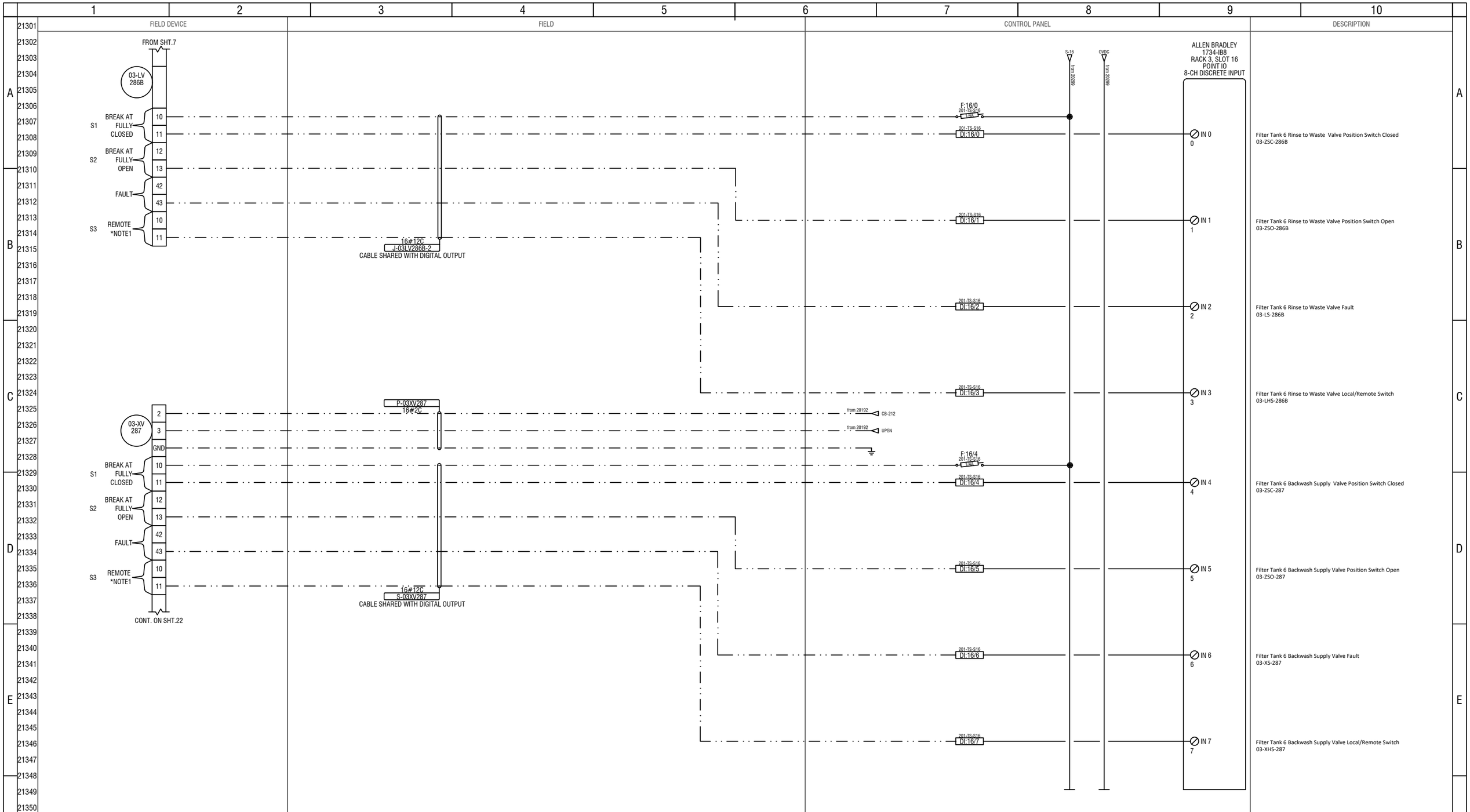

NOTES:
1. PROGRAM CONTACT S3 (TERMINAL10,11) FOR LOCAL REMOTE STATUS

ENGINEER'S SEAL
PROFESSIONAL ENGINEER
PROVINCE OF BRITISH COLUMBIA
H. WU
36191
2023-04-05

PERMIT TO PRACTICE
AWC WATER SOLUTIONS LTD.
NAME: Wu, Hao
SIGNATURE:
EGBC ID #: 166409
DATE: 2023-04-05
PERMIT NUMBER: 1000417
ENGINEERS & GEOSCIENTISTS
BRITISH COLUMBIA (EGBC)

REV	DESCRIPTIONS	DATE	DFT	CHK	APP
0	ISSUED FOR CONSTRUCTION	5-APR-23	[illegible]	RMF	CW

REVISIONS

AWC
9087A 198 Street Langley, BC Canada V1M 3B1
Phone : 604-936-4217
www.awcsolutions.com

THIS DRAWING IS THE PROPERTY OF AWC AND CONTAINS PROPRIETARY AND CONFIDENTIAL INFORMATION WHICH MUST NOT BE DUPLICATED, USED OR DISCLOSED OTHER THAN EXPRESSLY AUTHORIZED BY AWC.

CLIENT: CITY & BOROUGH OF WRANGELL
PROJECT: WRANGELL WTP
TITLE: DIGITAL INPUT CARD SLOT 16

SCALE	PROJECTION	DEFAULT UNITS	SHEET SIZE	SHEET NUMBER
NTS		INCH	17X11	18 OF 23

DRAWING NUMBER: 17805-IC-SCD-201
REVISION: 0

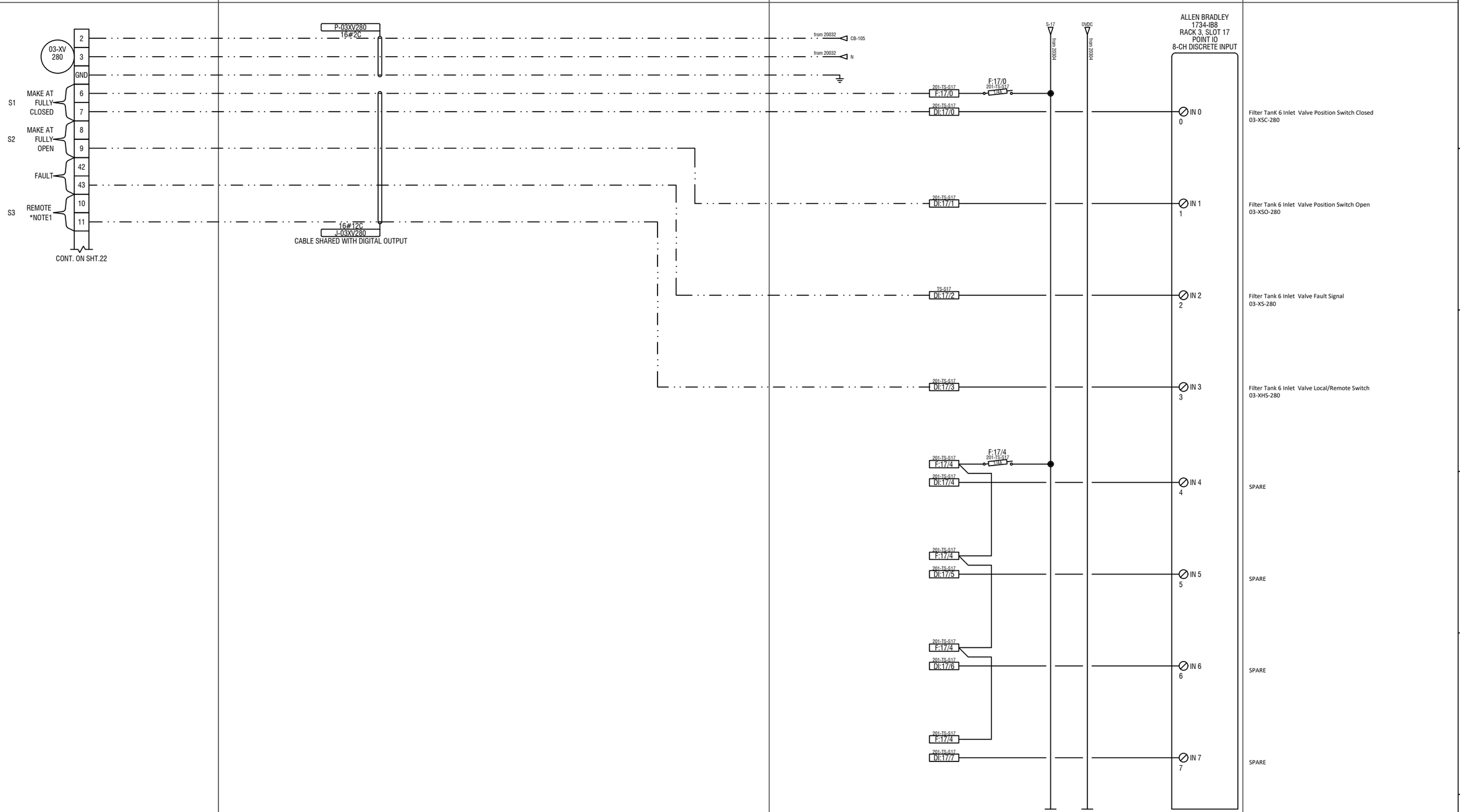

NOTES:

1. PROGRAM CONTACT S3 (TERMINAL10,11) FOR LOCAL REMOTE STATUS

ENGINEER'S SEAL
PROFESSIONAL ENGINEER
PROVINCE OF BRITISH COLUMBIA
H. WU
36191
2023-04-05

PERMIT TO PRACTICE
AWC WATER SOLUTIONS LTD.
NAME: Wu, Hao
SIGNATURE:
EGBC ID #: 166409
DATE: 2023-04-05
PERMIT NUMBER: 1000417
ENGINEERS & GEOSCIENTISTS
BRITISH COLUMBIA (EGBC)

REV	DESCRIPTIONS	DATE	DFT	CHK	APP
0	ISSUED FOR CONSTRUCTION	5-APR-23			

REVISIONS

9087A 198 Street Langley, BC Canada V1M 3B1
Phone : 604-936-4217
www.awcsolutions.com

THIS DRAWING IS THE PROPERTY OF AWC AND CONTAINS PROPRIETARY AND CONFIDENTIAL INFORMATION WHICH MUST NOT BE DUPLICATED, USED OR DISCLOSED OTHER THAN EXPRESSLY AUTHORIZED BY AWC.

CLIENT: CITY & BOROUGH OF WRANGELL
PROJECT: WRANGELL WTP
TITLE: DIGITAL INPUT CARD SLOT 17
SCALE: NTS | PROJECTION | DEFAULT UNITS: INCH | SHEET SIZE: 17X11 | SHEET NUMBER: 19 OF 23
DRAWING NUMBER: 17805-IC-SCD-201
REVISION: 0

FIELD DEVICE	FIELD	CONTROL PANEL	DESCRIPTION

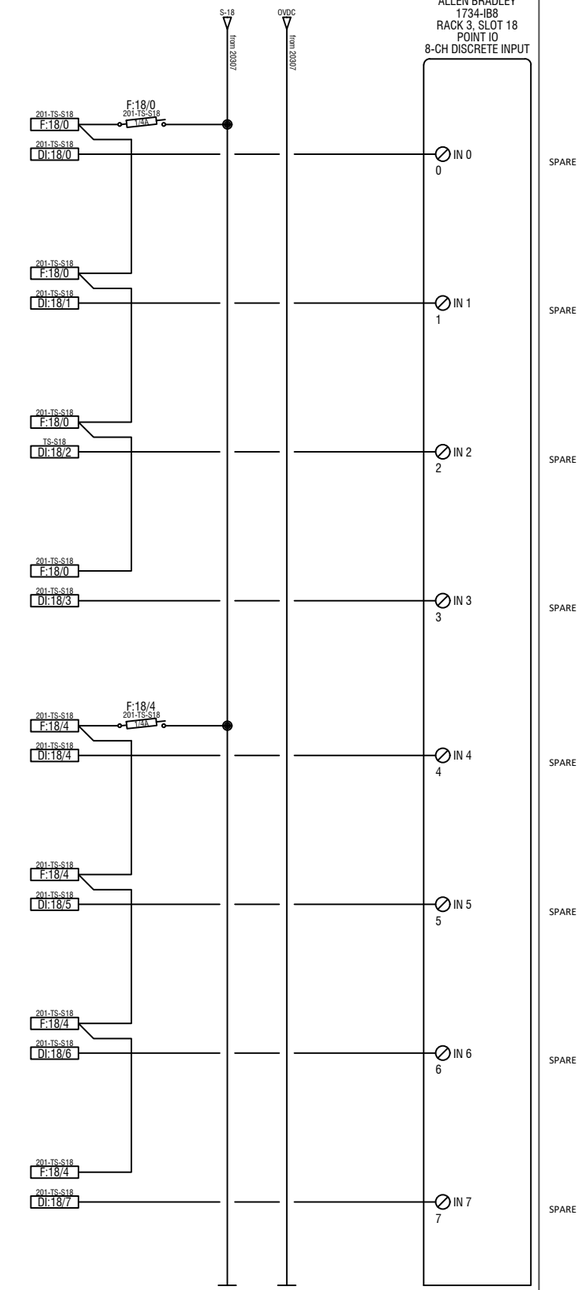

ENGINEER'S SEAL
PROFESSIONAL ENGINEER
PROVINCE OF BRITISH COLUMBIA
H. WU
36191
2023-04-05

PERMIT TO PRACTICE
AWC WATER SOLUTIONS LTD.
NAME: Wu, Hao
SIGNATURE:
EGBC ID #: 166409
DATE: 2023-04-05
PERMIT NUMBER: 1000417
ENGINEERS & GEOSCIENTISTS
BRITISH COLUMBIA (EGBC)

REV	DESCRIPTIONS	DATE	DFT	CHK	APP
0	ISSUED FOR CONSTRUCTION	5-APR-23	AD	RMF	OW

REVISIONS

9087A 198 Street Langley, BC Canada V1M 3B1
Phone : 604-936-4217
www.awcsolutions.com

THIS DRAWING IS THE PROPERTY OF AWC AND CONTAINS PROPRIETARY AND CONFIDENTIAL INFORMATION WHICH MUST NOT BE DUPLICATED, USED OR DISCLOSED OTHER THAN EXPRESSLY AUTHORIZED BY AWC.

CLIENT: CITY & BOROUGH OF WRANGELL
PROJECT: WRANGELL WTP
TITLE: DIGITAL INPUT CARD SLOT 18

SCALE	PROJECTION	DEFAULT UNITS	SHEET SIZE	SHEET NUMBER
NTS		INCH	17X11	20 OF 23

DRAWING NUMBER: 17805-IC-SCD-201
REVISION: 0

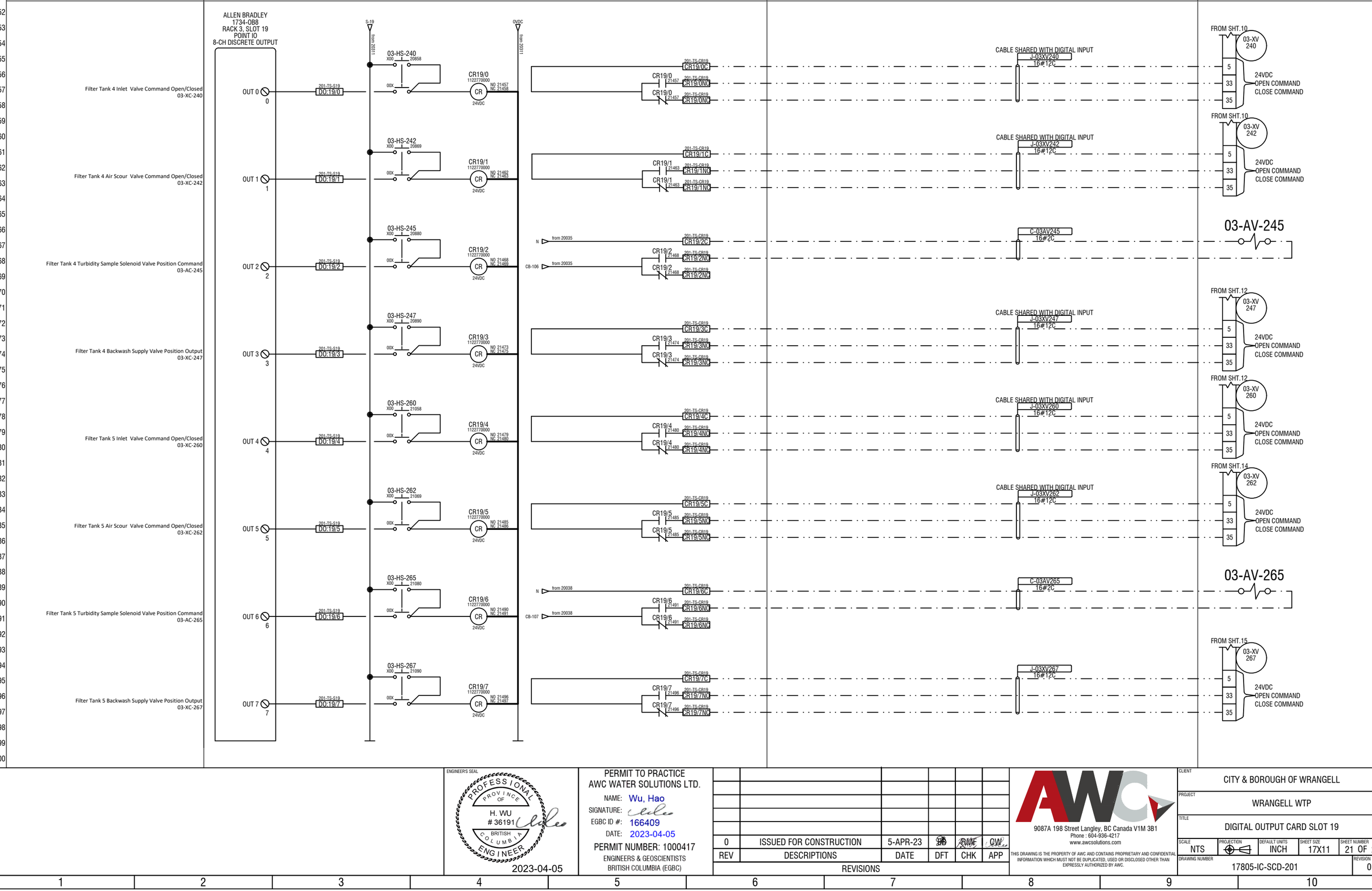

ENGINEER'S SEAL

PROFESSIONAL ENGINEER
PROVINCE OF BRITISH COLUMBIA
H. WU
36191

2023-04-05

PERMIT TO PRACTICE
AWC WATER SOLUTIONS LTD.
NAME: Wu, Hao
SIGNATURE:
EGBC ID #: 166409
DATE: 2023-04-05
PERMIT NUMBER: 1000417
ENGINEERS & GEOSCIENTISTS
BRITISH COLUMBIA (EGBC)

REV	DESCRIPTIONS	DATE	DFT	CHK	APP
0	ISSUED FOR CONSTRUCTION	5-APR-23	BD	RWF	CW

REVISIONS

9087A 198 Street Langley, BC Canada V1M 3B1
Phone : 604-936-4217
www.awcsolutions.com

THIS DRAWING IS THE PROPERTY OF AWC AND CONTAINS PROPRIETARY AND CONFIDENTIAL INFORMATION WHICH MUST NOT BE DUPLICATED. USED OR DISCLOSED OTHER THAN EXPRESSLY AUTHORIZED BY AWC.

CLIENT: CITY & BOROUGH OF WRANGELL
PROJECT: WRANGELL WTP
TITLE: DIGITAL OUTPUT CARD SLOT 19

SCALE	PROJECTION	DEFAULT UNITS	SHEET SIZE	SHEET NUMBER
NTS		INCH	17X11	21 OF 23

DRAWING NUMBER: 17805-IC-SCD-201
REVISION: 0

CONTROL PANEL | CONTROL PANEL | FIELD DEVICE

ALLEN BRADLEY
1734-OB8
RACK 3, SLOT 20
POINT IO
8-CH DISCRETE OUTPUT

S-20 from 20314 | 0VDC from 20314

Filter Tank 6 Inlet Valve Command Open/Closed 03-XC-280	OUT 0 / 0	201-TS-S20 DO:20/0	03-HS-280 X00 21208, 00X	CR20/0 1122770000 NO 21507 NC 21508	CR20/0C, CR20/0NO, CR20/0NC	CABLE SHARED WITH DIGITAL INPUT J-03XV280 16#12C → FROM SHT.19 03-XV 280: 5, 33, 35 → 24VDC OPEN COMMAND CLOSE COMMAND
Filter Tank 6 Air Scour Valve Command Open/Closed 03-AC-282	OUT 1 / 1	201-TS-S20 DO:20/1	03-HS-282 X00 21219, 00X	CR20/1 1122770000 NO 21512 NC 21513	CR20/1C, CR20/1NO, CR20/1NO	CABLE SHARED WITH DIGITAL INPUT J-03XV282 16#12C → FROM SHT.17 03-XV 282: 5, 33, 35 → 24VDC OPEN COMMAND CLOSE COMMAND
Filter Tank 6 Turbidity Sample Solenoid Valve Position Command 03-AC-285	OUT 2 / 2	201-TS-S20 DO:20/2	03-HS-285 X00 21230, 00X	CR20/2 1122770000 NO 21518 NC 21519	N from 20042, CB-108 from 20042; CR20/2C, CR20/2NO, CR20/2NO	C-03AV285 16#2C → 03-AV-285
Filter Tank 6 Backwash Supply Valve Position Output 03-XC-287	OUT 3 / 3	201-TS-S20 DO:20/3	03-HS-287 X00 21240, 00X	CR20/3 1122770000 NO 21523 NC 21525	CR20/3C, CR20/3NO, CR20/3NO	CABLE SHARED WITH DIGITAL INPUT J-03XV287 16#12C → FROM SHT.18 03-XV 287: 5, 33, 35 → 24VDC OPEN COMMAND CLOSE COMMAND
SPARE	OUT 4 / 4			CR20/4 1122770000 NO 21529 NC 21530	CR20/4C, CR20/4NO, CR20/4NO	
SPARE	OUT 5 / 5			CR20/5 1122770000 NO 21535 NC 21536	CR20/5C, CR20/5NO, CR20/5NO	
SPARE	OUT 6 / 6			CR20/6 1122770000 NO 21540 NC 21541	CR20/6C, CR20/6NO, CR20/6NO	
SPARE	OUT 7 / 7			CR20/7 1122770000 NO 21546 NC 21547	CR20/7C, CR20/7NO, CR20/7NO	

All CR coils: 24VDC

ENGINEER'S SEAL
PROFESSIONAL ENGINEER — PROVINCE OF BRITISH COLUMBIA — H. WU # 36191
2023-04-05

PERMIT TO PRACTICE
AWC WATER SOLUTIONS LTD.
NAME: Wu, Hao
SIGNATURE:
EGBC ID #: 166409
DATE: 2023-04-05
PERMIT NUMBER: 1000417
ENGINEERS & GEOSCIENTISTS BRITISH COLUMBIA (EGBC)

REV	DESCRIPTIONS	DATE	DFT	CHK	APP
0	ISSUED FOR CONSTRUCTION	5-APR-23	JB	RME	CW

REVISIONS

9087A 198 Street Langley, BC Canada V1M 3B1
Phone : 604-936-4217
www.awcsolutions.com

THIS DRAWING IS THE PROPERTY OF AWC AND CONTAINS PROPRIETARY AND CONFIDENTIAL INFORMATION WHICH MUST NOT BE DUPLICATED, USED OR DISCLOSED OTHER THAN EXPRESSLY AUTHORIZED BY AWC.

CLIENT: CITY & BOROUGH OF WRANGELL
PROJECT: WRANGELL WTP
TITLE: DIGITAL OUTPUT CARD SLOT 20

SCALE	PROJECTION	DEFAULT UNITS	SHEET SIZE	SHEET NUMBER
NTS		INCH	17X11	22 OF 23

DRAWING NUMBER: 17805-IC-SCD-201
REVISION: 0

AWC ELECTRICAL LINE TYPES

- PANEL WIRING BY AWC
- FIELD WIRING BY AWC
- FIELD WIRING BY AWC - DISCONNECTED FOR SHIPPING THEN REINSTALLED BY OTHERS
- WIRING DONE BY OTHERS
- COMMUNICATION WIRING BY AWC
- MECHANICAL JUMPER BAR

AWC WIRE COLOR CODE

CONDUCTOR DESCRIPTION	COLOR
THREE PHASE CONDUCTORS	BLACK
SINGLE PHASE CONDUCTORS	RED
GROUNDED AC CONDUCTORS	WHITE
DC POSITICE	BROWN
DC NEGATIVE	GRAY
DISCRETE INPUT (DC)	BLUE
DISCRETE OUTPUT (DC)	PURPLE
DISCRETE INPUT (AC)	RED
DISCRETE OUTPUT (AC)	ORANGE
GROUNDING CONDUCTORS & SHIELDS	GREEN

AWC TERMINAL NUMBER DESCRIPTION

TERMINAL SERIES	DESCRIPTION
0-99	USED FOR 208-600V AC TAGS
100-199	USED FOR 120V AC TAGS
200-299	USED FOR 120V AC UPS TAGS
300-399	USED FOR 24V DC TAGS

AWC TERMINAL TAG DESCRIPTION

EXAMPLE: AI:1/0+
- SUFFIX
- I/O CARD CHANNEL NUMBER
- I/O CARD SLOT NUMBER
- CATEGORY: REFER TO ABBREVIATIONS

EXAMPLE: VFD-115
- TERMINAL SERIES OR EQUIPMENT NUMBER
- CATEGORY: REFER TO ABBREVIATIONS

AWC TERMINAL BLOCK COLOR CODES

TERMINAL BLOCK COLORS	DESCRIPTION
BLUE	INTRINSICALLY SAFE SIGNALS
GREEN	ANALOG SHIELDS
BEIGE	POWER AND CONTROL
GREEN/YELLOW	GROUND TERMINALS

AWC CABLE TAG DESCRIPTION

CABLE CATEGORY	DESCRIPTION
P	ELECTRICAL EQUIPMENT POWER
C	ELECTRICAL EQUIPMENT CONTROL
J	LOW VOLTAGE AND ANALOG SIGNALS
COMM	COMMUNICATION

EXAMPLE: P-VFD100-01
- CABLE SEQUENCE NUMBER FOR MULTI-PART CABLE TAGS
- EQUIPMENT NUMBER
- CATEGORY: REFER TO ABBREVIATIONS
- CABLE CATEGORY

ABBREVIATIONS

A	AMPERE
A/C	AIR CONDITIONER
AE	ANALYZER ELEMENT
AI	ANALOG INPUT
AIT	ANALYZER INDICATION TRANSMITTER
AO	ANALOG OUTPUT
ATS	AUTOMATIC TRANSFER SWITCH
AUX	AUXILIARY
C	CONTACTOR
CB	CIRCUIT BREAKER
CR	CONTROL RELAY
CT	CURRENT TRANSFORMER
DAF	DISSOLVED AIR FLOTATION
DI	DISCRETE INPUT
DS	DISCONNECT SWITCH
DO	DISCRETE OUTPUT
F	FUSE
FIT	FLOW INDICATION TRANSMITTER
FLA	FULL LOAD AMPS
FV	FLOW VALVE
GAD	GENERAL ARRANGEMENT DRAWING
GFCI	GROUND FAULT CIRCUIT INTERRUPTER
GND	GROUND
HE	HEATER
HP	HORSE POWER
HS	HAND SWITCH
HMI	HUMAN MACHINE INTERFACE
Hz	HERTZ
JB	JUNCTION BOX
kVA	KILOVOLT AMPERE
LCP	LOCAL CONTROL PANEL
LIT	LEVEL INDICATION TRANSMITTER
LS	LEVEL SWITCH
LSHH	LEVEL SWITCH HIGH HIGH
LSLL	LEVEL SWITCH LOW LOW
LV	LEVEL VALVE
MCB	MAIN CIRCUIT BREAKER
MCP	MOTOR CIRCUIT PROTECTOR
MCR	MASTER CONTROL RELAY
N	NEUTRAL
NET	NETWORK
NC	NORMALLY CLOSED
NO	NORMALLY OPEN
NS	NETWORK SWITCH
ORP	OXIDATION REDUCTION POTENTIAL
OIT	OPERATOR INTERFACE TERMINAL
P	PUMP
PB	PUSH BUTTON
PH	PHASE
pH	POTENTIAL HYDROGEN
PLC	PROGRAMMABLE LOGIC CONTROLLER
PM	POWER MONITOR
POT	POTENTIOMETER
PS	POWER SUPPLY
PSH	PRESSURE SWITCH HIGH
PSL	PRESSURE SWITCH LOW
PT	PRESSURE TRANSMITTER
R	REACTOR
REC	RECEPTACLE
RCP	REMOTE CONTROL PANEL
REV	REVISION
S	SLOT
SCD	SCHEMATIC
SHLD	SHIELD
SKM	SKIMMER
SPD	SURGE PROTECTION DEVICE
STP	SHIELDED TWISTED PAIR
SW	SWITCH
TEMP	TEMPERATURE
TR	TIMING RELAY
TURB	TURBIDITY
TS	TEMPERATURE SWITCH
TSH	TEMPERATURE SWITCH HIGH
TSL	TEMPERATURE SWITCH LOW
UPS	UNINTERRUPTIBLE POWER SUPPLY
V	VOLT
V AC	VOLTAGE ALTERNATING CURRENT
V DC	VOLTAGE DIRECT CURRENT
VFD	VARIABLE FREQUENCY DRIVE
W	WATT
WTP	WATER TREATMENT PLANT

ELECTRICAL, INSTRUMENTATION & CONTROL SCHEMATIC SYMBOLS

	CIRCUIT BREAKER		FACTORY CABLE PLUG OR DISCONNECTABLE CONNECTOR	OFF ON OX	OFF ON XO	TWO POSITION MAINTAINED CONTACT
	MOTOR CIRCUIT PROTECTOR	L1	POWER DISTRIBUTION BLOCK (L1, L2, L3, N, ETC...)	HAND OFF AUTO XOO	HAND OFF AUTO OXO	THREE POSITION MAINTAINED CONTACT
	REACTOR		DUPLEX RECEPTACLE			MOMENTARY PUSH BUTTON NORMALLY OPEN & NORMALLY CLOSED CONTACT
	DISCONNECT SWITCH		SIMPLEX RECEPTACLE			E-STOP PUSH BUTTON NORMALLY CLOSED & NORMALLY OPEN MAINTAINED CONTACT
	FUSED DISCONNECT SWITCH		CORD END PLUG			TEMPERATURE SWITCH NORMALLY OPEN & NORMALLY CLOSED
	FUSE HOLDER		CORD END RECEPTACLE			LEVEL SWITCH NORMALLY OPEN & NORMALLY CLOSED
	SOLENOID					PRESSURE SWITCH NORMALLY OPEN & NORMALLY CLOSED
	THERMISTOR					LIMIT SWITCH NORMALLY OPEN & NORMALLY CLOSED
	DIODE					LIMIT SWITCH NORMALLY OPEN HELD CLOSED & NORMALLY CLOSED HELD OPEN
	RESISTOR					NORMALLY OPEN ON-DELAY (TC) CONTACT & NORMALLY CLOSED ON-DELAY (TO) CONTACT
	CAPACITOR					NORMALLY OPEN OFF-DELAY (TO) CONTACT & NORMALLY CLOSED OFF-DELAY (TC) CONTACT
	GROUND					RELAY CONTACT NORMALLY OPEN AND NORMALLY CLOSED
	3 PHASE MOTOR					WIRE SOURCE AND WIRE DESTINATION
	1 PHASE MOTOR					
	RELAY COIL (CR, C, TR)					
	LIGHT					
	PANEL FAN					
	CURRENT TRANSFORMER					
	SWITCH					
	POTENTIOMETER					
	HEATER					
	THERMOCOUPLE					

GENERAL NOTES

1. RUNG NUMBERS USED FOR ELECTRICAL LINE BREAKS ARE CONTINUOUS BETWEEN THE ELECTRICAL DRAWING PACKAGES AND THE ASSOCIATED INSTRUMENTATION AND CONTROL DRAWING PACKAGES.
2. AWC TERMINAL TAGS ARE ALSO USED FOR WIRE TAGS.

ENGINEER'S SEAL
PROFESSIONAL ENGINEER — PROVINCE OF BRITISH COLUMBIA — H. WU # 36191
2023-04-05

PERMIT TO PRACTICE
AWC WATER SOLUTIONS LTD.
NAME: Wu, Hao
SIGNATURE:
EGBC ID #: 166409
DATE: 2023-04-05
PERMIT NUMBER: 1000417
ENGINEERS & GEOSCIENTISTS BRITISH COLUMBIA (EGBC)

REV	DESCRIPTIONS	DATE	DFT	CHK	APP
0	ISSUED FOR CONSTRUCTION	05-APR-23	BB	RWE	CW

REVISIONS

9087A 198 Street Langley, BC Canada V1M 3B1
Phone : 604-936-4217
www.awcsolutions.com

THIS DRAWING IS THE PROPERTY OF AWC AND CONTAINS PROPRIETARY AND CONFIDENTIAL INFORMATION WHICH MUST NOT BE DUPLICATED, USED OR DISCLOSED OTHER THAN EXPRESSLY AUTHORIZED BY AWC.

CLIENT: CITY & BOROUGH OF WRANGELL
PROJECT: WRANGELL WTP
TITLE: ELECTRICAL LEGEND

SCALE	PROJECTION	DEFAULT UNITS	SHEET SIZE	SHEET NUMBER
		INCH	17X11	23 OF 23

DRAWING NUMBER: 17805-IC-SCD-201
REVISION: 0

PROJECT NAME: Wrangell WTP

PROJECT NO.: 17805

DOCUMENT NAME: Filter Media - Highlighted Cutsheets

DOCUMENT NO.: 17805-ME-DAS-001

A	9-Jan-23	Issued for Review	JE	VD	AA
Rev	**Date**	**Revision Description**	**Originator**	**Checker**	**Approver**

\\srv-fs01\shared\Shared\Customers\CRW Engineering\17805 Wrangell AK\5 Engineering\5.12 Mech\5.12.D Datasheets\6. Filter Media

Project Name: Wrangell WTP
Project Number: 17805
Document Name: Filter Media - Highlighted Cutsheets
Document Number: 17805-ME-DAS-001
Rev: A

Media / Data	Anthracite	Sand
Application	Filter	Filter
Effective Size (mm)	0.95-1.05	0.45-0.55
U.C	1.39	1.35
Qty (ft^3)	1,200	1,600
Manufacturer	Manufacturers Mineral	Manufacturers Mineral
NSF 61	Yes	Yes
AWWA	Yes	No
Media Height	18"	24"

Project Name:	Wrangell WTP
Project Number:	17805
Document Name:	Filter Media - Highlighted Cutsheets
Document Number:	17805-ME-DAS-001
Rev:	A

ANTHRACITE (Manufacturers Mineral Co)

US Mesh	Sieve Size (mm)	Percentage Passing
30	0.6	0.51
25	0.71	0.94
20	0.86	2.55
18	1	8.84
16	1.18	27.21
14	1.4	58.65
12	1.7	96.26
10	2	99.74
8	2.36	99.91

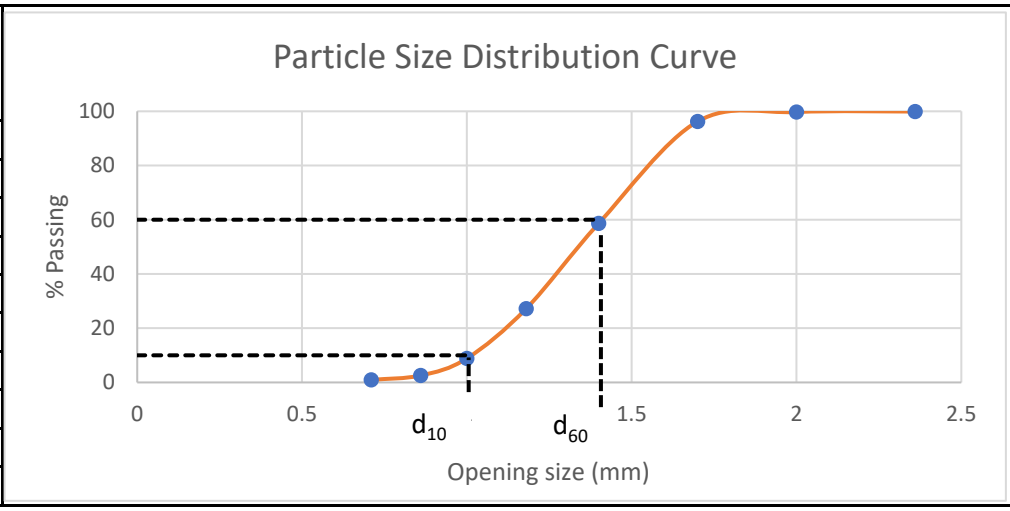

Uniformity Coefficient-d_{60}/d_{10}: 1.41/1.01: 1.39

PARTICLE SIZE ANALYSIS

Anthracite
U.C: 1.39
E.S: 1.01

Configuration	Gradex Special Calculations.xl
Date	3/17/2022
Time	15:42

Title	Data
normal	
course Material	
NSF Certified	

Special Calculations	
< 10% Passing	8.84%
> 10% Passing	27.21%
< 60% Passing	58.67%
> 60% Passing	96.26%
ES (d10) (mm)	**1.01**
d60 (mm)	**1.41**
UC	**1.39**
< 90% Passing	58.67%
> 90% Passing	96.26%
d90 (mm)	1.65

Sieve	Weight (grams)	% Retained	% Cumulative	% Passing	Sieve opening (mm)
8 US	0.1	0.09%	0.09%	99.91%	2.36
10 US	0.2	0.17%	0.26%	99.74%	2
12 US	4.1	3.49%	3.74%	96.26%	1.7
14 US	44.2	37.59%	41.33%	58.67%	1.4
16 US	37.0	31.46%	72.79%	27.21%	1.18
18 US	21.6	18.37%	91.16%	8.84%	1
20 US	7.4	6.29%	97.45%	2.55%	0.86
25 US	1.9	1.62%	99.06%	0.94%	0.71
30 US	0.5	0.43%	99.49%	0.51%	0.6
PAN	0.6	0.51%	100.00%	0.00%	PAN
TOTAL	117.6				

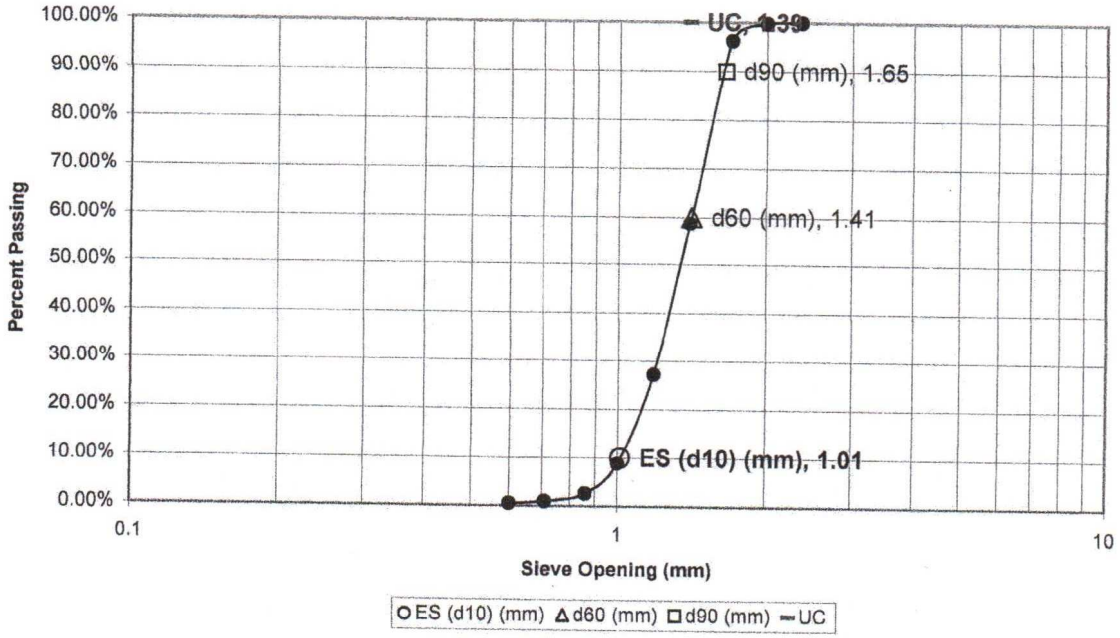

GRADEX 2000 PARTICLE SIZE ANALYZER

Typical Physical & Chemical Characteristics of Anthracite

Acid Solubility-Per AWWA B100-96 Mean .67% SD +/- .29 <2%
Caustic Solubility—Mean .70% SD +/- .31 <2%
Moh Hardness—2.7-3.0
Apparent Specific Gravity Per ASTM C-128—Mean 1.65
Source of Material-Eastern PA Middle Field, Mammouth Vein.
Percent Volatiles—Per ASTM D3175 <5%
HGI—Per ASTM D409 Standard Test Method of Grindability of Coal
By the Hargove Machine Method

Average Ultimate Analysis:

B.T.U 14,828
Nitrogen 0.8%
Hydrogen 2.1%
Carbon 80.7%
Oxygen 1.6%
Sulphur 0.8%
Ignition Point 950 Degrees F
Ash <15%

Washability Characteristics—Max Backwash Rates:Dual Media Filter

Water Temperature In Fahrenheit	Max Backwash Rate gpm/sq. ft.
50 or less	15
51-55	16
56-60	17
61-65	18.5
66-70	20
71-75	21
Above 75	22.5

SECTION 1: Identification of the substance/mixture and of the company/undertaking

1.1. Product identifier

Product identifier : Anthracite Carbon
Other identifier : Not applicable
CAS No. : 8029-10-5

1.2. Relevant identified uses of the substance or mixture and uses advised against

Use of the substance/preparation : Water treatment filter media
Use only as directed.

1.3. Details of the supplier of the safety data sheet

Manufacturers Mineral Co
1215 Monster Rd SW
Renton, WA 98057
425-228-2120

sales@manminco.com

1.4. Emergency telephone number

Emergency number 425-228-2120
Monday-Friday 8:00-4:30

SECTION 2: Hazards identification

2.1. Classification of the substance or mixture

GHS-US classification

Carc. 1A H350
STOT SE 3 H335
STOT RE 1 H372

Full text of H-phrases: see section 16

2.2. Label elements

GHS-US labelling

Hazard pictograms (GHS-US) :

: GHS08

Signal word (GHS-US) : Warning

Hazard statements (GHS-US) : H335 - May cause respiratory irritation
H320 - May cause eye irritation
H315 - May cause temporary skin irritation
H303 - May cause irritation if ingested

Precautionary statements (GHS-US) : P261 – Avoid breathing dust/fume
P264 – Wash thoroughly after handling

Response statements (GHS-US) : P305 – IF IN EYES: Irrigate for 15 minutes
P304 – IF INHALED: Remove to fresh air

Storage statements (GHS-US) : P402 – Store in a dry place
P403 – Store in a well ventilated place
P404 – Store in a closed container

2.3. Other hazards

No additional information available

SECTION 3: Composition/information on ingredients

3.1. Substances

Name	Product identifier	%	Other Identifiers
Anthracite Carbon	(CAS No.) 8029-10-5	100	$C_{15}H_{11}O$

Full text of H-phrases: see section 16

SECTION 4: First aid measures

4.1. Description of first aid measures

First-aid measures general : If medical advice is needed, have product container or label at hand.

First-aid measures after inhalation : If inhaled, remove to fresh air and keep at rest in a position comfortable for breathing. Obtain medical attention if breathing difficulty persists.

First-aid measures after skin contact : Rinse immediately with plenty of water. Gently wash with plenty of soap and water. Obtain medical attention if irritation persists.

First-aid measures after eye contact : Immediately rinse with water for a prolonged period while holding the eyelids wide open. Seek medical attention if material is embedded in eye. If eye irritation persists: Get medical advice and attention.

First-aid measures after ingestion : If swallowed, do not induce vomiting: seek medical advice immediately and show this container or label.

4.2. Most important symptoms and effects, both acute and delayed

Symptoms/injuries : Repeated or prolonged exposure may cause chronic effects

Symptoms/injuries after inhalation : May irritate or cause inflammation or pulmonary fibrosis of the respiratory system

Symptoms/injuries after skin contact : Prolonged contact with large amounts of dust may cause mechanical irritation. Dust may cause irritation in skin folds or by contact in combination with tight clothing.

Symptoms/injuries after eye contact : Redness, pain.

Symptoms/injuries after ingestion : Abdominal pain.

Chronic symptoms : Dusts may irritate the respiratory tract, skin and eyes. Prolonged exposure may cause chronic effects

4.3. Indication of any immediate medical attention and special treatment needed

Target Organs : Respiratory system and cardiovascular system

SECTION 5: Firefighting measures

5.1. Extinguishing media

Suitable extinguishing media : Dry chemical, CO2, water spray or regular foam
Apply extinguishing media carefully to avoid creating airborne dust

Unsuitable extinguishing media : None known.

5.2. Special hazards arising from the substance or mixture

Fire hazard : Avoid producing suspensions of dust during handling and avoid exposure of suspensions o sources of ignition. Suspensions of – 40 mesh particles may explode if exposed to strong ignition sources.

Explosion hazard : Carbon monoxide and carbon dioxide gas may be emitted upon combustion of material.

Reactivity : Contact with strong oxidizers such as ozone or liquid oxygen may cause rapid combustion.

5.3. Advice for firefighters

Precautionary measures fire : In case of fire and/or explosion do not breathe fumes. In the event of fire, cool tanks with water spray. Move containers from fire area if you can do so without risk.

Firefighting instructions : Apply extinguishing media careful to avoid creating airborne dust.

Protection during firefighting : Wear full protective clothing and NIOSH approved self-contained breathing apparatus with full face piece, operated in positive pressure mode

SECTION 6: Accidental release measures

6.1. Personal precautions, protective equipment and emergency procedures

General measures : Handle in accordance with good industrial hygiene and safety practices. These practices include avoiding unnecessary exposure and removal of a material from eyes, skin, and clothing.

6.1.1. For non-emergency personnel

Protective equipment : Wear suitable protective clothing, gloves and eye/face protection. Use recommended respiratory protection.

Emergency procedures : Eliminate all ignition sources (no smoking, flares, sparks, or flames in immediate area). Take precautionary measures against static discharge. Use only non-sparking tools.

6.1.2. For emergency responders

No additional information available

6.2. Environmental precautions

Although this product is not classified as an environmentally hazardous material, large or frequent spills may cause potential problems.

6.3. Methods and material for containment and cleaning up

Methods for cleaning up : Small Spills: Sweep up or vacuum up spillage and collect in suitable container for disposal.
Large Spills: If sweeping of a contaminated area is necessary use a dust suppressant agent which does not react with the product. Collect dust using a vacuum cleaner equipped with HEPA filter. Avoid dispersal of dust in the air (i.e., clearing dust surfaces with compressed air). Minimize dust generation and accumulation. Prevent entry into waterways, sewer, basements or confined areas. Following product recovery, flush area with water.

6.4. Reference to other sections

Review section 7 (Handling and storage) of this safety data sheet before proceeding with clean-up

SECTION 7: Handling and storage

7.1. Precautions for safe handling

Additional hazards when processed : Do not breathe dust.

Precautions for safe handling : Avoid dispersion into air. Keep containers dry and closed. Follow good handling and housekeeping practices to minimize spills, generation of airborne dusts, and accumulation of dusts on exposed surfaces. Use with adequate exhaust ventilation to draw dust away from workers' breathing zones. Prevent or minimize exposures to dusts by using appropriate respirators, gloves and eye protection. Wash exposed skin areas thoroughly with soap and water. Use caution when pouring, using pneumatic transport, swirling, etc. As this material can become electrostatically charged and present a dust explosion hazard.

Hygiene measures : Handle in accordance with good industrial hygiene and safety procedures. Always wash your hands immediately after handling this product, and once again before leaving the workplace. Do not eat, drink or smoke in areas where product is used.

7.2. Conditions for safe storage, including any incompatibilities

Storage conditions : Store in a dry, cool place. Keep container tightly closed.

Incompatible material : Strong oxidizers such as ozone, liquid oxygen, chlorine, permanganate, etc.

Storage area : Store in dry, cool area.

Special rules on packaging : Keep container closed when not in use.

7.3. Specific end use(s)

Water treatment filter media

SECTION 8: Exposure controls/personal protection

8.1. Control parameters

Anthracite Carbon (8029-10-5)

	Result	OSHA 8 HR mg/m³	ACGIH TLV 8 HR mg/m³
Particulates not otherwise regulated (PNOR)	TWA	15(total)	-
		5 (respirable)	-
Particulates not otherwise classified (PNOC)	TWA	-	10 (inhalable)
		-	3 (respirable)

***Exposure limits have not been established for this material. The above are widely accepted limits for exposure to otherwise nontoxic particulates*

8.2. Exposure controls

Appropriate engineering controls : Provide ventilation if necessary to minimize exposure. General ventilation is usually acceptable, but local mechanical exhaust ventilation is preferred at sources of air contamination such as open process equipment.

Personal protective equipment : In case of dust productions; dustproof clothing. In case of dust production: protective goggles. Insufficient ventilation: wear respiratory protection. High dust production: self-contained breathing apparatus.

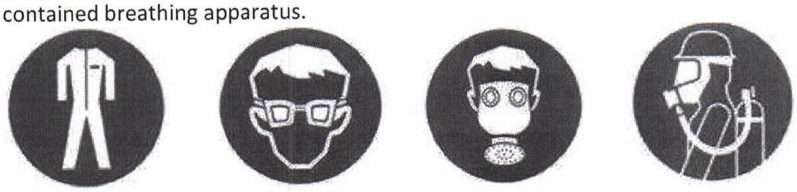

Hand protection : Wear appropriate dust resistant gloves

Eye protection : Safety glasses with side shields. If eye contact or dusty conditions are likely, wear dust tight goggles.

Skin and body protection : Avoid repeated or prolonged skin contact. Always wear appropriate dust resistant clothing and gloves.

Respiratory protection : If use conditions generate dust levels above TLV/PEL, wear a NIOSH-approved particulate respirator or a NIOSH-approved cartridge respirator fitted with dust filters.

Consumer exposure controls : Do not breathe dust. Wear recommended personal protective equipment.

SECTION 9: Physical and chemical properties

9.1. Information on basic physical and chemical properties

Appearance	: Black
Odor Threshold	: Not applicable
pH	: Not applicable
Melting Point/Freezing Point	: Not applicable
Initial Boiling Point/Range	: Not applicable
Flash Point	: Not applicable
Evaporation Rate	: Not applicable
Upper/Lower Flammability or Explosive Limit	: >220˚C
Vapor Pressure	: 0
Vapor Density (air = 1)	: Solid
Relative Density (water = 1)	: 0.4 to 0.7
Solubility	: Not Soluble
Auto-ignition Temperature	: >220˚C

9.2. Other information

Physical State : Solid

SECTION 10: Stability and reactivity

10.1. Reactivity

Not reactive under normal conditions of use

10.2. Chemical stability

Normally stable

10.3. Possibility of hazardous reactions

Not applicable

10.4. Conditions to avoid

Contact with strong oxidizers such as ozone, liquid oxygen, chlorine, permanganate, etc. may result in rapid combustion. Avoid contact with strong acids.

10.5. Incompatible materials

Oxidizers such as ozone, liquid oxygen, chlorine, permanganate, etc.

10.6. Hazardous decomposition products

Hazardous decomposition will produce carbon oxides

SECTION 11: Toxicological information

11.1. Information on toxicological effects

Likely Routes of Exposure : Eye, Skin contact, Inhalation, Ingestion

Acute toxicity :

Chemical Name	LC50	LD50 (oral)	LD50 (dermal)
Anthracite Carbon	Not applicable	Not applicable	Not applicable

Ingestion : Expected to be a low ingestion hazard

Inhalation : May cause damage to organs by inhalation
Excessive, long-term exposure by inhalation to coal dust may lead to a condition called workers' pneumoconiosis (or "Black Lung"). This condition may be characterized by cough, shortness of breath, reduction in pulmonary function, pulmonary hypertension, bronchitis, emphysema and premature death.

Skin Corrosion/Irritation : Skin contact is expected to be slightly irritating.

Serious Eye Damage/Irritation : Eye contact can cause conjunctivitis, epithelial hyperplasia of the cornea, as well as eczematous inflammation of the eyelids

STOT (Specific Target Organ Toxicity) – Single Exposure

- Inhalation : Not classified
- Skin Absorption : Not classified
- Ingestion : Not classified

Aspiration Hazard : Not available

STOT (Specific Target Organ Toxicity) – Repeated Exposure
May cause damage to organs through prolonged or repeated exposure

Respiratory and/or Skin Sensitization : May cause irritation on prolonged contact

Carcinogenicity : There are no known carcinogenic/mutagenic effects

Reproductive Toxicity

- Development of Offspring : Non-hazardous by WHMIS/OSHA criteria
- Sexual Function and Fertility : Non-hazardous by WHMIS/OSHA criteria

Germ Cell Mutagenicity : Non-hazardous by WHMIS/OSHA criteria

Other Effects : None Known

SECTION 12: Ecological information

12.1. Toxicity

The product is not classified as environmentally hazardous. However, this does not exclude the possibility that large or frequent spills can have a harmful or damaging effect on the environment.

12.2. Persistence and degradability

No data is available on the degradability of this product.

12.3. Bio accumulative potential

No data available

12.4. Mobility in soil

No data available

12.5. Other adverse effects

No other adverse effects (e.g. ozone depletion, photochemical ozone creation potential, endocrine disruption, global warming potential) are expected from this component

SECTION 13: Disposal considerations

13.1. Disposal methods

Review federal, state/provincial, and local government requirements prior to disposal. Collect and reclaim or dispose in sealed containers at licensed waste disposal site. This material and its container must be disposed of as hazardous waste. Do not allow this material to drain into sewers/water supplies. Do not contaminate ponds, waterways or ditches with chemical or used container. Dispose in accordance with all applicable regulations

SECTION 14: Transport information

Canada: TDG Proof of Classification: In accordance with Part 2.2.1 (SOR/2014-152) of the Transportation of Dangerous Goods Regulations, we certify that the classification of this product is correct as of the SDS date of issue. If applicable, the technical name and the classification of the product will appear below.

14.1. UN number

Not applicable to unused finished product

14.2. UN proper shipping name

Not applicable to unused finished product

14.3. Overland transport

Not applicable to unused finished product

14.4. Transport by sea

Not applicable to unused finished product

14.5. Air transport

Not applicable to unused finished product

14.6. Additional information

Not applicable to unused finished product

This material does not meet the definition of a self-heating substance (Class 4.2) as determined by the test protocol for a self-heating substance: United Nations Transportation of Dangerous Goods, Manual of Tests and Criteria, Part III, Section 33.3.1.6-Test N.4-Test Method for Self-Heating Substances.

SECTION 15: Regulatory information

15.1. US Federal regulations

This product is a "Hazardous Chemical" as defined by the OSHA Hazard Communication Standard, 29 CFR 1910.1200.

TSCA Section 12(b) Export Notification (40 CFR 707, Supt.D)	Not regulated
CERCLA Hazardous Substance List (40 CFR 302.4)	Not listed
Clean Air Act (CAA) Section 112® Accidental Release Prevention (40CFR 68.130)	Not regulated
Clean Air Act (CAA) Section 112 Hazardous Air Pollutants (HAPs) List	Not regulated
Hazard categories	Immediate Hazard – No Delayed Hazard – Yes Fire Hazard – No Pressure Hazard – No Reactivity Hazard - No
SARA 302 Extremely hazardous substance	Yes
SARA 311/312 Hazardous chemical	Yes
SARA 313 (TRI reporting)	Not regulated

15.2. International regulations

15.2.1. Canada

WHMIS status	Controlled
WHMIS classification	Class D Division 2 Subdivision B

WHMIS labeling	Class D2B
This product has been classified in accordance with the hazard criteria of the Controlled Products Regulations and the SDS contains all of the information required by the Controlled Products Regulations.	

15.2.2. National regulations

Country(s) or region	Inventory name	On inventory (yes/no)*
Canada	Domestic Substances List (DSL)	Yes
Canada	Non-Domestic Substances List (NDSL)	No
United States & Puerto Rico	Toxic Substances Control Act (TSCA) Inventory	Yes
*A "Yes" indicates that all components of this product comply with the inventory requirements administered by the governing country(s)		

15.3. US State regulations

U.S. - California - Proposition 65 - Carcinogen
Not Listed

U.S. – Texas – Effects Screening Levels: Listed Substance (Anthracite, Carbon CAS 8029-10-5 is listed)
U.S. - Massachusetts - Rights To Know List (Not regulated)
U.S. - Pennsylvania - RTK (Right to Know) List (Not regulated)
U.S. – Rhode Island – RTK (Right to Know) List (Not regulated)

SECTION 16: Other information

NFPA health hazard : 1 – Slightly hazardous
NFPA fire hazard : 1 – Materials will burn above 200°F
NFPA reactivity : 0 – Normally stable, even under fire exposure conditions, and are not reactive with water

Full text of H-phrases:

Carc. 1A	Carcinogenicity Category 1A
STOT RE 1	Specific target organ toxicity (repeated exposure) Category 1
STOT SE 3	Specific target organ toxicity (single exposure) Category 3
H303	May cause irritation if ingested
H315	May cause temporary skin irritation
H320	May cause eye irritation
H335	May cause respiratory irritation
H350	May cause cancer
H372	Causes damage to organs through prolonged or repeated exposure

Key to Abbreviations:

ACGIH®	American Conference of Governmental Industrial Hygienists
OSHA	US Occupational Safety and Health Administration
HSDB®	Hazardous Substances Data Bank

CAS No. 8029-10-5

The above information is believed to be accurate based on the most current data available and current as of the date of this Safety Data Sheet, and is offered in good faith. Carbon Enterprises Inc. makes no warranty; either expressed or implied, with respect to such information, and assumes no liability resulting from its use. Since the use of this information and of these opinions and the conditions of the use of the product are not within the control of Carbon Enterprises Inc., it is the user's obligation to determine the conditions of safe use of the product and the suitability of

each product or product combination for their own purposes. Carbon Enterprises Inc. shall not be liable for claims, losses or damages of any third party or for lost profits or incidental or consequential damages.

Project Name:	Wrangell WTP
Project Number:	17805
Document Name:	Filter Media - Highlighted Cutsheets
Document Number:	17805-ME-DAS-001
Rev:	A

Sand (Manufacturers Mineral Co.)

US Mesh	Sieve Size (mm)	Percentage Passing
100	0.15	0
40	0.425	0.9
35	0.5	5.46
30	0.6	22.96
25	0.71	58.56
20	0.85	94.03
16	1.18	100

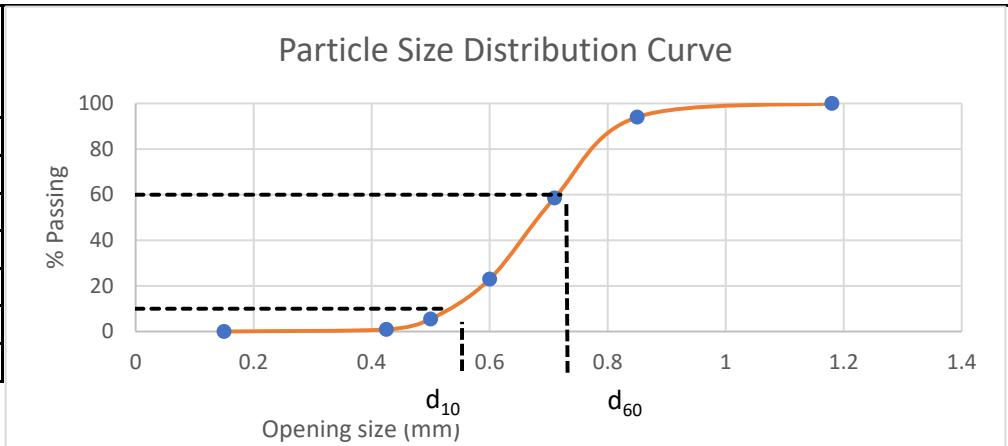

Uniformity Coefficient-d_{60}/d_{10}:	0.72/0.535: 1.35

The Tyler Standard Screen Scale

Form No. L-4
Please mention above when ordering

L-4

Cumulative Direct Diagram of Screen Analysis on Sample of _____

Name 0.45–0.55 MMRS Date

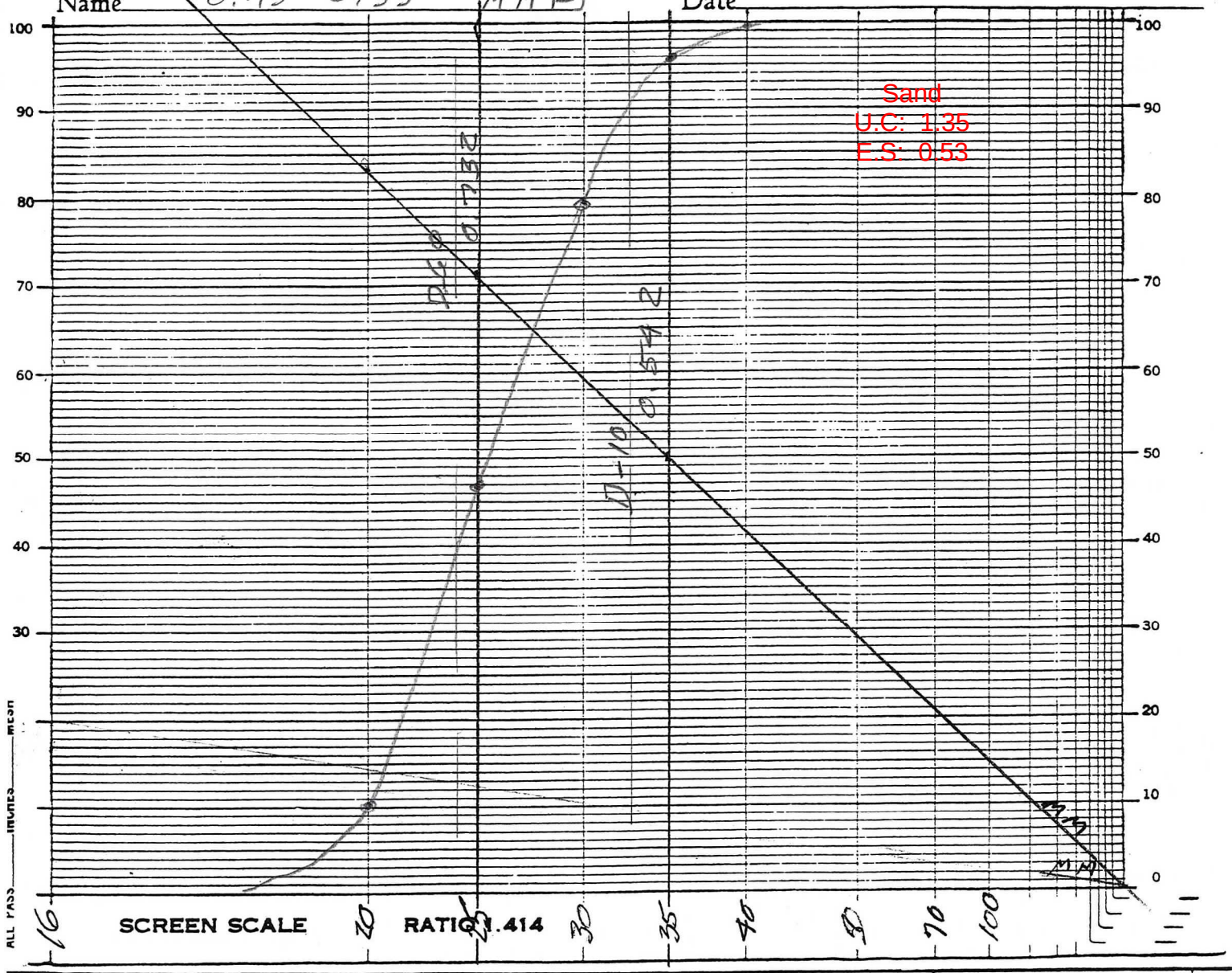

SCREEN SCALE RATIO 1.414												
Openings		Tyler Mesh	U. S. No.	Sample Weights	Per Cent	Per Cent Cumulative Weights	Sample Weights	Per Cent	Per Cent Cumulative Weights	Sample Weights	Per Cent	Per Cent Cumulative Weights
Inches	Millimeters											
1.050	26.67											
.742	18.85											
.525	13.33											
.371	9.423											
.263	6.680	3										
.185	4.699	4	4									
.131	3.327	6	6									
.093	2.362	8	8									
.065	1.651	10	12									
.046	1.168	14	16									
.0328	.833	20	20			10.26						
.0232	.589	28	30	25→	46.72	79.39						
.0164	.417	35	40	35→	95.52	99.57						
.0116	.295	48	50									
.0082	.208	65	70									
.0058	.147	100	100		ES→	0.542						
.0041	.104	150	140		UC→	1.35						
.0029	.074	200	200									
.0029	.074	200	200									
			Totals,									

The Public Health and Safety Organization

NSF Product and Service Listings

These NSF Official Listings are current as of **Monday, June 08, 2015** at 12:15 a.m. Eastern Time. Please contact NSF International to confirm the status of any Listing, report errors, or make suggestions.

Alert: NSF is concerned about fraudulent downloading and manipulation of website text. Always confirm this information by clicking on the below link for the most accurate information: http://info.nsf.org/Certified/PwsComponents/Listings.asp?Company=04950&

NSF/ANSI 61
Drinking Water System Components - Health Effects

NOTE: Unless otherwise indicated for Materials, Certification is only for the Water Contact Material shown in the Listing. Click here for a list of Abbreviations used in these Listings. Click here for the definitions of Water Contact Temperatures denoted in these Listings.

Manufacturers Mineral Company
1215 Monster Road SW
Renton, WA 98057
United States
425-228-2120
Visit this company's website

Facility : Renton, WA

Process Media

Trade Designation	Size	Water Contact Temp	Water Contact Material
Sand/Gravel			
Filter Media	[1]	CLD 23	SLDOX
Processed Natural Sand and Gravel	[1]	CLD 23	SLDOX

[1] All sizes and gradations.

NOTE: Certified for water treatment plant applications.
This product has not been evaluated for point of use applications.

Number of matching Manufacturers is 1

Number of matching Products is 2

Processing time was 0 seconds

PROJECT NAME: Wrangell WTP

PROJECT NO.: 17805

DOCUMENT NAME: Recycle Pump - Highlighted Cutsheets

DOCUMENT NO.: 17805-ME-DAS-002

A	10-Jan-23	Issued for Review	JE	VD	AA
Rev	**Date**	**Revision Description**	**Originator**	**Checker**	**Approver**

GRUNDFOS

Company name:
Created by:
Phone:

Date: 8/8/2022

Count	Description
1	**CR 15-4 A-GJ-A-E-HQQE**

Recycle Pumps
Tag Numbers:
- 02-P-120
- 02-P-220
- 02-P-320

Product No.: On request

Vertical, multistage centrifugal pump with inlet and outlet ports on same the level (inline). The pump head and base are in cast iron – all other wetted parts are in stainless steel. A cartridge shaft seal ensures high reliability, safe handling, and easy access and service. Power transmission is via a rigid split coupling. Pipe connection is via combined ANSI-JIS flanges.

The pump is fitted with a 3-phase, fan-cooled asynchronous motor.

Liquid:

Pumped liquid:	Water
Liquid temperature range:	-4 .. 248 °F
Selected liquid temperature:	68 °F
Density:	62.29 lb/ft³
Kinematic viscosity:	1 cSt

Technical:

Rated pump speed:	3467 rpm
Actual calculated flow:	84.1 US gpm
Resulting head of the pump:	221.5 ft
Actual impeller diameter:	4.13 in
Pump orientation:	Vertical
Shaft seal arrangement:	Single
Code for shaft seal:	HQQE
Approvals:	CURUS
Approvals for drinking water:	NSF/ANSI 61
Curve tolerance:	ISO9906:2012 3B

Materials:

Base:	Cast iron EN 1561 EN-GJL-200 ASTM A48-25B
Impeller:	Stainless steel EN 1.4301 AISI 304
Bearing:	SIC

Installation:

t max amb:	104 °F
Maximum operating pressure:	232.06 psi
Max pressure at stated temperature:	232 psi / 250 °F 232 psi / -4 °F
Type of connection:	ANSI / JIS
Size of inlet connection:	DN 50
Size of outlet connection:	DN 50
Pressure rating for connection:	PN 25
Flange rating inlet:	300 lb
Flange size for motor:	213TC

Electrical data:

Motor standard:	NEMA
Motor type:	WEG
IE Efficiency class:	IE3 / NEMA Premium
Rated power - P2:	7.5 HP
Power (P2) required by pump:	7.5 HP
Main frequency:	60 Hz
Rated voltage:	3 x 208-230/460 V
Service factor:	1.15

GRUNDFOS

Company name:
Created by:
Phone:

Date: 8/8/2022

Count	Description	
1	Rated current:	19,2-17,3/8,67 A
	Starting current:	760-760 %
	Cos phi - power factor:	0.89
	Rated speed:	3530 rpm
	IE efficiency:	IE3 89,5%
	Motor efficiency at full load:	89.5 %
	Motor efficiency at 3/4 load:	88.5 %
	Motor efficiency at 1/2 load:	87.5 %
	Number of poles:	2
	Enclosure class (IEC 34-5):	IP55
	Insulation class (IEC 85):	F
	Motor Number:	99882381
	Controls:	
	Frequency converter:	NONE
	Others:	
	DOE Pump Energy Index CL:	0.91
	Net weight:	240 lb
	Gross weight:	256 lb
	Shipping volume:	13.1 ft³

Type keys

CR(E), CRI(E), CRN(E)

Example	CR	15		4		A	GJ	A	E	HQQE
	CR	E	32	(s)	4	2	A	F	G	E	HQQE

- Type range: CR, CRI, CRN
- Pump with integrated frequency converter
- Flow rate [m^3/h]
- All impellers with reduced diameter (applies only to CR, CRI, CRN 1s)
- Number of impellers
- Number of reduced-diameter impellers (CR(E), CRN(E) 32, 45, 64, 90, 120 and 150)
- Code for pump version
- Code for pipe connection
- Code for materials
- Code for rubber parts
- Code for shaft seal

Codes

Example	A	-F	-A	-E	-H	QQ	E

Pump version

A	Basic version
B	Oversize motor
E	Pump with certificate/approval
F	CR pump for high temperatures (air-cooled top assembly)
H	Horizontal version
HS	High-pressure pump with high-speed MGE motor
I	Different pressure rating
J	Pump w/different max. speed
K	Pump with low NPSH
M	Magnetic drive
N	Fitted with sensor
P	Undersize motor
R	Horizontal version with bearing bracket
SF	High-pressure pump
X	Special version

Pipe connection

A	Oval flange
B	NPT thread
CA	FlexiClamp (CRI(E), CRN(E) 1, 3, 5, 10, 15, 20)
F	DIN flange
G	ANSI flange
J	JIS flange
N	Changed diameter of ports
P	PJE coupling
X	Special version

Materials

A	Basic version
D	Carbon-graphite-filled PTFE (bearings)
G	Wetted parts of 1.4401/AISI 316
GI	All parts of stainless steel, wetted parts of 1.4401/AISI 316
I	Wetted parts of 1.4301/AISI 304
II	All parts of stainless steel, wetted parts of 1.4301/AISI 304
K	Bronze (bearings)
S	SiC bearings + PTFE neck rings
X	Special version

Code for rubber parts

E	EPDM
F	FXM
K	FFKM
V	FKM

Shaft seal

H	Balanced cartridge seal
Q	Silicon carbide
U	Tungsten carbide
B	Carbon
E	EPDM
F	FXM
K	FFKM
V	FKM

GRUNDFOS

Company name:
Created by:
Phone:

Date: 8/8/2022

On request CR 15-4 A-GJ-A-E-HQQE 60 Hz

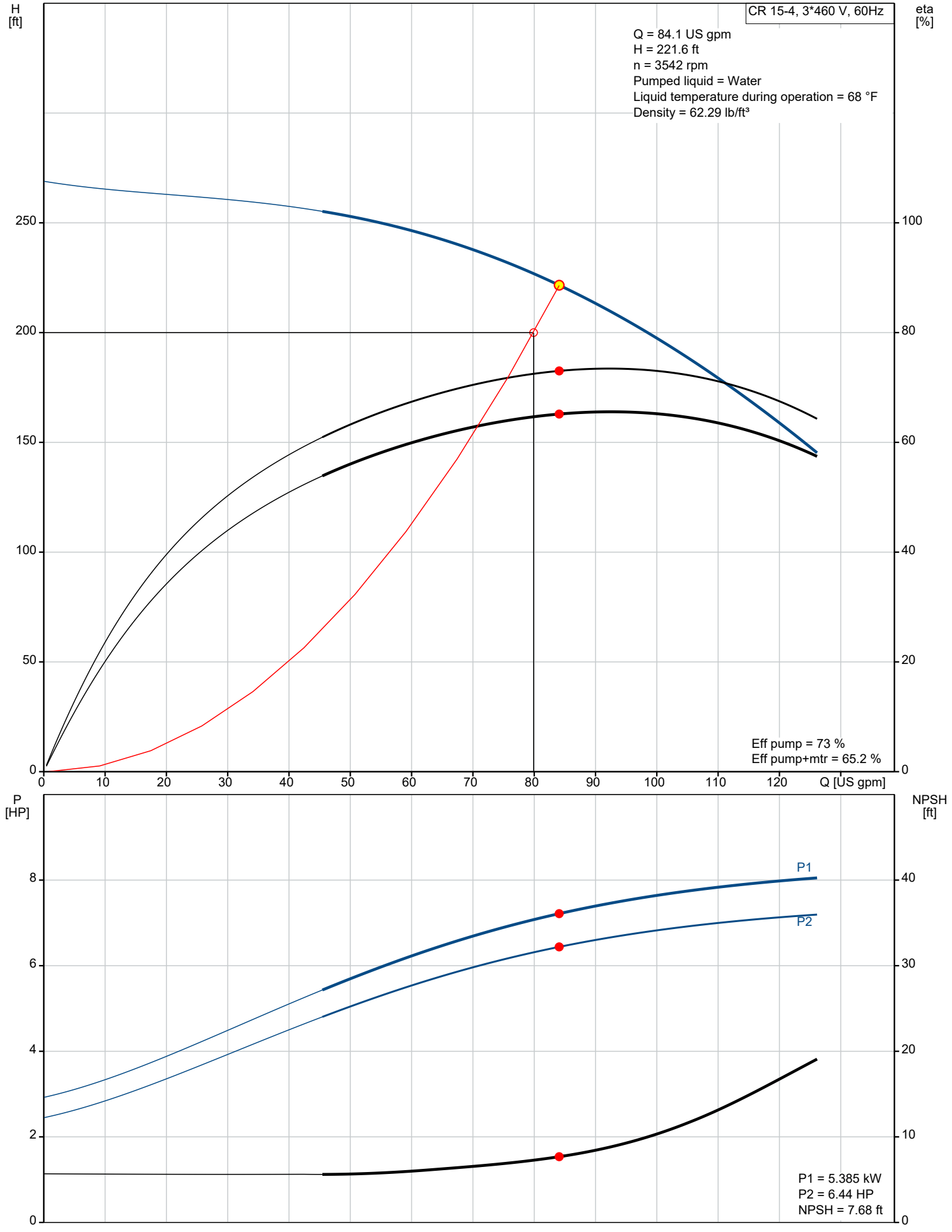

Company name:
Created by:
Phone:

Date: 8/8/2022

On request CR 15-4 A-GJ-A-E-HQQE 60 Hz

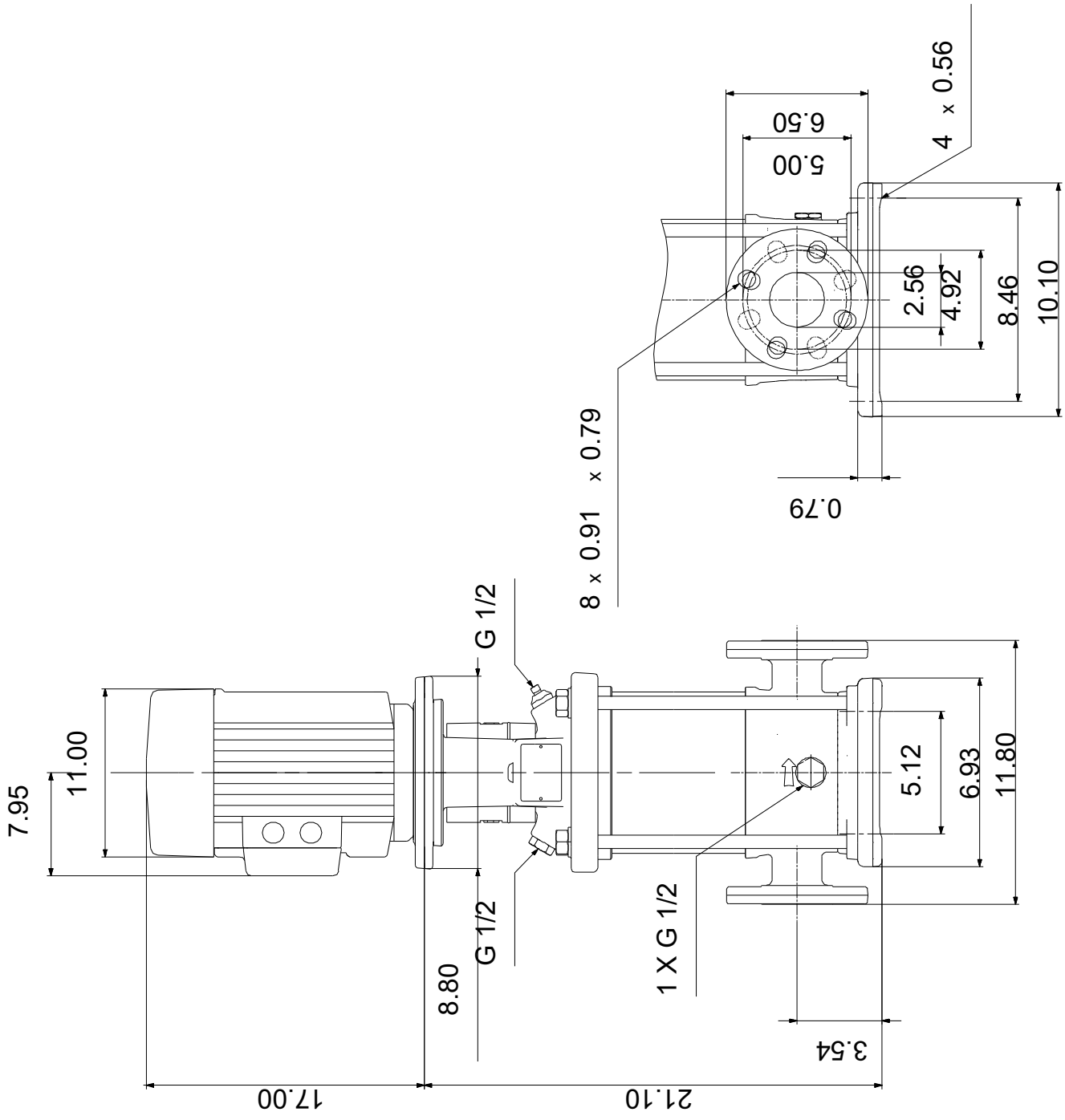

Note! All units are in [in] unless otherwise stated.
Disclaimer: This simplified dimensional drawing does not show all details.

PROJECT NAME: Wrangell WTP

PROJECT NO.: 17805

DOCUMENT NAME: Air Compressor - Highlighted Cutsheets

DOCUMENT NO.: 17805-ME-DAS-003

B	14-Feb-23	Issued for Review	JE	TEC	AA
A	10-Jan-23	Issued for Review	JE	VD	AA
Rev	**Date**	**Revision Description**	**Originator**	**Checker**	**Approver**

ENGINEERING DATA SHEET

Air Compressor
Tag Numbers:
- 08-AC-810
- 08-AC-820

Reciever:
08-REC-815

2475

(Packaged and Configured)

Ingersoll Rand
Industrial Technologies

CCN: 47725347
Rev: A ECO 1421515
Page: 1 of 3
Date: 28-Jan-21

Point of Manufacture - Campbellsville

Bare Details:

Specifications:

Bore:	4" & 2.5"
Stroke:	2.75"
Maximum pressure :	250(17.24) psig(bar)
Sheave OD:	13.75"
Sheave PD:	13.5"
Inlet size:	1" NPT
Discharge size:	0.5" NPT
Belt Type / Quantity:	A/1
Min/Max RPM:	575/1600
Air-cooled Aftercooler CTD:	25°F

Lubrication:

Types:	*XL300; **All-Season T30 Select; ***XL740Ht
Sump capacity:	1.30(1.23) qt(liter)

*Adjust viscosity to suit ambient conditions, XL300 should not be used in ambients below 40°F. Use premium quality, non-detergent, single-viscosity petroleum oils with R & O additives.
** Required for duty cycles above 70% load. Check lubricant compatibility sheet before using.
*** Required for ambients in excess of 100°F. Check lubricant compatibility sheet before using.

Tank Details:

Tank size / Configuration:	30 Gal/Horizontal (Gas Only) 80 Gal/Vertical 80 Gal/Horizontal 120 Gal/Horizontal (Duplex Only)
Pressure rating:	200(13.8) psig(bar)
Codes:	ASME Sec VIII & CRN

Drive Details:

AMP draw:

B

	200-1-60	230-1-60	200-3-60	230-3-60	460-3-60	575-3-60
5HP	32.2	28	17.5	15.2	7.6	6.1
7.5HP		40	25.3	22.0	11	9.0

Note: Nominal Amps are based on NEC full load amperage rating for this size motor. Actual nameplate amps may vary according to motor design and/or motor manufacturer. Duplexes have the potential to run both motors at the same time, in this instance double the amp draw value.

	5 HP	7.5 HP (Simplex)	7.5 HP (Duplex)	13 HP (Gas)	14 HP (Gas)	9.3 HP (Diesel)
(Packaged = P; Configured = C)	P;C	P;C	P;C	P	P	P
Efficiency	*	*	*	N/A	N/A	N/A
Motor RPM	1775	3450	1775	3600	3600	3600

* Motors comply with EISA standards.

2475

Ingersoll Rand
Industrial Technologies

CCN: 47725347

Performance Data:

Bare (Packaged = P; Configured = C)	Power (HP)	Pressure (psig)	Pump Speed (rpm)	Flow (acfm)	BHP
2475 (P;C)	5	75	1040	17.3	4.5
2475 (P;C)	5	125	1040	17.1	4.8
2475 (P;C)	5	175	1040	16.8	5.5
H2475 (C)	5	250	910	14.1	5.2
2475 (P;C)	7.5	75	1500	24.3	7.3
2475 (P;C)	7.5	125	1500	24.2	7.8
2475 (P;C)	7.5	175	1500	24.0	8.1
2475 - Gas-Honda (P)	13	175	1600	25.0	8.2
2475 - Gas-Kohler (P)	14	175	1600	25.0	8.2
2475 - Diesel-Yanmar (P)	9.3	175	1415	22.6	7.6

Note: Duplex units multiply capacity by two when both units are running.

Operating Environment:

Minimum operating temperature:	32(0)	deg.F(deg.C)
Maximum operating temperature:	100(37.78)	deg.F(deg.C)

Electricals:

	Fully Packaged	Configured
Magnetic starter:	E-Series standard	E-Series standard; Deluxe optional
Pressure switch:	Non-adjustable standard	Non-adjustable standard; Adjustable optional
Alternator:	E-Series standard	E-Series standard; Deluxe optional

Dimensions & Shipping weight:

	5 HP 80 Gal. Vertical	5 HP 80 Gal. Horizontal	5 HP (Duplex) 120 Gal. Horizontal
L x W x H (in):	48 x 40 x 76	74 x 43 x 49	88 x 60 x 60
Weight (lbs):	670	500	1300

	7.5 HP 80 Gal. Vertical	7.5 HP 80 Gal. Horizontal	7.5 HP (Duplex) 120 Gal. Horizontal
L x W x H (in):	48 x 40 x 76	74 x 43 x 49	88 x 60 x 60
Weight (lbs):	675	525	1350

	Gas Engine Driven 30 Gal. Horizontal	Diesel Engine Driven 30 Gal. Horizontal	Gas Engine Driven Baseplate
L x W x H (in):	48 x 22 x 41	48 x 22 x 45	48 x 27 x 22
Weight (lbs):	455	515	390

Note: For model specific dimensions and weight, reference GA drawings.

2475

Ingersoll Rand
Industrial Technologies

Notes:
1) For specific code requirements like CSA, CRN, ASME contact your channel marketing manager.
2) For model specific GA, electrical schematic and fluid flow schematic or any specific information contact your channel marketing manager.

SPECIAL OPTIONS/FEATURES NOT AVAILABLE ON THESE UNITS

REVISIONS						
ZONE	REV	ECN	DESCRIPTION	DATE	DWN	APV
	A	09R00622	INITIAL RELEASE	2009NOV05	G.LEVI	J.BALLARD

NOTES:

1. FOUNDATION OR FLOOR MUST BE LEVEL AND SUPPORT ALL FEET EQUALLY; IF NECESSARY SHIM OR GROUT THE FOURTH FOOT.
2. FOUNDATION BOLTS SHOULD PROJECT THRU NUTS AT LEAST 1/2"[13] TO ALLOW FOR LEVELING.
3. ALLOW AT LEAST 12.00[305] CLEARANCE MIN. ON ALL SIDES FOR PROPER AIR CIRCULATION.
4. DIMENSIONS IN [ ] ARE MILLIMETER DIMENSIONS UNLESS OTHERWISE SPECIFIED.
5. ALL UNSPECIFIED TOLERANCES: XX = ±.25[6]
   X = ±.50[13]
6. THE COMPRESSOR ARRANGEMENT SHOWN IS REPRESENTATIVE OF ALL THE UNITS LISTED.

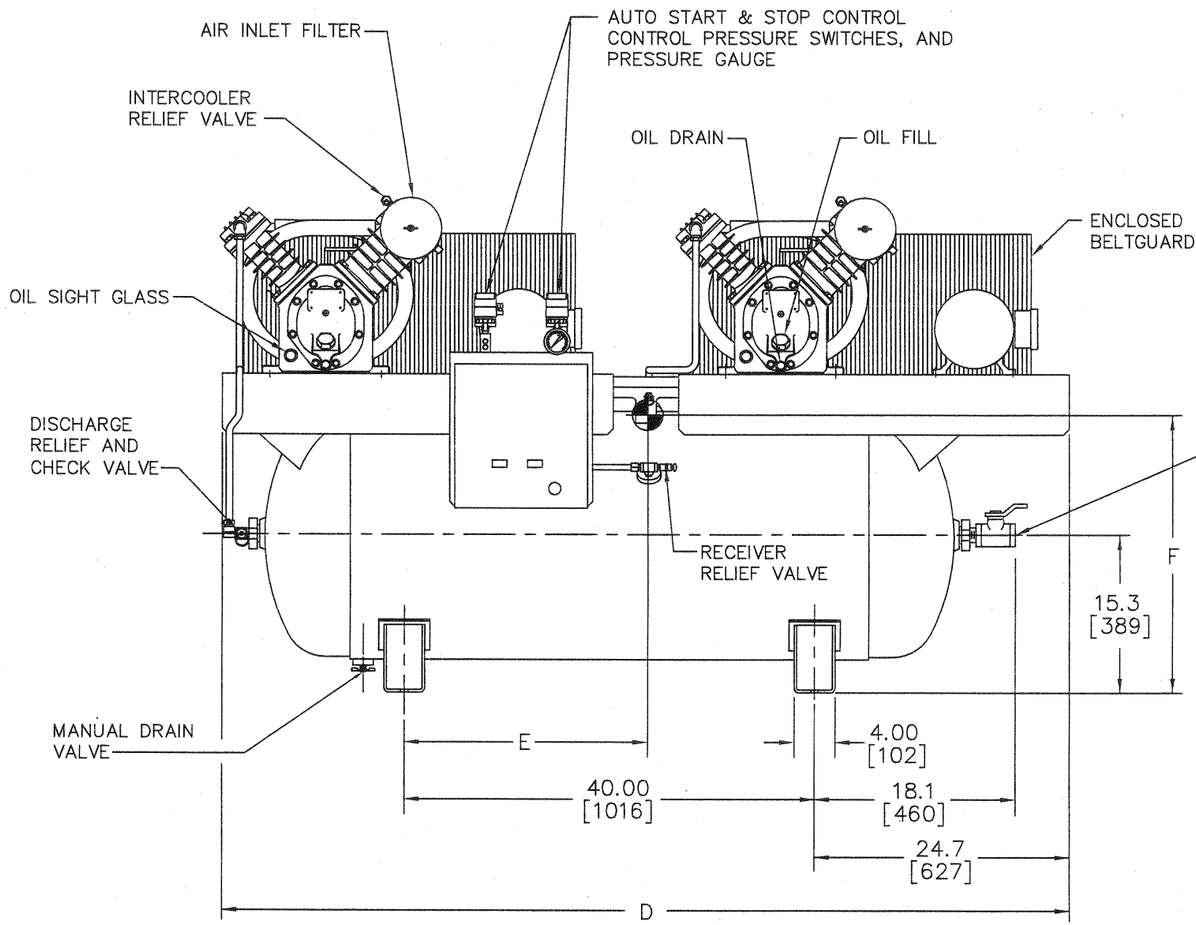

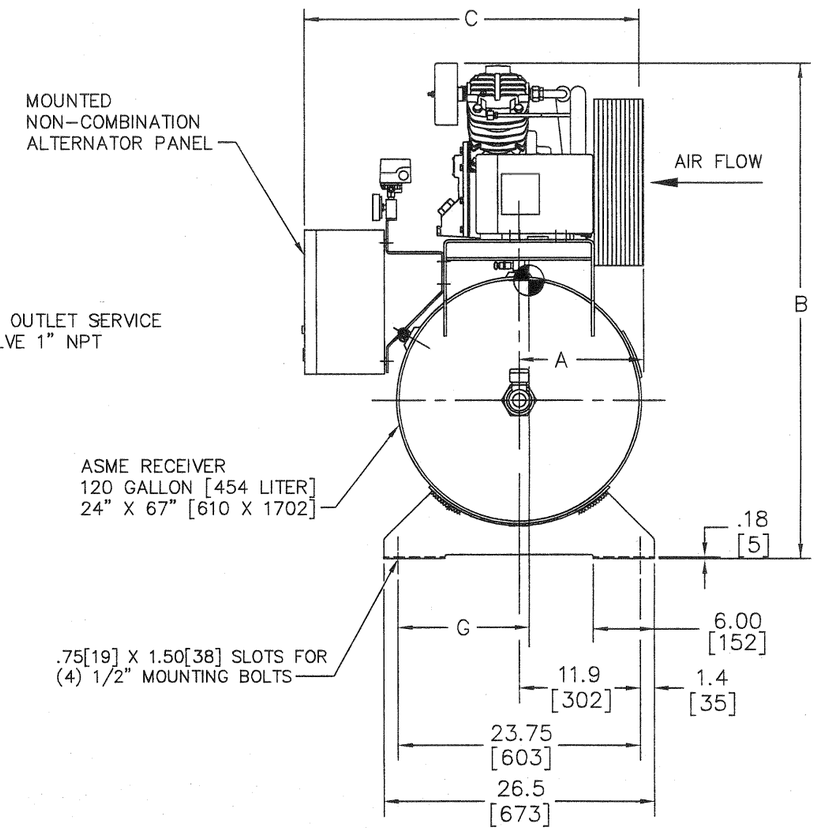

MODEL	NET WT. LBS [WT. KG]	A	B	C	D	E	F	G
2-2475E5V	1250 [567]	12.2 [310]	48.2 [1223]	32.7 [830]	82.3 [2090]	22.0 [559]	27.0 [686]	12.8 [325]
2-2475E7.5V	1275 [578]	12.2 [310]	48.2 [1223]	32.7 [830]	82.3 [2090]	22.6 [574]	27.4 [697]	12.9 [328]
2-2545E10V	1530 [694]	11.6 [294]	51.5 [1308]	32.5 [825]	87.3 [2217]	20.6 [524]	30.9 [786]	13.2 [335]

PROPRIETARY NOTICE

THIS DOCUMENT CONTAINS CONFIDENTIAL AND TRADE SECRET INFORMATION, IS THE PROPERTY OF INGERSOLL-RAND COMPANY, AND IS GIVEN TO THE RECEIVER IN CONFIDENCE. THE RECEIVER BY RECEPTION AND RETENTION OF THE DOCUMENT ACCEPTS THE DOCUMENT IN CONFIDENCE AND AGREES THAT, EXCEPT AS AUTHORIZED IN WRITING BY INGERSOLL-RAND COMPANY, IT WILL (1) NOT USE THE DOCUMENT OR ANY COPY THEREOF OR THE CONFIDENTIAL OR TRADE SECRET INFORMATION THEREIN; (2) NOT COPY THE DOCUMENT; (3) NOT DISCLOSE TO OTHERS EITHER THE DOCUMENT OR THE CONFIDENTIAL OR TRADE SECRET INFORMATION THEREIN; AND (4) UPON COMPLETION OF THE NEED TO RETAIN THE DOCUMENT, OR UPON DEMAND, RETURN THE DOCUMENT, ALL COPIES THEREOF, AND ALL MATERIAL COPIED THEREFROM.

Copyright © 1992 Ingersoll-Rand Company All Rights Reserved

WARNING: The export or reexport of this drawing or a product produced by this drawing is subject to U.S. Export Administration Regulations and other applicable governmental restrictions or regulations.

THIRD ANGLE PROJECTION

SCALE NONE

DRAWN	G.Levi	2009NOV05
CHECKED	D.Adams	2009NOV05
APPROVED	J.Ballard	2009NOV05

Ingersoll Rand

REF. VALUE PACKAGES

TITLE GENERAL ARRANGEMENT
2-2475E5V, 2-2475E7.5V & 2-2545E10V

SIZE A1 | DWG NO. 45469830 | REV A

SHEET 1 OF 1

DESIGN PARAMETERS:
DESIGN PRESSURE: 20.7 BARG (300 PSIG)
DESIGN TEMPERATURE: 100°C (212°F)

WORKING PARAMETERS
MAXIMUM WORKING PRESSURE: SEE TABLE
MAXIMUM WORKING TEMPERATURE: 80°C (176°F) - G & H GRADES (WITH AUTODRAIN)
100°C (212°F) - G, H, & D GRADES (WITHOUT AUTODRAIN)
30°C (86°F) - A GRADE

FILTRATION GRADES:

GRADE G:
GENERAL PURPOSE PROTECTION
PARTICLE REMOVAL DOWN TO 0.1 MICRON INCLUDING WATER & OIL AEROSOLS
MAXIMUM REMAINING OIL AEROSOL CONTENT:
0.03 mg/m^3 AT 21°C / 0.03 PPM(W) AT 70°F

GRADE H:
HIGH EFFICIENCY OIL REMOVAL FILTRATION
(PRECEDE WITH GRADE G FILTER)
PARTICLE REMOVAL DOWN TO 0.01 MICRON INCLUDING WATER & OIL AEROSOLS
MAXIMUM REMAINING OIL AEROSOL CONTENT:
0.01 mg/m^3 AT 21°C / 0.008 PPM(W) AT 70°F

GRADE A:
OIL VAPOUR AND ODOUR REMOVAL
(PRECEDE WITH GRADES G & H FILTERS)
MAXIMUM REMAINING OIL VAPOUR CONTENT:
0.003 mg/m^3 AT 21°C / 0.003 PPM(W) AT 70°F

GRADE D:
GENERAL PURPOSE DUST PROTECTION
DRY PARTICLE REMOVAL DOWN TO 1 MICRON

"FILTER ASSEMBLIES TO HAVE CANADIAN REGISTRATION NUMBER – (CRN)"

Filters
Tag Numbers:
- 08-F-816 - Grade G
- 08-F-817 - Grade H
- 08-F-818 - Grade A

REVISIONS

ZONE	REV	ECN	DESCRIPTION	DATE	DRAWN	APP'D
	A	81393	ORIGINAL REREASE	04.01.2013	B.PFAJFAR	J.JAKOP
	B	81650	REVISED TITLE BLOCK NOMENCLATURE FROM FC TO FA; REVISED TABLE MODEL F TO FA	26.03.2013	B.PFAJFAR	J.JAKOP
	C	82811	REVISED FILTRATION GRADES (grade G) Oil content 0.6 mg/m3 / 0.5 PPM(W) TO 0.03 mg/m3 / 0.03 PPM(W); ADD MANUAL DRAIN OPTION NPT THREAD FORM; REVISED TABLE FILTER NPT WITH MANUAL DRAIN BSP (CCN 24335036) TO NPT (CCN 24623803)	12.11.2013	B.PFAJFAR	J.JAKOP
	D	82811	REVISED FILTER DIMESION: 281mm to 280mm, 206mm to 205mm	13.05.2014	B.PFAJFAR	J.JAKOP
	E	82813	REVISED FILTRATION GRADES (grade G) 1 micron to 0,1 micron REVISED FILTRATION GRADES (grade H) 0,01 PPM(W) to 0,008 PPM(W)	07.07.2014	B.PFAJFAR	J.JAKOP
	F	82947	Add note about Canadian registration number (CRN)	02.12.2014	B.PFAJFAR	J.JAKOP
	G	83323	Add inch dimensions on drawings	23.3.2015	B.PFAJFAR	J.JAKOP

MANUAL DRAIN OPTION

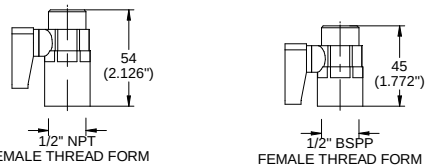

MODEL	FILTER CCN	PORT SIZE	ELEMENT CCN	MAX. WORKING PRESSURE	FLOW scfm	FLOW l/s	FLOW m3/h	DRAIN	DRAIN CCN	HOUSING O-RING CCN	DIFFERENTIAL GAUGE
FA75IG	24231953	3/4" BSPT	24241895	17,25 barG (250 psiG)	45	21	76	AUTODRAIN	24335028	24334955	24335044
FA75IH	24231987	3/4" BSPT	24241903	17,25 barG (250 psiG)	45	21	76	AUTODRAIN	24335028	24334955	24335044
FA75IA	24231912	3/4" BSPT	24241861	17,25 barG (250 psiG)	45	21	76	MANUAL	24335036	24334955	N/A
FA75ID	24231938	3/4" BSPT	24241879	17,25 barG (250 psiG)	45	21	76	MANUAL	24335036	24334955	24335044
FA75IG	24233363	3/4" NPT	24241895	17,25 barG (250 psiG)	45	21	76	AUTODRAIN	24335028	24334955	24335051
FA75IH	24233389	3/4" NPT	24241903	17,25 barG (250 psiG)	45	21	76	AUTODRAIN	24335028	24334955	24335051
FA75IA	24233322	3/4" NPT	24241861	17,25 barG (250 psiG)	45	21	76	MANUAL	24623803	24334955	N/A
FA75ID	24233348	3/4" NPT	24241879	17,25 barG (250 psiG)	45	21	76	MANUAL	24623803	24334955	24335051
FA110IG	24233124	3/4" BSPT	24241952	17,25 barG (250 psiG)	65	31	110	AUTODRAIN	24335028	24334955	24335044
FA110IH	24232050	3/4" BSPT	24241960	17,25 barG (250 psiG)	65	31	110	AUTODRAIN	24335028	24334955	24335044
FA110IA	24232001	3/4" BSPT	24241929	17,25 barG (250 psiG)	65	31	110	MANUAL	24335036	24334955	N/A
FA110ID	24232027	3/4" BSPT	24241937	17,25 barG (250 psiG)	65	31	110	MANUAL	24335036	24334955	24335044
FA110IG	24233447	3/4" NPT	24241952	17,25 barG (250 psiG)	65	31	110	AUTODRAIN	24335028	24334955	24335051
FA110IH	24233462	3/4" NPT	24241960	17,25 barG (250 psiG)	65	31	110	AUTODRAIN	24335028	24334955	24335051
FA110IA	24233405	3/4" NPT	24241929	17,25 barG (250 psiG)	65	31	110	MANUAL	24623803	24334955	N/A
FA110ID	24233421	3/4" NPT	24241937	17,25 barG (250 psiG)	65	31	110	MANUAL	24623803	24334955	24335051

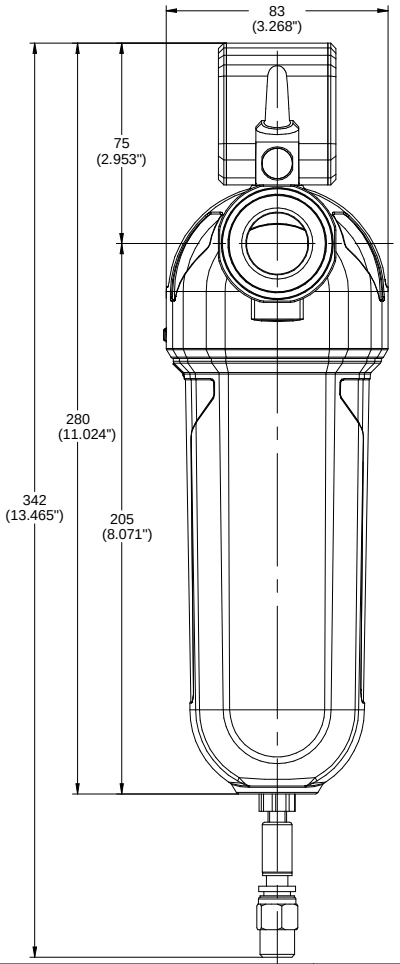

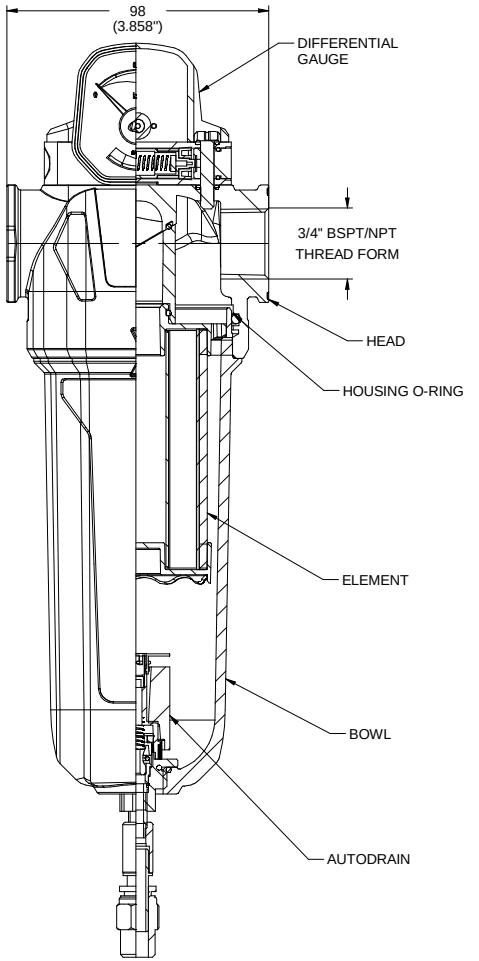

PLURIFILTER		SEE TABLE
MFR NAME	ADDRESS	PART NO.

- ONLY THE ITEM DESCRIBED ON THIS DRAWING WHEN PROCURED FROM THE MANUFACTURER(S) LISTED HEREON IS APPROVED.
A SUBSTITUTE ITEM SHALL NOT BE USED WITHOUT WRITTEN APPROVAL BY THE INGERSOLL-RAND COMPANY.
- THIS PART SHALL BE LABELED WITH THE I-R NAME AND PART NUMBER. NO SUPPLIER INFORMATION OR SUPPLIER LABELING SHOULD APPEAR ON THE PART OR PART PACKAGING. IF THE PART SIZE AND/OR SHAPE PREVENT PRIVATE LABELING, THE PART SHOULD HAVE NO IDENTIFICATION OF ANY TYPE ON THE PART.

APPROVED SOURCES OF SUPPLY

STANDARD TOLERANCES

ALL DIMENSIONS ARE IN MILLIMETERS [INCHES (IF SHOWN)]

UNSPECIFIED TOLERANCES:

WHOLE	± 1
ONE PLACE (.X)	± 0.5
TWO PLACE (.XX)	± 0.25
ANGLES (.X)	± 1°

Ingersoll-Rand Industrial Technologies

WARNING: THE EXPORT OR REEXPORT OF THIS DRAWING OR A PRODUCT PRODUCED BY THIS DRAWING IS SUBJECT TO U.S. EXPORT ADMINISTRATION REGULATIONS AND OTHER APPLICABLE GOVERNMENT RESTRICTIONS OR REGULATIONS.

PROPRIETARY NOTICE

THIS DRAWING CONTAINS CONFIDENTIAL AND TRADE SECRET INFORMATION, IS THE PROPERTY OF INGERSOLL-RAND CO., AND IS GIVEN TO THE RECEIVER IN CONFIDENCE. THE RECEIVER BY RECEPTION AND RETENTION OF THE DRAWING ACCEPTS THE DRAWING IN CONFIDENCE AND AGREES THAT, EXCEPT AS AUTHORIZED IN WRITING BY INGERSOLL-RAND CO. IT WILL (1) NOT USE THE DRAWING OR ANY COPY THEREOF OR THE CONFIDENTIAL OR TRADE SECRET INFORMATION THEREIN; (2) NOT COPY THE DRAWING; (3) NOT DISCLOSE TO OTHERS EITHER THE DRAWING OR THE CONFIDENTIAL OR TRADE SECRET INFORMATION THEREIN; AND (4) UPON COMPLETION OF THE NEED TO RETAIN THE DRAWING, OR UPON DEMAND, RETURN THE DRAWING, ALL COPIES THEREOF, AND ALL MATERIAL COPIED THEREFROM.

DO NOT SCALE DRAWING

DRAWING CONFORMS TO ASME Y14.5M - 1994

CAD GENERATED DRAWING, NO MANUAL REVISIONS ALLOWED

UNLESS OTHERWISE SPECIFIED:
- REMOVE ALL BURRS AND SHARP CORNERS
- WELD SYMBOLS TO BE IN ACCORDANCE WITH ANSI//AWS A2.4

COPYRIGHT @ 2008
INGERSOLL-RAND COMPANY
ALL RIGHTS RESERVED

THIRD ANGLE PROJECTION

DRAWN	PFAJFAR	DATE 01.12. 2012
CHECKED	JAKOP	DATE 04.01. 2012
APPROVED	JAKOP	DATE 04.01. 2012

Ingersoll Rand

TITLE: **FILTER INDEX, DRYER FILTER FA75I, FA110I (W/DRAIN)**

SIZE	ESTIMATED WEIGHT (KG UNLESS OTHERWISE SPECIFIED)	DRW NO.	REV
A1	0.0	24333072	G

SCALE 0.50 | UNIT - | SHEET 1 OF 1

UNLESS OTHERWISE SPECIFIED PRINTED DOCUMENT IS UNCONTROLLED

PROJECT NAME: Wrangell WTP

PROJECT NO.: 17805

DOCUMENT NAME: Flocculators - Highlighted Cutsheets

DOCUMENT NO.: 17805-ME-DAS-004

A	10-Jan-23	Issued for Review	JE	VD	AA
Rev	**Date**	**Revision Description**	**Originator**	**Checker**	**Approver**

\\srv-fs01\shared\Shared\Customers\CRW Engineering\17805 Wrangell AK\5 Engineering\5.12 Mech\5.12.D Datasheets\2. Flocculators

AFRICA | NORTH AMERICA | EUROPE

Agitator Specification

TagNo: 02-MX-103/203/303

Quote Ref: 22/CA/2882

Description: Stage-1 Flocculator Chamber

Client	AWC Solutions	Project Ref	Flash Mixer
Qty	3		

Liquid SG	0.00	tons/m³
Solids SG	0.00	tons/m³
Slurry SG	1.00	tons/m³
Operating Pressure	0.0	kPa
Operating Temp	35	C
Ambient Temp	35	C
Tank Open	Yes	
Solids %	0	%
Particle Size	0	um
Viscosity	1	cps
Gas Rate	0.000	Nm³/h
Volume	24.92	m³
Diameter	3,076	mm
Width / Length	3,048 / 2,438	mm
Height	3,658	mm
Beam Height	203	(Nom)
Top Shape	Flat	
Bottom Shape	Flat	

Mounting: Central

Colour	RAL 3001(Signal-Red), total layer thickness at least 150um	
Weight	81	kg
Bending Moment	1.50	kNm
Torque	0.15	kNm
Vert	3.34	kN
Critical Speed	118.62	rpm
Critical Speed Ratio	0.43	
Service Factor	2.20	
Ratio	34.16	

Model No AMX37

Drive

Shaft mounted speed reducer with motor,
Three-Phase ph, 480 V, 60 Hz, IP 55, Iso F

Installed Power	0.37	kW
Operating Speed	50.5	rpm
Explosion Class	Not Specified	

Agitator Details:

Drive Height (H)	569	mm
Shaft Length (L)	2,676	mm
Shaft Diameter (W)	41.27	mm

Impeller:

Stage	Type	Direction	Diameter
Impeller 1	F322	Down	1,100

Seal

Blade Material	316L
Hub Material	316L
Shaft Material	316L
Mixer Mounting	Plate
Shaft Guide	None

N.B. Fasteners and gaskets for mounting on vessel - not included

G Value: 100 s^{-1}

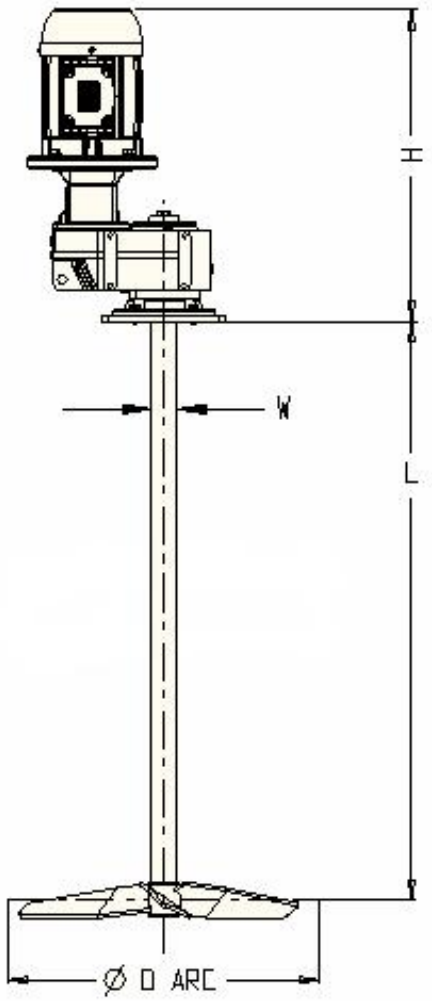

Copyright © 2016 African Mixing Technologies Proprietary Limited All rights reserved. No part of this may be reproduced, distributed, or transmitted in any form or by any means, including photocopying, recording, or other electronic or mechanical methods, without the prior written permission of African Mixing Technologies Proprietary Limited.

AFX HOLDINGS | AFROMIX AFRICA | AFX MIXING AND PUMPING TECHNOLOGIES INC. NORTH AMERICA | AFX MIXING AND PUMPING TECHNOLOGIES LTD EUROPE

Agitator Specification
TagNo: 02-MX-105/205/305

Quote Ref: 22/CA/2882
Description: Stage-2 Flocculator Chamber

Client	AFX Canada	Project Ref	Flash Mixer	Qty	3

Liquid SG	0.00	tons/m³
Solids SG	0.00	tons/m³
Slurry SG	1.00	tons/m³
Operating Pressure	0.0	kPa
Operating Temp	35	C
Ambient Temp	35	C
Tank Open	Yes	
Solids %	0	%
Particle Size	0	um
Viscosity	1	cps
Gas Rate	0.000	Nm³/h
Volume	24.92	m³
Diameter	3,076	mm
Width / Length	3,048 / 2,438	mm
Height	3,658	mm
Beam Height	203	(Nom)
Top Shape	Flat	
Bottom Shape	Flat	

Mounting: Central

Colour	RAL 3001(Signal-Red), total layer thickness at least 150um	
Weight	77	kg
Bending Moment	1.50	kNm
Torque	0.16	kNm
Vert	3.34	kN
Critical Speed	118.62	rpm
Critical Speed Ratio	0.31	
Service Factor	3.60	
Ratio	44.22	

Model No AMX18

Drive

Shaft mounted speed reducer with motor,
Three-Phase ph, 480 V, 60 Hz, IP 55, Iso F

Installed Power	0.18	kW
Operating Speed	37.3	rpm
Explosion Class	Not Specified	

Agitator Details:

Drive Height (H)	544	mm
Shaft Length (L)	2,676	mm
Shaft Diameter (W)	41.27	mm

Impeller:

Stage	Type	Direction	Diameter
Impeller 1	F322	Up	1,100

Seal

Blade Material	316L
Hub Material	316L
Shaft Material	316L
Mixer Mounting	Plate
Shaft Guide	None

N.B. Fasteners and gaskets for mounting on vessel - not included

G Value: 65 s^{-1}

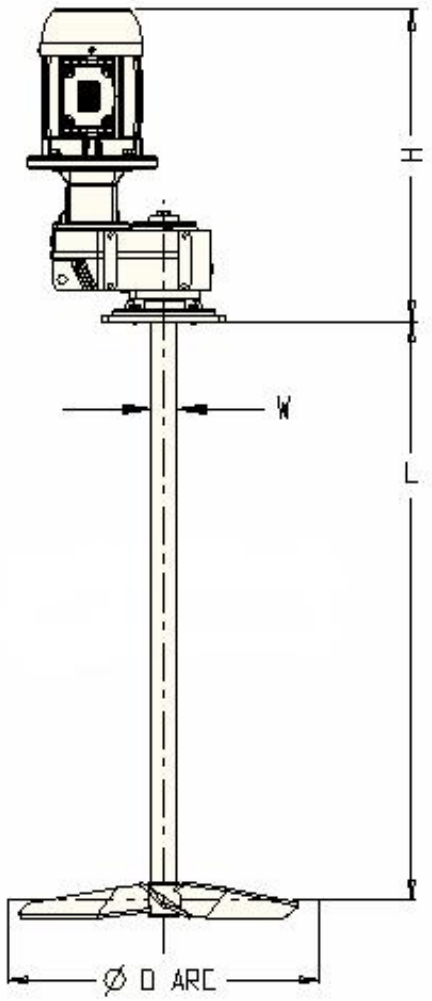

Copyright © 2016 African Mixing Technologies Proprietary Limited All rights reserved. No part of this may be reproduced, distributed, or transmitted in any form or by any means, including photocopying, recording, or other electronic or mechanical methods, without the prior written permission of African Mixing Technologies Proprietary Limited.

PROJECT NAME: Wrangell WTP

PROJECT NO.: 17805

DOCUMENT NAME: Rapid Mixers - Highlighted Cutsheets

DOCUMENT NO.: 17805-ME-DAS-005

A	10-Jan-23	Issued for Review	JE	VD	AA
Rev	**Date**	**Revision Description**	**Originator**	**Checker**	**Approver**

AFRICA | NORTH AMERICA | EUROPE

Agitator Specification
TagNo: 01-MX-021

Quote Ref: 22/CA/2882
Description: Stage-1 Rapid mixing chamber

Client	AWC Solutions	Project Ref	Flash Mixer	Qty	1

Liquid SG	0.00	tons/m³
Solids SG	0.00	tons/m³
Slurry SG	1.00	tons/m³
Operating Pressure	0.0	kPa
Operating Temp	35	C
Ambient Temp	35	C
Tank Open	Yes	
Solids %	0	%
Particle Size	0	um
Viscosity	1	cps
Gas Rate	0.000	Nm³/h
Volume	1.53	m³
Diameter	1,032	mm
Width / Length	914 / 914	mm
Height	1,829	mm
Beam Height	203	(Nom)
Top Shape	Flat	
Bottom Shape	Flat	

Mounting: Central

Colour	RAL 3001(Signal-Red), total layer thickness at least 150um	
Weight	56	kg
Bending Moment	1.50	kNm
Torque	0.11	kNm
Vert	1.67	kN
Critical Speed	429.09	rpm
Critical Speed Ratio	0.63	
Service Factor	2.10	
Ratio	6.35	

Model No AMX150

Drive

Shaft mounted speed reducer with motor,
Three-Phase ph, 480 V, 60 Hz, IP 55, Iso F

Installed Power	1.50	kW
Operating Speed	272.4	rpm
Explosion Class	Not Specified	

Agitator Details:

Drive Height (H)	621	mm
Shaft Length (L)	1,597	mm
Shaft Diameter (W)	38.10	mm

Impeller:

Stage	Type	Direction	Diameter
Impeller 1	F322	Up	435
Impeller 2	F322	Up	435

Seal

Blade Material	316L
Hub Material	316L
Shaft Material	316L
Mixer Mounting	Plate
Shaft Guide	None

N.B. Fasteners and gaskets for mounting on vessel - not included

G Value: 800 s^{-1}

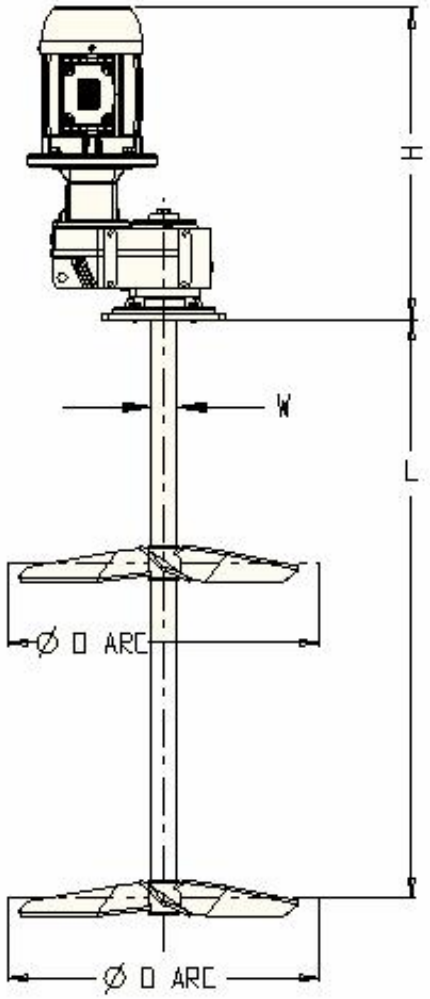

Copyright © 2016 African Mixing Technologies Proprietary Limited All rights reserved. No part of this may be reproduced, distributed, or transmitted in any form or by any means, including photocopying, recording, or other electronic or mechanical methods, without the prior written permission of African Mixing Technologies Proprietary Limited.

AFX HOLDINGS | AFROMIX AFRICA | AFX MIXING AND PUMPING TECHNOLOGIES INC. NORTH AMERICA | AFX MIXING AND PUMPING TECHNOLOGIES LTD EUROPE

Agitator Specification
TagNo: 01-MX-022

Quote Ref: 22/CA/2882
Description: Stage-2 Rapid mixing chamber

Client	AWC Solutions	Project Ref	Flash Mixer	Qty	1

Liquid SG	0.00	tons/m³
Solids SG	0.00	tons/m³
Slurry SG	1.00	tons/m³
Operating Pressure	0.0	kPa
Operating Temp	35	C
Ambient Temp	35	C
Tank Open	Yes	
Solids %	0	%
Particle Size	0	um
Viscosity	1	cps
Gas Rate	0.000	Nm³/h
Volume	1.53	m³
Diameter	1,032	mm
Width / Length	914 / 914	mm
Height	1,829	mm
Beam Height	203	(Nom)
Top Shape	Flat	
Bottom Shape	Flat	

Mounting: Central

Colour	RAL 3001(Signal-Red), total layer thickness at least 150um	
Weight	57	kg
Bending Moment	1.50	kNm
Torque	0.11	kNm
Vert	1.67	kN
Critical Speed	405.12	rpm
Critical Speed Ratio	0.67	
Service Factor	2.10	
Ratio	6.35	

Model No AMX150

Drive

Shaft mounted speed reducer with motor,
Three-Phase ph, 480 V, 60 Hz, IP 55, Iso F

Installed Power	1.50	kW
Operating Speed	272.4	rpm
Explosion Class	Not Specified	

Agitator Details:

Drive Height (H)	621	mm
Shaft Length (L)	1,662	mm
Shaft Diameter (W)	38.1	mm

Impeller:

Stage	Type	Direction	Diameter
Impeller 1	F322	Up	435
Impeller 2	F322	Up	435

Seal

Blade Material	316L
Hub Material	316L
Shaft Material	316L
Mixer Mounting	Plate
Shaft Guide	None

N.B. Fasteners and gaskets for mounting on vessel - not included

G Value: 800 s^{-1}

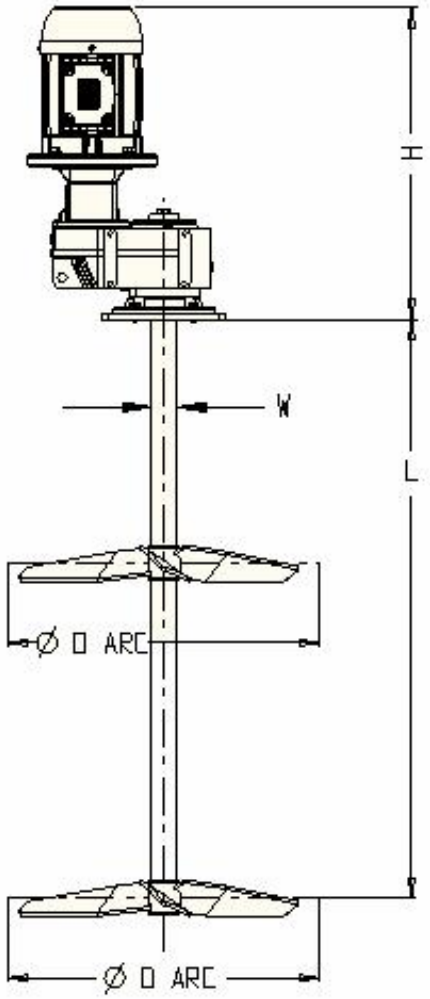

Copyright © 2016 African Mixing Technologies Proprietary Limited All rights reserved. No part of this may be reproduced, distributed, or transmitted in any form or by any means, including photocopying, recording, or other electronic or mechanical methods, without the prior written permission of African Mixing Technologies Proprietary Limited.

PROJECT NAME: Wrangell WTP

PROJECT NO.: 17805

DOCUMENT NAME: Skimmer Drive - Highlighted Cutsheets

DOCUMENT NO.: 17805-ME-DAS-006

A	10-Jan-23	Issued for Review	JE	VD	AA
Rev	**Date**	**Revision Description**	**Originator**	**Checker**	**Approver**

Catalog designation

KAF47 R37 DR2S63MS4

Further information online on https://www.sew-eurodrive.ca

Reference data

Transaction	: 415930827
Item	: 300

Product data

Speed [r/min]	: 1675 / 7.4
Total ratio [i]	: 225 / infinite
Ma max [Nm]	: 400
Output torque [Nm]	: 205
Service factor SEW-FB	: 1,95
Mounting position	: M1B
Term.box.pos.[°] / cable entry	: 270 (T) / normal
Lubricant / -volume [l]	: CLP HC-460-NSF-H1 Oil f.Food / 0,80 /
	: 0,35
Oil manufacturer designation	: Cassida Fluid GL 460
Paint coat	: Top coat RAL7031 (blue gray)
Hollow shaft	: 1.250 inch
Design	: B5-flange-mounted version and hollow
	: shaft
Safety cover	: None
Flange	: 200mm
Documentation no. A	: 25803530
	: 29151457
Parts list	: 382551895
Mounting pos.primary gear unit	: M1
Primary gear unit position [°]	: 90
Parts list	: 012571298
Motor power [kW]	: 0.18
Motor power [HP]	: 0.25
Motor frequency [Hz]	: 60
Cyclic duration factor S1-S10	: S1
Motor voltage [V] / conn. type	: 230/460 double star/star
Rated current [A]	: 1,07 / 0,53
cos phi	: 0,62
Wiring diagram	: R76 / 680430506
Connection set at factory	: Star
Thermal cl.[°C]/Enclosure[IP]	: 155(F) / 54
Service factor motor	: 1.15
International efficiency class	: IE1
Efficiency at 50/75/100% Pn [%]	: 58,3 / 64,2 / 66,0
CE mark	: Yes
Design specification	: USA (UR) /Canada (CSA)
EISA identification	: Yes, conform to EISA
K.V.A.code	: G
CT speed range	: 700-1800rpm

To be confirmed

The present product information does not represent a quotation in legal terms. Technical data must be confirmed in a final technical verification. This verification is performed when creating the quotation/order. A legally binding contract requires an order issued by the ordering party and an order confirmation issued by SEW-EURODRIVE GmbH & Co KG.

Documentation no. A	: 25957074
	: 29149053
Nameplate	: English
Nameplate position	: 0°
Opera.instr. A lang./quantity	: English
Parts list/language/quantity	: English / 0
Commodity code	: 85015100
Weight	: 35.00 KG

The present product information does not represent a quotation in legal terms. Technical data must be confirmed in a final technical verification. This verification is performed when creating the quotation/order. A legally binding contract requires an order issued by the ordering party and an order confirmation issued by SEW-EURODRIVE GmbH & Co KG.

To be confirmed

7.10.7 KA37 ... KA157 / KH37 ... KH157 / KV37 ... KV107 / KT37 ... KT157

39 025 04 00

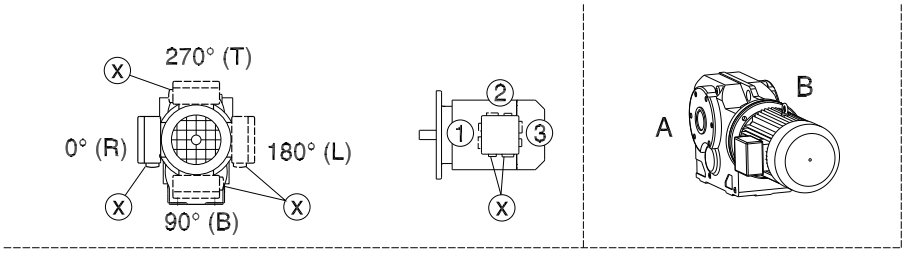

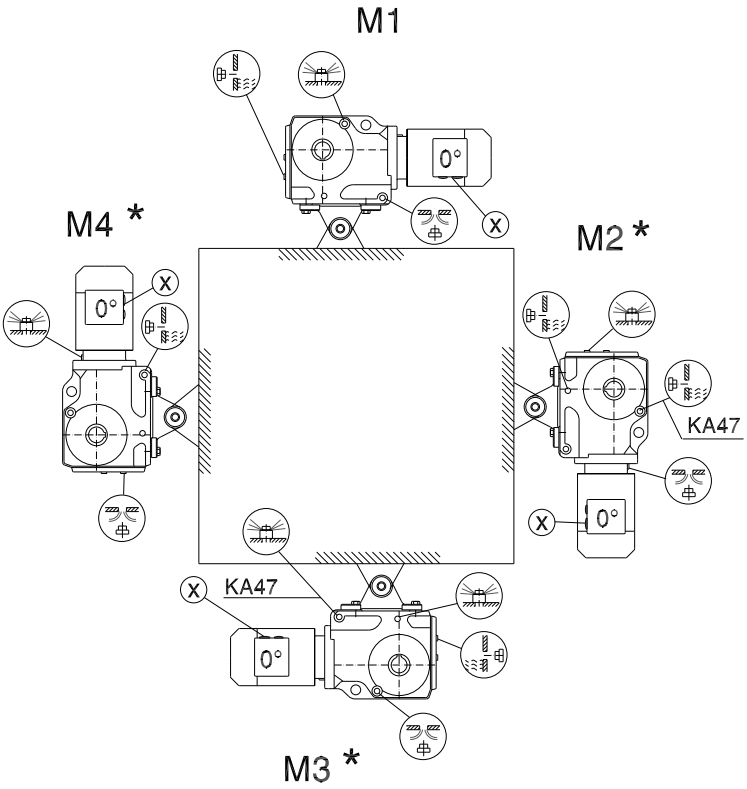

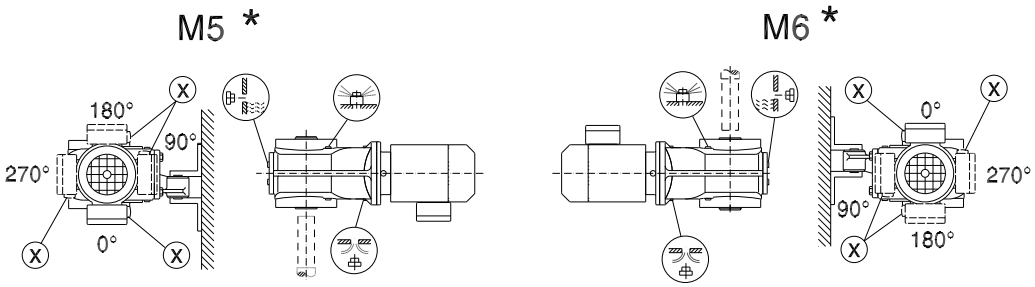

* → (page 104)

PROJECT NAME: WRANGELL WTP

PROJECT NO.: 17805

DOCUMENT NAME: MECHANICAL SPARE PARTS LIST

DOCUMENT NO.: 17805-ME-LST-001

A	13-Feb-23	Issued for Review	JE	VD	AA
Rev	**Date**	**Revision Description**	**Originator**	**Checker**	**Approver**

Mechanical Spare Parts list

Rev	No.	Description of Parts	Associated Equip. Tag	Manufacturer/ Vendor	Part Identification No.	No. of Units recommended	Suggested Shelf Spare - Yes/No	Part of Proposal	Unit Cost (CAD)	Total Cost (CAD)	Notes
A	1	Recycle Pump	02-P-120/220/320	Grundfos	CR 15-4 A-GJ-A-E-HQQE	1	Yes	Yes	$0.00	$0.00	
A	2	Recycle Pump - Shaft Seal	02-P-120/220/320	Grundfos	96511844	1	Yes	No	TBD	TBD	Pricing to be provided in next phase.
A	3	Recycle Pump - Chamber Stack Kit	02-P-120/220/320	Grundfos	96508456	1	Yes	No	TBD	TBD	Pricing to be provided in next phase.
A	4	Sacrificial Anodes	01-SP-0211, 01-SP-0231, 02-SP-1021, 02-SP-1041, 02-SP-1102, 02-SP-1192, 02-SP-2021, 02-SP-2041, 02-SP-2102, 02-SP-2192, 02-SP-3021, 02-SP-3041, 02-SP-3102, 02-SP-3192, 03-SP-1401, 03-SP-1601, 03-SP-1801, 03-SP-2401, 03-SP-2601, 03-SP-2801	Canadian Metal/AWC	WTMAGAN10	20	Yes	No	TBD	TBD	Pricing to be provided in next phase.
A	5	Filter Nozzles	03-SP-1402/1602/1802 03-SP-2402/2602/2802	Orthos Liquid Systems	D-36x0.2-M24-45-200-S	288	Yes	No	TBD	TBD	Pricing to be provided in next phase.
A	6	Filter Nozzle Expansion Nuts	03-SP-1402/1602/1802 03-SP-2402/2602/2802	Orthos Liquid Systems	DB50-28/12-17	288	Yes	No	TBD	TBD	Pricing to be provided in next phase.
A	7	Skimmer Gear Motor	02-SKM-111/211/311	SEW	KA47 R37 DR2S63MS4	1	Yes	No	TBD	TBD	Pricing to be provided in next phase.
A	8	Rapid Mixer - Bearing Kit	01-MX-021/022	AFX	TBD	1	Yes	No	TBD	TBD	Pricing to be provided in next phase.
A	9	Rapid Mixers - Seal Kit	01-MX-021/022	AFX	TBD	1	Yes	No	TBD	TBD	Pricing to be provided in next phase.
A	10	Flocculators - Bearing Kit	02-MX-103/105 02-MX-203/205 02-MX-303/305	AFX	TBD	1	Yes	No	TBD	TBD	Pricing to be provided in next phase.
A	11	Flocculators - Seal Kit	02-MX-103/105 02-MX-203/205 02-MX-303/305	AFX	TBD	1	Yes	No	TBD	TBD	Pricing to be provided in next phase.
A	12	Recycle Skid - Spare Isolation Kits - 3"	02-ST-125/225/235	Linebacker / GPT Industries	61(LB61)	3	Yes	No	TBD	TBD	Pricing to be provided in next phase.
A	13	Recycle Skid - Spare Isolation Kits - 4"	02-ST-125/225/235	Linebacker / GPT Industries	61(LB61)	3	Yes	No	TBD	TBD	Pricing to be provided in next phase.
A	14	Saturator Internals	02-ST-125/225/235	Jaeger / FABCO	901010	12.57	Yes	No	TBD	TBD	- Pricing to be provided in next phase. - QTY is in cu. ft. - Suggested QTY is for a complete packing change of 1 saturator.
A	15	Air Compressor - General Purpose Filter Spare	08-AC-810/820	Ingersoll Rand	FA75IG	1	Yes	No	TBD	TBD	Pricing to be provided in next phase.
A	16	Air Compressor - Coalescing Filter Spare	08-AC-810/820	Ingersoll Rand	FA75IH	1	Yes	No	TBD	TBD	Pricing to be provided in next phase.
A	17	Air Compressor - Activated Carbon Filter Spare	08-AC-810/820	Ingersoll Rand	FA75IA	1	Yes	No	TBD	TBD	Pricing to be provided in next phase.
A	18	Anthracite - 0.95 -1.05 mm	03-SP-1403/1603/1803 03-SP-2403/2603/2803	Manufacture's Mineral	-	200	Yes	No	TBD	TBD	- Pricing to be provided in next phase. - QTY is in cu. ft. - Suggested QTY is for one filter change.
A	19	Sand - 0.45 - 0.55 mm	03-SP-1403/1603/1803 03-SP-2403/2603/2803	Manufacture's Mineral	-	250	Yes	No	TBD	TBD	- Pricing to be provided in next phase. - QTY is in cu. ft. - Suggested QTY is for one filter change.
A	20	Spray Bar - Nozzles	02-SP-1191/2191/3191	McMaster Carr	4388K18	5	Yes	No	TBD	TBD	Pricing to be provided in next phase.

Note: If additional spare parts are required, please provide the project number, quantity and spare part number in an e-mail to spareparts@awcsolutions.com

PROJECT NAME: Wrangell WTP

PROJECT NO.: 17805

DOCUMENT NAME: Specialty Item Cutsheets

DOCUMENT NO.: 17805-PI-DAS-001

A	31-Jan-23	Issued for Review	JE	VD	AA
Rev	**Date**	**Revision Description**	**Originator**	**Checker**	**Approver**

Galvotec®

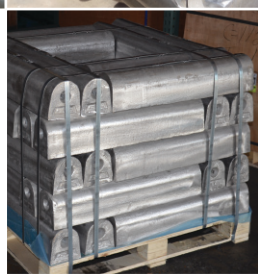

Magnesium Anodes
Tag Numbers:
- 01-SP-0211/0231
- 02-SP-1021/1041/1102/1192
- 02-SP-2021/2041/2102/2192
- 02-SP-3021/3041/3102/3192
- 03-SP-1401/1601/1801
- 03-SP-2401/2601/2801

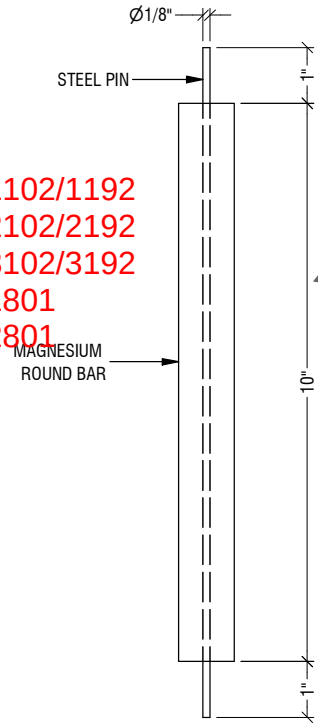

10" Magnesium
Anodes 1" Dia
P/N: WTMAGAN10

www.galvotec.com

More than 30 Years of Excellence

ALUMINUM ANODES: Galvotec III, Galvotec CWIII, Mil-A-24779
Specify these alloys for marine/offshore needs or cold deepwater applications

ZINC ANODES: ASTM B 418 Types I and II, Mil-A-18001
Specify these alloys for soil* and marine applications

MAGNESIUM ANODES: ASTM B 843 Types M1C/SuperMAG™, H1A, H1B, H1C, Mil-A-21412A
Specify these alloys for soil*, marine, condenser, and fresh water applications

MAGNESIUM RIBBON ANODE: ASTM B 843 M1C/SuperLINE™
Specify SuperLINE™ for soil applications

EXTRUDED MAGNESIUM ANODES: ASTM B 107 AZ31D/SuperROD™
Specify SuperROD™ for magnesium water heater applications*

** NSF/ANSI Certified to Std.- 61 Potable water use*

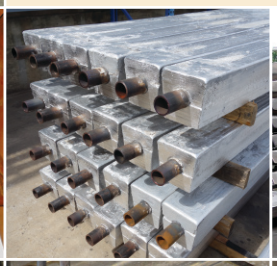

- Established and privately owned since 1984
- ISO 9001:2008 Certified by DNV
- Gold Medal approved supplier to the U.S. Dept. of Defense - NAVSEA QPL-24779
- Compliant to DNV RP-B-401
- Approved supplier to Shell Qualified as per Shell DEP 37.81.20.31-EPP
- NSF/ANSI Certified Magnesium and Zinc Products for use in potable water systems as per STD-61
- Analytical laboratories that surpasses any other anode manufacturer for chemical and electrochemical testing and R&D of sacrificial anodes
- Experienced, dedicated staff of engineers, technologists, technicians, foundry men and women, and superior sales team that provide the highest quality products and the ultimate in customer support in the industry
- Gold level Sponsor of N.A.C.E.

The ANODE Company

Galvotec
6712 So. 36th Street • McAllen, Texas 78503 • Tel: (956)630-3500
www.Galvotec.com

CHEMICAL ANALYSIS REPORT

Customer:	AWC Water Solutions, Ltd
P.O. #: 2209	**Product Description:**
Ref. # 2109-006	Line Item 1 - 1.050" Dia. x 10" Magnesium Anode, Nominal Wt. 0.7#
Order Date: 8/30/2021	
Release Date: 2/22/2022	
Alloy Specification:	**Magnesium A Z 31 D**
Method of Analysis :	**Optical Emission Spectroscopy**

	Acceptable Range (%)	*.6-1.4*	*.002max*	*.20-1.0*	*.04max*	*.05max*	*2.5-3.5*	*0.001*	*BAL*
Line Item	**Heat**	**Zn**	**Fe**	**Mn**	**Cu**	**Si**	**Al**	**Ni**	**Mg**
1	K20071	0.9	0.002	0.33	0.001	<0.05	3.1	<0.0010	BAL

"This certificate meets the requirements of EN 10204, 3.1".

Enoc Hernandez
Prepared by

Oscar A. Fonseca 2/22/2022
Reviewed by ***Date***

Galvotec Alloys, Inc. ACCREDITED Certificate #: 3612.01

Information in this document may not be duplicated or modified without the expressed written permission of Galvotec Alloys, Inc.

NSF International

RECOGNIZES

GALVOTEC ALLOYS, INC.

Facility: MC ALLEN, TX

AS COMPLYING WITH NSF/ANSI 61.
PRODUCTS APPEARING IN THE NSF OFFICIAL LISTING ARE AUTHORIZED TO BEAR THE NSF MARK.

NSF

Nonfood Compounds
Program Listed

This certificate is the property of NSF International and must be returned upon request. For the most current and complete information, please access NSF's website (www.nsf.org/usda).

May 8, 2006
Certificate# 2X591 - 01

David Purkiss, General Manager
Water Distribution Systems

The Public Health and Safety Organization

NSF Product and Service Listings

These NSF Official Listings are current as of **Thursday, January 04, 2018** at 12:15 a.m. Eastern Time. Please contact NSF International to confirm the status of any Listing, report errors, or make suggestions.

Alert: NSF is concerned about fraudulent downloading and manipulation of website text. Always confirm this information by clicking on the below link for the most accurate information: http://info.nsf.org/Certified/PwsComponents/Listings.asp?Company=2X590&Standard=061&

NSF/ANSI 61
Drinking Water System Components - Health Effects

NOTE: Unless otherwise indicated for Materials, Certification is only for the Water Contact Material shown in the Listing. Click here for a list of Abbreviations used in these Listings. Click here for the definitions of Water Contact Temperatures denoted in these Listings.

Galvotec Alloys, Inc.
6712 S. 36th Street
McAllen, TX 78503
United States
956-630-3500
Visit this company's website
(http://www.galvotec.com)

Facility : McAllen, TX

Mechanical Devices

		Water	Water

Trade Designation	Size	Contact Temp	Contact Material
Sacrificial Anodes[1] [2]			
Galvotec SuperROD GA-MG-R1.050	5 - 300 gal.	D. HOT	MLTPL
Galvotec SuperROD GA-MG-R1.315	5 - 300 gal.	D. HOT	MLTPL
Galvotec SuperROD GA-MG-R1.561	5 - 300 gal.	D. HOT	MLTPL
Galvotec SuperROD GA-MG-R2.024	5 - 300 gal.	D. HOT	MLTPL
Galvotec SuperROD GA-MG-R2.562	5 - 300 gal.	D. HOT	MLTPL
Galvotec SuperROD GA-MG-R500	5 - 300 gal.	D. HOT	MLTPL
Galvotec SuperROD GA-MG-R625	5 - 300 gal.	D. HOT	MLTPL
Galvotec SuperROD GA-MG-R675	5 - 300 gal.	D. HOT	MLTPL
Galvotec SuperROD GA-MG-R700	5 - 300 gal.	D. HOT	MLTPL
Galvotec SuperROD GA-MG-R750	5 - 300 gal.	D. HOT	MLTPL
Galvotec SuperROD GA-MG-R800	5 - 300 gal.	D. HOT	MLTPL
Galvotec SuperROD GA-MG-R840	5 - 300 gal.	D. HOT	MLTPL
Galvotec SuperROD GA-MG-R900	5 - 300 gal.	D. HOT	MLTPL

[1] The anodes have been evaluated for the following end configurations:
    1) Anode Outlet Devices (AOD), size refers to length of AOD:
       2" regular
       2 1/2" regular
       3" regular
       4" regular
       2" heat trap
       2 1/2" heat trap
       3" heat trap
       4" heat trap
       2" heat trap w/dope
       2 1/2" heat trap w/dope
       3" heat trap w/dope
       4" heat trap w/dope
    2) Threaded Steel Caps (12L14, 1215, Q235A)
[2] The anode material is extruded magnesium.

Number of matching Manufacturers is 1

Number of matching Products is 13

Processing time was 0 seconds

McMASTER-CARR®

Clamp-on Spray Nozzle

Flat, Quick-Change Tip, 1 Pipe, 0.07" Orifice Diameter

Spray Nozzle
Tag Number:
- 02-SP-1191/2191/3191

6312K111

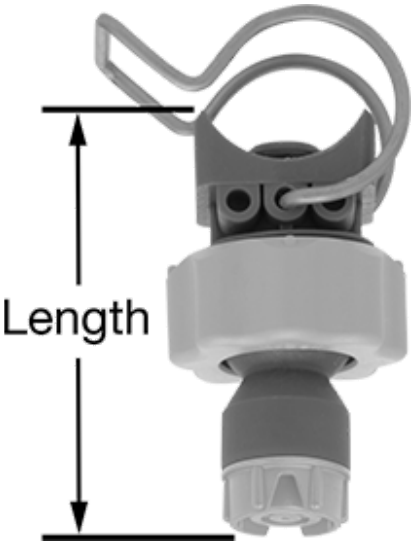

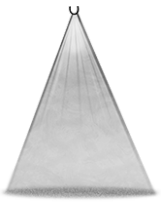

Flat

Connection Type	Pipe
Pipe Connection Type	Clamp On
For Pipe Size	1
Flow Rate, gpm	
@ 20 psi	0.7
@ 40 psi	1
@ 100 psi	1.5
Orifice Diameter	0.07"
For Hole Diameter	9/16"
Overall Diameter	1 13/16"
Length	3"
Maximum Pressure	100 psi
Maximum Temperature	175° F
Material	Polypropylene Plastic
Reinforcement Material	Glass
Clamp Material	300 Series Stainless Steel
Gasket Material	EPDM Rubber
O-Ring Material	Fluoroelastomer Rubber
Maximum Swivel Angle	52°
Tip Type	Replaceable
Spray Application	General Purpose
Spray Pattern	Flat
Spray Direction	Straight
For Use With	Thin Liquids
Spray Angle	80°
RoHS	RoHS 3 (2015/863/EU) Compliant
REACH	REACH (EC 1907/2006) (07/08/2021, 219 SVHC) Compliant
DFARS	Specialty Metals COTS-Exempt
Country of Origin	Canada
USMCA Qualifying	No
Schedule B	842490.9040
ECCN	EAR99
Related Product	Replacement Tips

These nozzles have replaceable tips that are removable with a quarter-turn. All tips have two O-rings to prevent leaks. Drill a hole anywhere along a pipe and snap on these nozzles. Made of reinforced plastic, all have a 300 Series stainless steel clamp that grips the pipe and an EPDM rubber gasket that prevents leaks. They're good for foam control and produce a flat, thin spray pattern.

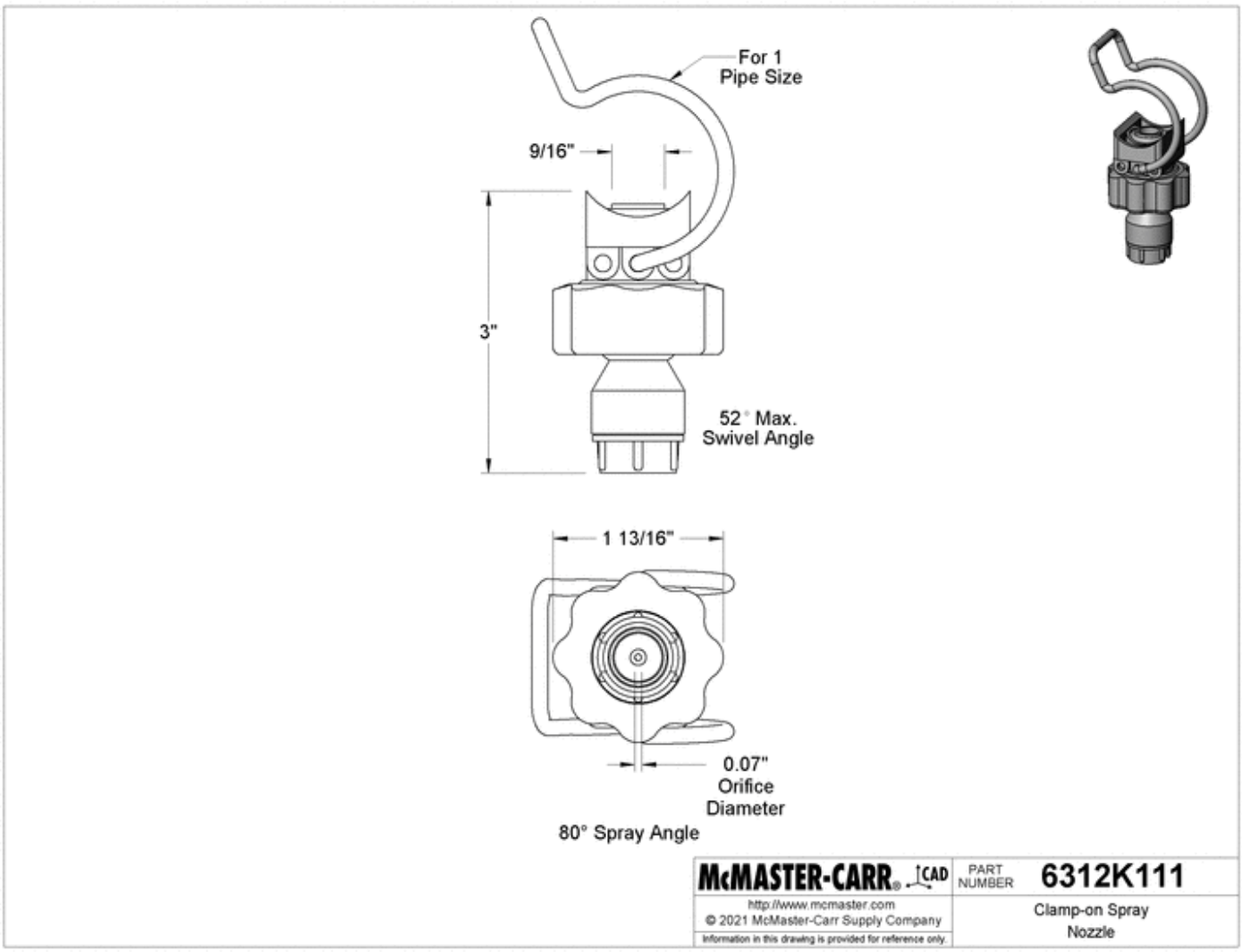

The information in this 3-D model is provided for reference only.

DeZURIK
APCO | HILTON

BULLETIN 640
JUNE 2020

Tag Numbers:
- 02-CV-1204/2204/3204

APCO CSC SILENT CHECK VALVES

Design & Construction

APCO CSC Silent Check Valves are designed to prevent water hammer by positively closing before reversal of flow can occur. The valve closes silently, is low in cost, reliable and requires no regular maintenance.

Available with wafer or globe style bodies, sizes range from 1-42" (15-1100mm). They are available with Ductile Iron, Cast Iron, Carbon Steel or 316 Stainless Steel bodies with ASME 125/150 or ASME 250/300 end connections.

Silent Check Valves are commonly used in vertical turbine pump installations when pumping from a well to an elevated reservoir. They are also recommended for commercial and industrial HVAC applications such as heating systems and condensate return lines. When specified, the APCO CSC Silent Check Valves are Factory Mutual System Approved for use on hazardous firefighting equipment and fire protection systems.

CSC - 600A Globe Style

CSC - 300A Wafer Style

Compact Design Saves Space

The short face-to-face dimensions of APCO Silent Check Valves offer a compact solution in equipment room piping layouts. APCO Silent Check Valves are capable of silent operation when installed in vertical flow up or flow down, or horizontal position.

Metal or Resilient Seats Available

Valves can be metal seated or have an optional resilient seat of Acrylonitrile-Butadiene (NBR), Terpolymer of Ethylene Propylene & A Diene (EPDM) or Fluoro Rubber (FKM). The resilient seat ring can be easily added in the field to convert a metal seated valve to a resilient seated valve.

Full Flow Area

Both the wafer style and the globe style valves provide full flow area. Flow area of wafer style valves is 3% greater than pipe area while globe style valves are 10% greater than pipe area.

Designed for Superior Performance

The contours of the valve body are designed for smooth flow and minimum loss. The full cross-sectional area of critical points in the body is greater than the cross-sectional area of the same size pipe, giving the APCO Silent Check Valve lower head loss than many other brands of slient check valves.

Spring Loaded for Silent Shutoff

When the pump stops, the stainless steel coil spring forces the disc closed against slight pump head at zero velocity which results in silent closure.

Plug Guided at Both Ends

The plug is center guided at both ends by the shaft. The stainless steel bushing and shaft protect against electrolytic action and provides long valve service life.

Ease of Maintenance

If maintenance is ever required, the seat and plug are hand replaceable in the field. The bushing is held in place by the spring so that it can be easily removed if required.

Factory Mutual System Approved

Factory Mutual System ✶APPROVED

APCO Silent Check Valves have been thoroughly tested by Factory Mutual Research Corporation and are approved for use on hazardous firefighting equipment and fire protection systems. Refer to ordering information for available configurations.

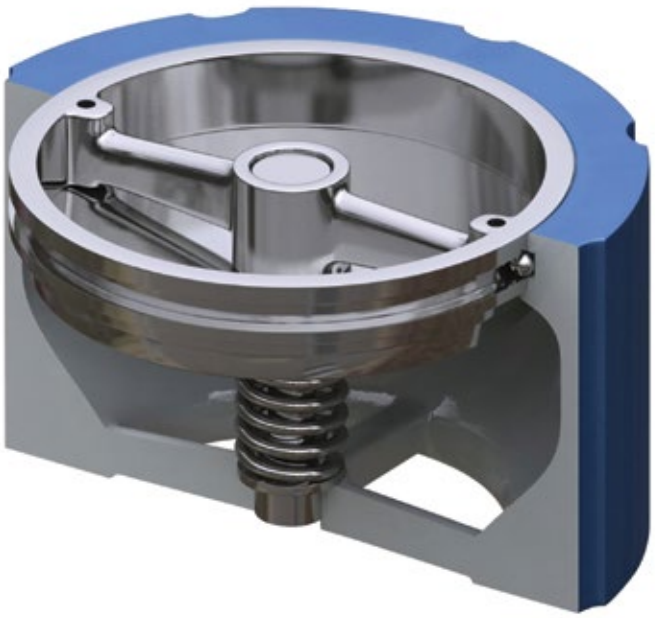

© 2020 DeZURIK, Inc.

Prevents Water Hammer Before it Starts

The Silent Check Valve was designed to open at approximately ¼ to ½ psi (2-3 kPa). This means that when a pump is shut down, a Silent Check Valve will completely close while there is still positive head on the inlet side of approximately ½ psi (3 kPa). In this simple manner reverse flow, which is a major cause of water hammer, is prevented.

Installing Silent Check Valves on the Discharge Side of the Pump

Water hammer can be both destructive and annoying. It is caused when a pump shuts down and the forward flow of water is allowed to reverse and is then suddenly stopped by the check valve. By positioning a Silent Check Valve on the discharge side of the pump, reverse flow never has a chance to start.

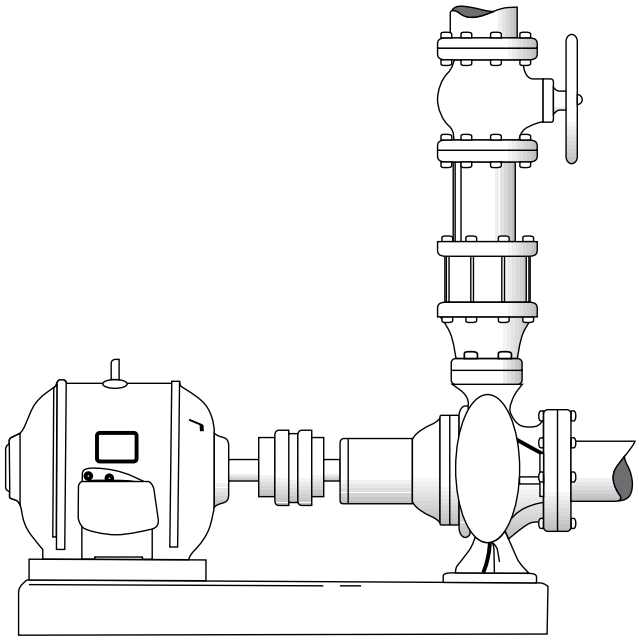

Typical Silent Check Valve Installations on Vertical Turbine Pumps

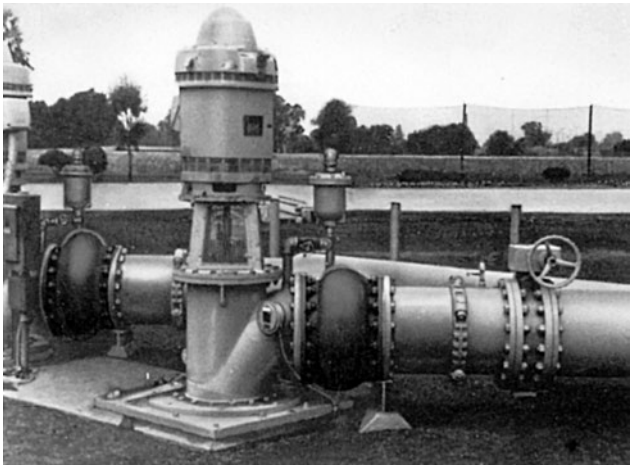

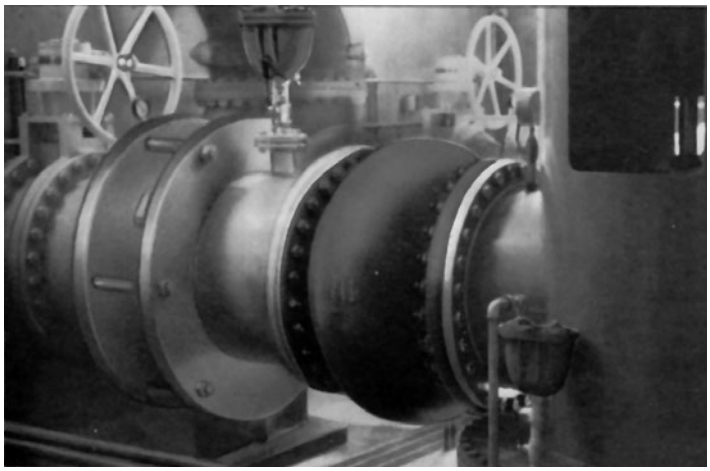

Materials of Construction

Item	Description	Material
A1	Body	Ductile Iron, ASTM A536, Grade 65-45-12
		Cast Iron, ASTM A126, Grade B
		Carbon Steel, ASTM A216 Grade WCB
		316 Stainless Steel, ASTM A351 CF8M
A2	Seat	316 Stainless Steel, ASTM A351, GRCF-8M
A3	Plug	316 Stainless Steel, ASTM A351, GRCF-8M
		Ductile Iron with 316 Stainless Steel Ring
A4	Spring	Stainless Steel ASTM A313, Type 316
A5	Bushing	Stainless Steel, Type 316
A8	Resilient Seat	NBR, Acrylonitrile-Butadiene
		EPDM, Terpolymer of Ethylene Propylene & A Diene
		FKM, Fluoro Rubber

Wafer Style

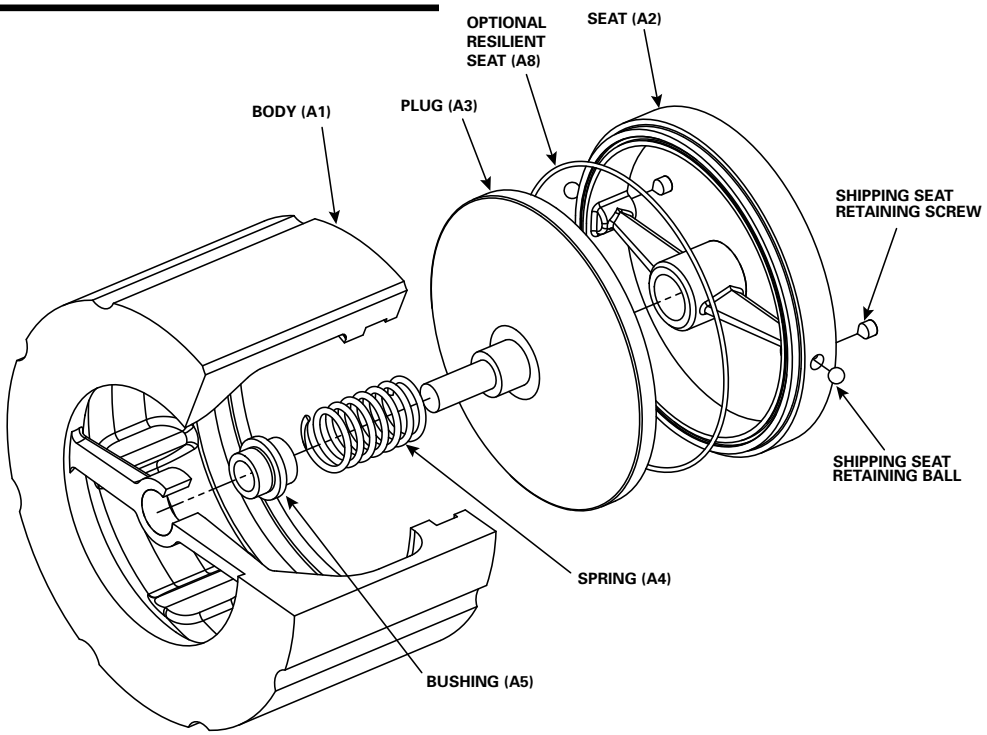

~~Globe Style~~

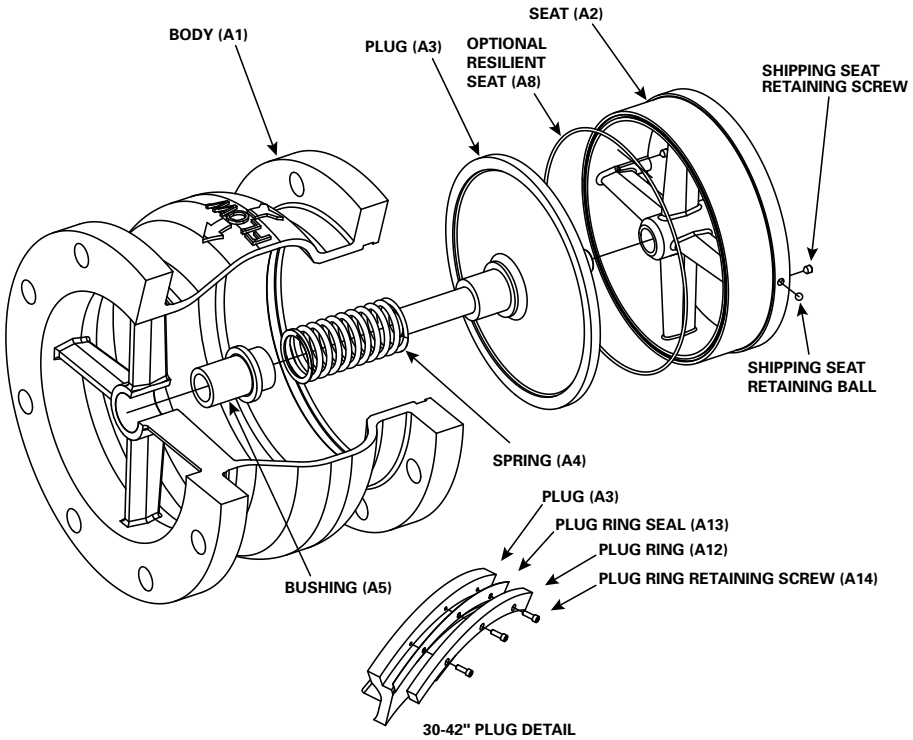

Valve Selection

Pressure Ratings (at ambient temperature)

Wafer Body Style 300A

Body Material	End Connection Order Code	
	W1W2 & W2	W1
Ductile Iron	400 psi (2760 kPa)	~~250 psi (1720 kPa)~~
Carbon Steel	450 psi (3100 kPa)	285 psi (1960 kPa)
316 Stainless Steel	425 psi (2930 kPa)	275 psi (1900 kPa)

Globe Body Style 600A

Body Material	End Connection Order Code			
	F1		F2	
	Valve Size		Valve Size	
	3-24"	30-42"	3-12"	14-36"
Cast Iron	—	150 psi (1030 kPa)	—	Contact DeZURIK
Ductile Iron	250 psi (1720 kPa)	—	400 psi (2760 kPa)	300 psi (2070 kPa)
Carbon Steel	285 psi (1960 kPa)		450 psi (3100 kPa)	350 psi (2410 kPa)
316 Stainless Steel	275 psi (1900 kPa)		425 psi (2930 kPa)	350 psi (2410 kPa)

Pipeline Velocity Range

Recommended between 4 ft/s and 12 ft/s

Temperature Ratings:

Material	Temperature Range*
NBR, Acrylonitrile-Butadiene	-70 to 250° F (-57 to 121° C
EPDM, Terpolymer of Ethylene Propylene & A Diene	-20 to 300° F (-29 to 150° C)
FKM, Fluoro Rubber	-40 to 325° F (-40 to 163° C)
Metal Seats	to 325° (163° C)

* Maximum operating temperature is a function of the materials used in the valve. All valves are rated to a maximum temperature of at least 250° F (121° C). Contact application engineering if the valve is required to operate above 325° F (163° C).

Applicable Standards

APCO CSC Silent Check Valves are designed and tested to meet the following standards:	
ASME B16.42	Conforms to flat faced, flange drilling
Factory Mutual Approved	FM 1230 Anti-water Hammer Check Valves. When specified, DI Body Material and Metal Seat; 4-10" 300A W1W2 or W1 or 4-12" 600A F1

Head Loss Characteristics

CSC 600A Globe Style Silent Check Valve

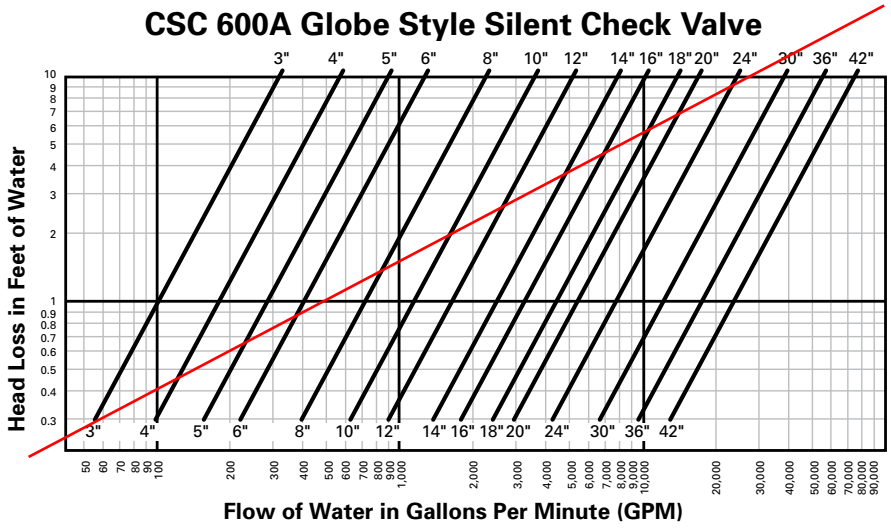

CSC 300A Wafer Style Silent Check Valve

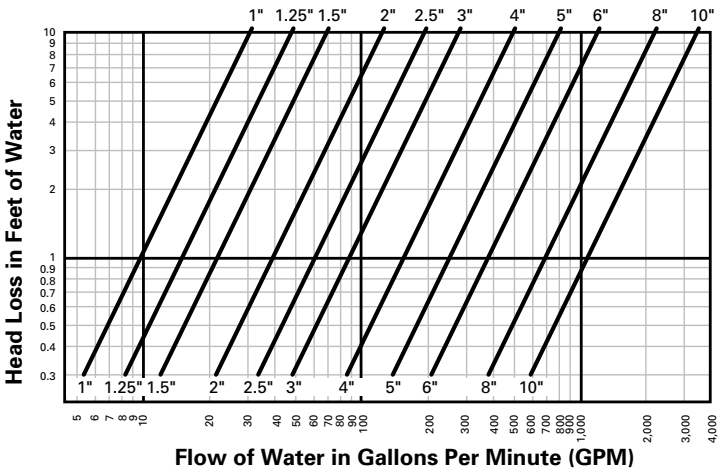

Valve Selection

Valve Weights

Wafer Body Style 300A

Valve Size	Class 125/150 (W1W2)
1" 15mm	2 1
1.25" 32mm	3 1
1.5" 40mm	4 2
2" 50mm	5 2
2.5" 65mm	8 4
3" 80mm	11 5
4" 100mm	18 8
5" 125mm	27 12
6" 150mm	39 18

Valve Size	Class 125/150 (W1)	Class 250/300 (W2)
8" 200mm	86 39	86 39
10" 250mm	129 59	129 59

Pounds
Kilograms

Globe Body Style 600A

Valve Size	Class 125/150 (F1)	Class 250/300 (F2)
3" 80mm	28 13	31 14
4" 100mm	54 24	54 24
6" 150mm	70 32	96 44
8" 200mm	116 53	159 72
10" 250mm	168 76	247 112
12" 300mm	300 136	325 147
14" 350mm	392 178	440 200
16" 400mm	510 231	613 278
18" 450mm	594 269	800 363
20" 500mm	745 338	970 440
24" 600mm	1395 633	1745 792
30" 750mm	1770 803	2100 953
36" 900mm	3660 1660	4600 2087
42" 1100mm	5760 2618	—

Ordering

To order, simply complete the valve order code from information shown. An ordering example is shown for your reference.

Valve Style
Give valve style code as follows:

CSC = Silent Check Valves

Valve Size
Give valve size code as follows:

1	=	1"	15mm	12	=	12"	300mm
1.25	=	1.25"	32mm	14	=	14"	350mm
1.5	=	1.5"	40mm	16	=	16"	400mm
2	=	2"	50mm	18	=	18"	450mm
2.5	=	2.5"	65mm	20	=	20"	500mm
3	=	3"	80mm	24	=	24"	600mm
4	=	4"	100mm	30	=	30"	750mm
6	=	6"	150mm	36	=	36"	900mm
8	=	8"	200mm	42	=	42"	1100mm
10	=	10"	250mm				

Body Style
Give body style code as follows:

300A = Wafer (1-10")
600A = Globe (3-42")

End Connection
Give end connection code as follows:

Wafer Style
W1W2 = Wafer, ASME 125/150/250/300 (1-6")
W1 = Wafer, ASME 125/150 (8-10")
W2 = Wafer, ASME 250/300 (8-10")
Globe Style
F1 = Flanged, ASME 125/150 (3-42")
F2 = Flanged, ASME 250/300 (3-36")

Body Material
Give body material code as follows:

DI = Ductile Iron (1-24")
CI = Cast Iron (30-42")
CS = Carbon Steel
S2 = 316 Stainless Steel

Trim Combination
Plug & Seat Material
Give plug & seat material code as follows:

S2 = 316 Stainless Steel (1-24")
DIS2 = Ductile Iron Plug with 316 Stainless Steel Plug Ring & Seat (30-42")

Seating Surface
Give seating surface material code as follows:

M = Metal
NBR = Acrylonitrile-Butadiene
FKM = Fluoro Rubber
EPDM = Terpolymer of Ethylene Propylene & A Diene

Options
Give option code as follows:

DTR = DeZURIK Standard Certified Hydrostatic Shell & Seat Test Report
FM = FM Approved (DI Body Material and Metal Seat)
(4-10" 300A W1W2 or W1)
(4-12" 600A F1)

Ordering Example:

~~CSC,10,600A,F1,DI,S2-M*~~

CSC,3,300A,W1W2,DI,S2-NBR

Dimensions

Basic Valve - 300A Wafer

Valve Size	Dimensions			
	A	B	C	D
1" / 15mm	2.75 / 70	2.06 / 52	1.25 / 32	0.06 / 1.6
1.25" / 32mm	3.13 / 80	2.06 / 52	1.50 / 38	0
1.5" / 40mm	3.63 / 92	2.38 / 60	1.81 / 46	0.09 / 2.4
2" / 50mm	4.25 / 108	2.63 / 67	2.38 / 60	0
2.5" / 65mm	5.00 / 127	2.88 / 73	2.88 / 73	0
3" / 80mm	5.75 / 146	3.13 / 80	3.38 / 86	0.06 / 1.6
4" / 100mm	7.00 / 178	4.00 / 102	4.75 / 121	0.06 / 1.6
6" / 150mm	9.75 / 248	5.50 / 140	6.50 / 165	0.88 / 22
8" / 200mm	13.38 / 340	6.50 / 165	8.50 / 216	1.88 / 48
10" / 250mm	16.00 / 406	8.25 / 210	10.50 / 267	1.19 / 30

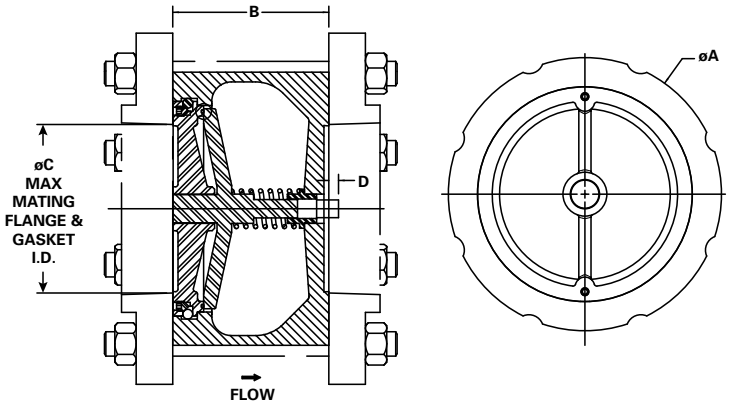

Inches
Millimeters

Valves are furnished with flat face flanges and must be mated to flat face flanges with full face gaskets.
Use only Flat Face Flange and Full Face Gasket.
ID of mating flange (seat side only) should never be greater than seat ring OD.

Basic Valve - 600A Globe

Valve Size	All Valves				Class 125/150 (F1)					Class 250/300 (F2)				
	B	C	H	J	A	D	E	F	G	A	D	E	F	G
3" / 80mm	6.00 / 152	3.25 / 83	0	3.38 / 86	7.50 / 191	0.94 / 24	4	0.75 / 19	6.00 / 152	8.25 / 210	1.13 / 29	8	0.88 / 22	6.63 / 168
4" / 100mm	7.25 / 184	4.13 / 105	0	4.75 / 121	9.00 / 229	0.94 / 24	8	0.75 / 19	7.50 / 191	10.00 / 254	1.25 / 32	8	0.88 / 22	7.88 / 200
6" / 150mm	9.00 / 229	5.63 / 143	0	6.50 / 165	11.00 / 279	1.00 / 25	8	0.88 / 22	9.50 / 241	12.50 / 318	1.44 / 37	12	0.88 / 22	10.56 / 268
8" / 200mm	10.13 / 257	7.00 / 178	0	8.50 / 216	13.50 / 343	1.13 / 29	8	0.88 / 22	11.75 / 299	15.00 / 381	1.63 / 41	12	1.00 / 25	13.00 / 330
10" / 250mm	12.00 / 315	9.06 / 230	0.16 / 4	10.75 / 273	16.00 / 406	1.19 / 30	12	1.00 / 25	14.25 / 362	17.50 / 445	1.88 / 48	16	1.13 / 29	15.25 / 387
12" / 300mm	14.38 / 365	10.38 / 264	0.31 / 7.9	12.88 / 327	19.00 / 483	1.25 / 32	12	1.00 / 25	17.00 / 432	20.50 / 521	2.00 / 51	16	1.25 / 32	17.75 / 451
14" / 350mm	15.75 / 400	12.00 / 305	0	14.75 / 375	21.00 / 533	1.38 / 35	12	1.13 / 29	18.75 / 476	23.00 / 584	2.13 / 54	20	1.25 / 32	20.25 / 514
16" / 400mm	17.63 / 448	13.31 / 338	0.69 / 18	16.50 / 419	23.50 / 597	1.44 / 37	16	1.13 / 29	21.25 / 540	25.50 / 648	2.25 / 57	20	1.38 / 35	22.50 / 572
18" / 450mm	18.75 / 476	15.19 / 386	1.38 / 35	18.75 / 476	25.00 / 635	1.56 / 40	16	1.25 / 32	22.75 / 578	28.00 / 711	2.38 / 60	24	1.38 / 35	24.75 / 629
20" / 500mm	20.63 / 524	16.75 / 425	1.13 / 29	20.63 / 524	27.50 / 699	1.69 / 43	20	1.25 / 32	25.00 / 635	30.50 / 775	2.50 / 64	24	1.38 / 35	27.00 / 686
24" / 600mm	24.00 / 610	19.00 / 483	2.25 / 57	24.75 / 629	32.00 / 813	1.88 / 48	20	1.38 / 35	29.50 / 749	36.00 / 914	2.75 / 70	24	1.63 / 41	32.00 / 813
30" / 750mm	29.25 / 743	23.38 / 594	3.56 / 91	29.50 / 749	38.75 / 984	2.13 / 54	28	1.38 / 35	36.00 / 914	43.00 / 1092	3.00 / 76	28	1.88 / 48	39.25 / 997
36" / 900mm	45.00 / 1143	26.63 / 676	0	36.00 / 914	46.00 / 1168	2.38 / 60	32	1.63 / 41	42.75 / 1086	50.00 / 1270	3.38 / 86	32	2.25 / 57	46.00 / 1168
42" / 1100mm	50.00 / 1270	33.00 / 838	1.00 / 25	42.00 / 1067	53.00 / 1346	2.63 / 67	36	1.63 / 41	49.50 / 1257	—	—	—	—	—

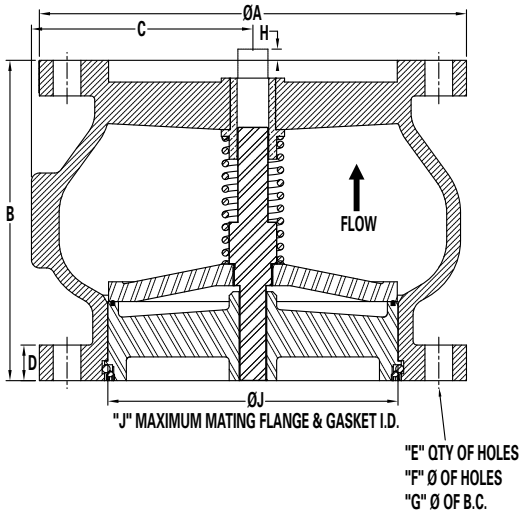

Inches
Millimeters

Valves are furnished with flat face flanges and must be mated to flat face flanges with full face gaskets.
Use only Flat Face Flange and Full Face Gasket.
If special mating flanges are used, ID of the mating flange (seat side only) should never be greater than seat ring OD.

Water Quality Association
Gold Seal Certificate

DeZURIK, INC.

250 Riverside Ave. North

Sartell, MN United States

Facility: Houston, TX

Certification Date: December 14, 2022

Authorized By:

Caren L. Settler
Process Improvement Manager

Water Quality Association
2375 Cabot Drive
Lisle, IL 60532, USA

Products are evaluated according to Product Certification Scheme Type 5, as defined in ISO/IEC 17067 (current version).
This Certificate, or any part thereof, may not be used in a misleading manner and validation of its use is contingent upon the Official WQA web-listing.
Please contact your Account Representative for product expiration terms. All Standards referenced in the Product Certification Schemes by Standard Name.

Revision: 09/27/2021

FORM.12046

Water Quality Association Official Gold Seal Listing

Granted to the following company:	DeZURIK, INC. 250 Riverside Ave. North Sartell, MN 56377 United States
For the Facility Located at:	Houston, TX

The WQA Gold Seal Certification Department has issued certification for the following model(s) to the standard(s) below. Only models that appear in the official listing are authorized to bear the WQA Gold Seal.

NSF/ANSI/CAN 61 - 2021: Drinking Water System Components - Health Effects

DeZURIK/APCO ARV,200	DeZURIK/APCO ARV,200A	DeZURIK/APCO ARV,50A
DeZURIK/APCO ASU	DeZURIK/APCO AVC	DeZURIK/APCO AVV, 140/150
DeZURIK/APCO AVV, 1800/1800K	DeZURIK/APCO CSC,300A	DeZURIK/APCO CSC,600A

NSF/ANSI/CAN 372 - 2020: Drinking Water System Components - Lead Content

DeZURIK/APCO ARV,200	DeZURIK/APCO ARV,200A	DeZURIK/APCO ARV,50A
DeZURIK/APCO ASU	DeZURIK/APCO AVC	DeZURIK/APCO AVV, 140/150
DeZURIK/APCO AVV, 1800/1800K	DeZURIK/APCO CSC,300A	DeZURIK/APCO CSC,600A

Notice: To request any changes to the certified model(s), please request a Change to Certified Product (CCP) form. Examples include any change to the wetted parts or formulations such as supplier or material types, literature, or a change in company name. This list is not all inclusive. Failure to submit documentation regarding changes may result in non-compliance with the standard(s) as well as de-listing of the affected models.

Tag Numbers:
- 02-SP-1251/2251/3251

Mass Transfer Packing

Jaeger Tri-Packs® Plastic Packing

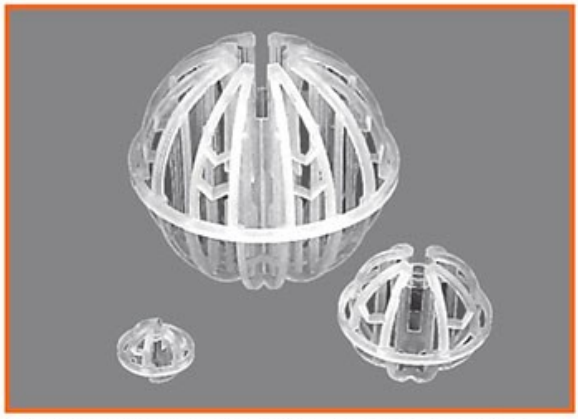

Plastic Jaeger Tri-Packs® is a hollow spherical column packing constructed of a unique network of ribs, struts, and drip rods. Its geometry was totally revolutionary and unprecedented at the time of its 1978 introduction and it continues to be the packing to which all others are compared. Plastic Jaeger Tri-Packs® are distinguished from other packing by its superior geometric shape. Their spherical shape allows each element to roll into the "packed position" without forming void areas common to irregular shaped packing or those with excessive pins and appurtenances. With Jaeger Tri-Packs®, there is no need for allowances for settling and nesting is virtually impossible. The round Jaeger Tri-Packs® offers reliable and predictable loading of your tower which means reliable and predictable performance. In addition to the superior geometric shape, an active surface area is vital to mass transfer.

The unique network of ribs, struts and drip rods have proven to give the Jaeger Tri-Packs® a distinct advantage in providing excellent wetting qualities and maintaining liquid distribution through the packed bed. Some suppliers claim more surface area, but surface area alone is not an indication of performance. Excessive surface area can impede proper gas and liquid contact and always results in higher pressure drop which increases horsepower requirements and operating costs. The Jaeger Tri-Packs® offers an optimum surface area to open area ratio which yields excellent mass transfer efficiency and reduced operating costs.

Jaeger Tri-Packs® are available in four sizes, 1", 1.25", 2", and 3.5". Jaeger Products uses only prime, virgin resins and no recycled materials are ever used. Jaeger Tri-Packs® made of polypropylene (PP) have been certified by NSF to Standard 61 for use in potable water applications. Almost any injection moldable resin is available; the most common include PP, PE, PP-G, PVC, CPVC, Noryl, Kynar®, Halar®, Teflon® and many more.

MATERIAL	SERVICE TEMP. (°F) **	1" DIAMETER	1 1/4" DIAMETER	2" DIAMETER	3 1/2" DIAMETER
Polypropylene (PP)	180	901010	901012	901020	901040
Polyethylene(PE)	160	902010	902012	90202	902040
Polypropylene Glass Filled (PP-G)	210-250*	901GF010	901GF012	901GF020	901GF040
Noryl (PPO)	230	951010	951012	951020	951040
Polyvinylchloride (PVC)	140	905010	905012	905020	905040
Corzan (CPVC)	200	903010	903012	903020	903040
Kynar (PVDF)	280	904010	904012	904020	904040
TopEx (LCP)		953010	953012	953020	953040
Tefzel (ETFE)	350	906010	906012	906020	906040
Teflon (PFA)	400	915010	915012	915020	915040
Halar (ECTFE)	290	907010	907012	907020	907040

MASS TRANSFER DATA

ABSORPTION SYSTEM SYSTEM	G (LB/HR-FT2)	L (LB/HR-FT2)	TEMP. (°F)	HTU-INCHES 1	2	32
HCl-H2O	1792	2048	77	7.0	10.6	12.0
HCl-NaOH	1567	2048	68	6.1	8.8	10.0
Cl2-NaOH	1229	2202	122	9.9	14.5	16.0
NO2-Na2S+NaOH	717	1127	68	32.0	49.2	54.0
NH3-H2SO4	492	1024	68	4.1	6.0	7.0
NH3-H2O	512	1024	68	5.6	8.4	10.0
NH3-H2O	512	4096	68	3.6	5.4	6.2
SO2-NaOH	1946	4096	140	8.1	12.0	14.0
HF-H2O	1844	3072	77	4.6	6.9	8.1
H2S-NaOH	1229	1331	68	13.0	19.4	22.0

PHYSICAL PROPERTIES

SIZE (IN.)	1	1 1/4	2	3 1/2
GEOMETRIC SURFACE AREA (FT2/FT3)	85	70	48	38
PACKING FACTOR (1/FT.)	28	25	16	12
VOID SPACE (%)	90	92	93	95
WEIGHT (LB/FT3)	6.2	5.6	4.2	3.3
NUMBER O PIECES/FT3	2,300	N/A	380	48

Notes:

- Other plastics are available on request..
- * Depending on glass content
- ** At 1 atm, air/water at max. recommended depth)

Tag Numbers:
- 02-CV-1260/2260/3260

M. A. Stewart & Sons Ltd.
VALVES AND FITTINGS

B Series
Forged Brass
In-Line Spring Loaded
200 WOG
Check Valves

700

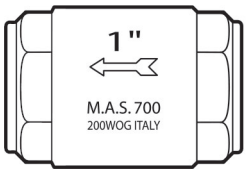

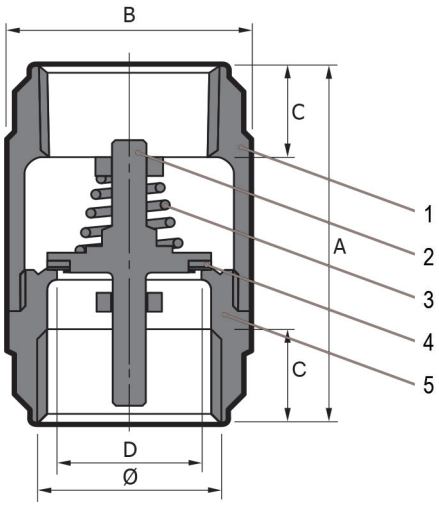

- Forged 2 piece construction
- ANSI B1.20.1 NPT ends
- Center guided piston
- Rubber seated
- 200 WOG

700 PART/MATERIAL		
NO.	**PART NAME**	**MATERIAL**
1	Body	Forged Brass ASTM B283-C37700
2	Piston	Thermoplastic Hostaform (POM)
3	Spring	316 Stainless Steel
4	Disc	Rubber – NBR 70SH
5	Cap	Forged Brass ASTM B283-C37700

700 DIMENSIONS										
Size	**3/8**	**1/2**	**3/4**	**1**	**1 1/4**	**1 1/2**	**2**	**2 1/2**	**3**	**4**
A	45	48	53	59	67	70	80	93	102	119
mm/in	1.77	1.89	2.09	2.32	2.64	2.76	3.15	3.66	4.02	4.69
B	27	30	37	45	56	63	79	103	120	155
mm/in	1.06	1.18	1.46	1.77	2.20	2.48	3.11	4.06	4.72	6.10
C	10	11	12	13	14	15	16	18	20	22
mm/in	0.39	0.43	0.47	0.51	0.55	0.59	0.63	0.71	0.79	0.87
D	10	15	20	25	32	40	50	65	80	100
mm/in	0.39	0.59	0.79	0.98	1.26	1.57	1.97	2.56	3.15	3.94
Cv	3.2	4.5	8	12	21	28	47	70	105	185
Weight	0.20	0.25	0.35	0.55	0.80	1.0	1.7	3.5	4.0	7.0
lb/kg	0.09	0.12	0.16	0.25	0.37	0.46	0.78	1.59	1.82	3.2

PRESSURE TEMPERATURE RATING

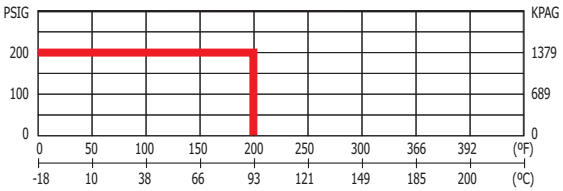

*NOTES:
1) Suitable for domestic applications and horizontal or vertical upward flow installations.
2) Not recommended for reciprocating pump applications.
3) Contains thermo plastic and rubber components. Confirm suitability with manufacturer on special fluid applications.

Technical data, dimensions, materials & specifications are subject to change without notice. MAS JULY 2019

an EnPro Industries company

Tag Numbers:
3" - 02-SP-1263/2263/3263
4" - 02-SP-1264/2264/3264

LineBacker® 61™

NSF Certified Sealing and Isolation Systems

LineBacker® sealing gaskets utilize a rectangular sealing element, referred to as a "quad" ring, in combination with a unique groove design to effectively seal and isolate flanges for all types of applications. LineBacker® gaskets effectively seal flanges within piping systems carrying potable water and other materials in high/low temperature extremes, even at high pressure ratings.

Of particular importance with respect to NSF/ANSI Standard 61, is the micro-exposure of the sealing element (EPDM) within the G-10 Epoxy Glass retainer material. In addition to providing positive sealing characteristics relative to the fluid flowing in the pipe, the sealing element is also fully encapsulated between the flange and GRE retainer, reducing exposure of the sealing element to harsh outside atmospheric conditions.

NSF/ANSI Standard 61 establishes minimum health effect requirements for the chemical contaminants and impurities that may be indirectly imparted to drinking water.

The LineBacker® 61™ Sealing/Isolating kit meets all criteria associated with NSF health effects testing, certification and production facility inspections. GPT confirms that NSF has assessed and certified the LineBacker® 61™ as conforming with the relevant NSF standards. For more information regarding NSF, please contact GPT product management.

BEFORE TIGHTENING

The sealing elements extend slightly above the surface of the retainer. As the flange is tightened the sealing elements are compressed and move sideways into the inclined portion of the groove, developing a high unit pressure against the flange faces.

AFTER TIGHTENING

The flange faces have come into firm contact with the retainer, thus encapsulating the sealing elements within grooves. At the same time, the unique LineBacker seal configuration provides elastic memory for elastomers not normally associated with this characteristic - resulting in a simple flat gasket with extremely high loading and self energizing characteristics without adverse cold flow problems.

COMMON LINEBACKER® 61™ PHYSICAL PROPERTIES - RETAINER

ASTM	Test Method	G-10 Epoxy Glass
D149	Dielectric Strength Volts/Mil (Short Time)	690
D229	Water Absorbtion (%)	0.22
D790	Flexural Strength (psi)	LW 66,000 / CW 60,000
D785	Hardness Rockwell "M"	99

ASTM	Test Method	G-10 Epoxy Glass
D638	Tensile Strength (psi)	LW 43,000 / CW 39,000
D732	Shear Strength (psi)	19,000
	Temperature Range	Cryogenic to +302°F Cryogenic to +150°C
Seal Element Temperature Range Temperature Range (F) Temperature Range (C)		**EPDM** -40 to +212°F -40 to +100°C

DIAMOND-HYDE™ COATED HCS WASHERS

Unlike Xylan® coated isolation washers, the new Diamond-Hyde™ coated HCS Washers are much more abrasion resistant and stronger dielectrically than the older generation isolation washers. Diamond-Hyde™ coated HCS Washers provide both with the addition of a very chemically resistant barrier. The isolating washer can be the weakest link in a flange isolating kit. By using Diamond-Hyde™ coated HCS Washers, the washer is virtually impervious to cracking, chipping or scratching. The Diamond-Hyde™ coated HCS Washer has passed API 6FB fire testing. Please contact GPT product management for additional information.

G-10 1 PC SLEEVE AND WASHER SETS

One-piece sleeve and washer sets include the following items for each bolt:

One - 1/8" thick steel washer

One - 1/8" thick G-10 Washer

One - G-10 Isolating Sleeve

APPLICATION CONSIDERATIONS

Completely assembled, easier to install, 1 PC sleeves also allow the inspector a visual indication of sleeve usage.

QUALITY (MADE IN THE U.S.A. - A.R.R.A COMPLIANT)

Flange isolating kits shall be manufactured at a facility that has a registered ISO 9001:2008 Quality Management System. Submittals shall include copy of valid ISO registration and NSF 61 certification.

NSF 61 FLANGE ISOLATION KIT SPECIFICATION

Materials for flange isolation kits on pipes containing drinking/potable water (up to 302ºF, 150ºC) shall consist of the following components:

ISOLATING AND SEALING GASKET

The full faced, NSF 61 certified, isolating and sealing gasket shall be LineBacker® 61™ Sealing Gasket (LB61) - Type "E", 1/8" thick, G-10 retainer. The retainer contains a precision tapered groove to accommodate the controlled compression of a EPDM quad-ring sealing element. Sealing element placement shall accommodate either flat, raised face or RTJ flanges. Quad-ring seal shall be pressure energized. G-10 retainer shall have a 800 volts/mil dielectric strength and a minimum 65,000 psi compressive strength. Full faced flange isolating gasket (weld-neck) shall be equal to or slightly smaller than the bore of the flange; (slip-on) shall be equal to or smaller than the I.D. of mating pipe.

FULL LENGTH BOLT ISOLATING SLEEVES

One full length G-10 sleeve (extending half way into both steel washers) for each flange bolt. The G-10 shall be a 1/32 inch thick tube with a 800 volts/mil dielectric strength and water absorption of 0.04% or less.

WASHERS

Two, 1/8 inch thick, G-10 isolating washers for each bolt. Their compressive strength shall be 66,000 psi, dielectric strength 800 volts/mil and water absorption 0.10% or less. Two, 1/8 inch thick zinc plated, hot rolled steel washers for each bolt. The I.D. of all washers shall fit over the isolating sleeve and both the steel and isolating washers shall have a same I.D. and O.D.

AVAILABILTIY

Kits shall be manufactured by GPT, Wheat Ridge, CO, U.S.A

GPT
an EnPro Industries company
www.gptindustries.com

4990 Iris Street
Wheat Ridge, CO 80033
Tel: (303) 988-1242
Fax: (303) 988-1922

6455 Clara Road, Suite 300
Houston, TX 77041
Tel: (713) 747-6948
Fax: (713) 747-6029

2 Woodlands Sector 1
#03-11 Woodlands Spectrum 1
Singapore 738068
Republic of Singapore

Unit 3-5, Chester Road
Colmworth Business Park
Eaton Socon, St. Neots
Cambridgeshire, PE 19 8YT

Oilfields Supply Center Ltd.
Executive Office 4, PO Box 1518
Jebel Ali Free Zone, Dubai
United Arab Emirates

Filter Nozzles
Tag Numbers:
- 03-SP-1402/1602/1802
- 03-SP-2402/2602/2802

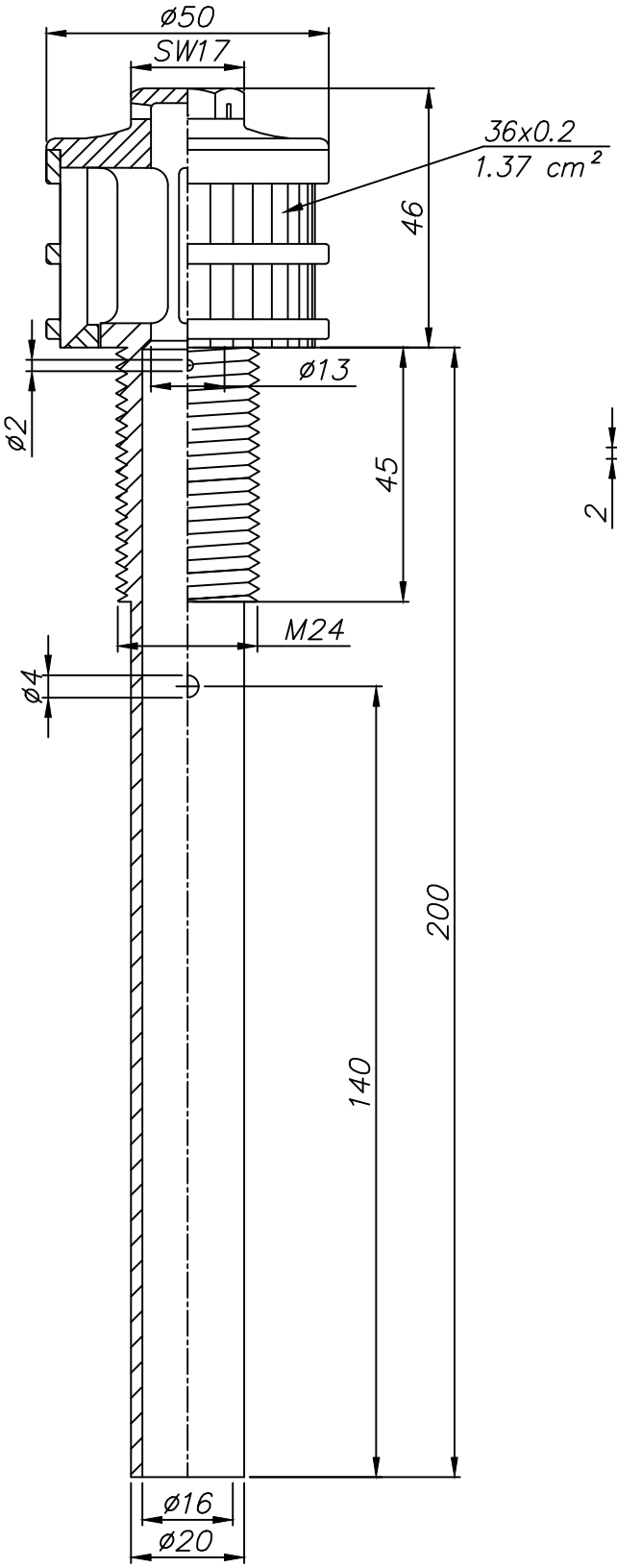

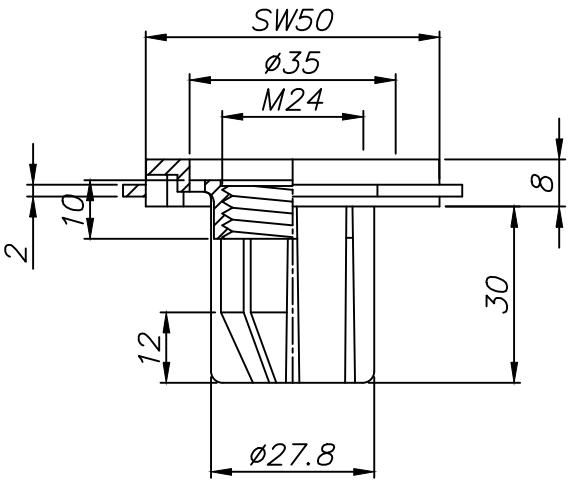

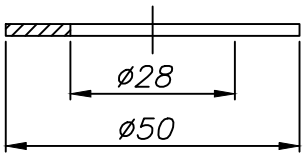

Property of ORTHOS Liquid Systems, Inc.
to be used only by authorized personnel,
shall not be reproduced in whole or part
without written permission from
ORTHOS Liquid Systems, Inc.

	ORTHOS Liquid Systems,Inc.		DRAW.-NO. DO.2200-4	PROJECT AWC WATER SOLUTIONS	SCALE MATERIAL PP
			DATE	NAME	
		DRAWN	28.01.15	C.SCH	D-36x0.2-M24-45-200-s DB50-28/12-17 + DG50-28x2-EPDM
		CHECK	28.01.15	SCH	SHEET 1/1
Rev.	DATE	NAME	28.01.15	MA	

The Public Health and Safety Organization

NSF Product and Service Listings

These NSF Official Listings are current as of **Monday, August 29, 2022** at 12:15 a.m. Eastern Time. Please contact NSF to confirm the status of any Listing, report errors, or make suggestions.

Alert: NSF is concerned about fraudulent downloading and manipulation of website text. Always confirm this information by clicking on the below link for the most accurate information: http://info.nsf.org/Certified/PwsComponents/Listings.asp?Company=36250&Standard=061&

NSF/ANSI/CAN 61
Drinking Water System Components - Health Effects

NOTE: Unless otherwise indicated for Materials, Certification is only for the Water Contact Material shown in the Listing. Click here for a list of Abbreviations used in these Listings. Click here for the definitions of Water Contact Temperatures denoted in these Listings.

Orthos Liquid Systems, Inc.
596 Browns Cove Road
Riverwalk Business Park
Ridgeland, SC 29936
United States
843-987-7200

Facility : Ridgeland, SC

Mechanical Devices

Trade Designation	Size	Water Contact Temp	Water Contact Material
Filter Underdrain			
Centurion™ Monolithic Filter Underdrain	[1]	CLD 23	MLTPL
Centurion™ Monolithic Filter Underdrain with Filtration Nozzles	[1]	CLD 23	MLTPL

[1] Certified for a minimum flow of 0.7 gallons per minute per square foot of filter area.

Miscellaneous Process Devices/Components			
MU Nuts	[1]	CLD 23	MLTPL
Series T Nozzle	[1]	CLD 23	MLTPL
Series C Nozzle	[1]	CLD 23	MLTPL
Series D Nozzle	[1]	CLD 23	MLTPL
Series K Nozzle	[1]	CLD 23	MLTPL
Series R Nozzle	[1]	CLD 23	MLTPL
Series S Nozzle	[1]	CLD 23	MLTPL
DP Washers	[1]	CLD 23	MLTPL
DB Expanding Rings	[1]	CLD 23	MLTPL
PS Saddle	[1]	CLD 23	MLTPL

[1] Certified for a minimum flow of 0.7 gallons per minute per square foot of filter area.

Number of matching Manufacturers is 1
Number of matching Products is 12
Processing time was 0 seconds

For Filter Media Cutsheets refer to document:
- 17805-ME-DAS-001

REFERENCE DRAWINGS

1. P&ID: 17805-PR-PID-001
2. PLANT LAYOUT: 17805-PI-LAY-001
3. PLATFORM & STAIR GENERAL ARRAIGNMENT 17805-PI-GAD-900
4. STANDARD LIFTING DETAILS: TPL-FAB-200-00

GENERAL

1. DIMENSIONS ARE SHOWN IN INCHES (FT-IN) UNLESS STATED OTHERWISE
2. ALL DIMENSIONS ARE REFERENCED FROM THE OUTSIDE FACE OF THE EXTERIOR WALL PLATES, UNLESS STATED OTHERWISE. ALL ELEVATION DIMENSIONS ARE REFERENCED FROM TOP OF BASE PLATE (1/4" THICK).
3. TOLERANCES:
   TANK DIMENSIONS: +/- 1/4 in
   NOZZLE LOCATIONS: +/- 1/4 in
4. AWC PROVIDES CATHODIC PROTECTION FOR ALL ALUMINUM TANKS.

ENGINEERING, STANDARDS & SPECIFICATION

1. AWC WILL PERFORM SEISMIC ANCHOR SIZING AS PER THE SPECIFICATIONS AND APPLICABLE GOVERNING CODES AND STANDARDS.
2. AWC WILL PROVIDE STAMPED ANCHOR DETAILS SHOWING THE REQUIRED REACTION FORCES INCLUDING THE ANCHOR BOLT SIZE, MATERIAL, AND GRADE.
3. ALL CALCULATIONS AND DESIGN RELATED TO CONCRETE INCLUDING STRENGTH, ANCHOR BOLT EMBEDMENT DEPTH, AND EPOXY SELECTION BY OTHERS.
4. STRUCTURAL DESIGN BY AWC WILL BE AUTHENTICATED BY A 3RD PARTY STRUCTURAL ENGINEER REGISTERED IN THE STATE OF ALASKA, USA. ISSUED FOR CONSTRUCTION (IFC) ONLY.
5. ALL TANK, SKID, PLATFORM & STAIR WELDING TO CONFORM TO CSA W47.1 (STEEL, OR CSA W47.2 (ALUMINUM).
6. ALL WELDED PIPE SPOOLS TO CONFORM TO ASME B31.3.
7. ALL AWC ALUMINUM TANKS ARE NSF61 COMPLIANT WHEN THE WATER IS WITHIN A PH RANGE OF 6-9.
8. ALL WETTED FASTENERS INSIDE TANK TO BE ISOLATED FROM DISSIMILAR METAL CONTACT.

FINISH

1. ALL WELDS TO BE CLEANED USING A STAINLESS STEEL WIRE BRUSH.
2. ALL WELDED SS WATER SERVICE PIPING TO BE PICKLED & PASSIVATED AS PER ASTM A967-A967M-17 AND ASTM A380 / A380M-17 USING AVESTA RED ONE 240.

TESTING

1. ALL WELDS TO BE VISUALLY INSPECTED FOR DEFECTS.
2. ALL PIPING TO BE HYDROTESTED TO ASME B31.3 STANDARDS.

ELECTRICAL

1. MINIMUM 3ft OF CLEARANCE REQUIRED IN FRONT OF ANY ELECTRICAL PANEL / JUNCTION BOX.

INSTALLATION

1. ISOLATION MEMBRANE IS REQUIRED BETWEEN THE CONCRETE FLOOR AND THE BOTTOM OF THE COLUMN(S) BASEPLATE. MEMBRANE TO BE SUPPLIED AND INSTALLED BY OTHERS. THE RECOMMENDED LAYOUT DIMENSIONS CAN BE FOUND ON 17805-PI-LAY-001.
2. SUPPLY AND INSTALLATION OF SEISMIC ANCHOR BOLTS TO BE SUPPLIED AND INSTALLED BY OTHERS. NOTE: A 1" GAP FOR GROUTING HAS BEEN INCORPORATED FOR UNDER THE STRUCTURE MOUNTING PLATES.
3. ANY INTERCONNECTING PIPING BETWEEN AWC'S EQUIPMENT AND THE RAPID MIXER/FLOW DISTRIBUTOR TANK TO BE DESIGNED, SUPPLIED & INSTALLED BY OTHERS.
4. TANK NOZZLES SHALL NOT BE SUBJECTED TO EXTERNAL PIPING FORCES AND MOMENTS. ZERO LOADING WILL BE ACCEPTED.
5. DESIGN LOADS DO NOT INCLUDE SUPPORT OF PIPING OR OTHER EQUIPMENT. THE STRUCTURE FOR THE MIXER/DISTRIBUTION TANK SHALL NOT BE USED TO SUPPORT ANY PIPING WITHOUT FIRST CONSULTING AWC

SHIPPED LOOSE ITEMS

1. SEE NOTES ON PROJECT PIPING AND INSTRUMENT DIAGRAM (17805-PR-PID-001) FOR VALVE STEM EXTENSIONS OR CHAIN WHEEL ACTUATORS, IF APPLICABLE. IF NO NOTE IS PROVIDED ON THE P&ID, THE VALVE WILL BE SHIPPED WITH A SUPPLIER STANDARD ACTUATOR OR HANDLE
2. SHIPPED LOOSE ITEMS:
   - ALUMINUM STRUCTURAL FRAME

ESTIMATED WEIGHTS (W/ EQUIPMENT)

1. FLOW DISTRIBUTOR TANK (WITHOUT SUPPORT STRUCTURE)

DRY WEIGHT (TANK ONLY)	2,300 LBS
DRY WEIGHT (AS SHIPPED, PARTIALLY ASSEMBLED)	2,400 LBS
DRY WEIGHT (FULLY ASSEMBLED)	2,800 LBS
OPERATING WEIGHT (WITH WATER)	17,000 LBS

2. SUPPORT STRUCTURE

WEIGHT	1,100 LBS

LEGEND

- BY AWC
- BY OTHERS
- FUTURE
- 10 / HV-01 — ITEM NUMBER / P&ID TAG NUMBER
- TP-01 — P&ID TIE POINT NUMBER

PARTS LIST

ITEM	QTY	DESCRIPTION	SIZE (in)	MATERIAL	MANUFACTURER	MODEL #
1	1	RAPID MIXER / FLOW DISTRIBUTOR TANK	11' 6" L X 6' W X 6' H	ALUMINUM	AWC	CUSTOM
2	2	RAPID MIXER, BOTH STAGES	17" DIA	316 SS	AFX	AMX150
3	3	BALL VALVE, FNPT	2"	316 SS	MA STEWART	G2E
4	3	ANODE ASSEMBLY		MAGNESIUM / AL-6061-T6	AWC	N/A
5	1	LEVEL TRANSMITTER, RADAR	1-1/2"	PVDF	VEGA	VEGAPULS PS31.XXXXXNQHB
6	2	CONTROL STATION			ABB	MEP2-0
7	2	DISCONNECT SWITCH			ABB	EOT32U3P4-P

TIE-POINT SCHEDULE

ITEM	DESCRIPTION	SIZE (in)	TYPE	SERVICE
01-TP-020	INFLUENT	14"	FLANGE, FF, #150	RAW WATER
01-TP-023	FLOW TO DAF TRAIN 1	10"	FLANGE, FF, #150	RAW WATER
01-TP-024	FLOW TO DAF TRAIN 2	10"	FLANGE, FF, #150	RAW WATER
01-TP-025	FLOW TO DAF TRAIN 3	10"	FLANGE, FF, #150	RAW WATER
01-TP-026	OVERFLOW	10"	FLANGE, FF, #150	OVERFLOW
01-TP-027	OVERFLOW	10"	FLANGE, FF, #150	OVERFLOW

SHEET INDEX:

1: GENERAL NOTES & PART LISTS
2: ISO VIEWS
3: ASSEMBLED ELEVATIONS
4: PLAN VIEW
5: TANK ELEVATIONS
6: TANK ELEVATIONS
7: SECTION A
8: SECTIONS B & C
9: SHIPPING ENVELOPE (TANK)
10: SHIPPING ENVELOPE (FRAME)
11: ANCHORING

FLOW DISTRIBUTOR TANK
QTY: 1 REQUIRED

NOTES:

ENGINEER'S SEAL

PRELIMINARY
NOT FOR CONSTRUCTION

THE INFORMATION ON THIS DRAWING IS INTENDED FOR CONCEPTUAL DEVELOPMENT, PRELIMINARY DESIGN, OR FOR GUIDANCE ONLY. THIS DOCUMENT SHOULD NOT BE CONSIDERED A FINALIZED PROFESSIONAL WORK PRODUCT.

REV	DESCRIPTION	DATE	BY	CHK	APP
A	ISSUED FOR REVIEW	21-FEB-23	SBW	JE	FC

REVISIONS

9087A 198 Street Langley, BC Canada V1M 3B1
Phone : 604-638-0760 Fax: 604-638-0795
www.awcsolutions.ca

THIS DRAWING IS THE PROPERTY OF AWC AND CONTAINS PROPRIETARY AND CONFIDENTIAL INFORMATION WHICH MUST NOT BE DUPLICATED, USED OR DISCLOSED OTHER THAN EXPRESSLY AUTHORIZED BY AWC.

CLIENT: CITY & BOROUGH OF WRANGELL
PROJECT: WRANGELL WTP
TITLE: RAPID MIXER / FLOW DISTRIBUTOR TANK GENERAL ARRANGEMENT DRAWING

SCALE	PROJECTION	DEFAULT UNITS	SHEET SIZE	SHEET
NTS		in	17 x 11	1 OF 11

DRAWING NO. **17805-PI-GAD-100** REV **A**

FILE: M:\Shared\Customers\CRW Engineering\17805 Wrangell AK\5 Engineering\5.13 Piping\5.13.H Diagrams & Dwgs (2D)\5.13.H.1 GAs & Elev Dwgs

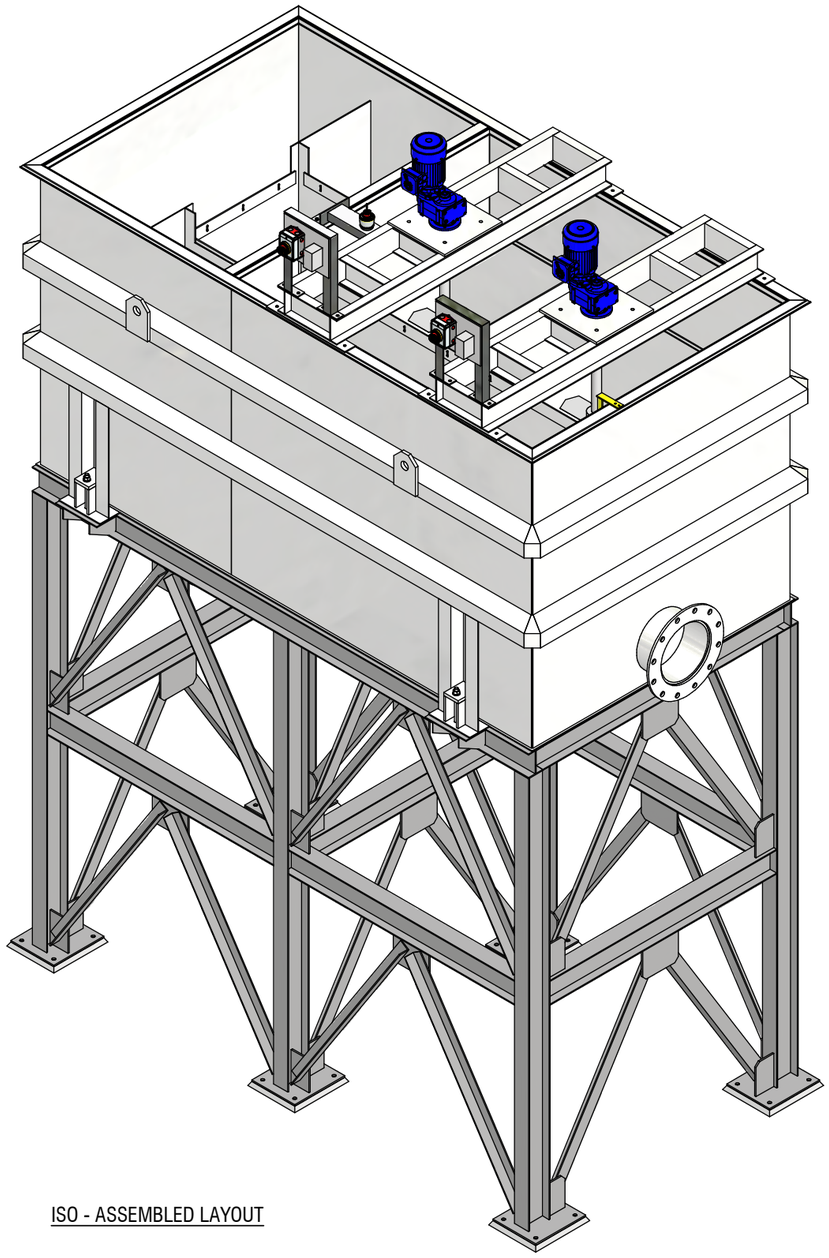

ISO - ASSEMBLED LAYOUT

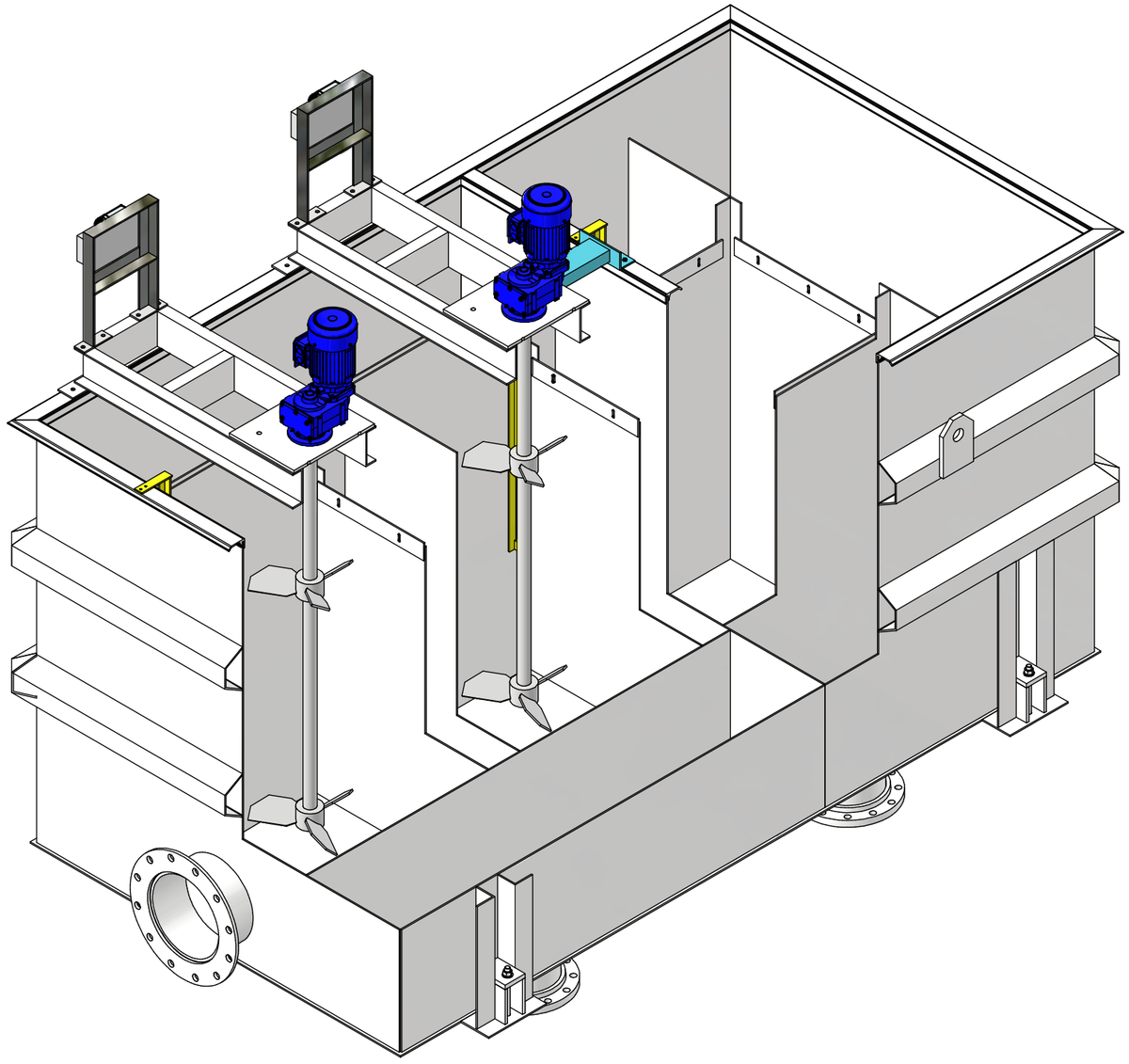

NOTES:

ENGINEER'S SEAL

PRELIMINARY
NOT FOR CONSTRUCTION

THE INFORMATION ON THIS DRAWING IS INTENDED FOR CONCEPTUAL DEVELOPMENT, PRELIMINARY DESIGN, OR FOR GUIDANCE ONLY. THIS DOCUMENT SHOULD NOT BE CONSIDERED A FINALIZED PROFESSIONAL WORK PRODUCT.

REV	DESCRIPTION	DATE	BY	CHK	APP
A	ISSUED FOR REVIEW	21-FEB-23	~~SBW~~	~~JdE~~	~~EG~~

REVISIONS

9087A 198 Street Langley, BC Canada V1M 3B1
Phone : 604-638-0760 Fax: 604-638-0795
www.awcsolutions.ca

THIS DRAWING IS THE PROPERTY OF AWC AND CONTAINS PROPRIETARY AND CONFIDENTIAL INFORMATION WHICH MUST NOT BE DUPLICATED, USED OR DISCLOSED OTHER THAN EXPRESSLY AUTHORIZED BY AWC.

CLIENT: CITY & BOROUGH OF WRANGELL

PROJECT: WRANGELL WTP

TITLE: RAPID MIXER / FLOW DISTRIBUTOR TANK GENERAL ARRANGEMENT DRAWING

SCALE	PROJECTION	DEFAULT UNITS	SHEET SIZE	SHEET
NTS		in	17 x 11	2 OF 11

DRAWING NO. **17805-PI-GAD-100** REV **A**

FILE: M:\Shared\Customers\CRW Engineering\17805 Wrangell AK\5 Engineering\5.13 Piping\5.13.H Diagrams & Dwgs (2D)\5.13.H.1 GAs & Elev Dwgs

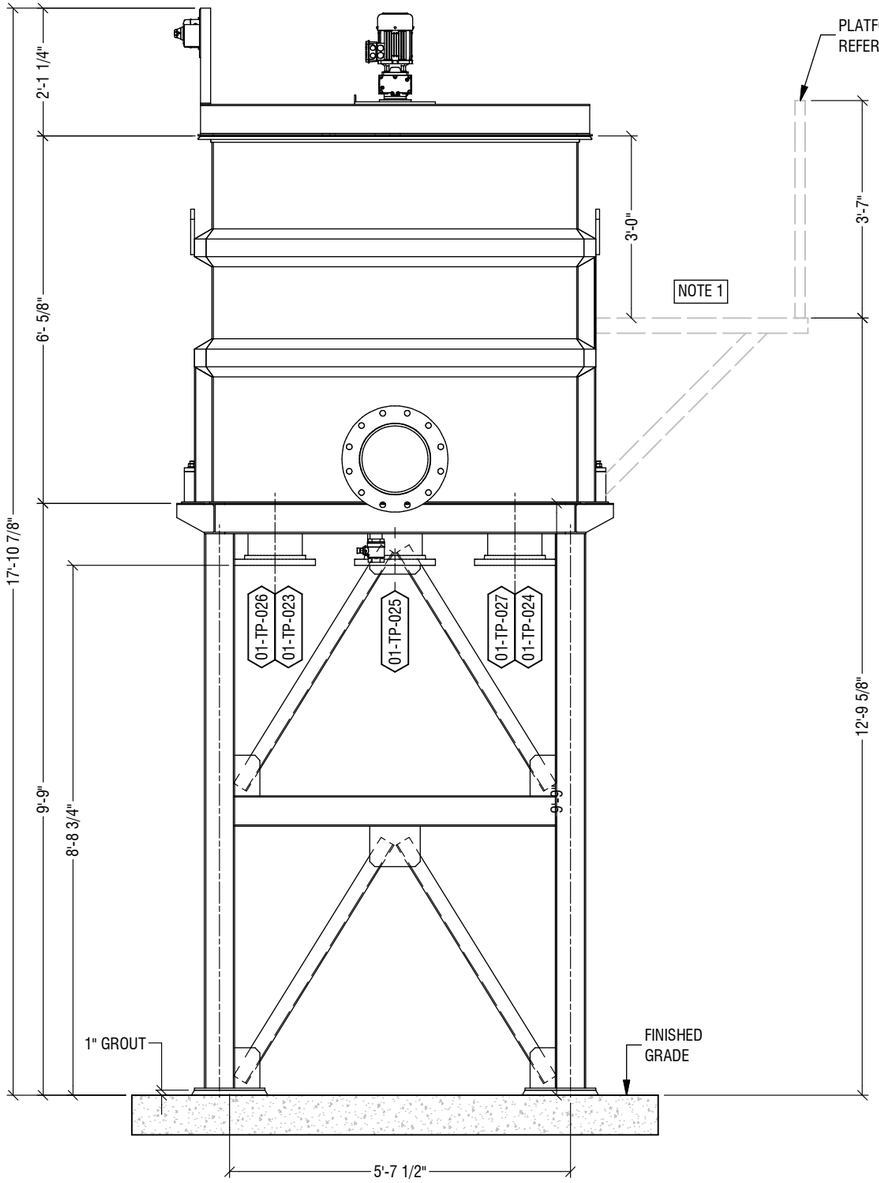

SOUTH ELEVATION
(SOME BRACING ON SUPPORT
NOT SHOWN FOR CLARITY)

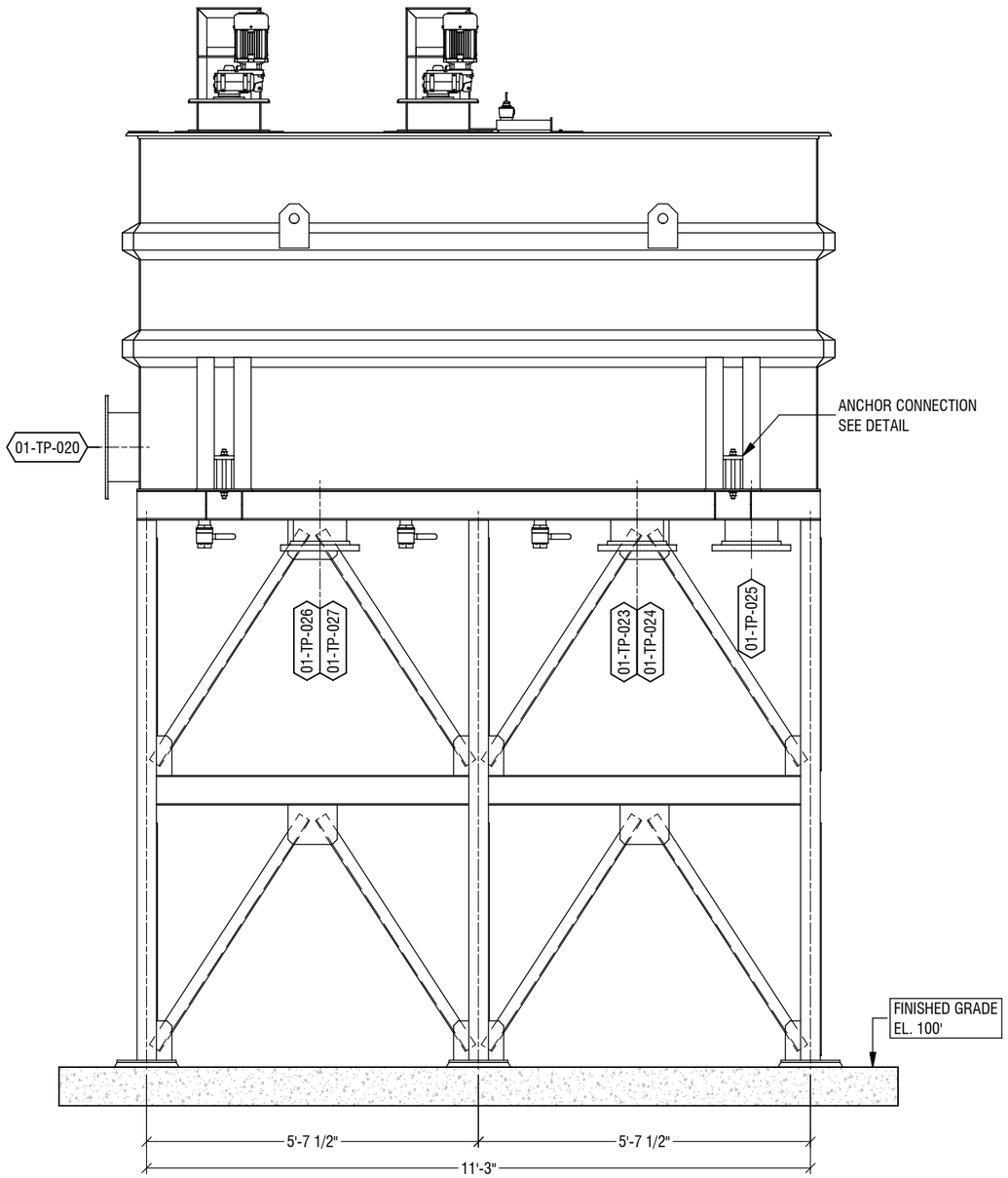

EAST ELEVATION
(SOME BRACING ON SUPPORT
NOT SHOWN FOR CLARITY)

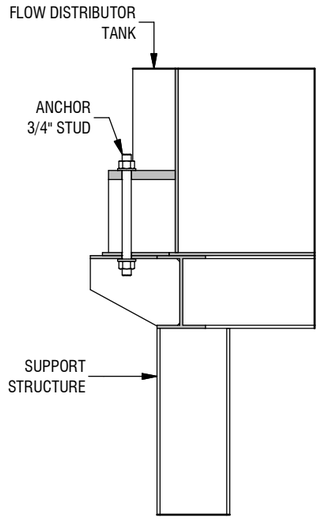

CONNECTION DETAIL
(TYP. 4 PLACES)

NOTES:

1. SEE 17805-PI-GAD-900 FOR PLATFORM LOCATIONS AND DETAILS.

ENGINEER'S SEAL

PRELIMINARY
NOT FOR CONSTRUCTION

THE INFORMATION ON THIS DRAWING IS INTENDED FOR CONCEPTUAL DEVELOPMENT, PRELIMINARY DESIGN, OR FOR GUIDANCE ONLY. THIS DOCUMENT SHOULD NOT BE CONSIDERED A FINALIZED PROFESSIONAL WORK PRODUCT.

REV	DESCRIPTION	DATE	BY	CHK	APP
A	ISSUED FOR REVIEW	21-FEB-23	SBW	JE	TG

REVISIONS

9087A 198 Street Langley, BC Canada V1M 3B1
Phone : 604-638-0760 Fax: 604-638-0795
www.awcsolutions.ca

THIS DRAWING IS THE PROPERTY OF AWC AND CONTAINS PROPRIETARY AND CONFIDENTIAL INFORMATION WHICH MUST NOT BE DUPLICATED, USED OR DISCLOSED OTHER THAN EXPRESSLY AUTHORIZED BY AWC.

CLIENT: CITY & BOROUGH OF WRANGELL

PROJECT: WRANGELL WTP

TITLE: RAPID MIXER / FLOW DISTRIBUTOR TANK GENERAL ARRANGEMENT DRAWING

SCALE	PROJECTION	DEFAULT UNITS	SHEET SIZE	SHEET
NTS		in	17 x 11	3 OF 11

DRAWING NO. **17805-PI-GAD-100** REV **A**

FILE: M:\Shared\Customers\CRW Engineering\17805 Wrangell AK\5 Engineering\5.13 Piping\5.13.H Diagrams & Dwgs (2D)\5.13.H.1 GAs & Elev Dwgs

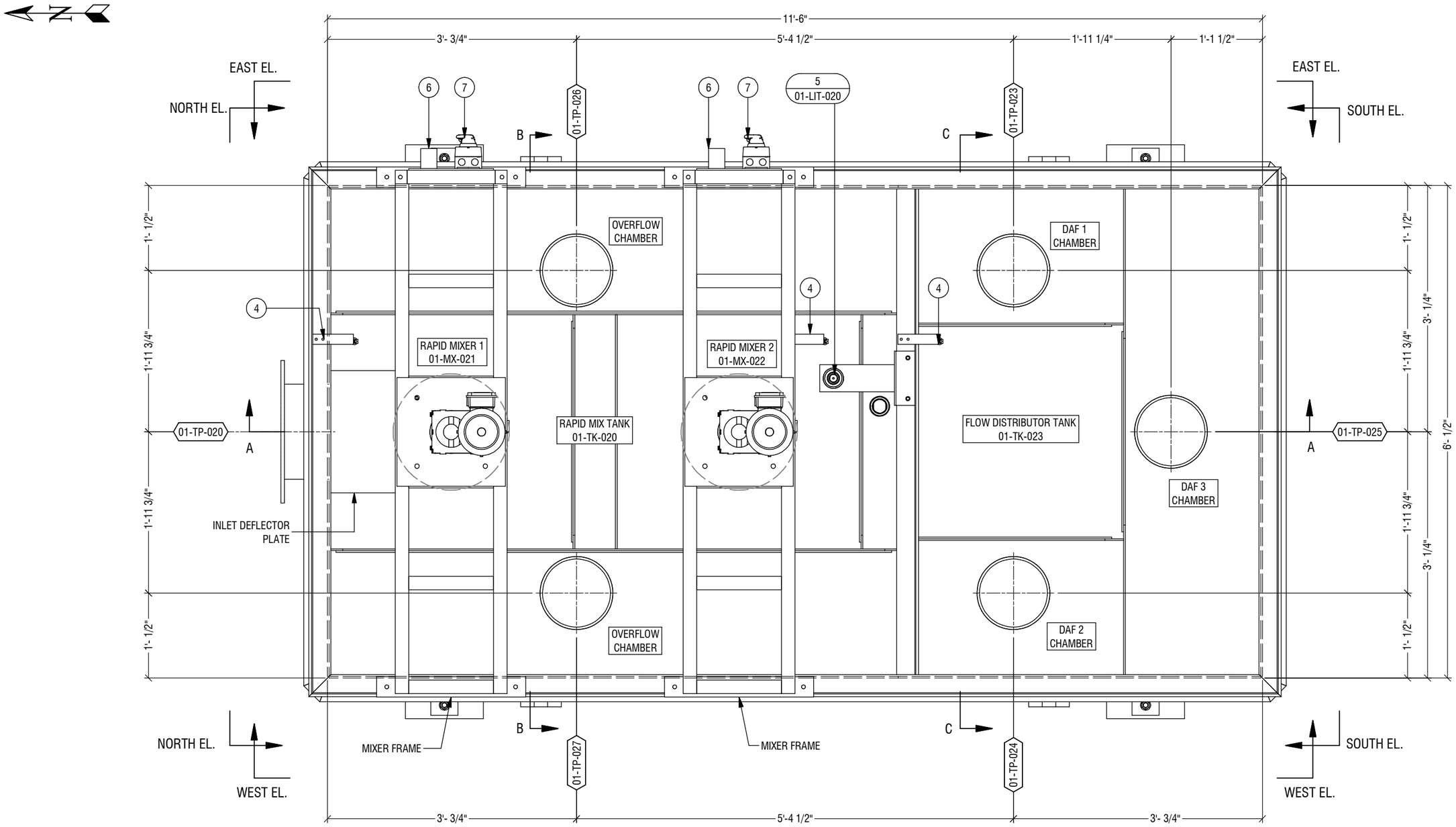

PLAN VIEW
RAPID MIXER / FLOW DISTRIBUTOR TANK

NOTES:

ENGINEER'S SEAL

PRELIMINARY
NOT FOR CONSTRUCTION

THE INFORMATION ON THIS DRAWING IS INTENDED FOR CONCEPTUAL DEVELOPMENT, PRELIMINARY DESIGN, OR FOR GUIDANCE ONLY. THIS DOCUMENT SHOULD NOT BE CONSIDERED A FINALIZED PROFESSIONAL WORK PRODUCT.

REV	DESCRIPTION	DATE	BY	CHK	APP
A	ISSUED FOR REVIEW	21-FEB-23	SBW	JE	TG

REVISIONS

9087A 198 Street Langley, BC Canada V1M 3B1
Phone : 604-638-0760 Fax: 604-638-0795
www.awcsolutions.ca

THIS DRAWING IS THE PROPERTY OF AWC AND CONTAINS PROPRIETARY AND CONFIDENTIAL INFORMATION WHICH MUST NOT BE DUPLICATED, USED OR DISCLOSED OTHER THAN EXPRESSLY AUTHORIZED BY AWC.

CLIENT: CITY & BOROUGH OF WRANGELL
PROJECT: WRANGELL WTP
TITLE: RAPID MIXER / FLOW DISTRIBUTOR TANK GENERAL ARRANGEMENT DRAWING

SCALE	PROJECTION	DEFAULT UNITS	SHEET SIZE	SHEET
NTS		in	17 x 11	4 OF 11

DRAWING NO. **17805-PI-GAD-100** REV **A**

FILE: M:\Shared\Customers\CRW Engineering\17805 Wrangell AK\5 Engineering\5.13 Piping\5.13.H Diagrams & Dwgs (2D)\5.13.H.1 GAs & Elev Dwgs

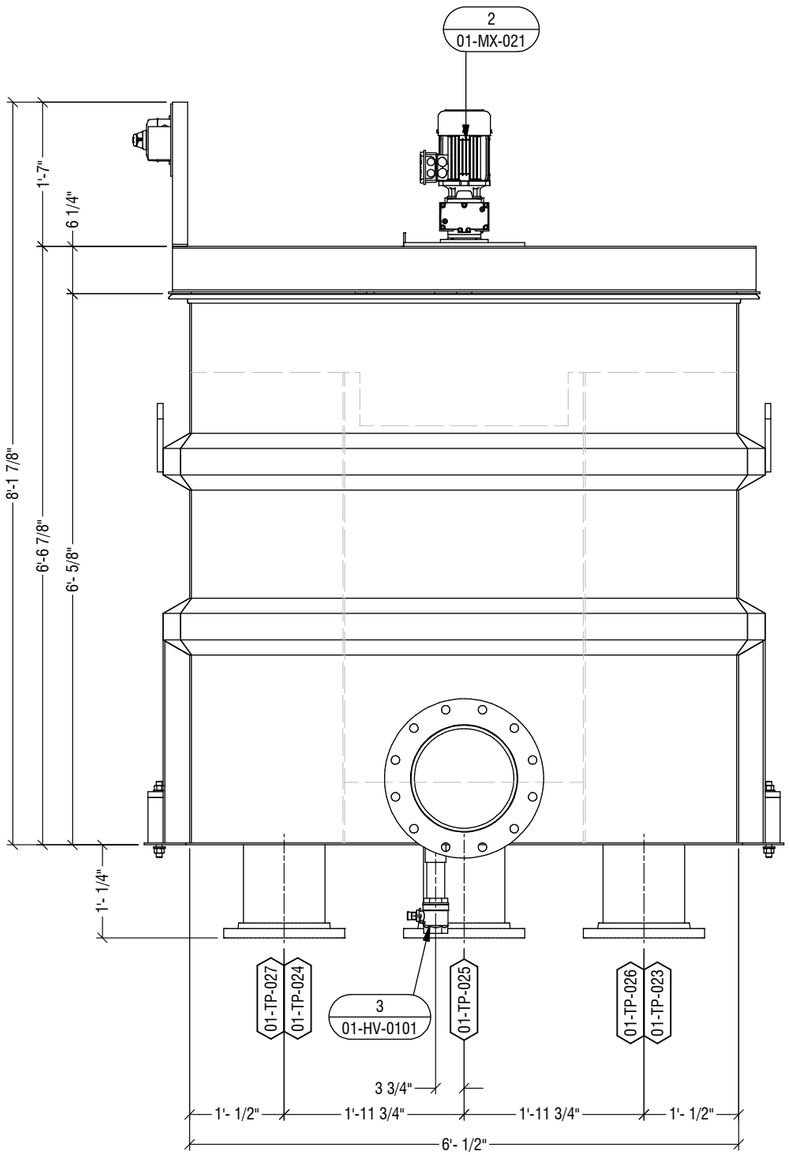

NORTH EL.

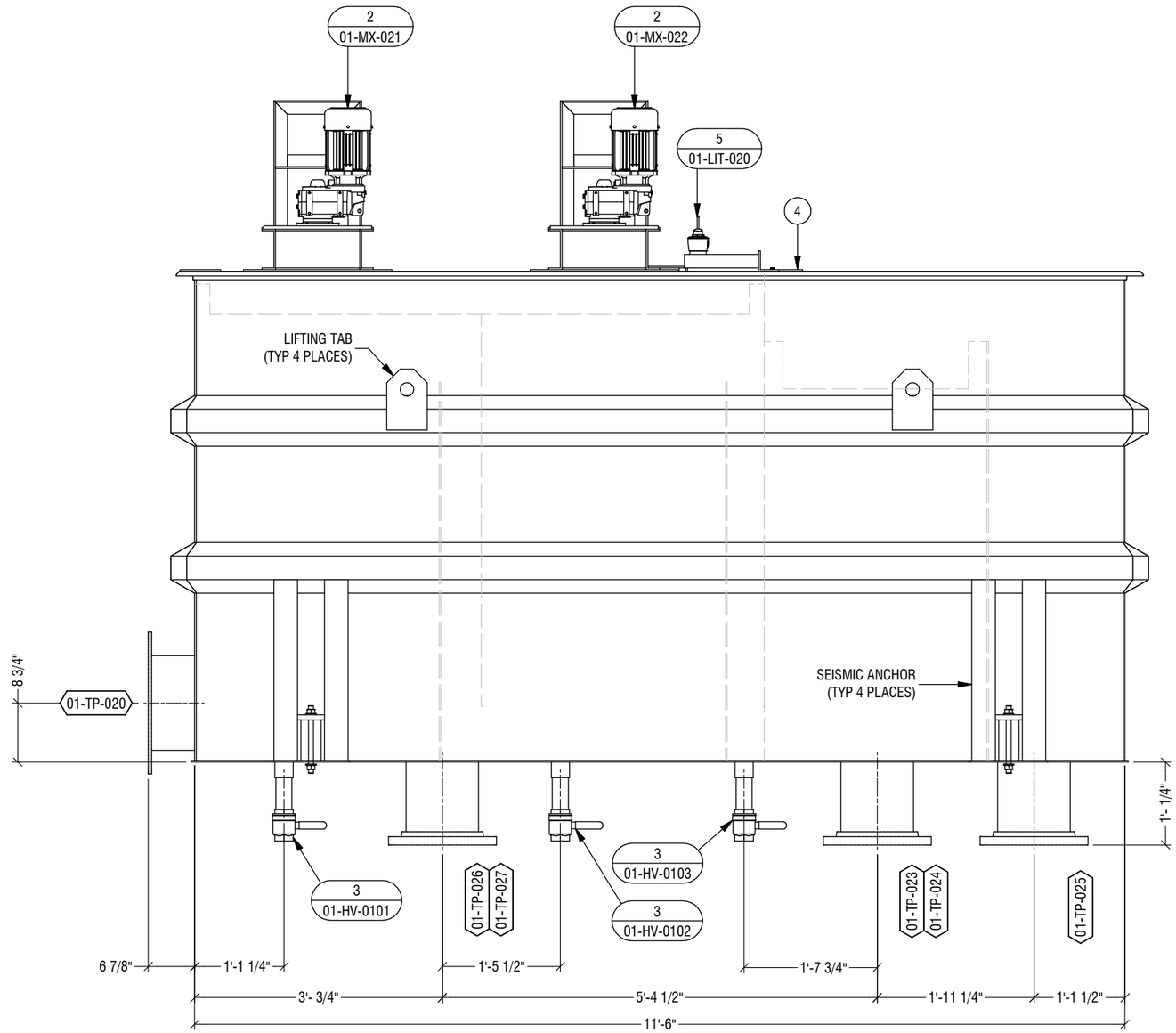

WEST EL.

NOTES:

ENGINEER'S SEAL

PRELIMINARY
NOT FOR CONSTRUCTION

THE INFORMATION ON THIS DRAWING IS INTENDED FOR CONCEPTUAL DEVELOPMENT, PRELIMINARY DESIGN, OR FOR GUIDANCE ONLY. THIS DOCUMENT SHOULD NOT BE CONSIDERED A FINALIZED PROFESSIONAL WORK PRODUCT.

REV	DESCRIPTION	DATE	BY	CHK	APP
A	ISSUED FOR REVIEW	21-FEB-23	SBW	JE	TC

REVISIONS

AWC
9087A 198 Street Langley, BC Canada V1M 3B1
Phone : 604-638-0760 Fax: 604-638-0795
www.awcsolutions.ca

THIS DRAWING IS THE PROPERTY OF AWC AND CONTAINS PROPRIETARY AND CONFIDENTIAL INFORMATION WHICH MUST NOT BE DUPLICATED, USED OR DISCLOSED OTHER THAN EXPRESSLY AUTHORIZED BY AWC.

CLIENT: CITY & BOROUGH OF WRANGELL

PROJECT: WRANGELL WTP

TITLE: RAPID MIXER / FLOW DISTRIBUTOR TANK GENERAL ARRANGEMENT DRAWING

SCALE	PROJECTION	DEFAULT UNITS	SHEET SIZE	SHEET
NTS		in	17 x 11	5 OF 11

DRAWING NO. **17805-PI-GAD-100** REV **A**

FILE: M:\Shared\Customers\CRW Engineering\17805 Wrangell AK\5 Engineering\5.13 Piping\5.13.H Diagrams & Dwgs (2D)\5.13.H.1 GAs & Elev Dwgs

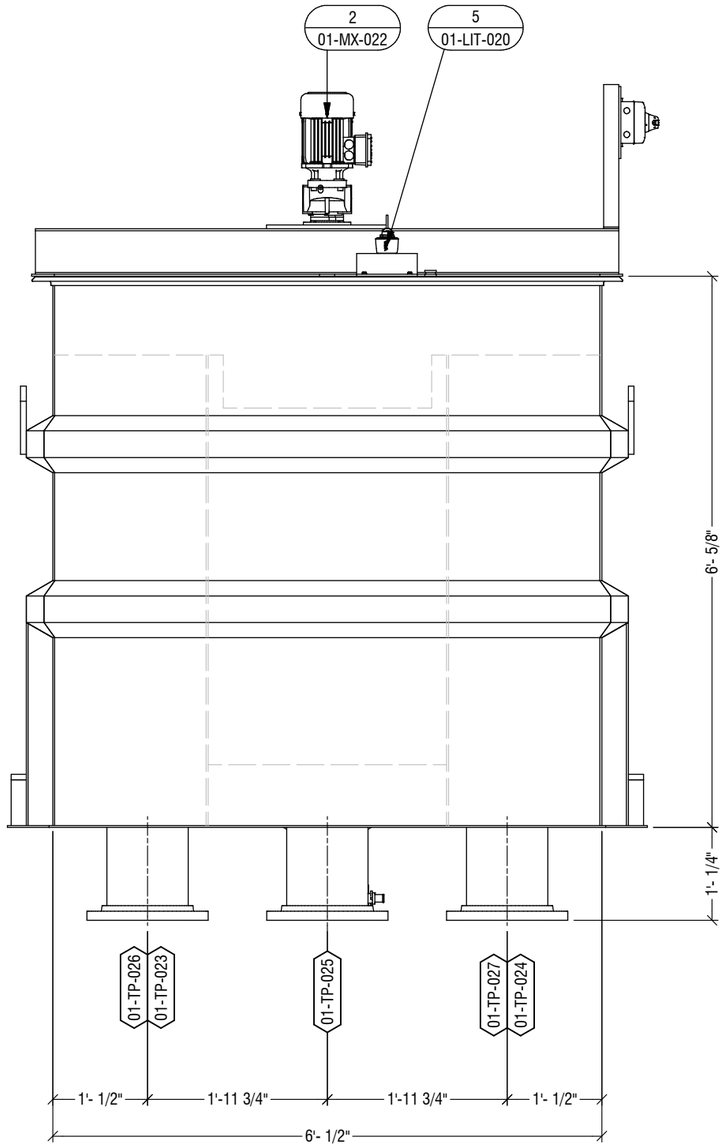

SOUTH EL.

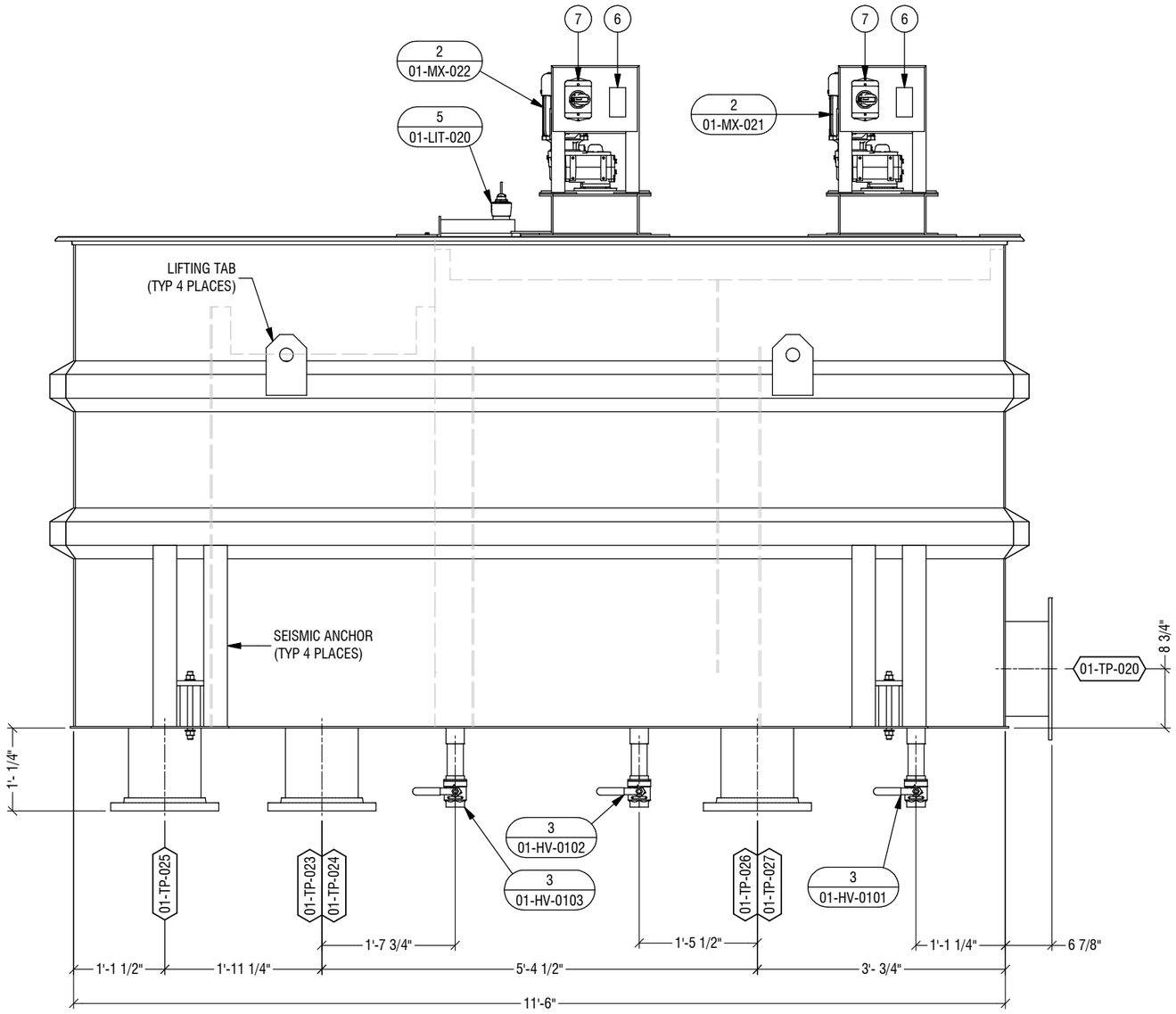

EAST EL.

NOTES:

ENGINEER'S SEAL

PRELIMINARY
NOT FOR CONSTRUCTION

THE INFORMATION ON THIS DRAWING IS INTENDED FOR CONCEPTUAL DEVELOPMENT, PRELIMINARY DESIGN, OR FOR GUIDANCE ONLY. THIS DOCUMENT SHOULD NOT BE CONSIDERED A FINALIZED PROFESSIONAL WORK PRODUCT.

REV	DESCRIPTION	DATE	BY	CHK	APP
A	ISSUED FOR REVIEW	21-FEB-23	SBW	JE	

REVISIONS

9087A 198 Street Langley, BC Canada V1M 3B1
Phone : 604-638-0760 Fax: 604-638-0795
www.awcsolutions.ca

THIS DRAWING IS THE PROPERTY OF AWC AND CONTAINS PROPRIETARY AND CONFIDENTIAL INFORMATION WHICH MUST NOT BE DUPLICATED, USED OR DISCLOSED OTHER THAN EXPRESSLY AUTHORIZED BY AWC.

CLIENT: CITY & BOROUGH OF WRANGELL

PROJECT: WRANGELL WTP

TITLE: RAPID MIXER / FLOW DISTRIBUTOR TANK GENERAL ARRANGEMENT DRAWING

SCALE	PROJECTION	DEFAULT UNITS	SHEET SIZE	SHEET
NTS		in	17 x 11	6 OF 11

DRAWING NO. **17805-PI-GAD-100** REV **A**

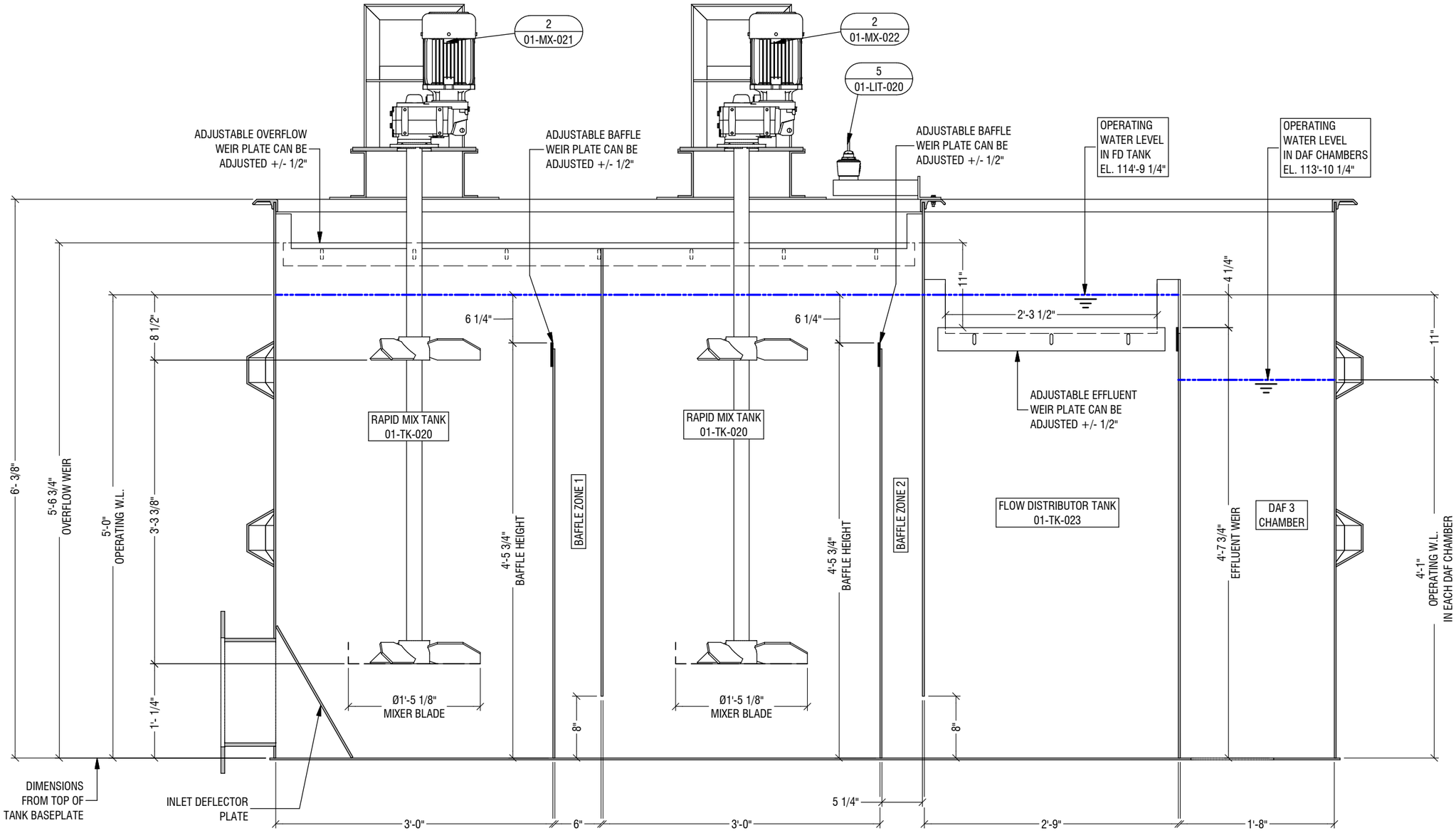

SECTION A-A
INTERNAL ELEVATION
(LOWER NOZZLES NOT SHOWN FOR CLARITY)

NOTES:

ENGINEER'S SEAL

PRELIMINARY NOT FOR CONSTRUCTION

THE INFORMATION ON THIS DRAWING IS INTENDED FOR CONCEPTUAL DEVELOPMENT, PRELIMINARY DESIGN, OR FOR GUIDANCE ONLY. THIS DOCUMENT SHOULD NOT BE CONSIDERED A FINALIZED PROFESSIONAL WORK PRODUCT.

REV	DESCRIPTION	DATE	BY	CHK	APP
A	ISSUED FOR REVIEW	21-FEB-23	SBW	JE	TEL

REVISIONS

AWC
9087A 198 Street Langley, BC Canada V1M 3B1
Phone : 604-638-0760 Fax: 604-638-0795
www.awcsolutions.ca

THIS DRAWING IS THE PROPERTY OF AWC AND CONTAINS PROPRIETARY AND CONFIDENTIAL INFORMATION WHICH MUST NOT BE DUPLICATED, USED OR DISCLOSED OTHER THAN EXPRESSLY AUTHORIZED BY AWC.

CLIENT: CITY & BOROUGH OF WRANGELL
PROJECT: WRANGELL WTP
TITLE: RAPID MIXER / FLOW DISTRIBUTOR TANK GENERAL ARRANGEMENT DRAWING

SCALE	PROJECTION	DEFAULT UNITS	SHEET SIZE	SHEET
NTS		in	17 x 11	7 OF 11

DRAWING NO. 17805-PI-GAD-100 REV A

RAPID MIX TANK 01-TK-020

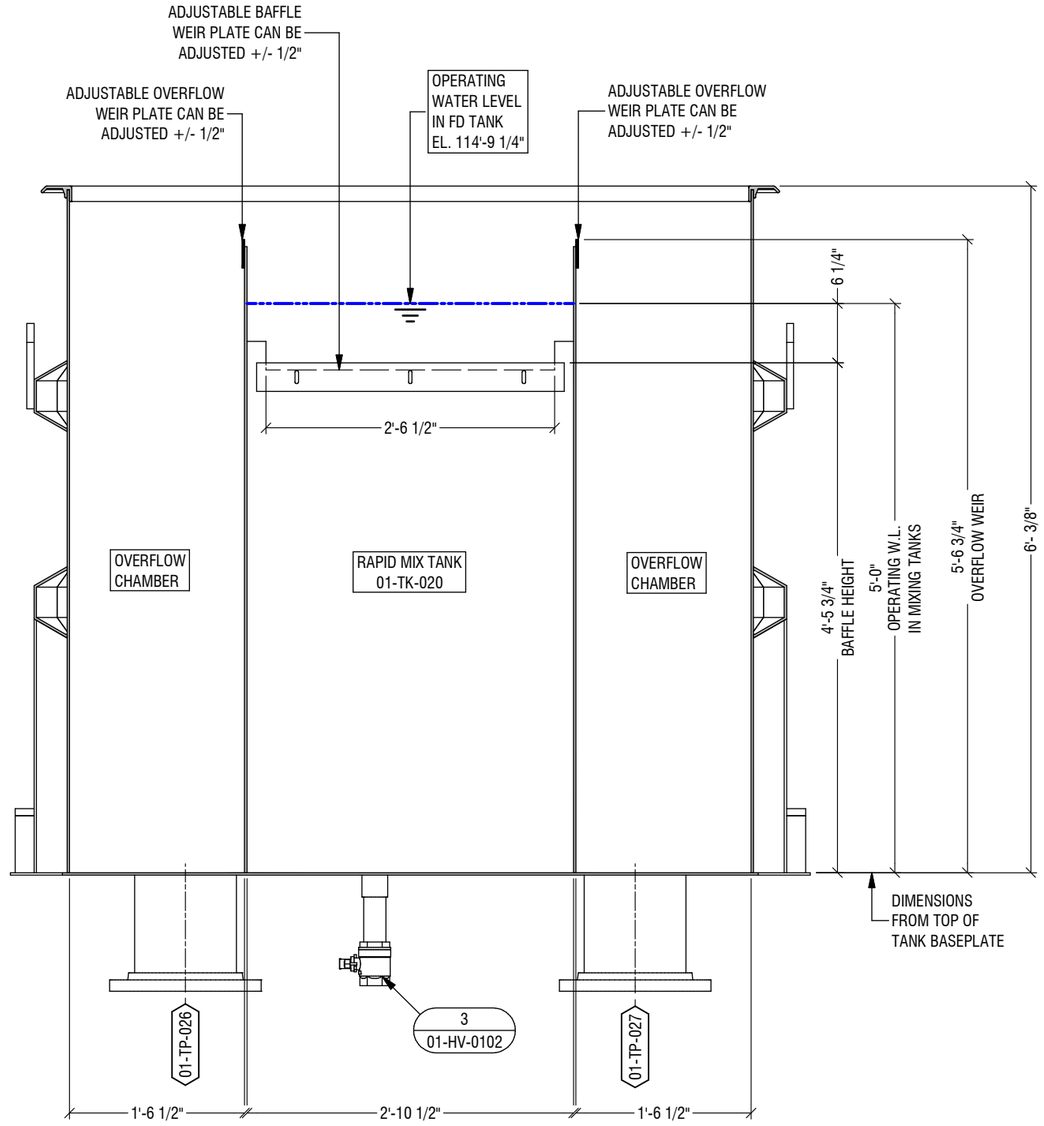

SECTION B-B
RAPID MIX TANK
(TYP. STAGE 1 & 2)

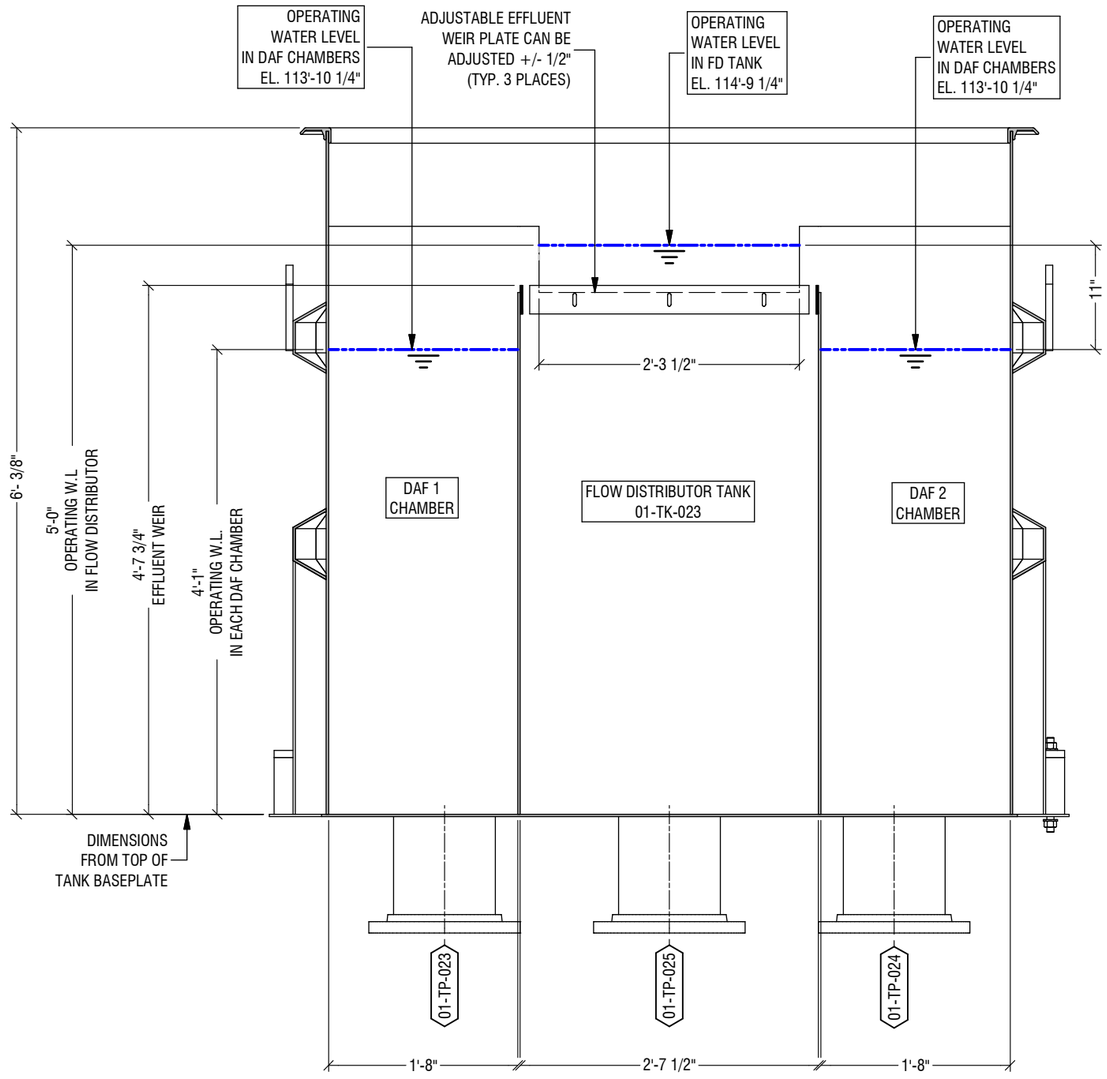

SECTION C-C
FLOW DISTRIBUTION CHAMBER

NOTES:

ENGINEER'S SEAL

PRELIMINARY
NOT FOR CONSTRUCTION

THE INFORMATION ON THIS DRAWING IS INTENDED FOR CONCEPTUAL DEVELOPMENT, PRELIMINARY DESIGN, OR FOR GUIDANCE ONLY. THIS DOCUMENT SHOULD NOT BE CONSIDERED A FINALIZED PROFESSIONAL WORK PRODUCT.

REV	DESCRIPTION	DATE	BY	CHK	APP
A	ISSUED FOR REVIEW	21-FEB-23	SBW	JJE	TEL

REVISIONS

9087A 198 Street Langley, BC Canada V1M 3B1
Phone : 604-638-0760 Fax: 604-638-0795
www.awcsolutions.ca

THIS DRAWING IS THE PROPERTY OF AWC AND CONTAINS PROPRIETARY AND CONFIDENTIAL INFORMATION WHICH MUST NOT BE DUPLICATED, USED OR DISCLOSED OTHER THAN EXPRESSLY AUTHORIZED BY AWC.

CLIENT: CITY & BOROUGH OF WRANGELL
PROJECT: WRANGELL WTP
TITLE: RAPID MIXER / FLOW DISTRIBUTOR TANK GENERAL ARRANGEMENT DRAWING

SCALE	PROJECTION	DEFAULT UNITS	SHEET SIZE	SHEET
NTS		in	17 x 11	8 OF 11

DRAWING NO. **17805-PI-GAD-100** REV **A**

FILE: M:\Shared\Customers\CRW Engineering\17805 Wrangell AK\5 Engineering\5.13 Piping\5.13.H Diagrams & Dwgs (2D)\5.13.H.1 GAs & Elev Dwgs

SHIPPING ENVELOPE / LIFTING & COG DETAILS (FLOW DISTRIBUTOR TANK)

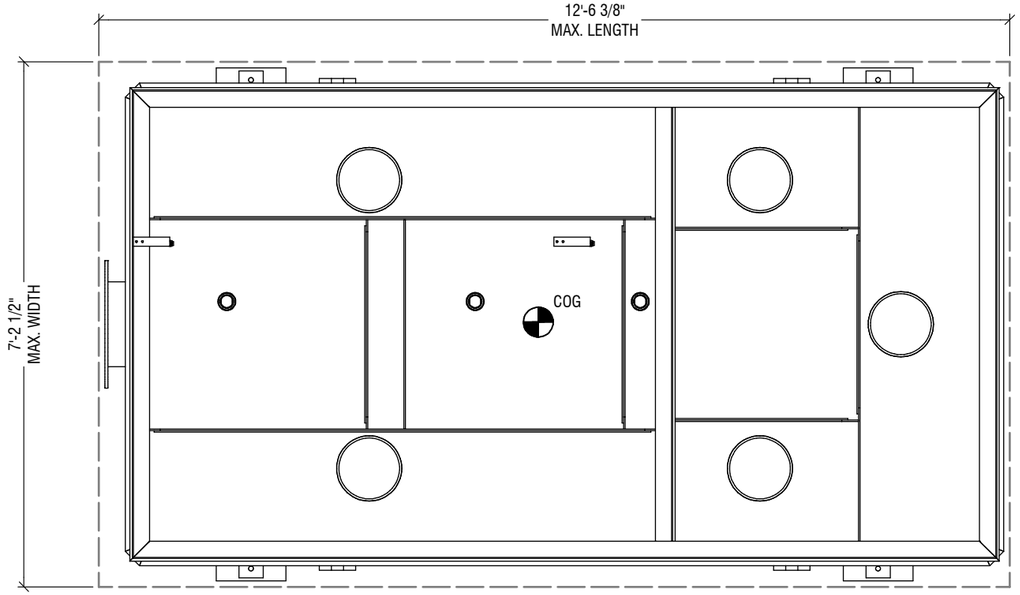

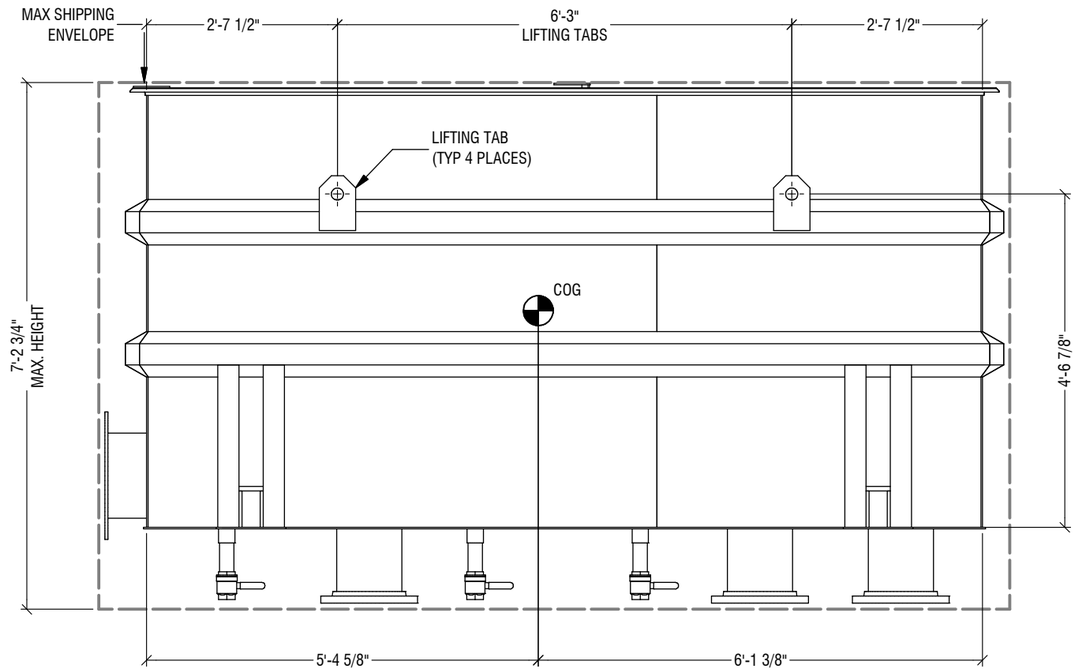

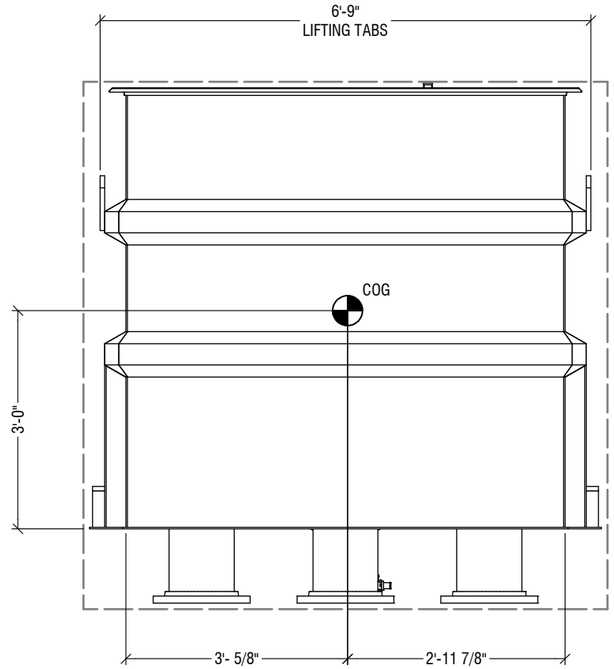

NOTES:
1. SEE COVER SHEET FOR ESTIMATED WEIGHTS.

ENGINEER'S SEAL

PRELIMINARY
NOT FOR CONSTRUCTION

THE INFORMATION ON THIS DRAWING IS INTENDED FOR CONCEPTUAL DEVELOPMENT, PRELIMINARY DESIGN, OR FOR GUIDANCE ONLY. THIS DOCUMENT SHOULD NOT BE CONSIDERED A FINALIZED PROFESSIONAL WORK PRODUCT.

REV	DESCRIPTION	DATE	BY	CHK	APP
A	ISSUED FOR REVIEW	21-FEB-23	SBW	JE	JEE

REVISIONS

AWC
9087A 198 Street Langley, BC Canada V1M 3B1
Phone : 604-638-0760 Fax: 604-638-0795
www.awcsolutions.ca

THIS DRAWING IS THE PROPERTY OF AWC AND CONTAINS PROPRIETARY AND CONFIDENTIAL INFORMATION WHICH MUST NOT BE DUPLICATED, USED OR DISCLOSED OTHER THAN EXPRESSLY AUTHORIZED BY AWC.

CLIENT: CITY & BOROUGH OF WRANGELL
PROJECT: WRANGELL WTP
TITLE: RAPID MIXER / FLOW DISTRIBUTOR TANK GENERAL ARRANGEMENT DRAWING

SCALE	PROJECTION	DEFAULT UNITS	SHEET SIZE	SHEET
NTS		in	17 x 11	9 OF 11

DRAWING NO. 17805-PI-GAD-100 REV A

FILE: M:\Shared\Customers\CRW Engineering\17805 Wrangell AK\5 Engineering\5.13 Piping\5.13.H Diagrams & Dwgs (2D)\5.13.H.1 GAs & Elev Dwgs

SHIPPING ENVELOPE / LIFTING & COG DETAILS (SUPPORT FRAME)

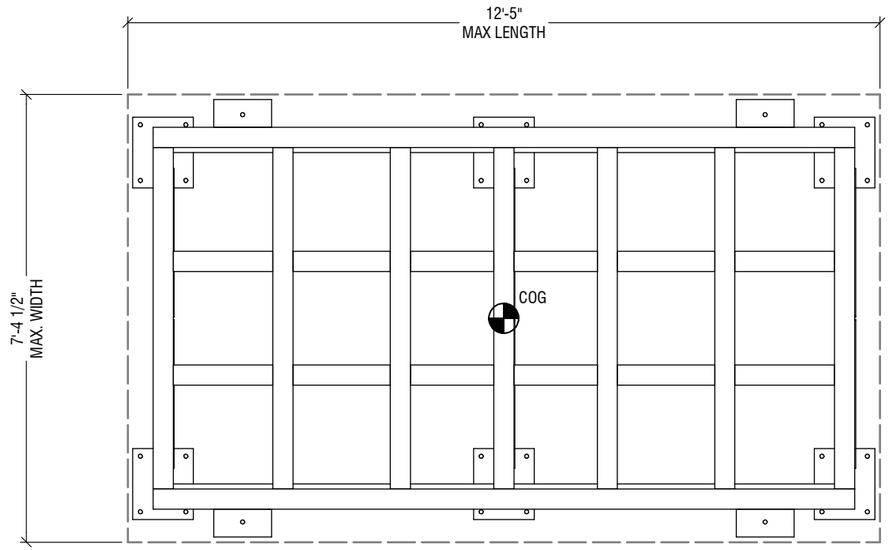

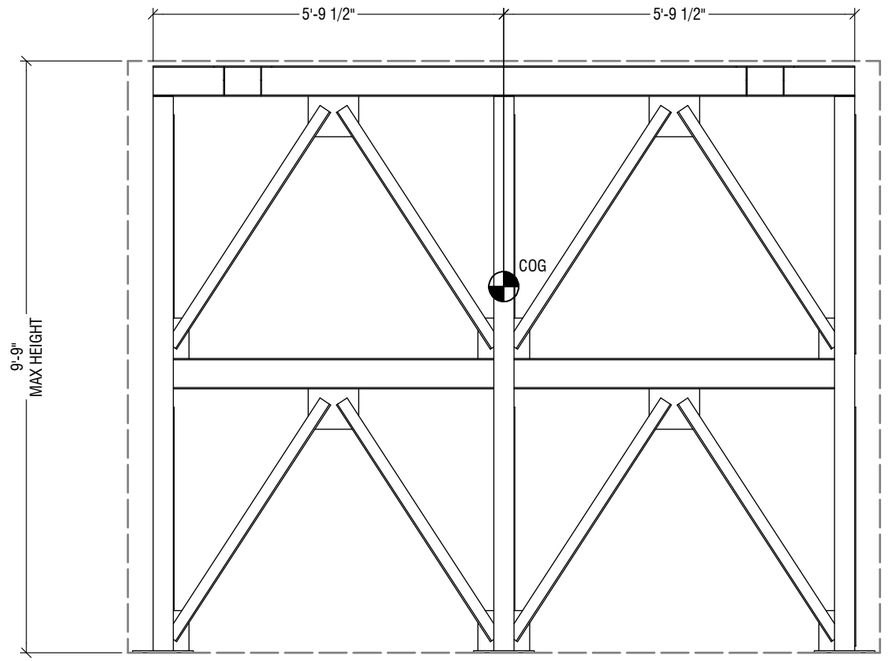

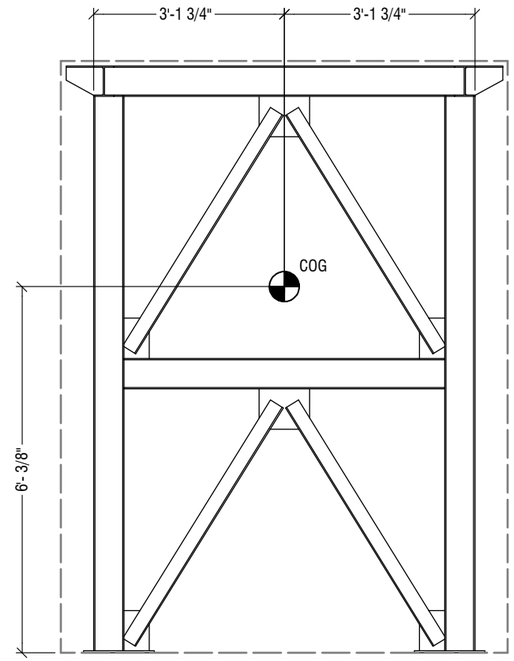

NOTES:
1. SEE COVER SHEET FOR ESTIMATED WEIGHTS.

ENGINEER'S SEAL

PRELIMINARY
NOT FOR CONSTRUCTION

THE INFORMATION ON THIS DRAWING IS INTENDED FOR CONCEPTUAL DEVELOPMENT, PRELIMINARY DESIGN, OR FOR GUIDANCE ONLY. THIS DOCUMENT SHOULD NOT BE CONSIDERED A FINALIZED PROFESSIONAL WORK PRODUCT.

REV	DESCRIPTION	DATE	BY	CHK	APP
A	ISSUED FOR REVIEW	21-FEB-23	SBW	JE	JEE

REVISIONS

9087A 198 Street Langley, BC Canada V1M 3B1
Phone : 604-638-0760 Fax: 604-638-0795
www.awcsolutions.ca

THIS DRAWING IS THE PROPERTY OF AWC AND CONTAINS PROPRIETARY AND CONFIDENTIAL INFORMATION WHICH MUST NOT BE DUPLICATED, USED OR DISCLOSED OTHER THAN EXPRESSLY AUTHORIZED BY AWC.

CLIENT: CITY & BOROUGH OF WRANGELL
PROJECT: WRANGELL WTP
TITLE: RAPID MIXER / FLOW DISTRIBUTOR TANK GENERAL ARRANGEMENT DRAWING

SCALE	PROJECTION	DEFAULT UNITS	SHEET SIZE	SHEET
NTS		in	17 x 11	10 OF 11

DRAWING NO. **17805-PI-GAD-100** REV **A**

FILE: M:\Shared\Customers\CRW Engineering\17805 Wrangell AK\5 Engineering\5.13 Piping\5.13.H Diagrams & Dwgs (2D)\5.13.H.1 GAs & Elev Dwgs

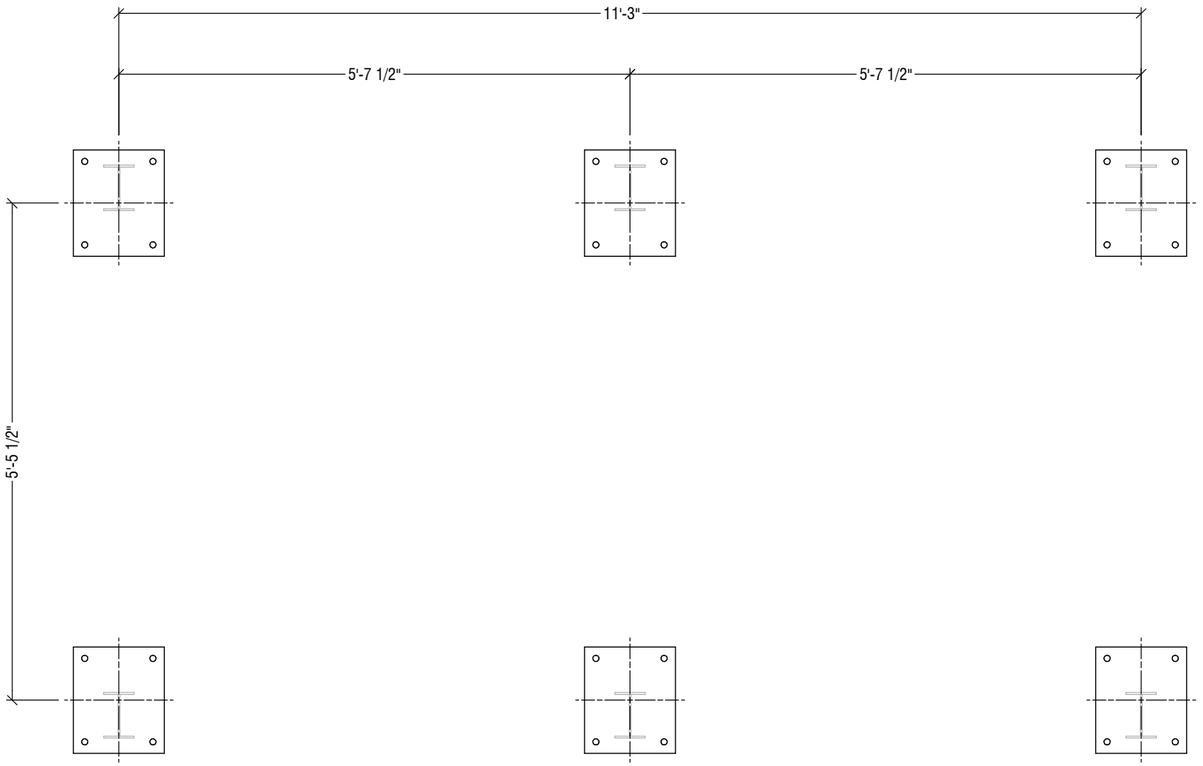

PLAN VIEW - CONCRETE ANCHORING
STRUCTURAL FRAME

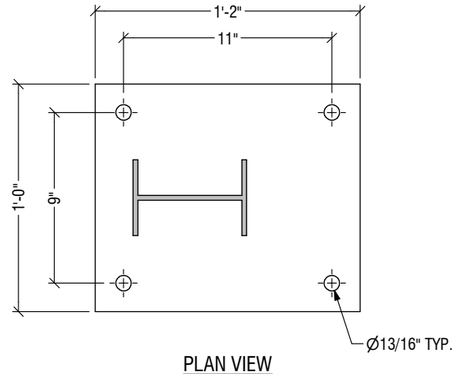

PLAN VIEW
FLOW DISTRIBUTOR
MOUNTING PAD

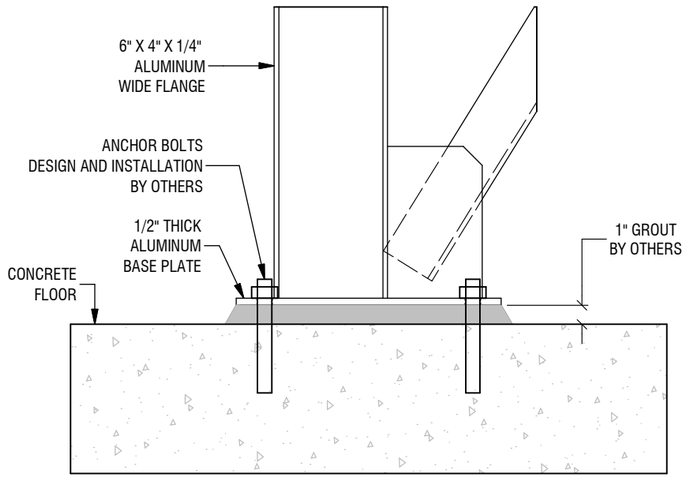

DETAIL A1
ANCHORING DETAIL

NOTES:

ENGINEER'S SEAL

PRELIMINARY
NOT FOR CONSTRUCTION

THE INFORMATION ON THIS DRAWING IS INTENDED FOR CONCEPTUAL DEVELOPMENT, PRELIMINARY DESIGN, OR FOR GUIDANCE ONLY. THIS DOCUMENT SHOULD NOT BE CONSIDERED A FINALIZED PROFESSIONAL WORK PRODUCT.

REV	DESCRIPTION	DATE	BY	CHK	APP
A	ISSUED FOR REVIEW	21-FEB-23	SBW	JJE	JJE

REVISIONS

9087A 198 Street Langley, BC Canada V1M 3B1
Phone : 604-638-0760 Fax: 604-638-0795
www.awcsolutions.ca

THIS DRAWING IS THE PROPERTY OF AWC AND CONTAINS PROPRIETARY AND CONFIDENTIAL INFORMATION WHICH MUST NOT BE DUPLICATED, USED OR DISCLOSED OTHER THAN EXPRESSLY AUTHORIZED BY AWC.

CLIENT: CITY & BOROUGH OF WRANGELL
PROJECT: WRANGELL WTP
TITLE: RAPID MIXER / FLOW DISTRIBUTOR TANK GENERAL ARRANGEMENT DRAWING

SCALE	PROJECTION	DEFAULT UNITS	SHEET SIZE	SHEET
NTS		in	17 x 11	11 OF 11

DRAWING NO. **17805-PI-GAD-100** REV **A**

FILE: M:\Shared\Customers\CRW Engineering\17805 Wrangell AK\5 Engineering\5.13 Piping\5.13.H Diagrams & Dwgs (2D)\5.13.H.1 GAs & Elev Dwgs

REFERENCE DRAWINGS

1. P&ID: 17805-PR-PID-001
2. PLANT LAYOUT: 17805-PI-LAY-001
3. PLATFORM & STAIR GENERAL ARRAIGNMENT 17805-PI-GAD-900
4. STANDARD LIFTING DETAILS: TPL-FAB-200-00

GENERAL

1. ALL TRAINS ARE IDENTICAL AND NOZZLE LOCATIONS ARE TYPICAL.
2. DIMENSIONS ARE SHOWN IN INCHES (FT-IN) UNLESS STATED OTHERWISE
3. ALL DIMENSIONS ARE REFERENCED FROM THE OUTSIDE FACE OF THE EXTERIOR WALL PLATES, UNLESS STATED OTHERWISE. ALL ELEVATION DIMENSIONS ARE REFERENCED FROM THE BOTTOM OF BASE PLATE (1/4" THICK).
4. TOLERANCES:
   TANK DIMENSIONS: +/- 1/4 in
   NOZZLE LOCATIONS: +/- 1/4 in
5. AWC PROVIDES CATHODIC PROTECTION FOR ALL ALUMINUM TANKS.
6. TIE POINT NUMBERS SHOWN ON THIS DRAWING REPRESENT TRAIN #1 ONLY, UNLESS SPECIFIED OTHERWISE.
   THE FIRST DIGIT OF EACH TAG # REFERS TO ITS OWN ASSIGNED TRAIN # (i.e. 02-TP-(x)00). THIS ALSO APPLIES TO EQUIPMENT, VALVE AND SPECIALTY ITEM NUMBERING (i.e. 02-SKM-(x)00 OR 02-SP-(X)000).

ENGINEERING, STANDARDS & SPECIFICATION

1. AWC WILL PERFORM SEISMIC ANCHOR SIZING AS PER THE SPECIFICATIONS AND APPLICABLE GOVERNING CODES AND STANDARDS.
2. AWC WILL PROVIDE STAMPED ANCHOR DETAILS SHOWING THE REQUIRED REACTION FORCES INCLUDING THE ANCHOR BOLT SIZE, MATERIAL, AND GRADE.
3. ALL CALCULATIONS AND DESIGN RELATED TO CONCRETE INCLUDING STRENGTH, ANCHOR BOLT EMBEDMENT DEPTH, AND EPOXY SELECTION BY OTHERS.
4. STRUCTURAL DESIGN BY AWC WILL BE AUTHENTICATED BY A 3RD PARTY STRUCTURAL ENGINEER REGISTERED IN THE STATE OF ALASKA, USA. ISSUED FOR CONSTRUCTION (IFC) ONLY.
5. ALL TANK, SKID, PLATFORM & STAIR WELDING TO CONFORM TO CSA W47.1 (STEEL, OR CSA W47.2 (ALUMINUM).
6. ALL WELDED PIPE SPOOLS TO CONFORM TO ASME B31.3.
7. ALL AWC ALUMINUM TANKS ARE NSF61 COMPLIANT WHEN THE WATER IS WITHIN A PH RANGE OF 6-9.
8. ALL WETTED FASTENERS INSIDE TANK TO BE ISOLATED FROM DISSIMILAR METAL CONTACT.

FINISH

1. ALL WELDS TO BE CLEANED USING A STAINLESS STEEL WIRE BRUSH.
2. ALL WELDED SS WATER SERVICE PIPING TO BE PICKLED & PASSIVATED AS PER ASTM A967-A967M-17 AND ASTM A380 / A380M-17 USING AVESTA RED ONE 240.

TESTING

1. ALL WELDS TO BE VISUALLY INSPECTED FOR DEFECTS.
2. ALL PIPING TO BE HYDROTESTED TO ASME B31.3 STANDARDS.

ELECTRICAL

1. MINIMUM 3 FT OF CLEARANCE REQUIRED IN FRONT OF ANY ELECTRICAL PANEL / JUNCTION BOX.

INSTALLATION

1. ISOLATION MEMBRANE IS REQUIRED BETWEEN THE CONCRETE FLOOR AND THE BOTTOM OF THE TANK(S) BASEPLATE. MEMBRANE TO BE SUPPLIED AND INSTALLED BY OTHERS. THE RECOMMENDED LAYOUT DIMENSIONS CAN BE FOUND ON 17805-PI-LAY-00.1
2. SEISMIC ANCHOR BOLTS TO BE SUPPLIED AND INSTALLED BY OTHERS.
3. ANY INTERCONNECTING PIPING BETWEEN AWC'S EQUIPMENT AND THE WTP TO BE DESIGNED, SUPPLIED & INSTALLED BY OTHERS.
4. TANK NOZZLES SHALL NOT BE SUBJECTED TO EXTERNAL PIPING FORCES AND MOMENTS. ZERO LOADING WILL BE ACCEPTED.

SHIPPED LOOSE ITEMS

1. SEE NOTES ON PROJECT PIPING AND INSTRUMENT DIAGRAM (17805-PR-PID-001) FOR VALVE STEM EXTENSIONS OR CHAIN WHEEL ACTUATORS, IF APPLICABLE. IF NO NOTE IS PROVIDED ON THE P&ID, THE VALVE WILL BE SHIPPED WITH A SUPPLIER STANDARD ACTUATOR OR HANDLE
2. SHIPPED LOOSE ITEMS:
   - FLOCCULATOR MIXER BLADES
   - FLOCCULATOR MOUNTING FRAME C/W DRIVE MOTORS
   - SKIMMER BLADES & BOLT-ON SPLASH GUARDS
   - MOTORIZED VALVES

ESTIMATED WEIGHTS (W/ EQUIPMENT)

1. TANK (EACH TRAIN)

DRY WEIGHT (TANK ONLY)	10,000 LBS
DRY WEIGHT (AS SHIPPED, PARTIALLY ASSEMBLED)	12,000 LBS
DRY WEIGHT (FULLY ASSEMBLED)	13,000 LBS
OPERATING WEIGHT (WITH WATER)	265,000 LBS

LEGEND

- BY AWC
- BY OTHERS
- FUTURE
- 10 / HV-01 — ITEM NUMBER / P&ID TAG NUMBER
- TP-01 — P&ID TIE POINT NUMBER

PARTS LIST

ITEM	QTY	DESCRIPTION	SIZE (in)	MATERIAL	MANUFACTURER	MODEL #
1	1	BALL VALVE, FNPT	3/4"	316 SS	MA STEWART	G2E
2	5	BALL VALVE, FNPT	2"	316 SS	MA STEWART	G2E
3	1	BUTTERFLY VALVE, C/W LEVER	2 1/2"	D.I.	DEZURIK	BOS-US
4	1	BUTTERFLY VALVE, C/W HANDWHEEL	3"	C.I.	DeZURIK	BAW AWWA C-504, F1-NBRA-GS-6B-HD8
5	1	BUTTERFLY VALVE, C/W HANDWHEEL	4"	C.I.	DeZURIK	BAW AWWA C-504, F1-NBRA-GS-6B-HD8
6	1	BUTTERFLY VALVE, ON/OFF	10"	C.I.	DeZURIK	BAW AWWA, F1, NBRN-NBR / IQT1000
7	1	BUTTERFLY VALVE, C/W HANDWHEEL	10"	C.I.	DeZURIK	BAW AWWA C-504, F1-NBRA-GS-6B-HD8
8	1	HYTROL VALVE	3/4"	BRONZE	CLA-VAL	100-01
9	1	FLOCCULATION MIXER, STAGE 1	43" DIA	316 SS	AFX	AMX-37
10	1	FLOCCULATION MIXER, STAGE 2	43" DIA	316 SS	AFX	AMX-16
11	1	SKIMMER DRIVE MOTOR	0.25 HP	N/A	SEW EURODRIVE	KAF47 R37
12	4	ANODE ASSEMBLY		MAGNESIUM / AL-6061-T6	AWC	CUSTOM
13	1	LEVEL TRANSMITTER	2"		VEGA	VEGAPLUS C11
14	3	DISCONNECT SWITCH			ABB	EOT32U3P4-P
15	3	CONTROL STATION			ABB	MEP2-0
16	1	MAIN CONTROL PANEL	72" x 72" x 12"	STEEL	TBD	TBD

TIE-POINT SCHEDULE

ITEM	DESCRIPTION	SIZE (in)	TYPE
02-TP-100	INFLUENT	10"	FLANGE, FF, 150#
02-TP-110	RECYCLE RETURN (LOW FLOW)	2 1/2"	FLANGE, FF, 150#
02-TP-111	RECYCLE RETURN (HIGH FLOW)	3"	FLANGE, FF, 150#
02-TP-113	SCUM TROUGH SPRAY BAR SUPPLY	3/4"	FLANGE, FF, 150#
02-TP-115	SCUM TROUGH FLOAT DRAIN	4"	FLANGE, FF, 150#
02-TP-116	EFFLUENT	10"	FLANGE, FF, 150#
02-TP-117	OVERFLOW	10"	FLANGE, FF, 150#
02-TP-119	RECYCLE SUPPLY	4"	FLANGE, FF, 150#

SHEET INDEX:

1: GENERAL NOTES & PART LISTS
2: ISO VIEW
3: PLAN VIEW
4: ELEVATION - NORTH
5: ELEVATION - SOUTH
6: ELEVATION - EAST & WEST
7: SECTION - INTERNALS
8: BREAK TANK & CURVED BEACH
9: DETAIL - LCP PANEL
10: DAF 1 & 3 - SHIPPING ENVELOPE
11: DAF 2 - SHIPPING ENVELOPE
12: ANCHORING

DAF TANK
QTY: 3 REQUIRED

NOTES:

ENGINEER'S SEAL

PRELIMINARY
NOT FOR CONSTRUCTION

THE INFORMATION ON THIS DRAWING IS INTENDED FOR CONCEPTUAL DEVELOPMENT, PRELIMINARY DESIGN, OR FOR GUIDANCE ONLY. THIS DOCUMENT SHOULD NOT BE CONSIDERED A FINALIZED PROFESSIONAL WORK PRODUCT.

REV	DESCRIPTION	DATE	BY	CHK	APP
A	ISSUED FOR REVIEW	21-FEB-23	SBW	JJE	JEE

REVISIONS

9087A 198 Street Langley, BC Canada V1M 3B1
Phone : 604-638-0760 Fax: 604-638-0795
www.awcsolutions.ca

THIS DRAWING IS THE PROPERTY OF AWC AND CONTAINS PROPRIETARY AND CONFIDENTIAL INFORMATION WHICH MUST NOT BE DUPLICATED, USED OR DISCLOSED OTHER THAN EXPRESSLY AUTHORIZED BY AWC.

CLIENT: CITY & BOROUGH OF WRANGELL
PROJECT: WRANGELL WTP
TITLE: DAF LAYOUT GENERAL ARRANGEMENT DRAWING
SCALE: NTS | PROJECTION | DEFAULT UNITS: in | SHEET SIZE: 17 x 11 | SHEET: 1 OF 12
DRAWING NO.: **17805-PI-GAD-200** | REV: **A**

FILE: M:\Shared\Customers\CRW Engineering\17805 Wrangell AK\5 Engineering\5.13 Piping\5.13.H Diagrams & Dwgs (2D)\5.13.H.1 GAs & Elev Dwgs

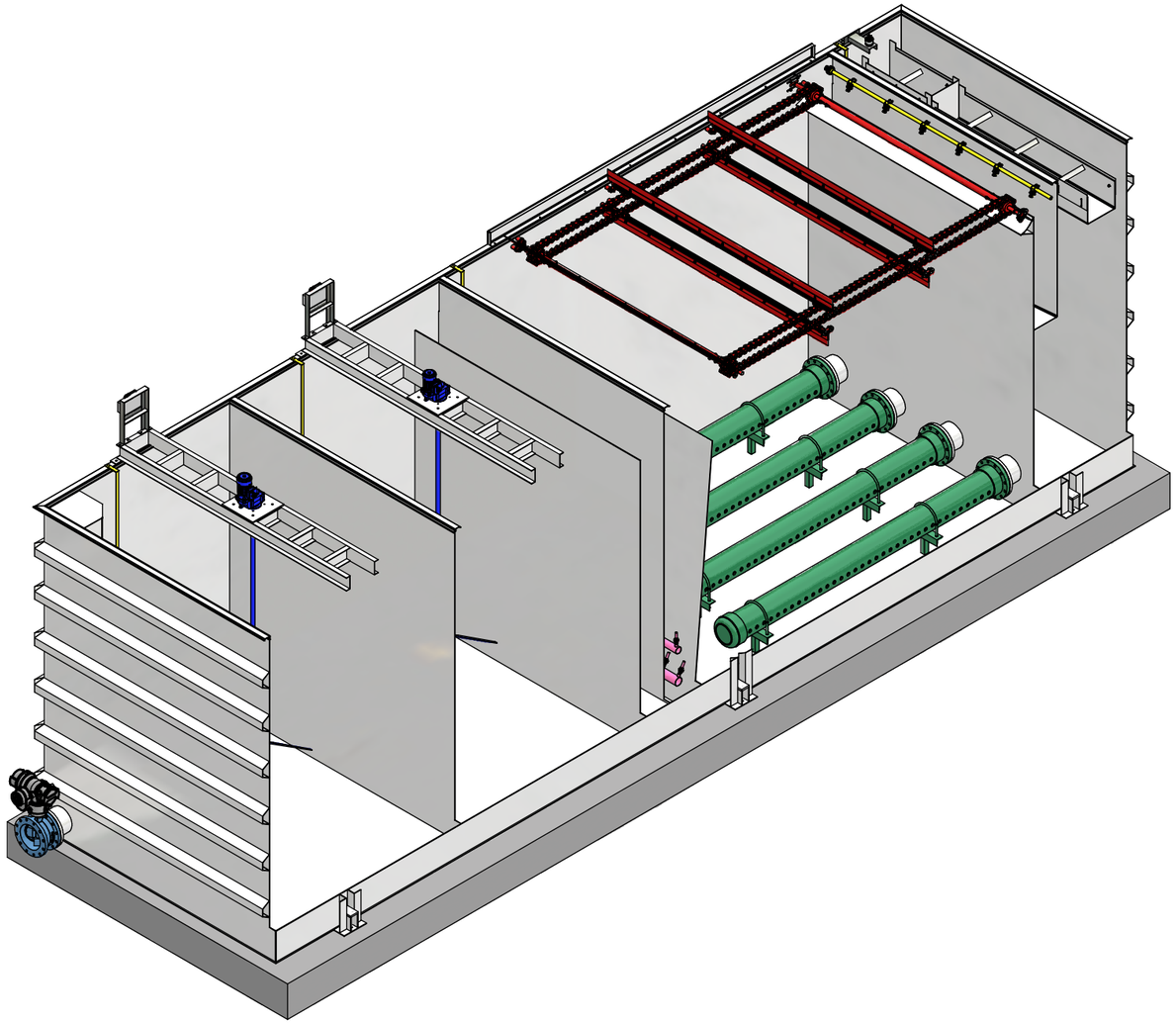

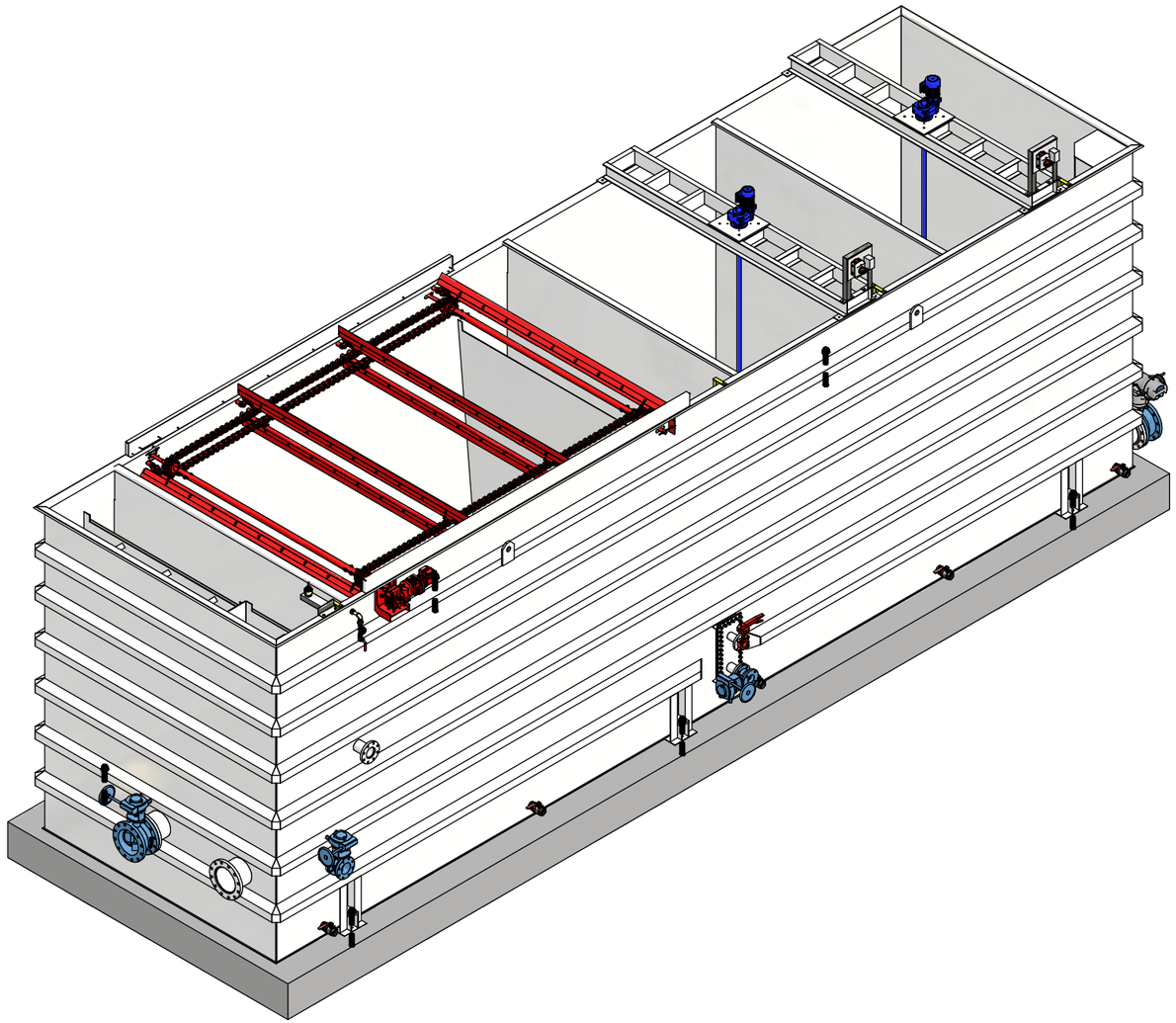

TIE-POINT SCHEDULE				
ITEM	DESCRIPTION	SIZE (in)	TYPE	LOCATION
02-TP-100	INFLUENT	10"	FLANGE, FF, 150#	TRAIN 1
02-TP-110	RECYCLE RETURN (LOW FLOW)	2 1/2"	FLANGE, FF, 150#	TRAIN 1
02-TP-111	RECYCLE RETURN (HIGH FLOW)	3"	FLANGE, FF, 150#	TRAIN 1
02-TP-113	SCUM TROUGH SPRAY BAR SUPPLY	3/4"	FLANGE, FF, 150#	TRAIN 1
02-TP-115	SCUM TROUGH FLOAT DRAIN	4"	FLANGE, FF, 150#	TRAIN 1
02-TP-116	EFFLUENT	10"	FLANGE, FF, 150#	TRAIN 1
02-TP-117	OVERFLOW	10"	FLANGE, FF, 150#	TRAIN 1
02-TP-119	RECYCLE SUPPLY	4"	FLANGE, FF, 150#	TRAIN 1

NOTES:

ENGINEER'S SEAL

PRELIMINARY
NOT FOR CONSTRUCTION

THE INFORMATION ON THIS DRAWING IS INTENDED FOR CONCEPTUAL DEVELOPMENT, PRELIMINARY DESIGN, OR FOR GUIDANCE ONLY. THIS DOCUMENT SHOULD NOT BE CONSIDERED A FINALIZED PROFESSIONAL WORK PRODUCT.

REV	DESCRIPTION	DATE	BY	CHK	APP
A	ISSUED FOR REVIEW	21-FEB-23	SBW	JE	TEG

REVISIONS

9087A 198 Street Langley, BC Canada V1M 3B1
Phone : 604-638-0760 Fax: 604-638-0795
www.awcsolutions.ca

THIS DRAWING IS THE PROPERTY OF AWC AND CONTAINS PROPRIETARY AND CONFIDENTIAL INFORMATION WHICH MUST NOT BE DUPLICATED, USED OR DISCLOSED OTHER THAN EXPRESSLY AUTHORIZED BY AWC.

CLIENT: CITY & BOROUGH OF WRANGELL

PROJECT: WRANGELL WTP

TITLE: DAF LAYOUT GENERAL ARRANGEMENT DRAWING

SCALE	PROJECTION	DEFAULT UNITS	SHEET SIZE	SHEET
NTS		in	17 x 11	2 OF 12

DRAWING NO.: **17805-PI-GAD-200** REV: **A**

FILE: M:\Shared\Customers\CRW Engineering\17805 Wrangell AK\5 Engineering\5.13 Piping\5.13.H Diagrams & Dwgs (2D)\5.13.H.1 GAs & Elev Dwgs

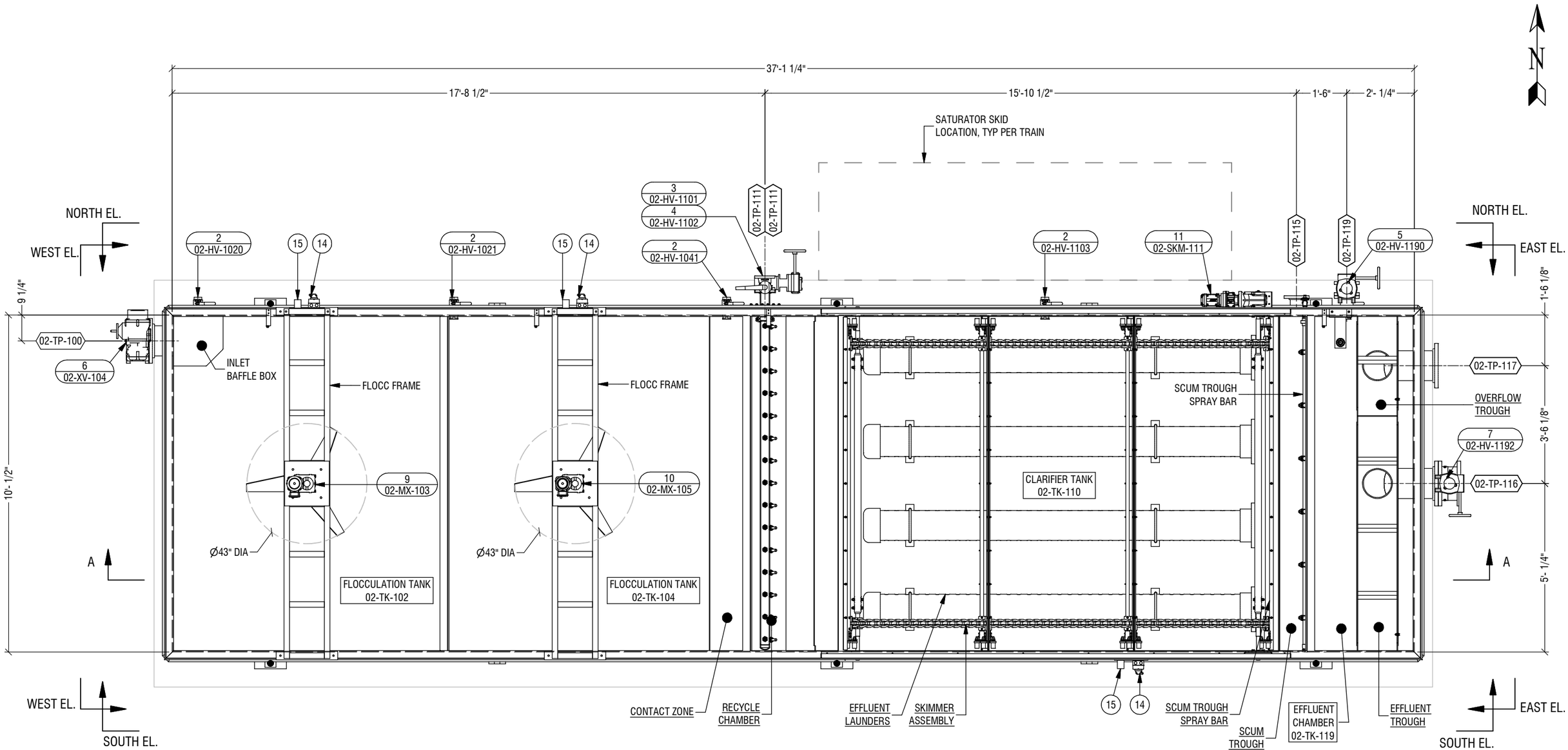

PLAN VIEW
DAF TRAINS
(TYP ALL 3 TRAINS)

NOTES:

ENGINEER'S SEAL

PRELIMINARY
NOT FOR CONSTRUCTION

THE INFORMATION ON THIS DRAWING IS INTENDED FOR CONCEPTUAL DEVELOPMENT, PRELIMINARY DESIGN, OR FOR GUIDANCE ONLY. THIS DOCUMENT SHOULD NOT BE CONSIDERED A FINALIZED PROFESSIONAL WORK PRODUCT.

REV	DESCRIPTION	DATE	BY	CHK	APP
A	ISSUED FOR REVIEW	21-FEB-23	~~SBW~~	JE	~~JEE~~

REVISIONS

9087A 198 Street Langley, BC Canada V1M 3B1
Phone : 604-638-0760 Fax: 604-638-0795
www.awcsolutions.ca

THIS DRAWING IS THE PROPERTY OF AWC AND CONTAINS PROPRIETARY AND CONFIDENTIAL INFORMATION WHICH MUST NOT BE DUPLICATED, USED OR DISCLOSED OTHER THAN EXPRESSLY AUTHORIZED BY AWC.

CLIENT: CITY & BOROUGH OF WRANGELL
PROJECT: WRANGELL WTP
TITLE: DAF LAYOUT GENERAL ARRANGEMENT DRAWING

SCALE	PROJECTION	DEFAULT UNITS	SHEET SIZE	SHEET
NTS		in	17 x 11	3 OF 12

DRAWING NO. **17805-PI-GAD-200** REV **A**

FILE: M:\Shared\Customers\CRW Engineering\17805 Wrangell AK\5 Engineering\5.13 Piping\5.13.H Diagrams & Dwgs (2D)\5.13.H.1 GAs & Elev Dwgs

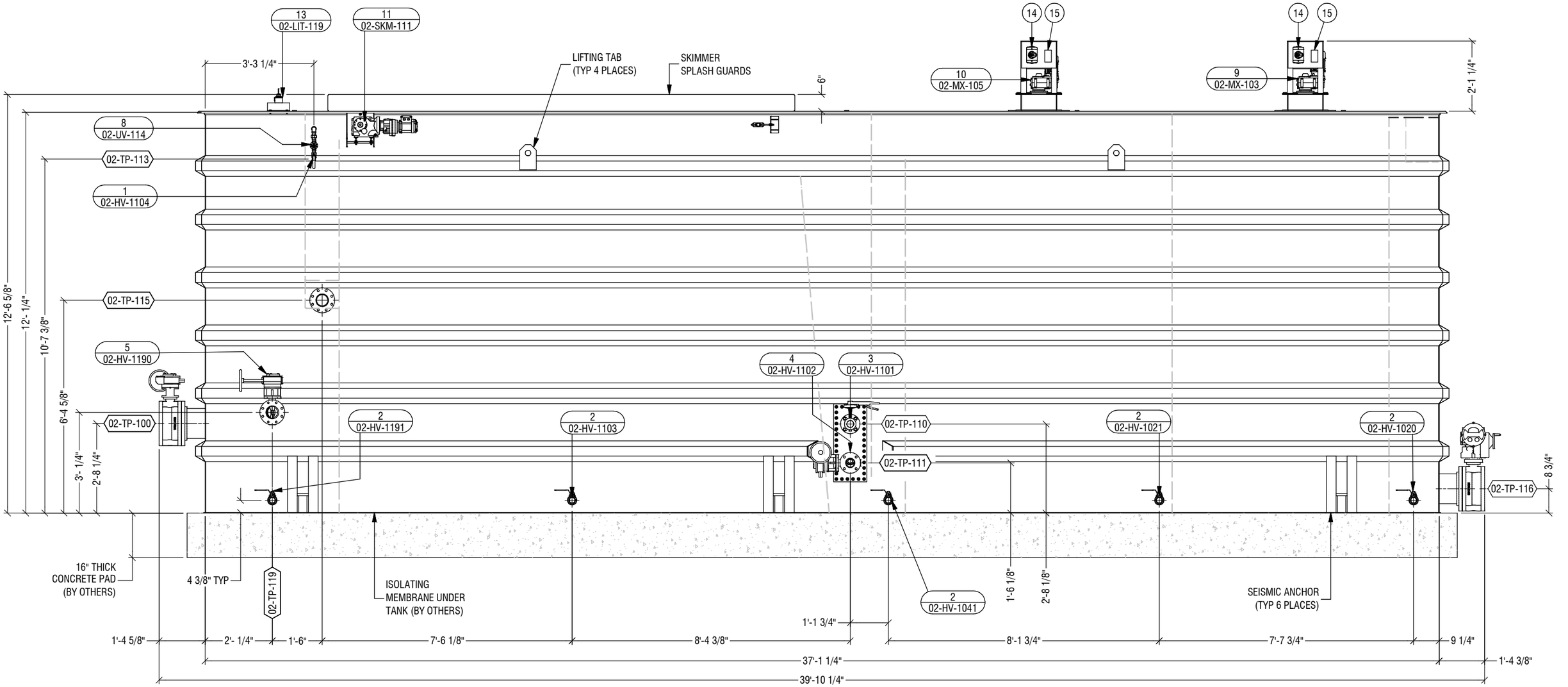

NORTH ELEVATION

NOTES:

ENGINEER'S SEAL

PRELIMINARY
NOT FOR CONSTRUCTION

THE INFORMATION ON THIS DRAWING IS INTENDED FOR CONCEPTUAL DEVELOPMENT, PRELIMINARY DESIGN, OR FOR GUIDANCE ONLY. THIS DOCUMENT SHOULD NOT BE CONSIDERED A FINALIZED PROFESSIONAL WORK PRODUCT.

REV	DESCRIPTION	DATE	BY	CHK	APP
A	ISSUED FOR REVIEW	21-FEB-23	~~SBW~~	JE	~~JEG~~

REVISIONS

9087A 198 Street Langley, BC Canada V1M 3B1
Phone : 604-638-0760 Fax: 604-638-0795
www.awcsolutions.ca

THIS DRAWING IS THE PROPERTY OF AWC AND CONTAINS PROPRIETARY AND CONFIDENTIAL INFORMATION WHICH MUST NOT BE DUPLICATED, USED OR DISCLOSED OTHER THAN EXPRESSLY AUTHORIZED BY AWC.

CLIENT: CITY & BOROUGH OF WRANGELL

PROJECT: WRANGELL WTP

TITLE: DAF LAYOUT GENERAL ARRANGEMENT DRAWING

SCALE	PROJECTION	DEFAULT UNITS	SHEET SIZE	SHEET
NTS		in	17 x 11	4 OF 12

DRAWING NO. **17805-PI-GAD-200** REV **A**

FILE: M:\Shared\Customers\CRW Engineering\17805 Wrangell AK\5 Engineering\5.13 Piping\5.13.H Diagrams & Dwgs (2D)\5.13.H.1 GAs & Elev Dwgs

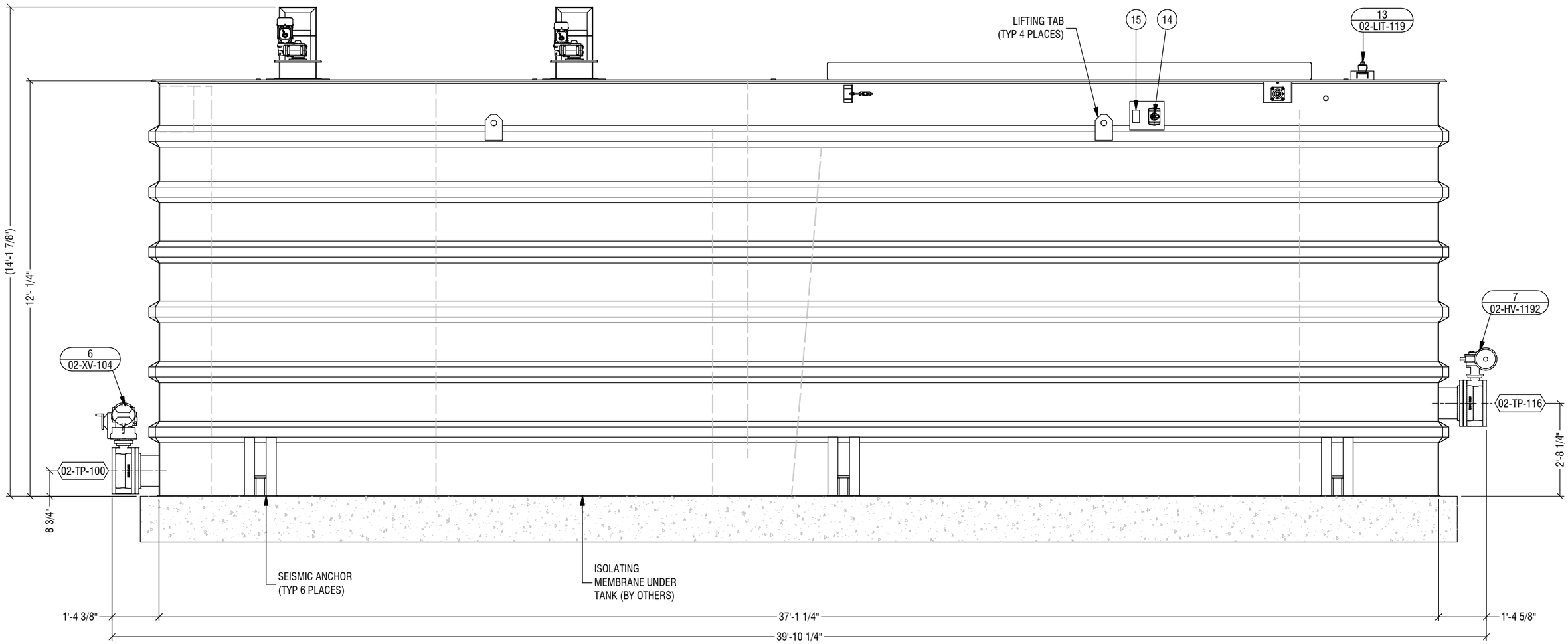

SOUTH ELEVATION

NOTES:

ENGINEER'S SEAL

PRELIMINARY
NOT FOR CONSTRUCTION

THE INFORMATION ON THIS DRAWING IS INTENDED FOR CONCEPTUAL DEVELOPMENT, PRELIMINARY DESIGN, OR FOR GUIDANCE ONLY. THIS DOCUMENT SHOULD NOT BE CONSIDERED A FINALIZED PROFESSIONAL WORK PRODUCT.

REV	DESCRIPTION	DATE	BY	CHK	APP
A	ISSUED FOR REVIEW	21-FEB-23	SBW	JE	JBE

REVISIONS

9087A 198 Street Langley, BC Canada V1M 3B1
Phone : 604-638-0760 Fax: 604-638-0795
www.awcsolutions.ca

THIS DRAWING IS THE PROPERTY OF AWC AND CONTAINS PROPRIETARY AND CONFIDENTIAL INFORMATION WHICH MUST NOT BE DUPLICATED, USED OR DISCLOSED OTHER THAN EXPRESSLY AUTHORIZED BY AWC.

CLIENT: CITY & BOROUGH OF WRANGELL

PROJECT: WRANGELL WTP

TITLE: DAF LAYOUT GENERAL ARRANGEMENT DRAWING

SCALE	PROJECTION	DEFAULT UNITS	SHEET SIZE	SHEET
NTS		in	17 x 11	5 OF 12

DRAWING NO. **17805-PI-GAD-200** REV **A**

FILE: M:\Shared\Customers\CRW Engineering\17805 Wrangell AK\5 Engineering\5.13 Piping\5.13.H Diagrams & Dwgs (2D)\5.13.H.1 GAs & Elev Dwgs

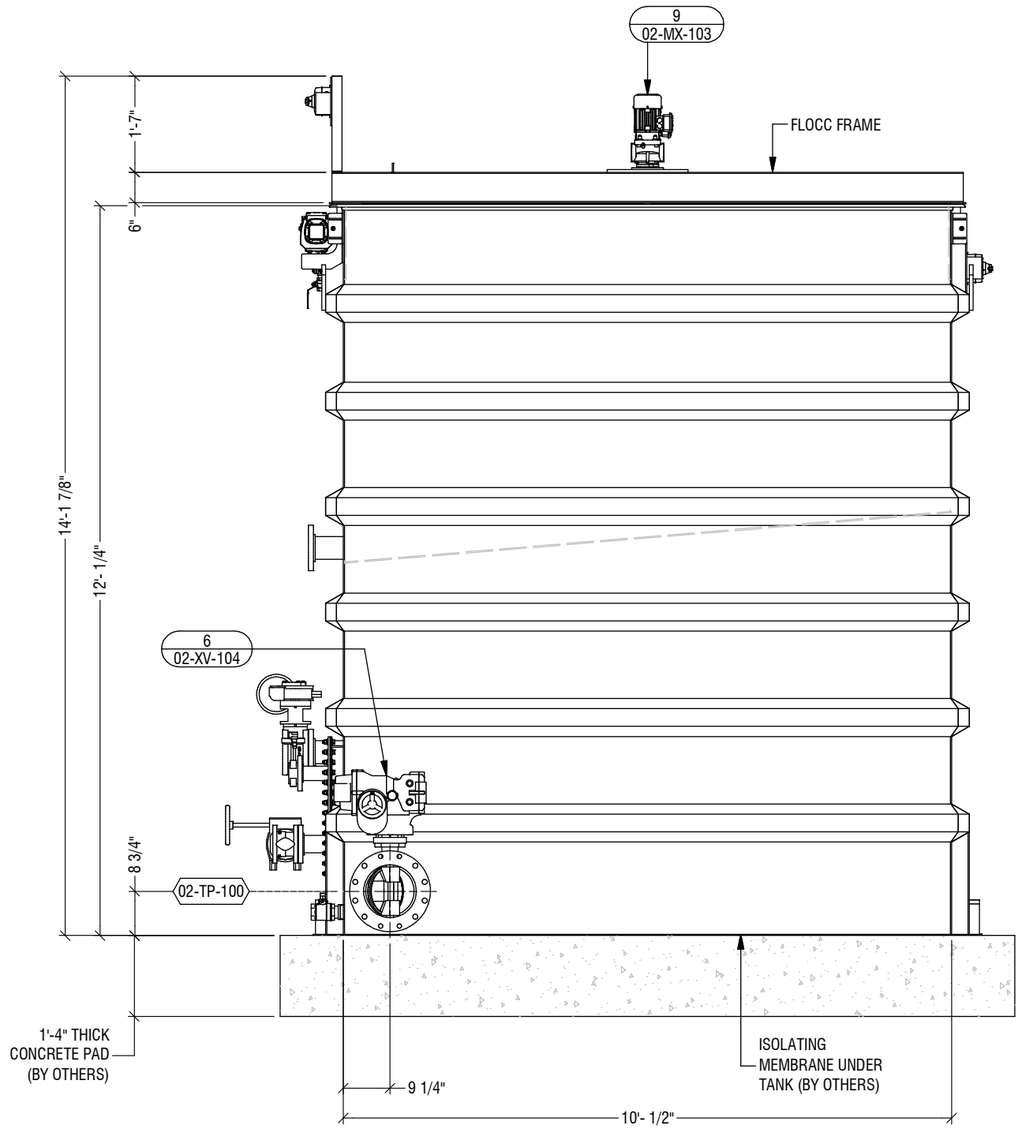

WEST ELEVATION

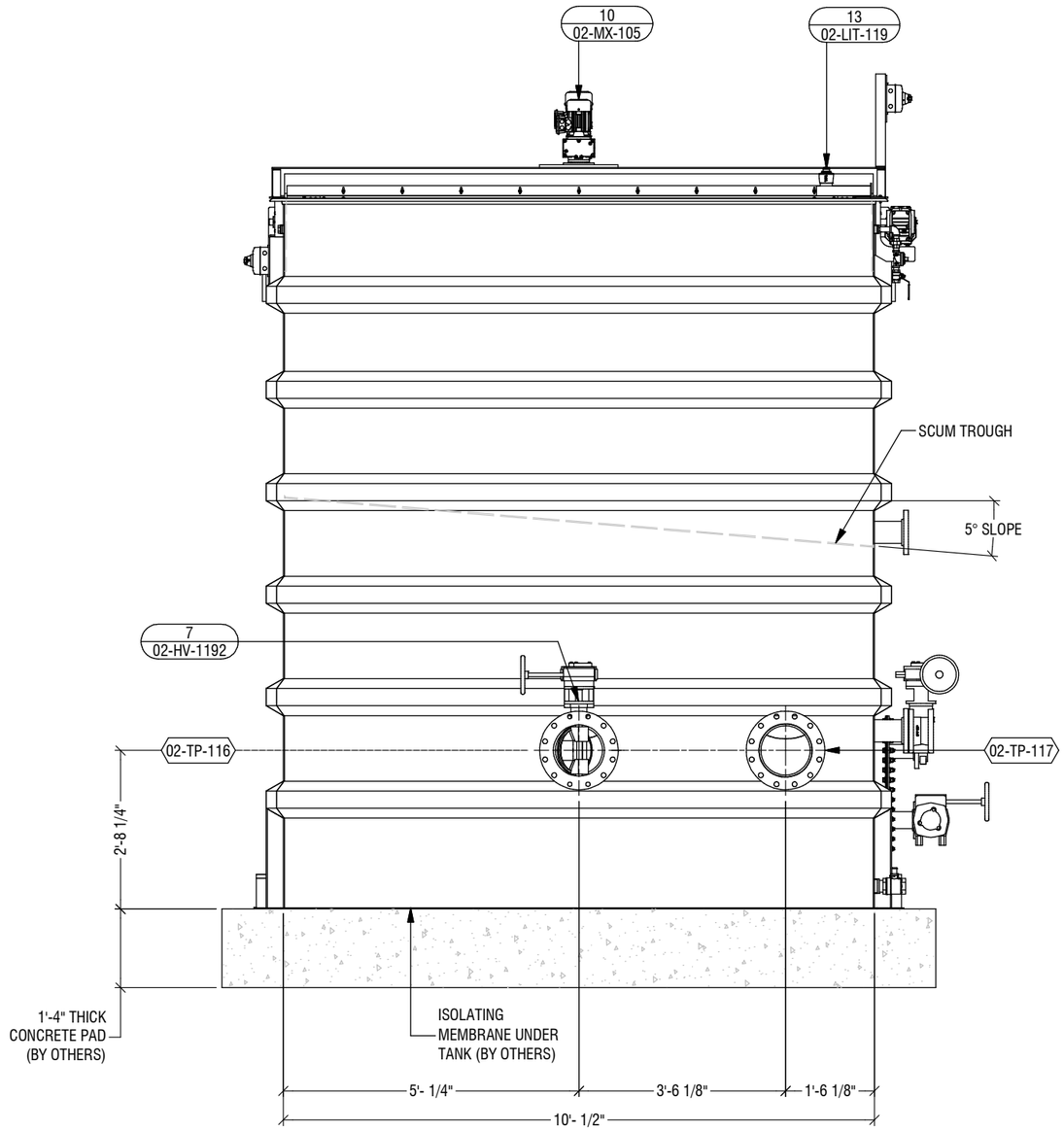

EAST ELEVATION

NOTES:

ENGINEER'S SEAL

PRELIMINARY
NOT FOR CONSTRUCTION

THE INFORMATION ON THIS DRAWING IS INTENDED FOR CONCEPTUAL DEVELOPMENT, PRELIMINARY DESIGN, OR FOR GUIDANCE ONLY. THIS DOCUMENT SHOULD NOT BE CONSIDERED A FINALIZED PROFESSIONAL WORK PRODUCT.

REV	DESCRIPTION	DATE	BY	CHK	APP
A	ISSUED FOR REVIEW	21-FEB-23	SBW	JE	TEC

REVISIONS

9087A 198 Street Langley, BC Canada V1M 3B1
Phone : 604-638-0760 Fax: 604-638-0795
www.awcsolutions.ca

THIS DRAWING IS THE PROPERTY OF AWC AND CONTAINS PROPRIETARY AND CONFIDENTIAL INFORMATION WHICH MUST NOT BE DUPLICATED, USED OR DISCLOSED OTHER THAN EXPRESSLY AUTHORIZED BY AWC.

CLIENT: CITY & BOROUGH OF WRANGELL

PROJECT: WRANGELL WTP

TITLE: DAF LAYOUT GENERAL ARRANGEMENT DRAWING

SCALE	PROJECTION	DEFAULT UNITS	SHEET SIZE	SHEET
NTS		in	17 x 11	6 OF 12

DRAWING NO. **17805-PI-GAD-200** REV **A**

FILE: M:\Shared\Customers\CRW Engineering\17805 Wrangell AK\5 Engineering\5.13 Piping\5.13.H Diagrams & Dwgs (2D)\5.13.H.1 GAs & Elev Dwgs

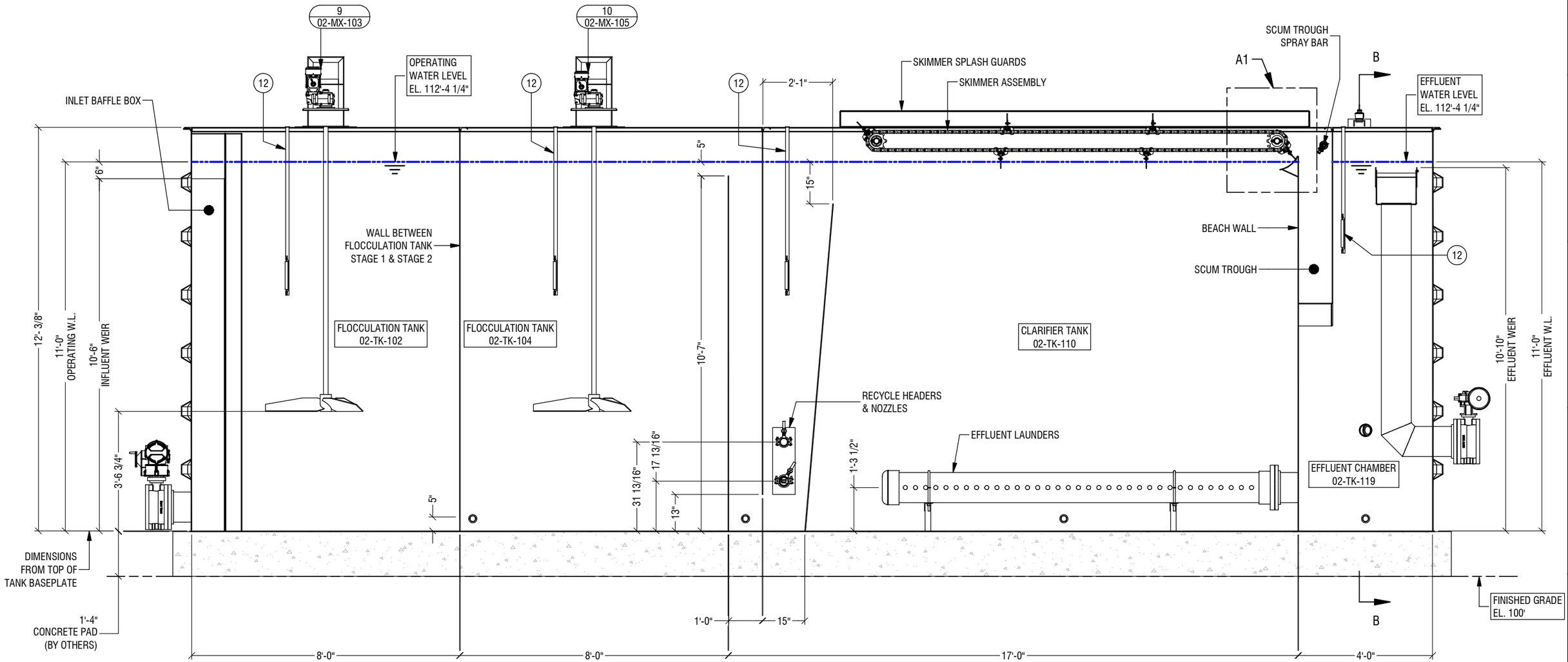

SECTION A-A
INTERNAL ELEVATION

NOTES:

ENGINEER'S SEAL

PRELIMINARY
NOT FOR CONSTRUCTION

THE INFORMATION ON THIS DRAWING IS INTENDED FOR CONCEPTUAL DEVELOPMENT, PRELIMINARY DESIGN, OR FOR GUIDANCE ONLY. THIS DOCUMENT SHOULD NOT BE CONSIDERED A FINALIZED PROFESSIONAL WORK PRODUCT.

REV	DESCRIPTION	DATE	BY	CHK	APP
A	ISSUED FOR REVIEW	21-FEB-23	SBW	JE	EG

REVISIONS

9087A 198 Street Langley, BC Canada V1M 3B1
Phone : 604-638-0760 Fax: 604-638-0795
www.awcsolutions.ca

THIS DRAWING IS THE PROPERTY OF AWC AND CONTAINS PROPRIETARY AND CONFIDENTIAL INFORMATION WHICH MUST NOT BE DUPLICATED, USED OR DISCLOSED OTHER THAN EXPRESSLY AUTHORIZED BY AWC.

CLIENT: CITY & BOROUGH OF WRANGELL
PROJECT: WRANGELL WTP
TITLE: DAF LAYOUT GENERAL ARRANGEMENT DRAWING

SCALE	PROJECTION	DEFAULT UNITS	SHEET SIZE	SHEET
NTS		in	17 x 11	7 OF 12

DRAWING NO. **17805-PI-GAD-200** REV **A**

FILE: M:\Shared\Customers\CRW Engineering\17805 Wrangell AK\5 Engineering\5.13 Piping\5.13.H Diagrams & Dwgs (2D)\5.13.H.1 GAs & Elev Dwgs

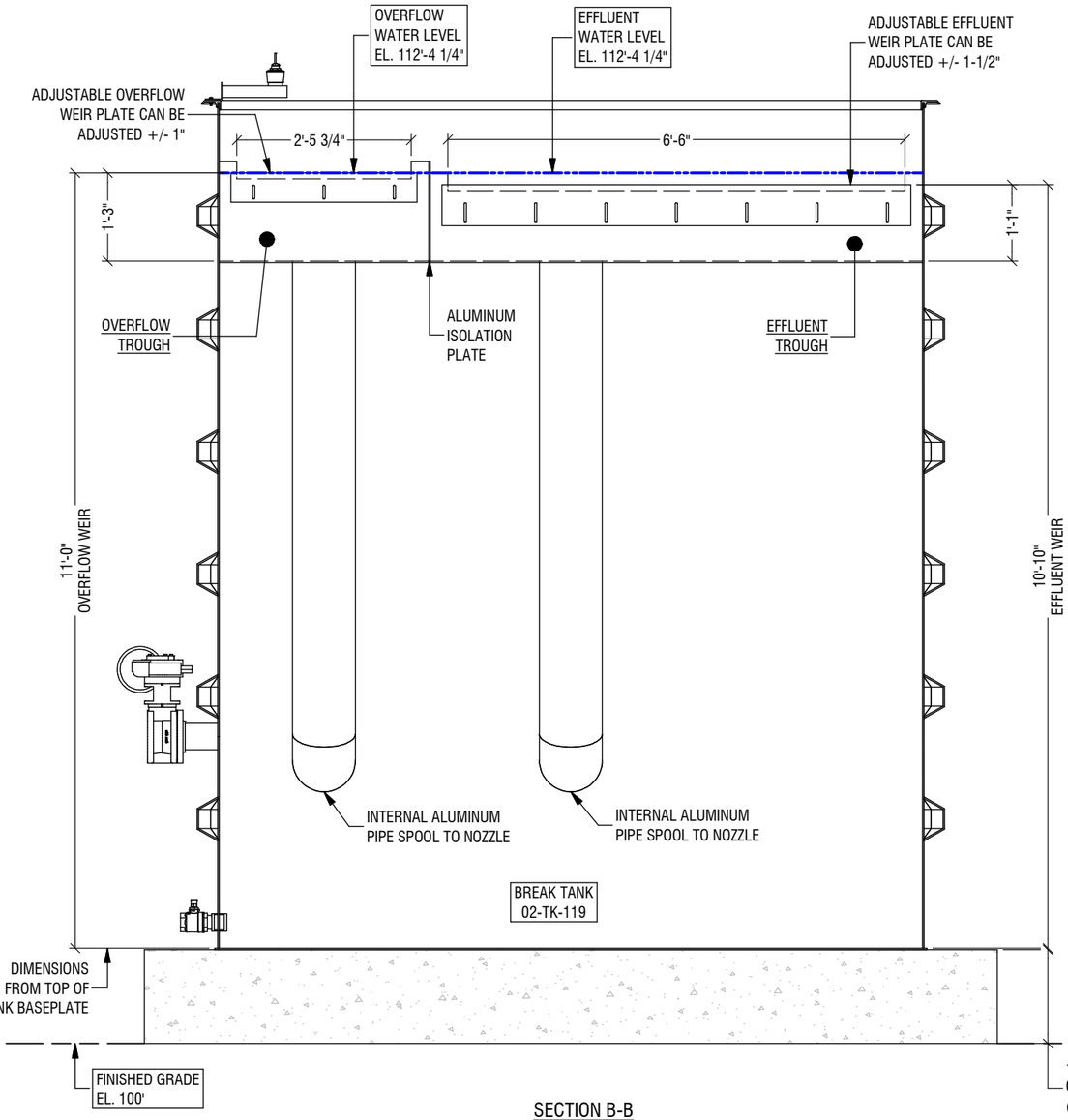

SECTION B-B
INTERNAL ELEVATION, BREAK TANK

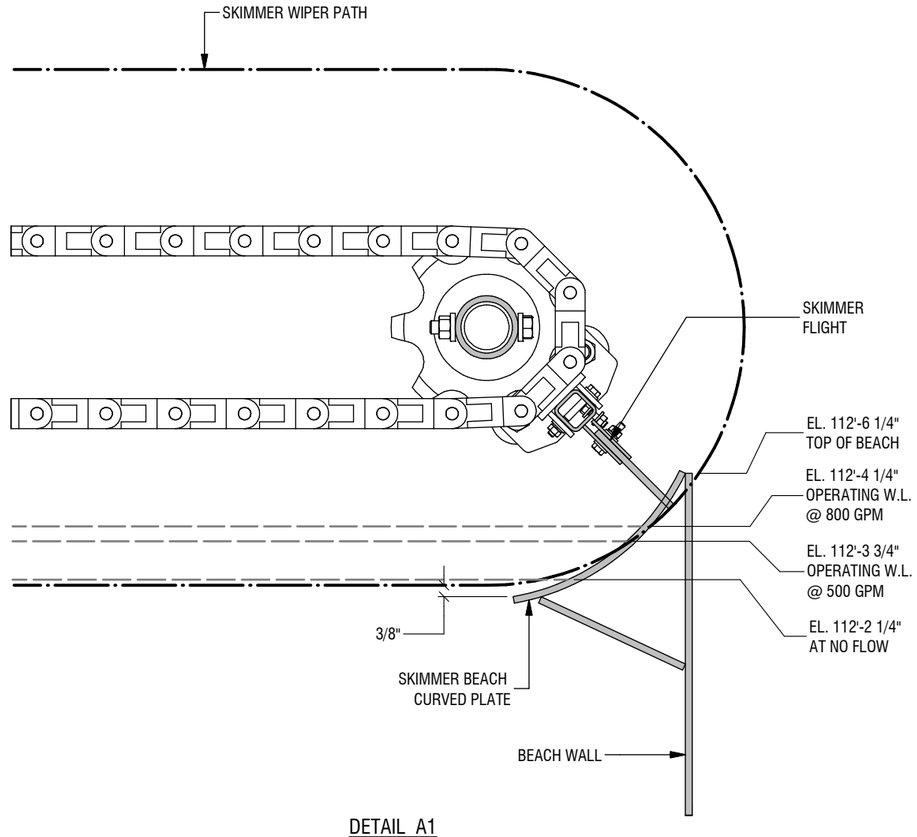

DETAIL A1
CURVED BEACH DETAIL

NOTES:

ENGINEER'S SEAL

PRELIMINARY
NOT FOR CONSTRUCTION

THE INFORMATION ON THIS DRAWING IS INTENDED FOR CONCEPTUAL DEVELOPMENT, PRELIMINARY DESIGN, OR FOR GUIDANCE ONLY. THIS DOCUMENT SHOULD NOT BE CONSIDERED A FINALIZED PROFESSIONAL WORK PRODUCT.

REV	DESCRIPTION	DATE	BY	CHK	APP
A	ISSUED FOR REVIEW	21-FEB-23	SBW	JE	

REVISIONS

AWC
9087A 198 Street Langley, BC Canada V1M 3B1
Phone : 604-638-0760 Fax: 604-638-0795
www.awcsolutions.ca

THIS DRAWING IS THE PROPERTY OF AWC AND CONTAINS PROPRIETARY AND CONFIDENTIAL INFORMATION WHICH MUST NOT BE DUPLICATED, USED OR DISCLOSED OTHER THAN EXPRESSLY AUTHORIZED BY AWC.

CLIENT	CITY & BOROUGH OF WRANGELL
PROJECT	WRANGELL WTP
TITLE	DAF LAYOUT GENERAL ARRANGEMENT DRAWING

SCALE	PROJECTION	DEFAULT UNITS	SHEET SIZE	SHEET
NTS		in	17 x 11	8 OF 12

DRAWING NO. **17805-PI-GAD-200** REV **A**

FILE: M:\Shared\Customers\CRW Engineering\17805 Wrangell AK\5 Engineering\5.13 Piping\5.13.H Diagrams & Dwgs (2D)\5.13.H.1 GAs & Elev Dwgs

DAF TRAIN #2 ONLY

LCP, LOWERED POSITION FOR SHIPPING
THEN RAISE INTO PLACE AT SITE

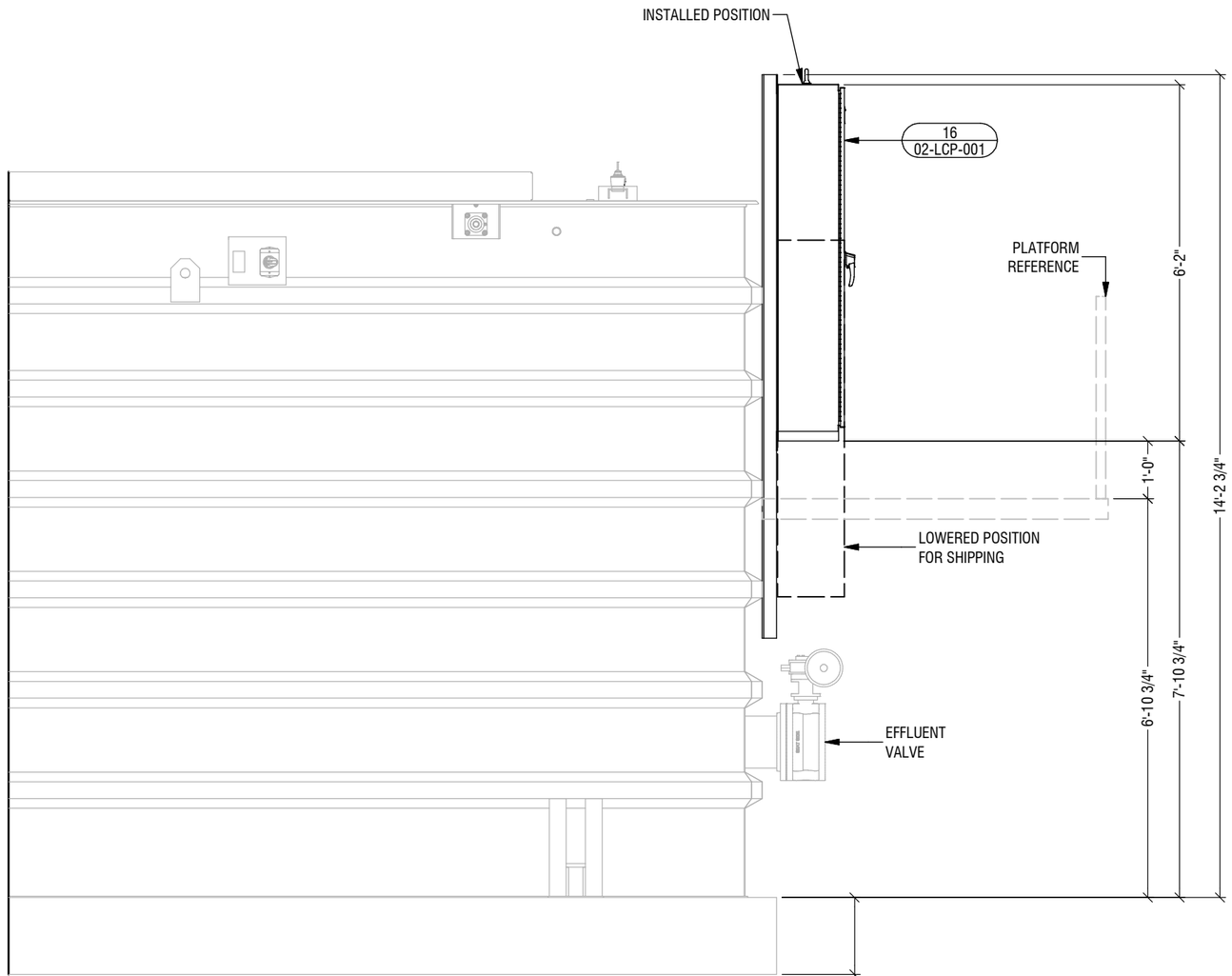

NORTH ELEVATION
(EFFLUENT END)

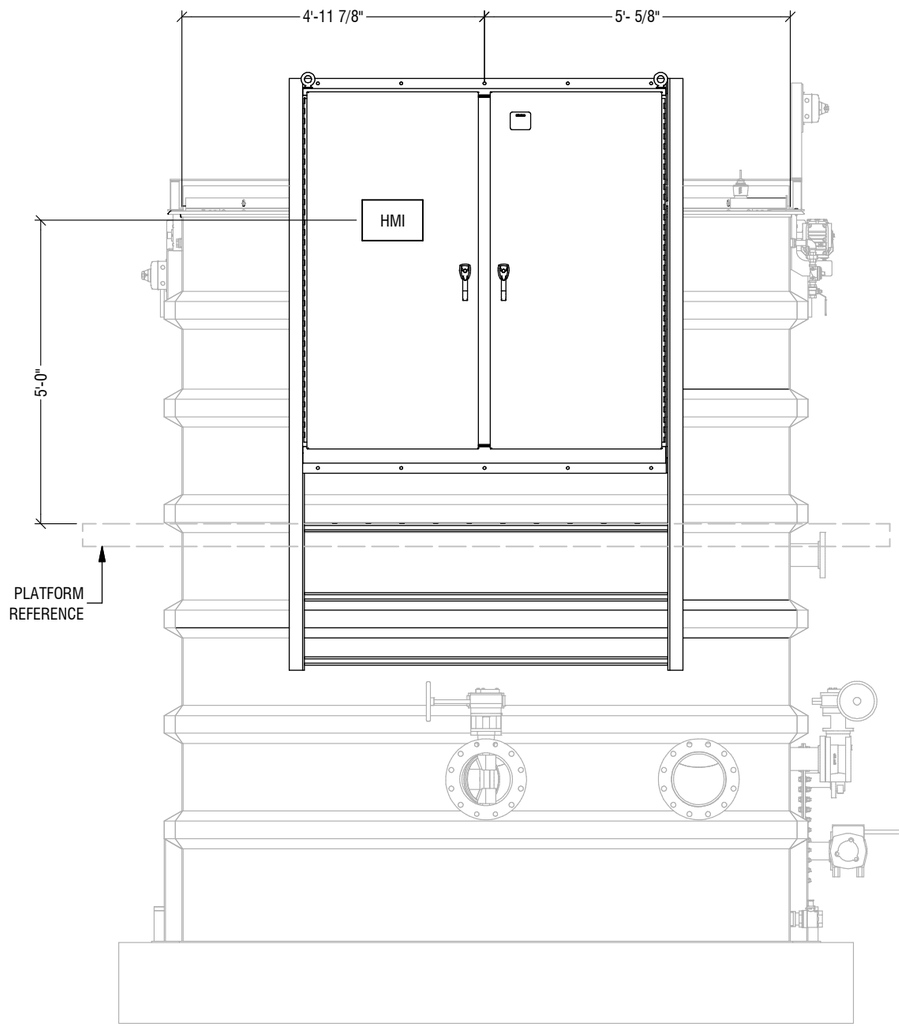

EAST ELEVATION

NOTES:

ENGINEER'S SEAL

PRELIMINARY
NOT FOR CONSTRUCTION

THE INFORMATION ON THIS DRAWING IS INTENDED FOR CONCEPTUAL DEVELOPMENT, PRELIMINARY DESIGN, OR FOR GUIDANCE ONLY. THIS DOCUMENT SHOULD NOT BE CONSIDERED A FINALIZED PROFESSIONAL WORK PRODUCT.

REV	DESCRIPTION	DATE	BY	CHK	APP
A	ISSUED FOR REVIEW	21-FEB-23	SBW	JE	TC

REVISIONS

AWC
9087A 198 Street Langley, BC Canada V1M 3B1
Phone : 604-638-0760 Fax: 604-638-0795
www.awcsolutions.ca

THIS DRAWING IS THE PROPERTY OF AWC AND CONTAINS PROPRIETARY AND CONFIDENTIAL INFORMATION WHICH MUST NOT BE DUPLICATED, USED OR DISCLOSED OTHER THAN EXPRESSLY AUTHORIZED BY AWC.

CLIENT: CITY & BOROUGH OF WRANGELL

PROJECT: WRANGELL WTP

TITLE: DAF LAYOUT GENERAL ARRANGEMENT DRAWING

SCALE	PROJECTION	DEFAULT UNITS	SHEET SIZE	SHEET
NTS		in	17 x 11	9 OF 12

DRAWING NO. **17805-PI-GAD-200** REV **A**

FILE: M:\Shared\Customers\CRW Engineering\17805 Wrangell AK\5 Engineering\5.13 Piping\5.13.H Diagrams & Dwgs (2D)\5.13.H.1 GAs & Elev Dwgs

DAF TRAIN #1 & #3

SHIPPING ENVELOPE

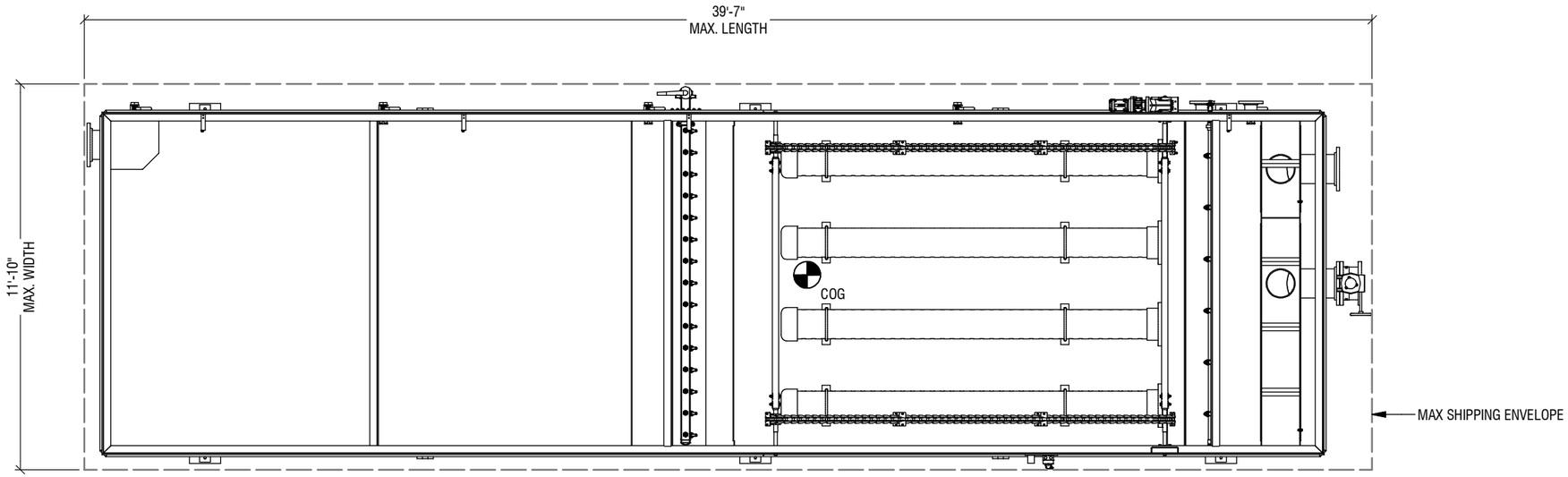

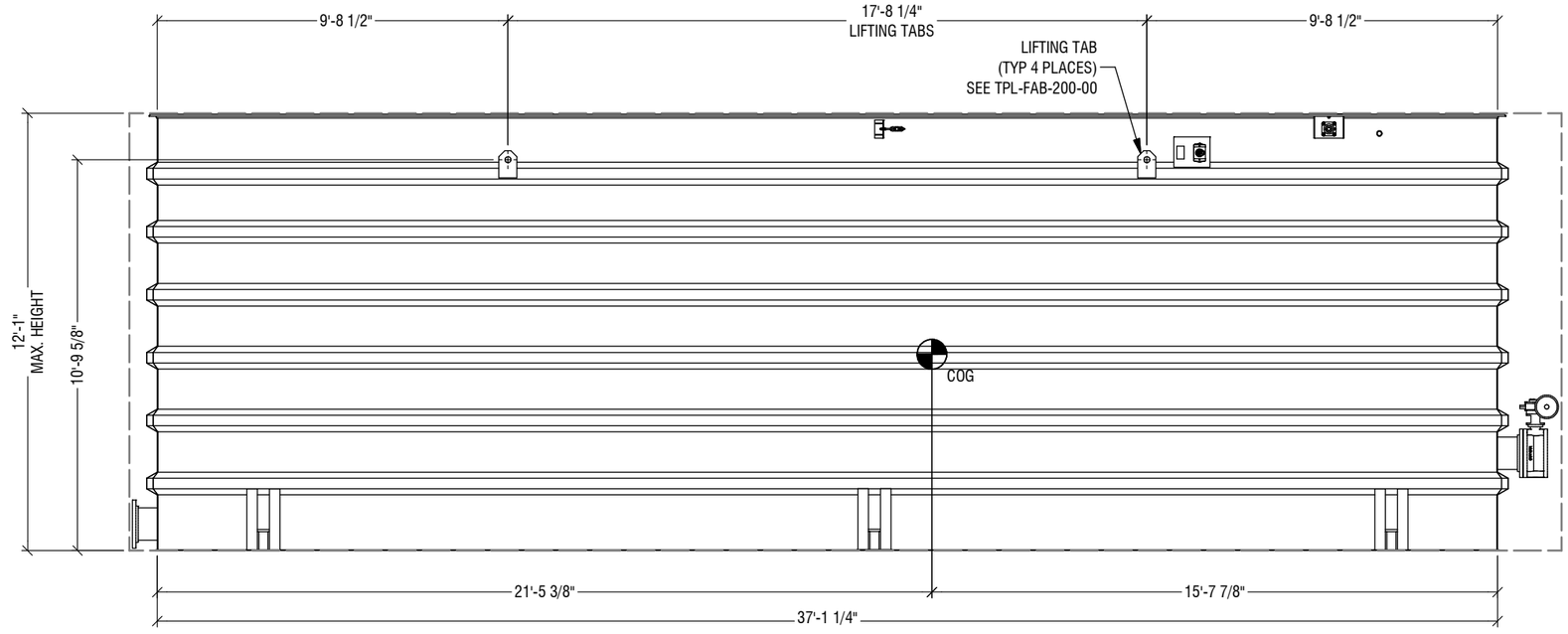

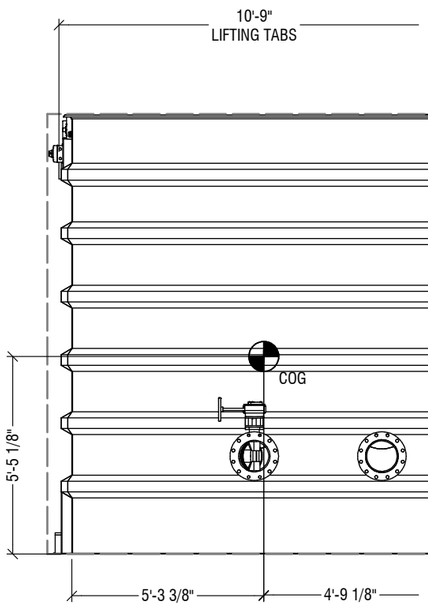

NOTES:

ENGINEER'S SEAL

PRELIMINARY
NOT FOR CONSTRUCTION

THE INFORMATION ON THIS DRAWING IS INTENDED FOR CONCEPTUAL DEVELOPMENT, PRELIMINARY DESIGN, OR FOR GUIDANCE ONLY. THIS DOCUMENT SHOULD NOT BE CONSIDERED A FINALIZED PROFESSIONAL WORK PRODUCT.

REV	DESCRIPTION	DATE	BY	CHK	APP
A	ISSUED FOR REVIEW	21-FEB-23	SBW	JE	JEC

REVISIONS

9087A 198 Street Langley, BC Canada V1M 3B1
Phone : 604-638-0760 Fax: 604-638-0795
www.awcsolutions.ca

THIS DRAWING IS THE PROPERTY OF AWC AND CONTAINS PROPRIETARY AND CONFIDENTIAL INFORMATION WHICH MUST NOT BE DUPLICATED, USED OR DISCLOSED OTHER THAN EXPRESSLY AUTHORIZED BY AWC.

CLIENT	CITY & BOROUGH OF WRANGELL
PROJECT	WRANGELL WTP
TITLE	DAF LAYOUT GENERAL ARRANGEMENT DRAWING
SCALE	NTS
PROJECTION	
DEFAULT UNITS	in
SHEET SIZE	17 x 11
SHEET	10 OF 12
DRAWING NO.	17805-PI-GAD-200
REV	A

FILE: M:\Shared\Customers\CRW Engineering\17805 Wrangell AK\5 Engineering\5.13 Piping\5.13.H Diagrams & Dwgs (2D)\5.13.H.1 GAs & Elev Dwgs

DAF TRAIN #2 ONLY
SHIPPING ENVELOPE

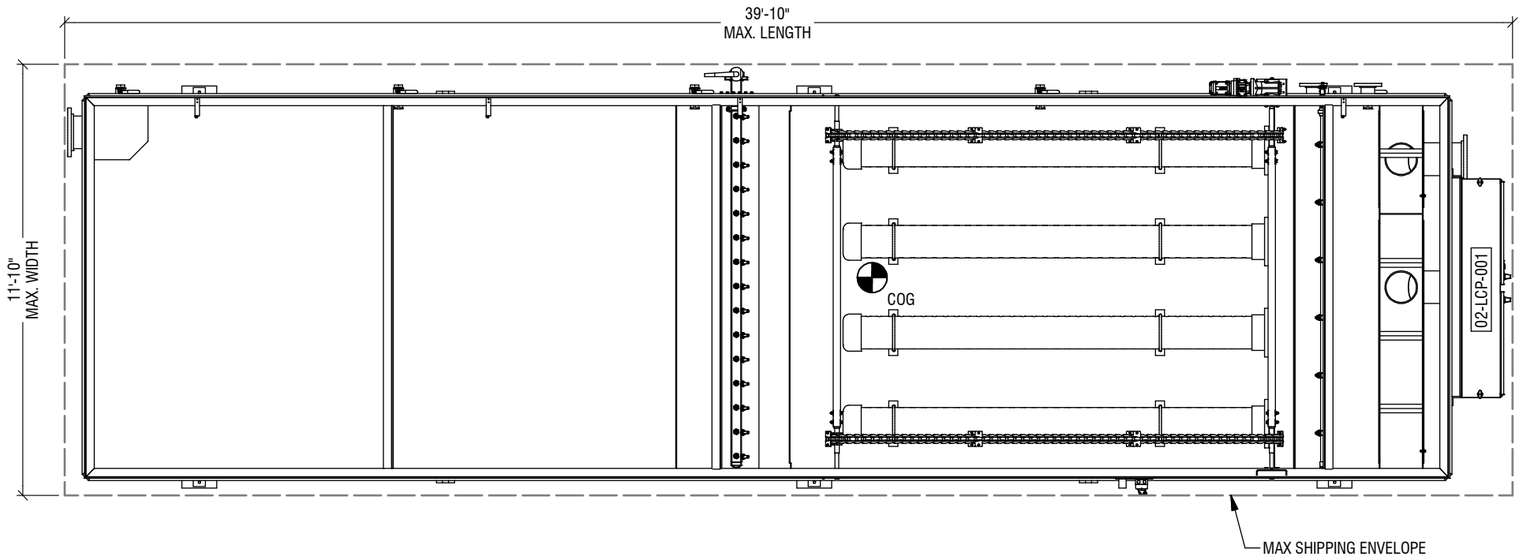

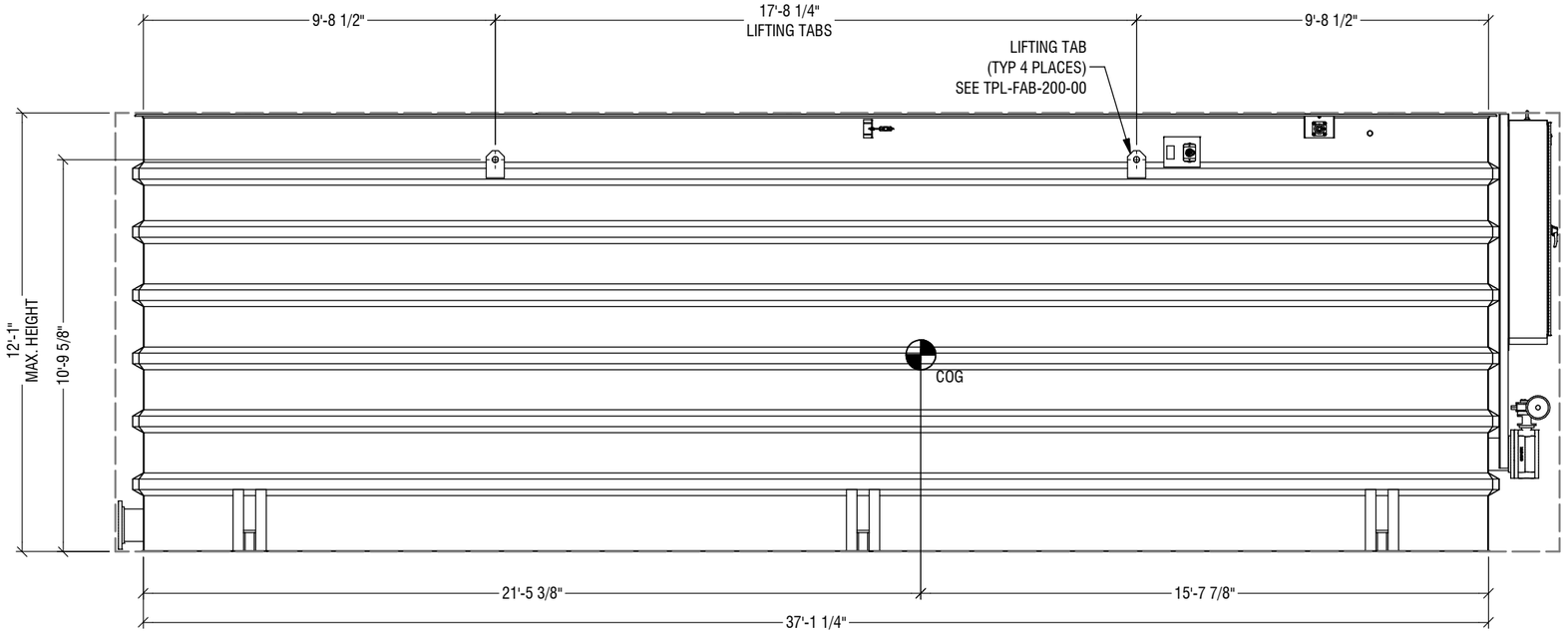

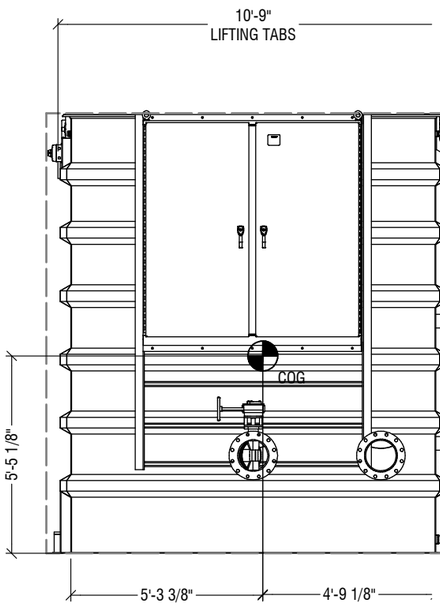

NOTES:

ENGINEER'S SEAL

PRELIMINARY
NOT FOR CONSTRUCTION

THE INFORMATION ON THIS DRAWING IS INTENDED FOR CONCEPTUAL DEVELOPMENT, PRELIMINARY DESIGN, OR FOR GUIDANCE ONLY. THIS DOCUMENT SHOULD NOT BE CONSIDERED A FINALIZED PROFESSIONAL WORK PRODUCT.

REV	DESCRIPTION	DATE	BY	CHK	APP
A	ISSUED FOR REVIEW	21-FEB-23	SBW	JE	JE

REVISIONS

9087A 198 Street Langley, BC Canada V1M 3B1
Phone : 604-638-0760 Fax: 604-638-0795
www.awcsolutions.ca

THIS DRAWING IS THE PROPERTY OF AWC AND CONTAINS PROPRIETARY AND CONFIDENTIAL INFORMATION WHICH MUST NOT BE DUPLICATED, USED OR DISCLOSED OTHER THAN EXPRESSLY AUTHORIZED BY AWC.

CLIENT	CITY & BOROUGH OF WRANGELL
PROJECT	WRANGELL WTP
TITLE	DAF LAYOUT GENERAL ARRANGEMENT DRAWING
SCALE	NTS
PROJECTION	
DEFAULT UNITS	in
SHEET SIZE	17 x 11
SHEET	11 OF 12
DRAWING NO.	17805-PI-GAD-200
REV	A

FILE: M:\Shared\Customers\CRW Engineering\17805 Wrangell AK\5 Engineering\5.13 Piping\5.13.H Diagrams & Dwgs (2D)\5.13.H.1 GAs & Elev Dwgs

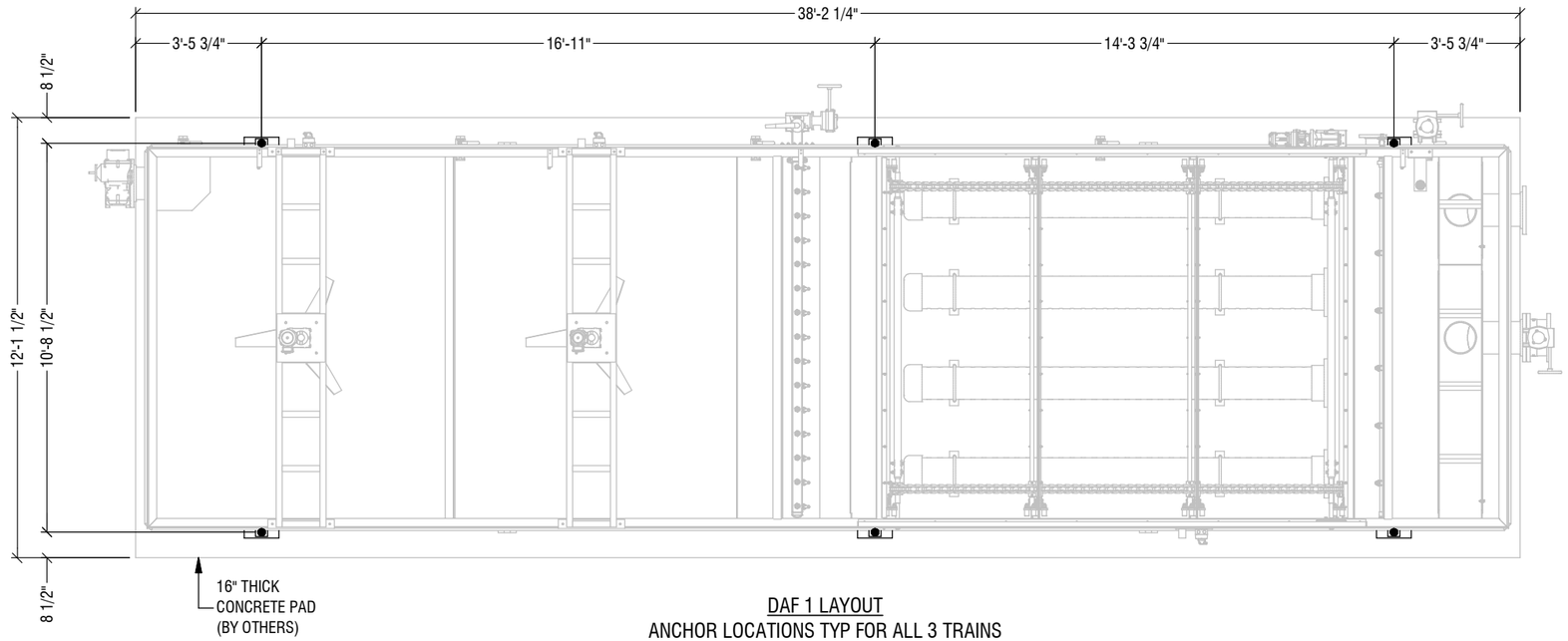

DAF 1 LAYOUT
ANCHOR LOCATIONS TYP FOR ALL 3 TRAINS

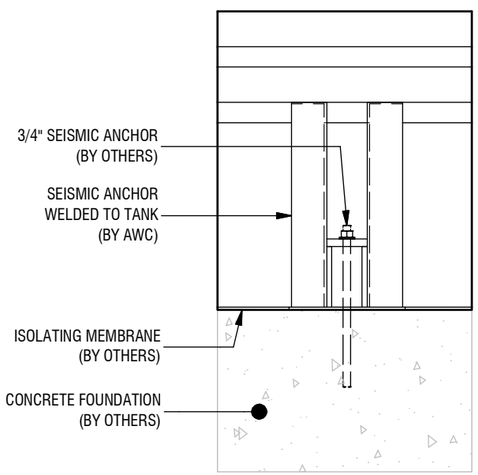

SEISMIC ANCHOR DETAIL
ELEVATION VIEW

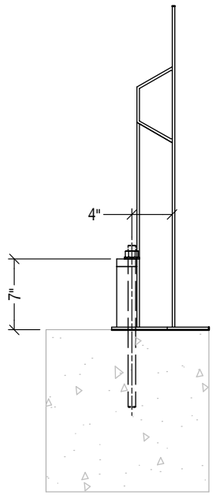

SEISMIC ANCHOR DETAIL
SIDE VIEW

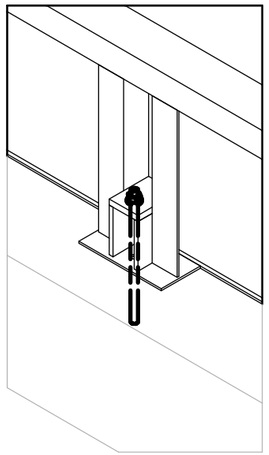

ISO VIEW

NOTES:

ENGINEER'S SEAL

PRELIMINARY
NOT FOR CONSTRUCTION

THE INFORMATION ON THIS DRAWING IS INTENDED FOR CONCEPTUAL DEVELOPMENT, PRELIMINARY DESIGN, OR FOR GUIDANCE ONLY. THIS DOCUMENT SHOULD NOT BE CONSIDERED A FINALIZED PROFESSIONAL WORK PRODUCT.

REV	DESCRIPTION	DATE	BY	CHK	APP
A	ISSUED FOR REVIEW	21-FEB-23	SBW	JE	

REVISIONS

9087A 198 Street Langley, BC Canada V1M 3B1
Phone : 604-638-0760 Fax: 604-638-0795
www.awcsolutions.ca

THIS DRAWING IS THE PROPERTY OF AWC AND CONTAINS PROPRIETARY AND CONFIDENTIAL INFORMATION WHICH MUST NOT BE DUPLICATED, USED OR DISCLOSED OTHER THAN EXPRESSLY AUTHORIZED BY AWC.

CLIENT: CITY & BOROUGH OF WRANGELL
PROJECT: WRANGELL WTP
TITLE: DAF LAYOUT GENERAL ARRANGEMENT DRAWING

SCALE	PROJECTION	DEFAULT UNITS	SHEET SIZE	SHEET
NTS		in	17 x 11	12 OF 12

DRAWING NO.: **17805-PI-GAD-200** REV: **A**

FILE: M:\Shared\Customers\CRW Engineering\17805 Wrangell AK\5 Engineering\5.13 Piping\5.13.H Diagrams & Dwgs (2D)\5.13.H.1 GAs & Elev Dwgs

REFERENCE DRAWINGS

1. P&ID: 17805-PR-PID-001
2. PLANT LAYOUT: 17805-PI-LAY-001
3. PLATFORM & STAIR GENERAL ARRANGEMENT: 17805-PI-GAD-900
4. STANDARD LIFTING DETAILS: TPL-FAB-200-00 (ALUM)

GENERAL

1. ALL TRAINS ARE IDENTICAL AND NOZZLE LOCATIONS ARE TYPICAL.
2. DIMENSIONS ARE SHOWN IN INCHES (FT-IN) UNLESS STATED OTHERWISE.
3. ALL DIMENSIONS ARE REFERENCED FROM THE OUTSIDE FACE OF THE EXTERIOR WALL PLATES, UNLESS STATED OTHERWISE. ALL ELEVATION DIMENSIONS ARE REFERENCED FROM TOP OF BASE PLATE (1/4" THICK).
4. TOLERANCES:
   TANK DIMENSIONS: +/- 1/4 in
   NOZZLE LOCATIONS: +/- 1/4 in
5. AWC PROVIDES CATHODIC PROTECTION FOR ALL ALUMINUM TANKS.

ENGINEERING, STANDARDS & SPECIFICATION

1. AWC WILL PERFORM SEISMIC ANCHOR SIZING AS PER THE SPECIFICATIONS AND APPLICABLE GOVERNING CODES AND STANDARDS.
2. AWC WILL PROVIDE STAMPED ANCHOR DETAILS SHOWING THE REQUIRED REACTION FORCES INCLUDING THE ANCHOR BOLT SIZE, MATERIAL, AND GRADE.
3. ALL CALCULATIONS AND DESIGN RELATED TO CONCRETE INCLUDING STRENGTH, ANCHOR BOLT EMBEDMENT DEPTH, AND EPOXY SELECTION BY OTHERS.
4. STRUCTURAL DESIGN BY AWC WILL BE AUTHENTICATED BY A 3RD PARTY STRUCTURAL ENGINEER REGISTERED IN THE STATE OF ALASKA, USA. ISSUED FOR CONSTRUCTION (IFC) ONLY.
5. ALL WELDED PIPE SPOOLS TO CONFORM TO ASME B31.3.
6. ALL AWC ALUMINUM TANKS ARE NSF61 COMPLIANT WHEN THE WATER IS WITHIN A PH RANGE OF 6-9.
7. ALL WETTED FASTENERS INSIDE TANK TO BE ISOLATED FROM DISSIMILAR METAL CONTACT.

FINISH

1. ALL WELDS TO BE CLEANED USING A STAINLESS STEEL WIRE BRUSH.
2. ALL WELDED SS WATER SERVICE PIPING TO BE PICKLED & PASSIVATED AS PER ASTM A967-A967M-17 AND ASTM A380 / A380M-17 USING AVESTA RED ONE 240.

TESTING

1. ALL WELDS TO BE VISUALLY INSPECTED FOR DEFECTS.
2. ALL PIPING TO BE HYDROTESTED TO ASME B31.3 STANDARDS.

ELECTRICAL

1. MINIMUM 3FT OF CLEARANCE REQUIRED IN FRONT OF ANY ELECTRICAL PANEL / JUNCTION BOX.

INSTALLATION

1. ISOLATION MEMBRANE IS REQUIRED BETWEEN THE **8"** THICK CONCRETE PAD AND THE BOTTOM OF THE TANK(S) BASEPLATE. MEMBRANE TO BE SUPPLIED AND INSTALLED BY OTHERS. THE RECOMMENDED LAYOUT DIMENSIONS CAN BE FOUND ON 17805-PI-LAY-001.
2. SUPPLY AND INSTALLATION OF SEISMIC ANCHOR BOLTS BY OTHERS.
3. ANY INTERCONNECTING PIPING BETWEEN AWC'S EQUIPMENT AND THE WTP TO BE DESIGNED, SUPPLIED & INSTALLED BY OTHERS.
4. TANK NOZZLES SHALL NOT BE SUBJECTED TO EXTERNAL PIPING FORCES AND MOMENTS. ZERO LOADING WILL BE ACCEPTED.

SHIPPED LOOSE ITEMS

1. SEE NOTES ON PROJECT PIPING AND INSTRUMENT DIAGRAM (17805-PR-PID-001) FOR VALVE STEM EXTENSIONS OR CHAIN WHEEL ACTUATORS, IF APPLICABLE. IF NO NOTE IS PROVIDED ON THE P&ID, THE VALVE WILL BE SHIPPED WITH A SUPPLIER STANDARD ACTUATOR OR HANDLE
2. SHIPPED LOOSE ITEMS:
   - ALL MOTORIZED VALVES
   - EFFLUENT CROSS

ESTIMATED WEIGHTS (W/ EQUIPMENT)

1. TANK (EACH TRAIN)

DRY WEIGHT (TANK ONLY)	8,800 LBS
DRY WEIGHT (AS SHIPPED, PARTIALLY ASSEMBLED)	10,050 LBS
DRY WEIGHT (FULLY ASSEMBLED)	14,500 LBS
OPERATING WEIGHT (WITH WATER & MEDIA)	270,000 LBS

LEGEND

BY AWC

BY OTHERS

FUTURE

10 / HV-01 — ITEM NUMBER / P&ID TAG NUMBER

TP-01 — P&ID TIE POINT NUMBER

PARTS LIST

ITEM	QTY	DESCRIPTION	SIZE (in)	MATERIAL	MANUFACTURER	MODEL #
1	9	BALL VALVE, FNPT	1/2"	316 SS	MA STEWART	G2E
2	3	BALL VALVE, FNPT	2"	316 SS	MA STEWART	G2E
4	3	BUTTERFLY VALVE, C/W HANDWHEEL	12"	C.I.	DEZURIK	BAW
6	3	BUTTERFLY VALVE, ON/OFF	12"	C.I.	DEZURIK/ROTORK	BAW/IQT1000
7	3	ANODE ASSEMBLY	45"	MAGNESIUM / AL-6061-T6	AWC	N/A
8	3	PRESSURE GAUGE, 2-1/2" DIAL, 0-15PSI	1/4"	316 SS	WIKA	213.53DW/2-1/2/1/4
9	3	PRESSURE TRANSMITTER	1/4"		WIKA	A10
10	3	LEVEL TRANSMITTER, RADAR	1-1/2"	PVDF	VEGA	VEGAPULS PS31.XXXXXNQHB
11	3	TURBIDITY METER W/ BRACKET		N/A	HACH	TU5300
12	1	UNIVERSAL CONTROLLER			HACH	SC1000
13	1	REMOTE CONTROL PANEL	T.B.D		T.B.D	T.B.D
3	6	BUTTERFLY VALVE, MODULATING	6"	C.I.	DEZURIK/ROTORK	BAW/IQT500
5	6	BUTTERFLY VALVE, ON/OFF	6"	C.I.	DEZURIK/ROTORK	BAW/IQT500

TIE-POINT SCHEDULE

ITEM	DESCRIPTION	SIZE (in)	TYPE	LOCATION
03-TP-140	INFLUENT	6"	FLANGE, FF, #150	TRAIN #1, FILTER 1
03-TP-141	AIR SCOUR	6"	FLANGE, FF, #150	TRAIN #1, FILTER 1
03-TP-142	FILTERED WATER	6"	FLANGE, FF, #150	TRAIN #1, FILTER 1
03-TP-143	WASTE WATER	6"	FLANGE, FF, #150	TRAIN #1, FILTER 1
03-TP-144	BACKWASH	12"	FLANGE, FF, #150	TRAIN #1, FILTER 1
03-TP-160	INFLUENT	6"	FLANGE, FF, #150	TRAIN #1, FILTER 2
03-TP-161	AIR SCOUR	6"	FLANGE, FF, #150	TRAIN #1, FILTER 2
03-TP-162	FILTERED WATER	6"	FLANGE, FF, #150	TRAIN #1, FILTER 2
03-TP-163	WASTE WATER	6"	FLANGE, FF, #150	TRAIN #1, FILTER 2
03-TP-164	BACKWASH	12"	FLANGE, FF, #150	TRAIN #1, FILTER 2
03-TP-180	INFLUENT	6"	FLANGE, FF, #150	TRAIN #1, FILTER 3
03-TP-181	AIR SCOUR	6"	FLANGE, FF, #150	TRAIN #1, FILTER 3
03-TP-182	FILTERED WATER	6"	FLANGE, FF, #150	TRAIN #1, FILTER 3
03-TP-183	WASTE WATER	6"	FLANGE, FF, #150	TRAIN #1, FILTER 3
03-TP-184	BACKWASH	12"	FLANGE, FF, #150	TRAIN #1, FILTER 3
03-TP-190	OVERFLOW	16"	PLATE FLANGE	TRAIN #1, FILTER 3

SHEET INDEX:

1: GENERAL NOTES & PART LISTS
2: ISO VIEWS
3: PLAN VIEW
4: PLAN VIEW - VALVES
5: ELEVATION - NORTH
6: ELEVATION - SOUTH
7: DETAILS - SOUTH EL
8: ELEVATION - EAST
9: ELEVATION - WEST
10: SECTION - INTERNAL
11: SECTION - FILTER CHAMBER
12: DETAIL - RCP PANELS
13: SHIPPING ENVELOPE
14: ANCHORING

FILTER TRAIN
QTY: 1 REQUIRED

NOTES:

ENGINEER'S SEAL

PRELIMINARY
NOT FOR CONSTRUCTION

THE INFORMATION ON THIS DRAWING IS INTENDED FOR CONCEPTUAL DEVELOPMENT, PRELIMINARY DESIGN, OR FOR GUIDANCE ONLY. THIS DOCUMENT SHOULD NOT BE CONSIDERED A FINALIZED PROFESSIONAL WORK PRODUCT.

REV	DESCRIPTION	DATE	BY	CHK	APP
A	ISSUED FOR REVIEW	21-FEB-23	SBW	JE	TG

REVISIONS

9087A 198 Street Langley, BC Canada V1M 3B1
Phone : 604-638-0760 Fax: 604-638-0795
www.awcsolutions.ca

THIS DRAWING IS THE PROPERTY OF AWC AND CONTAINS PROPRIETARY AND CONFIDENTIAL INFORMATION WHICH MUST NOT BE DUPLICATED, USED OR DISCLOSED OTHER THAN EXPRESSLY AUTHORIZED BY AWC.

CLIENT: CITY & BOROUGH OF WRANGELL
PROJECT: WRANGELL WTP
TITLE: FILTER TRAIN #1 GENERAL ARRANGEMENT DRAWING

SCALE	PROJECTION	DEFAULT UNITS	SHEET SIZE	SHEET
NTS		in	17 x 11	1 OF 14

DRAWING NO. **17805-PI-GAD-310** REV **A**

FILE: M:\Shared\Customers\CRW Engineering\17805 Wrangell AK\5 Engineering\5.13 Piping\5.13.H Diagrams & Dwgs (2D)\5.13.H.1 GAs & Elev Dwgs

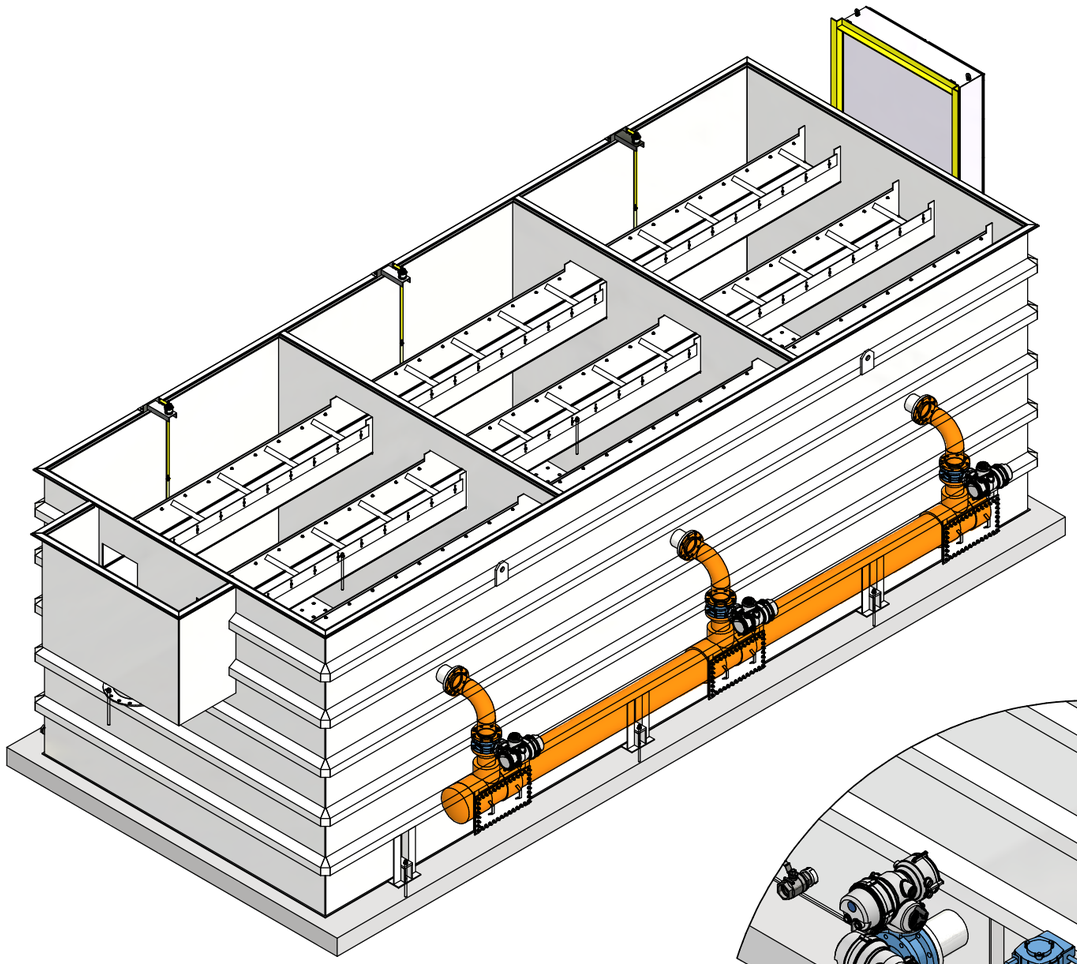

ISO VIEW
FILTER TRAIN #1
INLET PIPING BY OTHERS

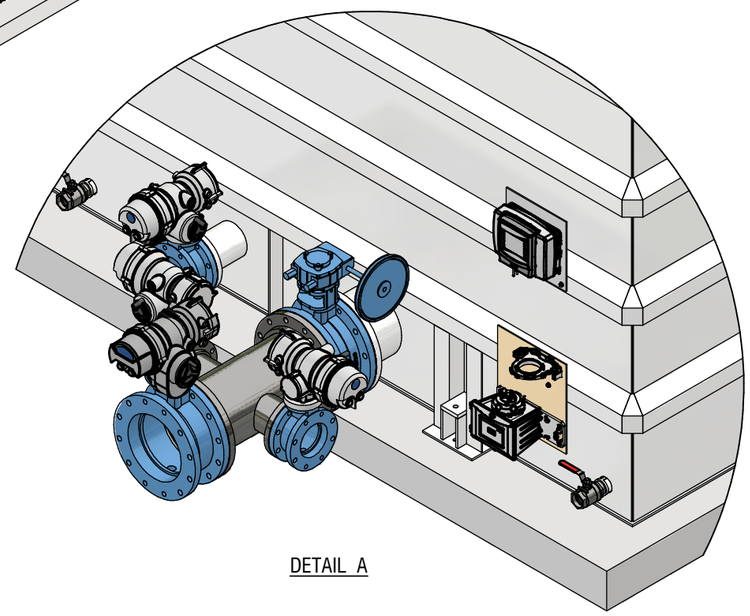

DETAIL A

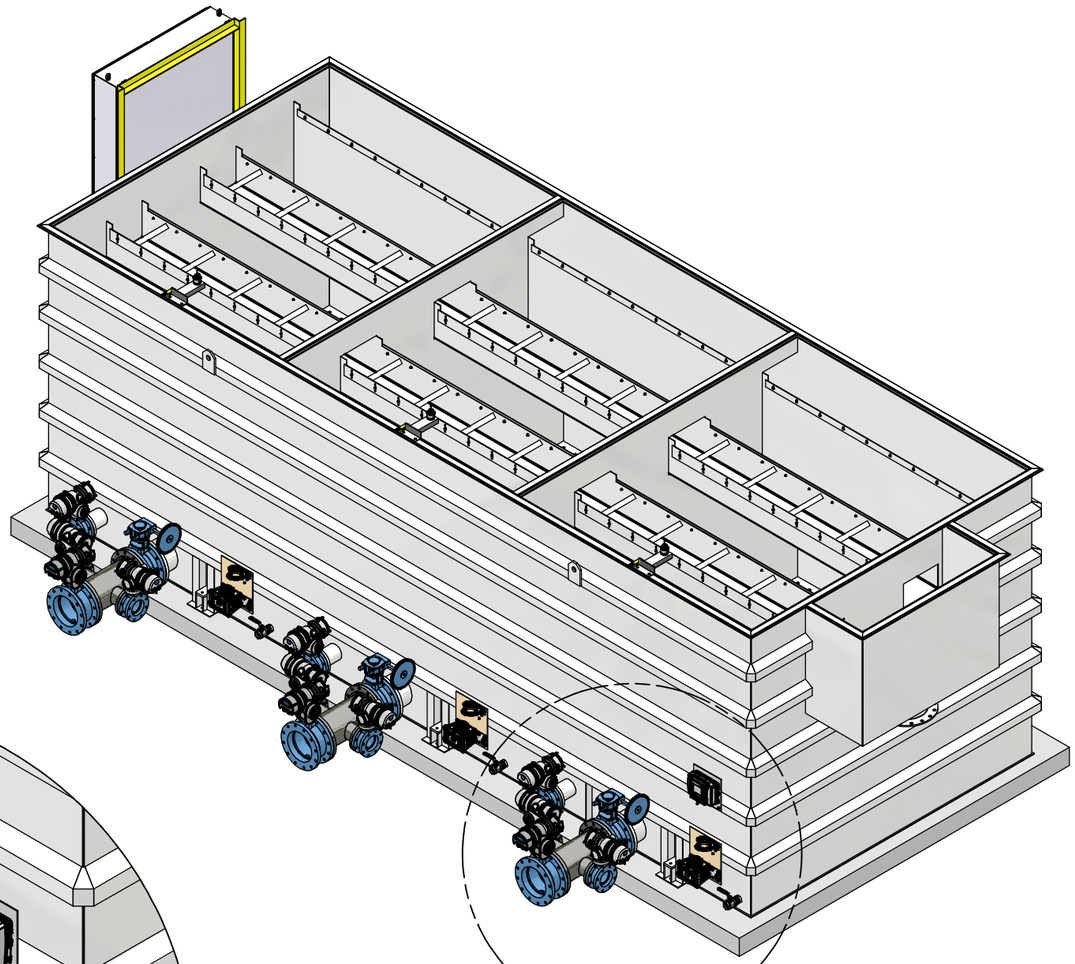

ISO VIEW
FILTER TRAIN #1
EFFLUENT PIPING

NOTES:

ENGINEER'S SEAL

PRELIMINARY
NOT FOR CONSTRUCTION

THE INFORMATION ON THIS DRAWING IS INTENDED FOR CONCEPTUAL DEVELOPMENT, PRELIMINARY DESIGN, OR FOR GUIDANCE ONLY. THIS DOCUMENT SHOULD NOT BE CONSIDERED A FINALIZED PROFESSIONAL WORK PRODUCT.

REV	DESCRIPTION	DATE	BY	CHK	APP
A	ISSUED FOR REVIEW	21-FEB-23	SBW	JE	TE

REVISIONS

9087A 198 Street Langley, BC Canada V1M 3B1
Phone : 604-638-0760 Fax: 604-638-0795
www.awcsolutions.ca

THIS DRAWING IS THE PROPERTY OF AWC AND CONTAINS PROPRIETARY AND CONFIDENTIAL INFORMATION WHICH MUST NOT BE DUPLICATED, USED OR DISCLOSED OTHER THAN EXPRESSLY AUTHORIZED BY AWC.

CLIENT: CITY & BOROUGH OF WRANGELL

PROJECT: WRANGELL WTP

TITLE: FILTER TRAIN #1 GENERAL ARRANGEMENT DRAWING

SCALE	PROJECTION	DEFAULT UNITS	SHEET SIZE	SHEET
NTS		in	17 x 11	2 OF 14

DRAWING NO. **17805-PI-GAD-310** REV **A**

FILE: M:\Shared\Customers\CRW Engineering\17805 Wrangell AK\5 Engineering\5.13 Piping\5.13.H Diagrams & Dwgs (2D)\5.13.H.1 GAs & Elev Dwgs

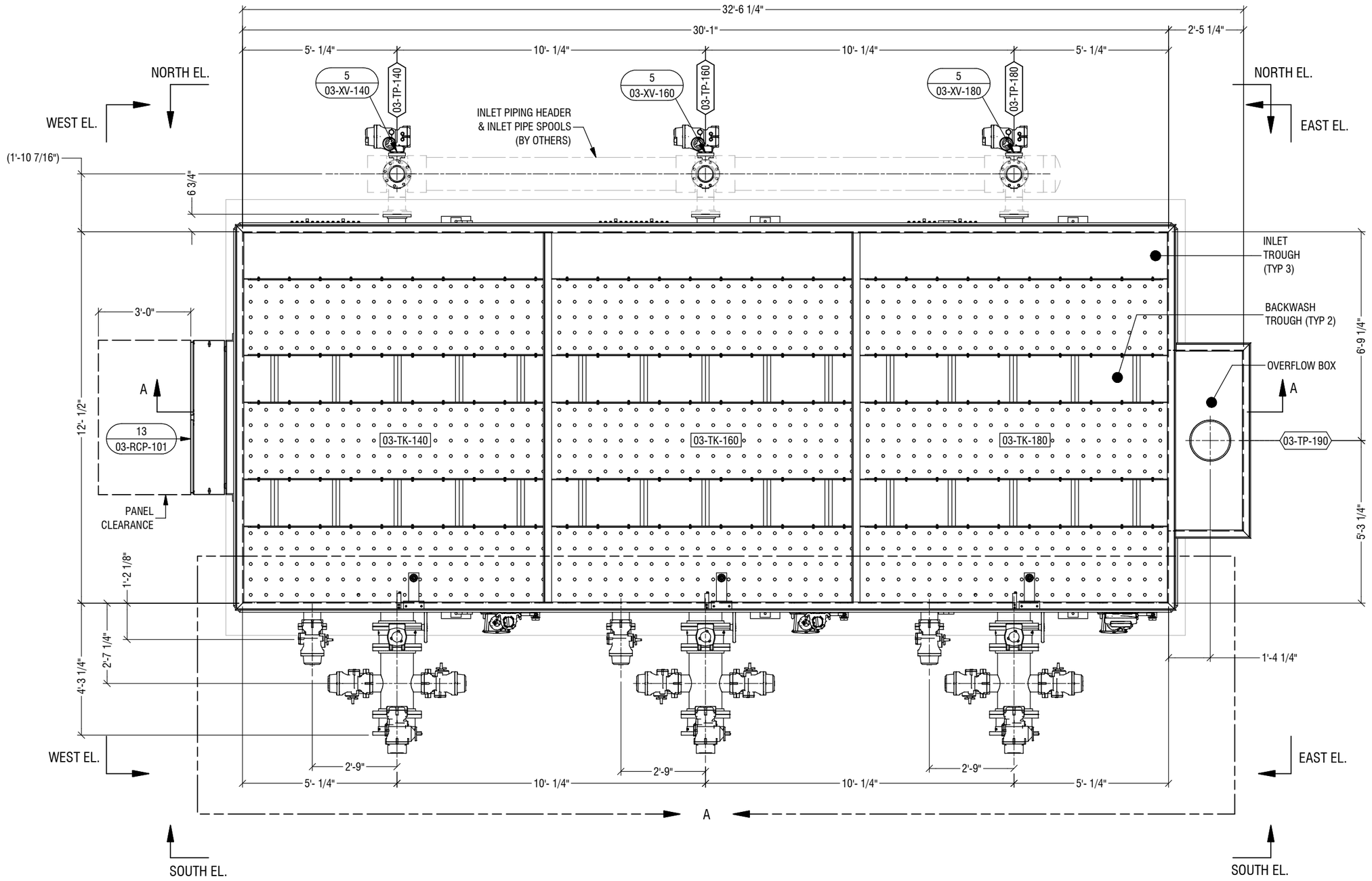

PLAN VIEW

NOTES:

ENGINEER'S SEAL

PRELIMINARY
NOT FOR CONSTRUCTION

THE INFORMATION ON THIS DRAWING IS INTENDED FOR CONCEPTUAL DEVELOPMENT, PRELIMINARY DESIGN, OR FOR GUIDANCE ONLY. THIS DOCUMENT SHOULD NOT BE CONSIDERED A FINALIZED PROFESSIONAL WORK PRODUCT.

REV	DESCRIPTION	DATE	BY	CHK	APP
A	ISSUED FOR REVIEW	21-FEB-23	SBW	DE	TEL

REVISIONS

9087A 198 Street Langley, BC Canada V1M 3B1
Phone : 604-638-0760 Fax: 604-638-0795
www.awcsolutions.ca

THIS DRAWING IS THE PROPERTY OF AWC AND CONTAINS PROPRIETARY AND CONFIDENTIAL INFORMATION WHICH MUST NOT BE DUPLICATED, USED OR DISCLOSED OTHER THAN EXPRESSLY AUTHORIZED BY AWC.

CLIENT: CITY & BOROUGH OF WRANGELL

PROJECT: WRANGELL WTP

TITLE: FILTER TRAIN #1 GENERAL ARRANGEMENT DRAWING

SCALE	PROJECTION	DEFAULT UNITS	SHEET SIZE	SHEET
NTS		in	17 x 11	3 OF 14

DRAWING NO. **17805-PI-GAD-310** REV **A**

FILE: M:\Shared\Customers\CRW Engineering\17805 Wrangell AK\5 Engineering\5.13 Piping\5.13.H Diagrams & Dwgs (2D)\5.13.H.1 GAs & Elev Dwgs

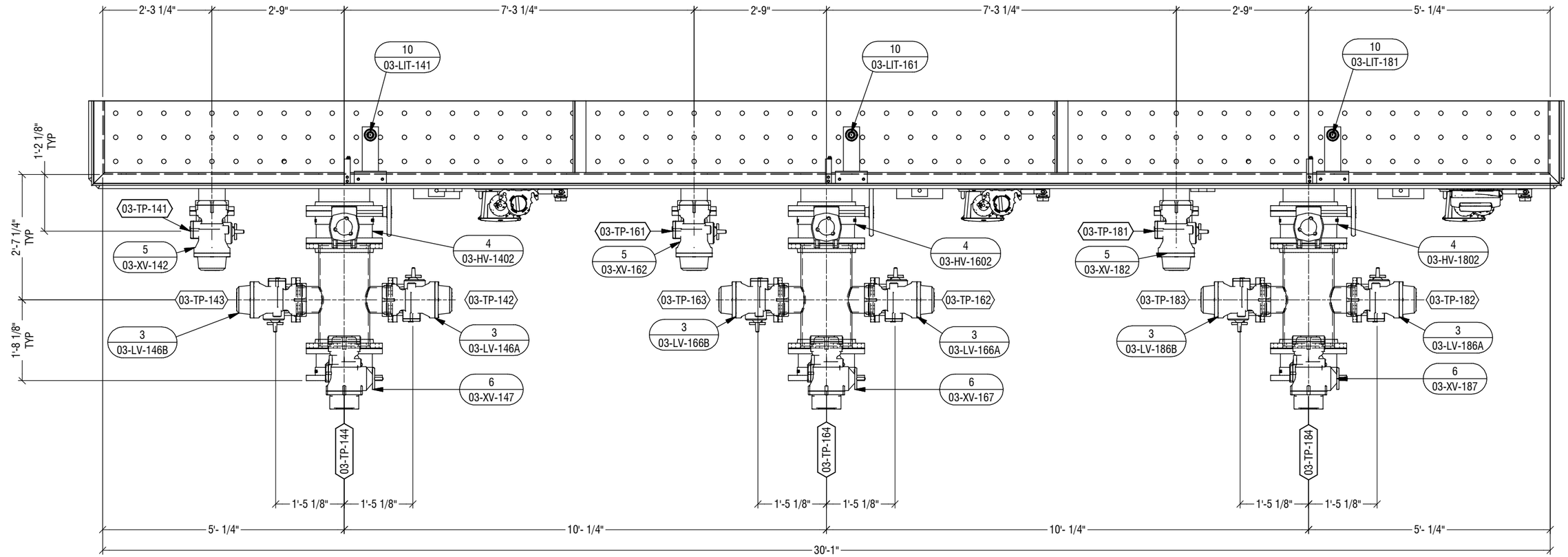

DETAIL A
PLAN VIEW
VALVE DETAILS

NOTES:

ENGINEER'S SEAL

PRELIMINARY
NOT FOR CONSTRUCTION

THE INFORMATION ON THIS DRAWING IS INTENDED FOR CONCEPTUAL DEVELOPMENT, PRELIMINARY DESIGN, OR FOR GUIDANCE ONLY. THIS DOCUMENT SHOULD NOT BE CONSIDERED A FINALIZED PROFESSIONAL WORK PRODUCT.

REV	DESCRIPTION	DATE	BY	CHK	APP
A	ISSUED FOR REVIEW	21-FEB-23	SBW	JE	TEL

REVISIONS

9087A 198 Street Langley, BC Canada V1M 3B1
Phone : 604-638-0760 Fax: 604-638-0795
www.awcsolutions.ca

THIS DRAWING IS THE PROPERTY OF AWC AND CONTAINS PROPRIETARY AND CONFIDENTIAL INFORMATION WHICH MUST NOT BE DUPLICATED, USED OR DISCLOSED OTHER THAN EXPRESSLY AUTHORIZED BY AWC.

CLIENT: CITY & BOROUGH OF WRANGELL
PROJECT: WRANGELL WTP
TITLE: FILTER TRAIN #1 GENERAL ARRANGEMENT DRAWING

SCALE	PROJECTION	DEFAULT UNITS	SHEET SIZE	SHEET
NTS		in	17 x 11	4 OF 14

DRAWING NO. **17805-PI-GAD-310** REV **A**

FILE: M:\Shared\Customers\CRW Engineering\17805 Wrangell AK\5 Engineering\5.13 Piping\5.13.H Diagrams & Dwgs (2D)\5.13.H.1 GAs & Elev Dwgs

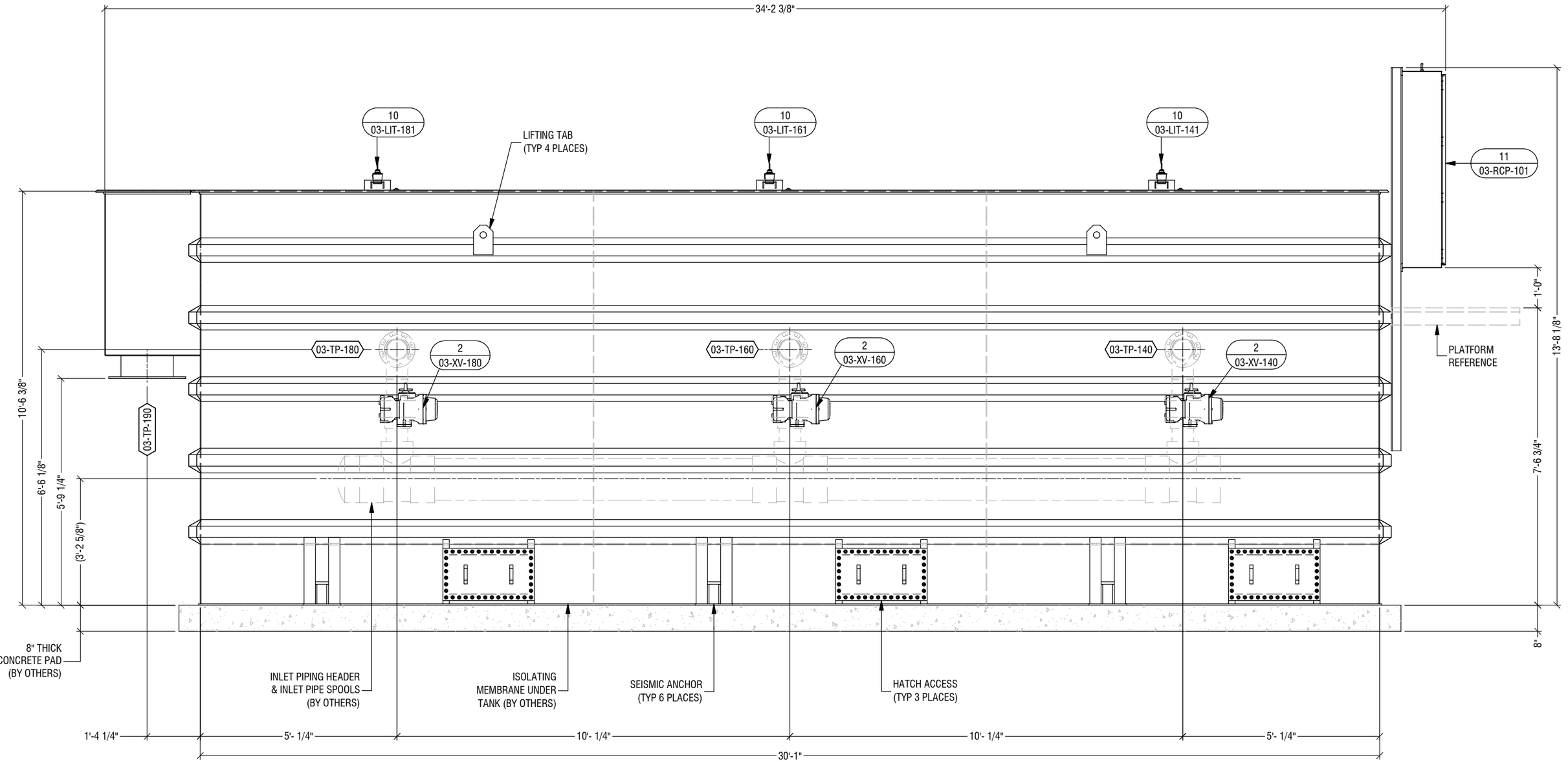

NORTH ELEVATION

NOTES:

ENGINEER'S SEAL

PRELIMINARY
NOT FOR CONSTRUCTION

THE INFORMATION ON THIS DRAWING IS INTENDED FOR CONCEPTUAL DEVELOPMENT, PRELIMINARY DESIGN, OR FOR GUIDANCE ONLY. THIS DOCUMENT SHOULD NOT BE CONSIDERED A FINALIZED PROFESSIONAL WORK PRODUCT.

REV	DESCRIPTION	DATE	BY	CHK	APP
A	ISSUED FOR REVIEW	21-FEB-23	SBW	JE	TEG

REVISIONS

AWC
9087A 198 Street Langley, BC Canada V1M 3B1
Phone : 604-638-0760 Fax: 604-638-0795
www.awcsolutions.ca

THIS DRAWING IS THE PROPERTY OF AWC AND CONTAINS PROPRIETARY AND CONFIDENTIAL INFORMATION WHICH MUST NOT BE DUPLICATED, USED OR DISCLOSED OTHER THAN EXPRESSLY AUTHORIZED BY AWC.

CLIENT: CITY & BOROUGH OF WRANGELL

PROJECT: WRANGELL WTP

TITLE: FILTER TRAIN #1 GENERAL ARRANGEMENT DRAWING

SCALE	PROJECTION	DEFAULT UNITS	SHEET SIZE	SHEET
NTS		in	17 x 11	5 OF 14

DRAWING NO. **17805-PI-GAD-310** REV **A**

FILE: M:\Shared\Customers\CRW Engineering\17805 Wrangell AK\5 Engineering\5.13 Piping\5.13.H Diagrams & Dwgs (2D)\5.13.H.1 GAs & Elev Dwgs

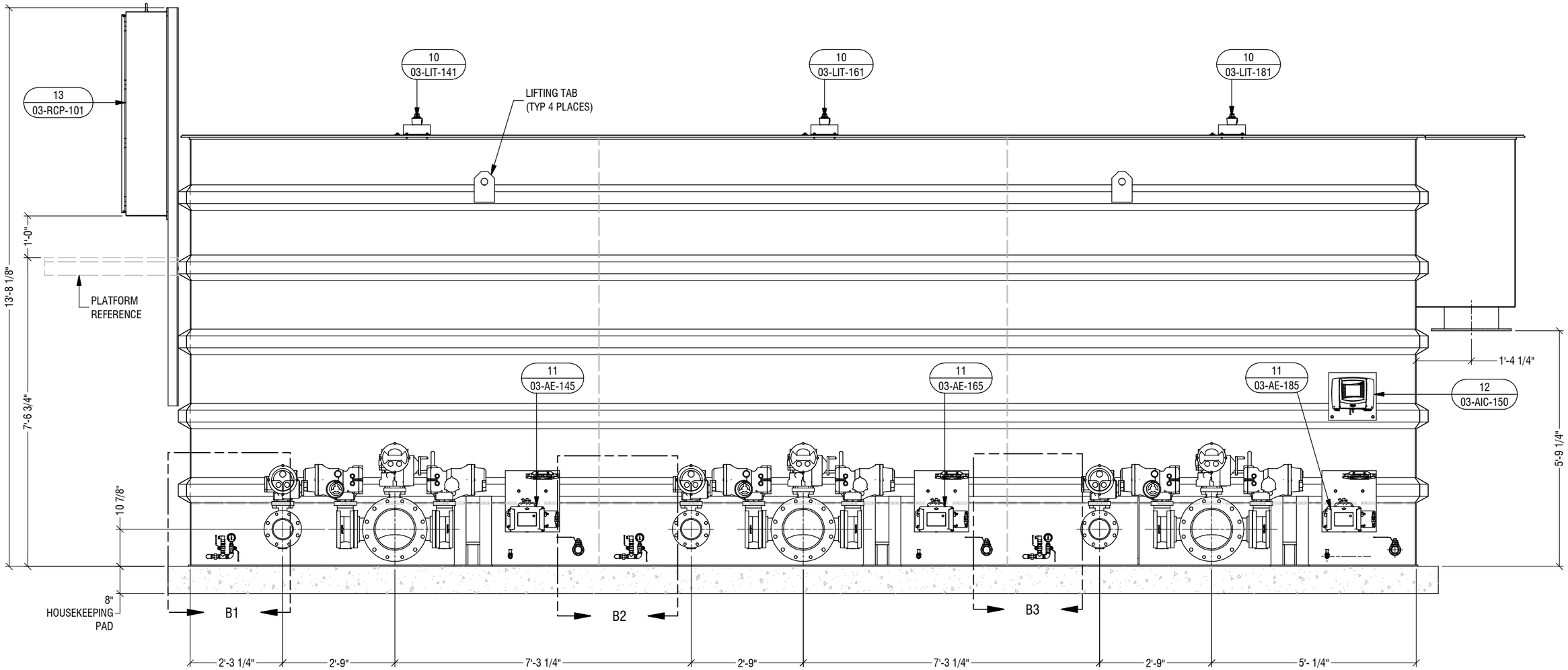

SOUTH ELEVATION

NOTES:

ENGINEER'S SEAL

PRELIMINARY
NOT FOR CONSTRUCTION

THE INFORMATION ON THIS DRAWING IS INTENDED FOR CONCEPTUAL DEVELOPMENT, PRELIMINARY DESIGN, OR FOR GUIDANCE ONLY. THIS DOCUMENT SHOULD NOT BE CONSIDERED A FINALIZED PROFESSIONAL WORK PRODUCT.

REV	DESCRIPTION	DATE	BY	CHK	APP
A	ISSUED FOR REVIEW	21-FEB-23	SBW	JE	

REVISIONS

9087A 198 Street Langley, BC Canada V1M 3B1
Phone : 604-638-0760 Fax: 604-638-0795
www.awcsolutions.ca

THIS DRAWING IS THE PROPERTY OF AWC AND CONTAINS PROPRIETARY AND CONFIDENTIAL INFORMATION WHICH MUST NOT BE DUPLICATED, USED OR DISCLOSED OTHER THAN EXPRESSLY AUTHORIZED BY AWC.

CLIENT: CITY & BOROUGH OF WRANGELL

PROJECT: WRANGELL WTP

TITLE: FILTER TRAIN #1 GENERAL ARRANGEMENT DRAWING

SCALE	PROJECTION	DEFAULT UNITS	SHEET SIZE	SHEET
NTS		in	17 x 11	6 OF 14

DRAWING NO. **17805-PI-GAD-310** REV **A**

FILE: M:\Shared\Customers\CRW Engineering\17805 Wrangell AK\5 Engineering\5.13 Piping\5.13.H Diagrams & Dwgs (2D)\5.13.H.1 GAs & Elev Dwgs

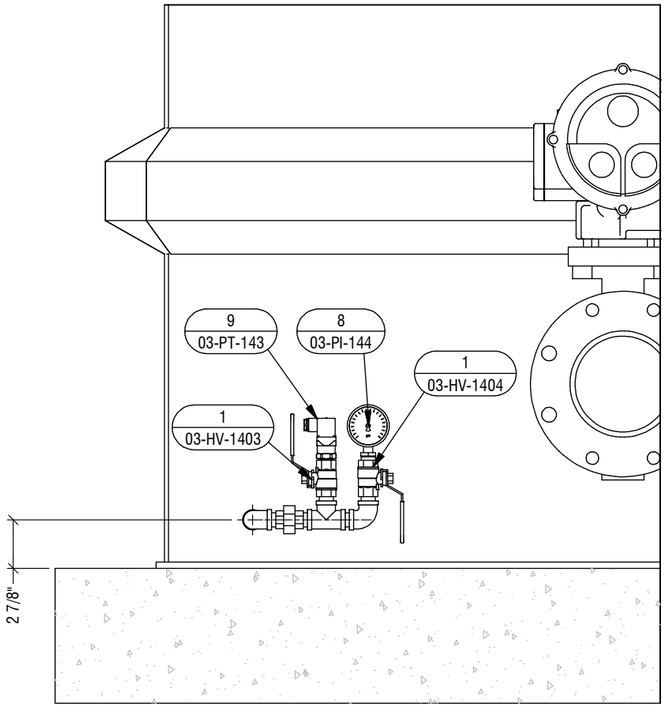

DETAIL B1

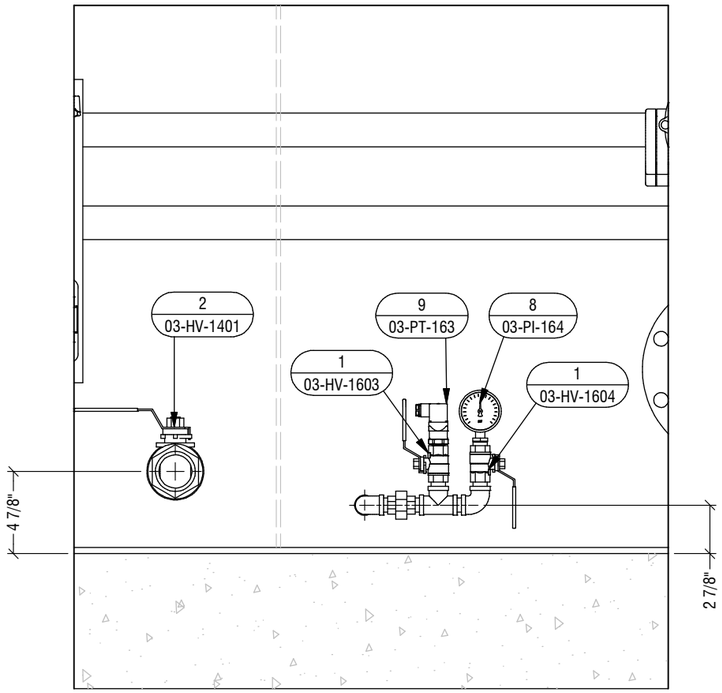

DETAIL B2

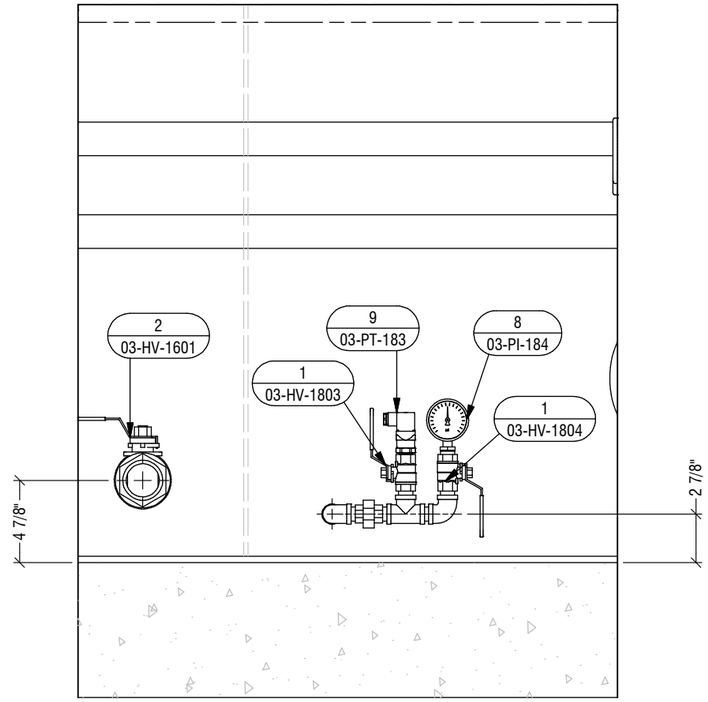

DETAIL B3

NOTES:

ENGINEER'S SEAL

PRELIMINARY
NOT FOR CONSTRUCTION

THE INFORMATION ON THIS DRAWING IS INTENDED FOR CONCEPTUAL DEVELOPMENT, PRELIMINARY DESIGN, OR FOR GUIDANCE ONLY. THIS DOCUMENT SHOULD NOT BE CONSIDERED A FINALIZED PROFESSIONAL WORK PRODUCT.

REV	DESCRIPTION	DATE	BY	CHK	APP
A	ISSUED FOR REVIEW	21-FEB-23	SBW	JE	

REVISIONS

9087A 198 Street Langley, BC Canada V1M 3B1
Phone : 604-638-0760 Fax: 604-638-0795
www.awcsolutions.ca

THIS DRAWING IS THE PROPERTY OF AWC AND CONTAINS PROPRIETARY AND CONFIDENTIAL INFORMATION WHICH MUST NOT BE DUPLICATED, USED OR DISCLOSED OTHER THAN EXPRESSLY AUTHORIZED BY AWC.

CLIENT: CITY & BOROUGH OF WRANGELL

PROJECT: WRANGELL WTP

TITLE: FILTER TRAIN #1 GENERAL ARRANGEMENT DRAWING

SCALE	PROJECTION	DEFAULT UNITS	SHEET SIZE	SHEET
NTS		in	17 x 11	7 OF 14

DRAWING NO. **17805-PI-GAD-310** REV **A**

FILE: M:\Shared\Customers\CRW Engineering\17805 Wrangell AK\5 Engineering\5.13 Piping\5.13.H Diagrams & Dwgs (2D)\5.13.H.1 GAs & Elev Dwgs

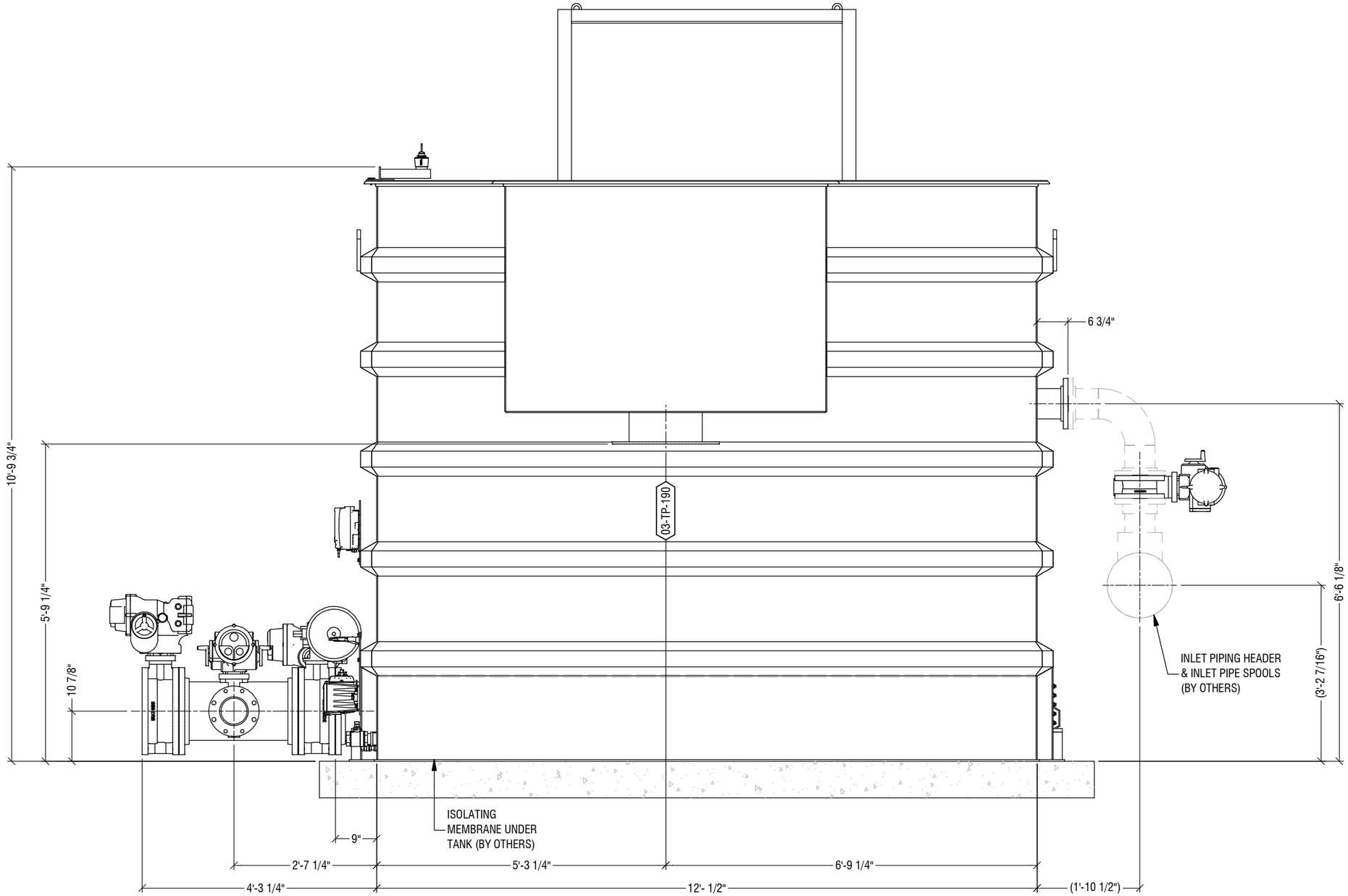

EAST ELEVATION

NOTES:

ENGINEER'S SEAL

PRELIMINARY
NOT FOR CONSTRUCTION

THE INFORMATION ON THIS DRAWING IS INTENDED FOR CONCEPTUAL DEVELOPMENT, PRELIMINARY DESIGN, OR FOR GUIDANCE ONLY. THIS DOCUMENT SHOULD NOT BE CONSIDERED A FINALIZED PROFESSIONAL WORK PRODUCT.

REV	DESCRIPTION	DATE	BY	CHK	APP
A	ISSUED FOR REVIEW	21-FEB-23	SBW	JE	JEG

REVISIONS

9087A 198 Street Langley, BC Canada V1M 3B1
Phone : 604-638-0760 Fax: 604-638-0795
www.awcsolutions.ca

THIS DRAWING IS THE PROPERTY OF AWC AND CONTAINS PROPRIETARY AND CONFIDENTIAL INFORMATION WHICH MUST NOT BE DUPLICATED, USED OR DISCLOSED OTHER THAN EXPRESSLY AUTHORIZED BY AWC.

CLIENT: CITY & BOROUGH OF WRANGELL

PROJECT: WRANGELL WTP

TITLE: FILTER TRAIN #1 GENERAL ARRANGEMENT DRAWING

SCALE	PROJECTION	DEFAULT UNITS	SHEET SIZE	SHEET
NTS		in	17 x 11	8 OF 14

DRAWING NO. **17805-PI-GAD-310** REV **A**

FILE: M:\Shared\Customers\CRW Engineering\17805 Wrangell AK\5 Engineering\5.13 Piping\5.13.H Diagrams & Dwgs (2D)\5.13.H.1 GAs & Elev Dwgs

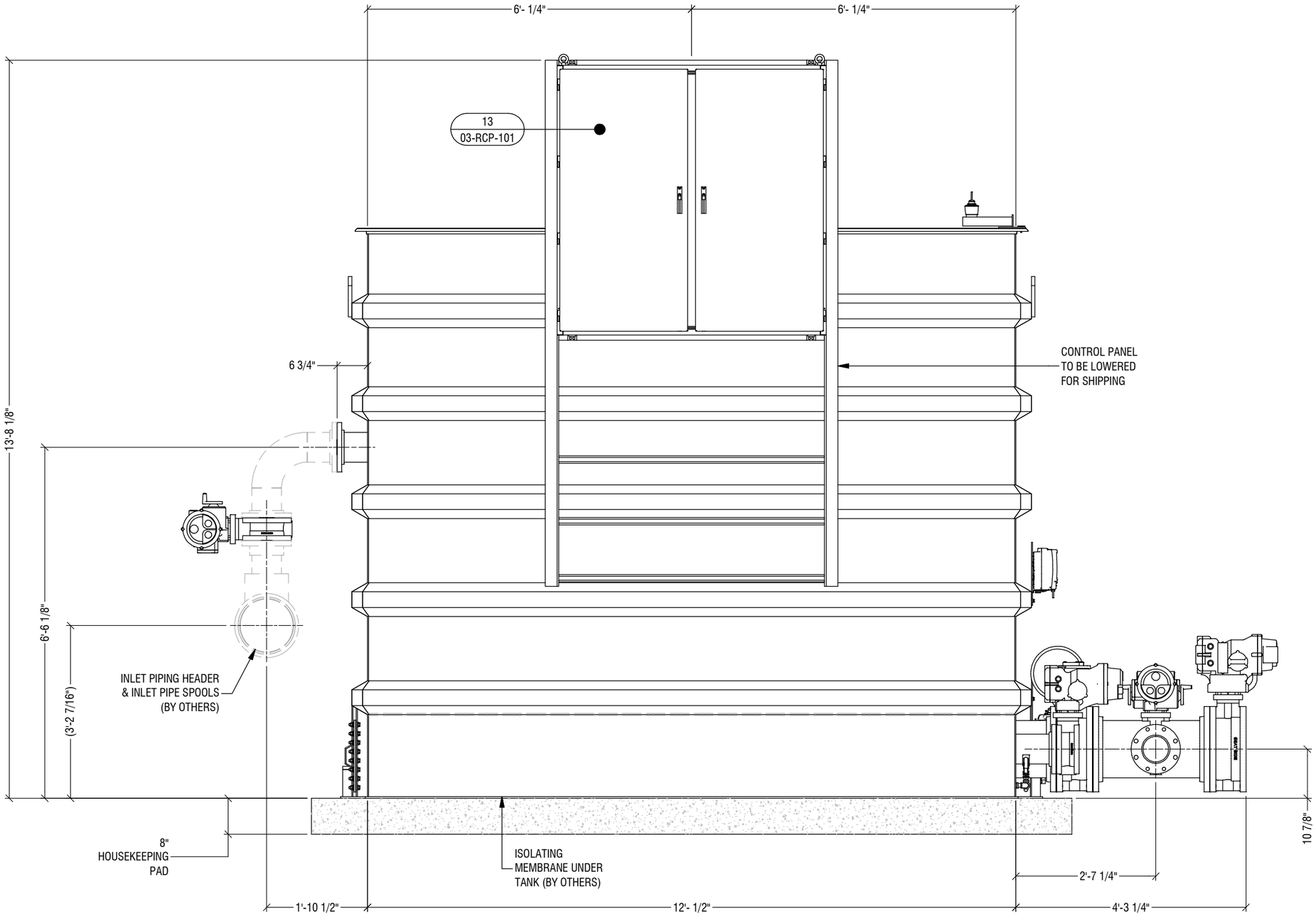

WEST ELEVATION

NOTES:

ENGINEER'S SEAL

PRELIMINARY
NOT FOR CONSTRUCTION

THE INFORMATION ON THIS DRAWING IS INTENDED FOR CONCEPTUAL DEVELOPMENT, PRELIMINARY DESIGN, OR FOR GUIDANCE ONLY. THIS DOCUMENT SHOULD NOT BE CONSIDERED A FINALIZED PROFESSIONAL WORK PRODUCT.

REV	DESCRIPTION	DATE	BY	CHK	APP
A	ISSUED FOR REVIEW	21-FEB-23	SBW	JE	TEC

REVISIONS

9087A 198 Street Langley, BC Canada V1M 3B1
Phone : 604-638-0760 Fax: 604-638-0795
www.awcsolutions.ca

THIS DRAWING IS THE PROPERTY OF AWC AND CONTAINS PROPRIETARY AND CONFIDENTIAL INFORMATION WHICH MUST NOT BE DUPLICATED, USED OR DISCLOSED OTHER THAN EXPRESSLY AUTHORIZED BY AWC.

CLIENT: CITY & BOROUGH OF WRANGELL

PROJECT: WRANGELL WTP

TITLE: FILTER TRAIN #1 GENERAL ARRANGEMENT DRAWING

SCALE	PROJECTION	DEFAULT UNITS	SHEET SIZE	SHEET
NTS		in	17 x 11	9 OF 14

DRAWING NO. **17805-PI-GAD-310** REV **A**

FILE: M:\Shared\Customers\CRW Engineering\17805 Wrangell AK\5 Engineering\5.13 Piping\5.13.H Diagrams & Dwgs (2D)\5.13.H.1 GAs & Elev Dwgs

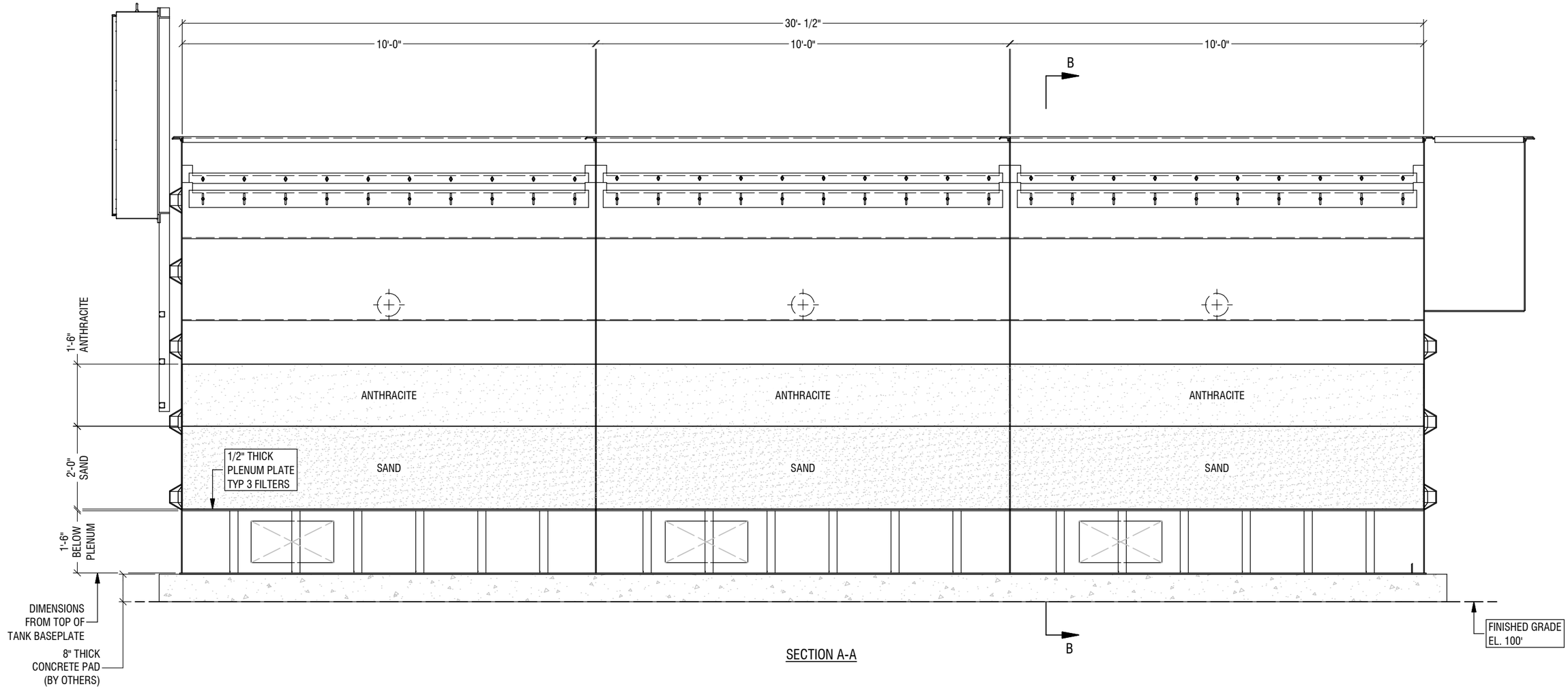

SECTION A-A

NOTES:

ENGINEER'S SEAL

PRELIMINARY
NOT FOR CONSTRUCTION

THE INFORMATION ON THIS DRAWING IS INTENDED FOR CONCEPTUAL DEVELOPMENT, PRELIMINARY DESIGN, OR FOR GUIDANCE ONLY. THIS DOCUMENT SHOULD NOT BE CONSIDERED A FINALIZED PROFESSIONAL WORK PRODUCT.

REV	DESCRIPTION	DATE	BY	CHK	APP
A	ISSUED FOR REVIEW	21-FEB-23	SBW	JE	TEC

REVISIONS

9087A 198 Street Langley, BC Canada V1M 3B1
Phone : 604-638-0760 Fax: 604-638-0795
www.awcsolutions.ca

THIS DRAWING IS THE PROPERTY OF AWC AND CONTAINS PROPRIETARY AND CONFIDENTIAL INFORMATION WHICH MUST NOT BE DUPLICATED, USED OR DISCLOSED OTHER THAN EXPRESSLY AUTHORIZED BY AWC.

CLIENT: CITY & BOROUGH OF WRANGELL

PROJECT: WRANGELL WTP

TITLE: FILTER TRAIN #1 GENERAL ARRANGEMENT DRAWING

SCALE	PROJECTION	DEFAULT UNITS	SHEET SIZE	SHEET
NTS		in	17 x 11	10 OF 14

DRAWING NO. **17805-PI-GAD-310** REV **A**

FILE: M:\Shared\Customers\CRW Engineering\17805 Wrangell AK\5 Engineering\5.13 Piping\5.13.H Diagrams & Dwgs (2D)\5.13.H.1 GAs & Elev Dwgs

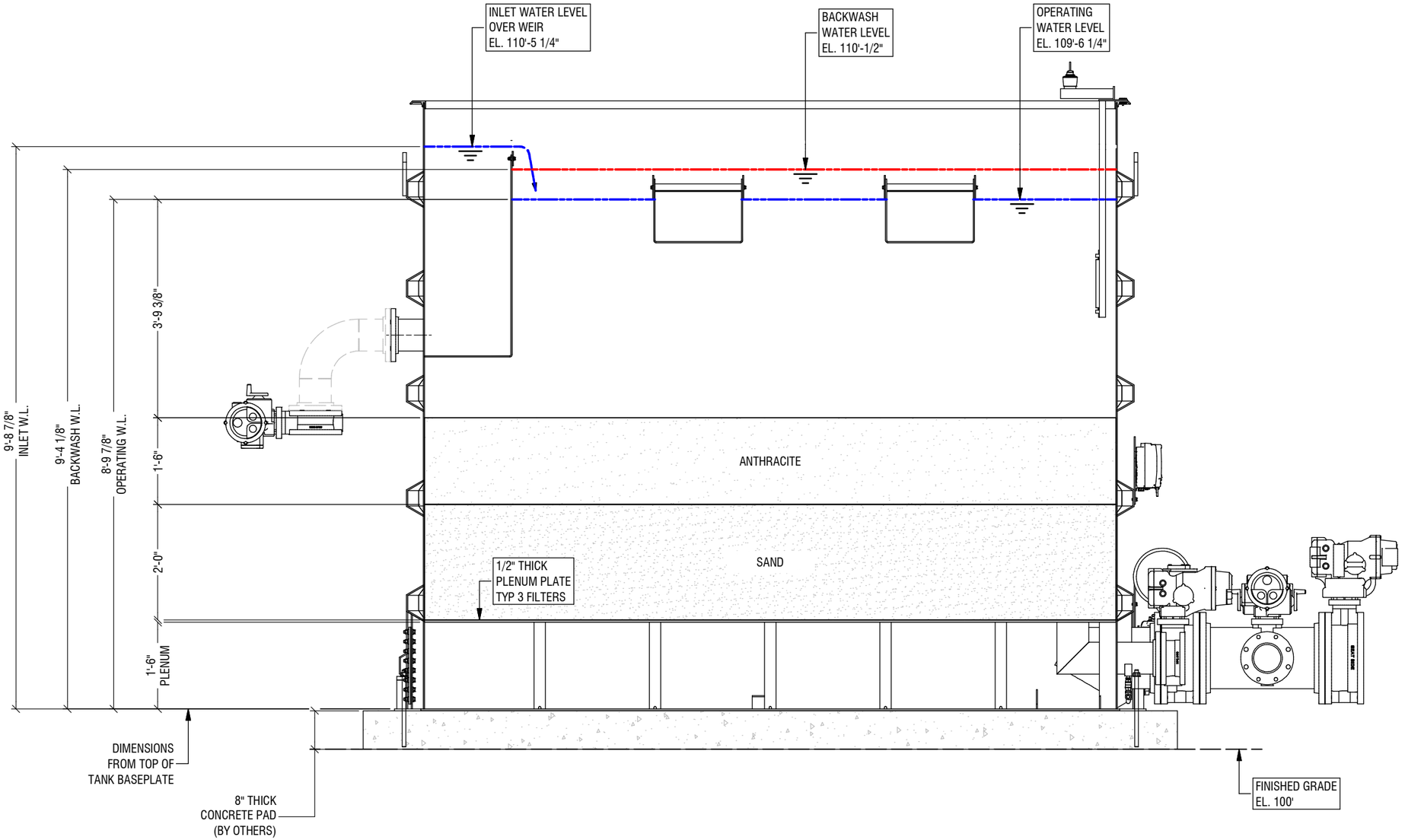

SECTION B-B

NOTES:

ENGINEER'S SEAL

PRELIMINARY
NOT FOR CONSTRUCTION

THE INFORMATION ON THIS DRAWING IS INTENDED FOR CONCEPTUAL DEVELOPMENT, PRELIMINARY DESIGN, OR FOR GUIDANCE ONLY. THIS DOCUMENT SHOULD NOT BE CONSIDERED A FINALIZED PROFESSIONAL WORK PRODUCT.

REV	DESCRIPTION	DATE	BY	CHK	APP
A	ISSUED FOR REVIEW	21-FEB-23	SBW	DE	

REVISIONS

AWC
9087A 198 Street Langley, BC Canada V1M 3B1
Phone : 604-638-0760 Fax: 604-638-0795
www.awcsolutions.ca

THIS DRAWING IS THE PROPERTY OF AWC AND CONTAINS PROPRIETARY AND CONFIDENTIAL INFORMATION WHICH MUST NOT BE DUPLICATED, USED OR DISCLOSED OTHER THAN EXPRESSLY AUTHORIZED BY AWC.

CLIENT: CITY & BOROUGH OF WRANGELL

PROJECT: WRANGELL WTP

TITLE: FILTER TRAIN #1 GENERAL ARRANGEMENT DRAWING

SCALE	PROJECTION	DEFAULT UNITS	SHEET SIZE	SHEET
NTS		in	17 x 11	11 OF 14

DRAWING NO. **17805-PI-GAD-310** REV **A**

FILE: M:\Shared\Customers\CRW Engineering\17805 Wrangell AK\5 Engineering\5.13 Piping\5.13.H Diagrams & Dwgs (2D)\5.13.H.1 GAs & Elev Dwgs

RCP PANEL INSTALLATION

LOWERED POSITION FOR SHIPPING
THEN RAISE INTO PLACE AT SITE

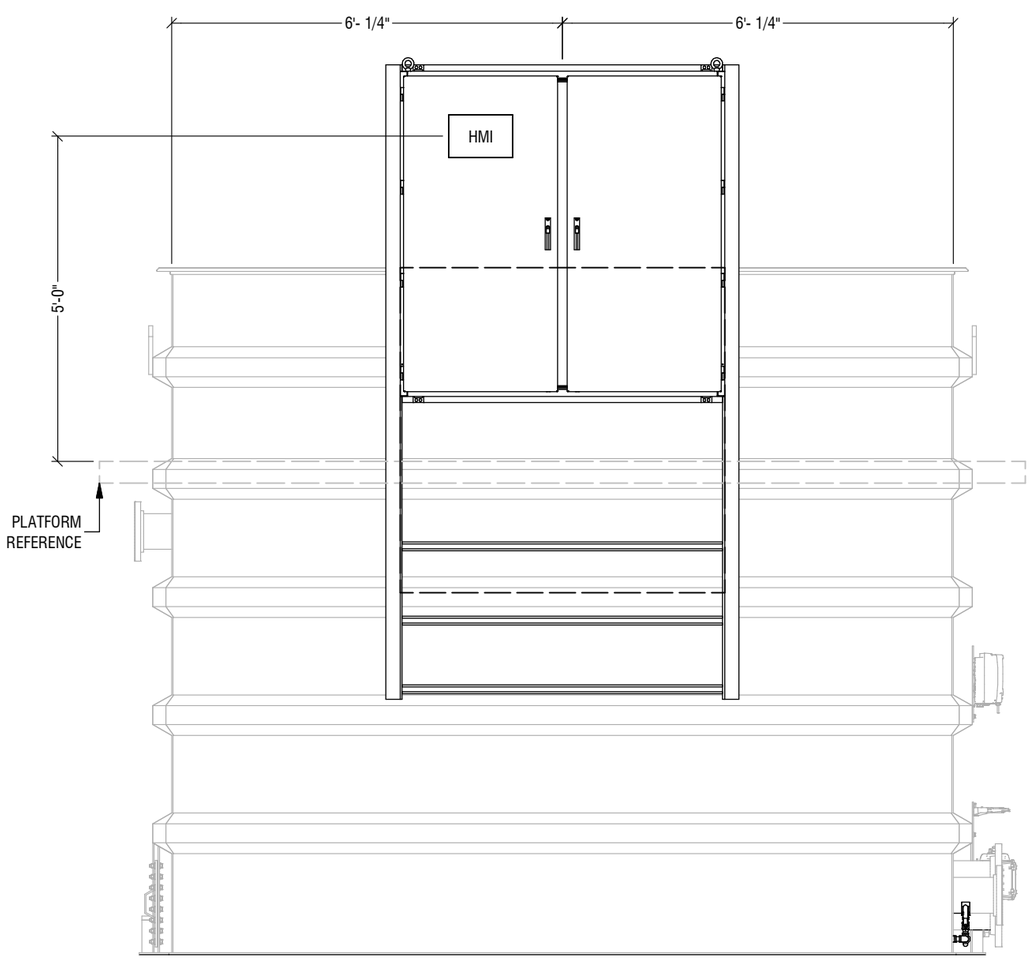

WEST ELEVATION

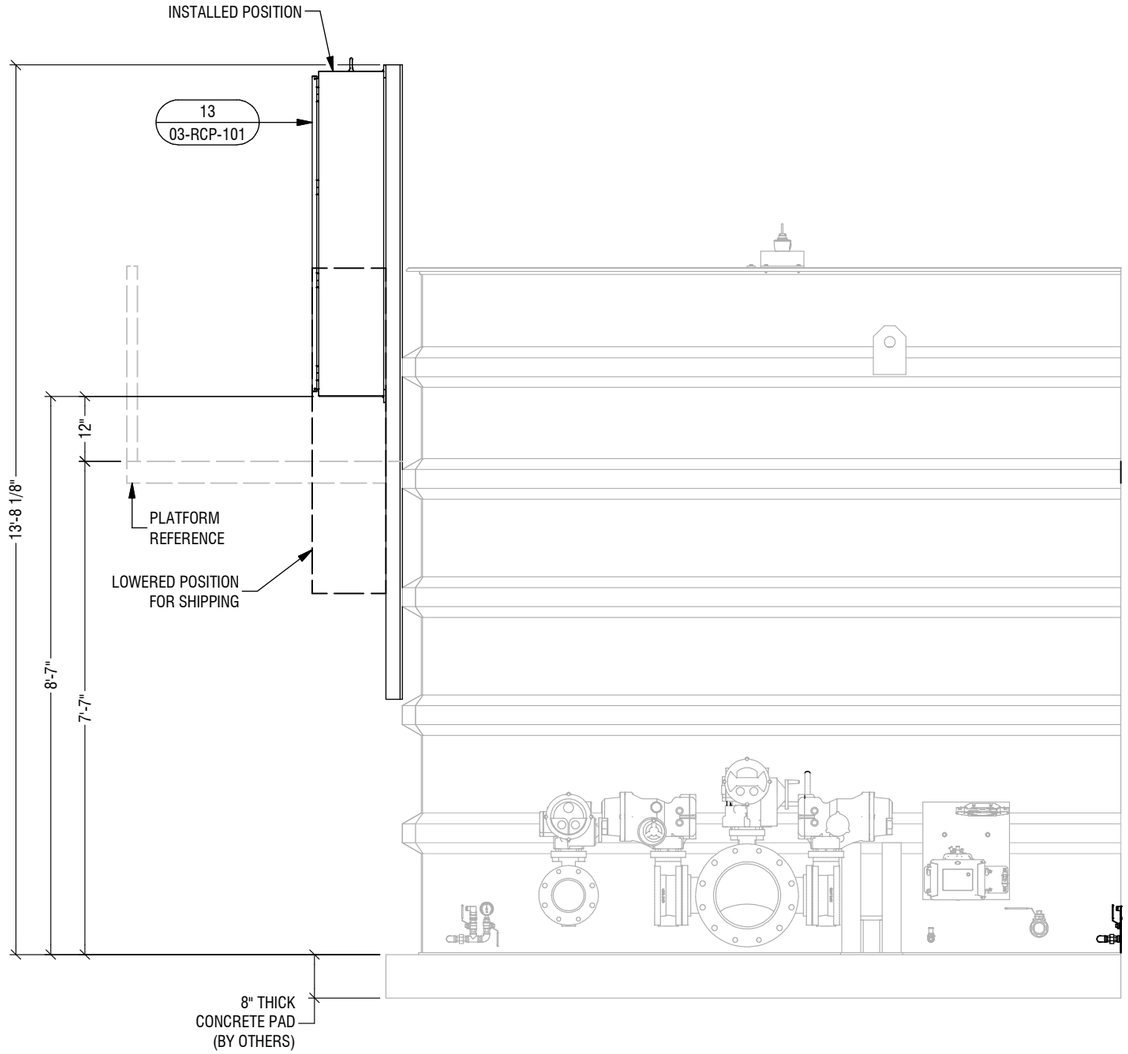

SOUTH ELEVATION
(EFFLUENT SIDE)

NOTES:

ENGINEER'S SEAL

PRELIMINARY
NOT FOR CONSTRUCTION

THE INFORMATION ON THIS DRAWING IS INTENDED FOR CONCEPTUAL DEVELOPMENT, PRELIMINARY DESIGN, OR FOR GUIDANCE ONLY. THIS DOCUMENT SHOULD NOT BE CONSIDERED A FINALIZED PROFESSIONAL WORK PRODUCT.

REV	DESCRIPTION	DATE	BY	CHK	APP
A	ISSUED FOR REVIEW	21-FEB-23	SBW	JE	AEL

REVISIONS

9087A 198 Street Langley, BC Canada V1M 3B1
Phone : 604-638-0760 Fax: 604-638-0795
www.awcsolutions.ca

THIS DRAWING IS THE PROPERTY OF AWC AND CONTAINS PROPRIETARY AND CONFIDENTIAL INFORMATION WHICH MUST NOT BE DUPLICATED, USED OR DISCLOSED OTHER THAN EXPRESSLY AUTHORIZED BY AWC.

CLIENT: CITY & BOROUGH OF WRANGELL
PROJECT: WRANGELL WTP
TITLE: FILTER TRAIN #1 GENERAL ARRANGEMENT DRAWING

SCALE	PROJECTION	DEFAULT UNITS	SHEET SIZE	SHEET
NTS		in	17 x 11	12 OF 14

DRAWING NO. **17805-PI-GAD-310** REV **A**

FILE: M:\Shared\Customers\CRW Engineering\17805 Wrangell AK\5 Engineering\5.13 Piping\5.13.H Diagrams & Dwgs (2D)\5.13.H.1 GAs & Elev Dwgs

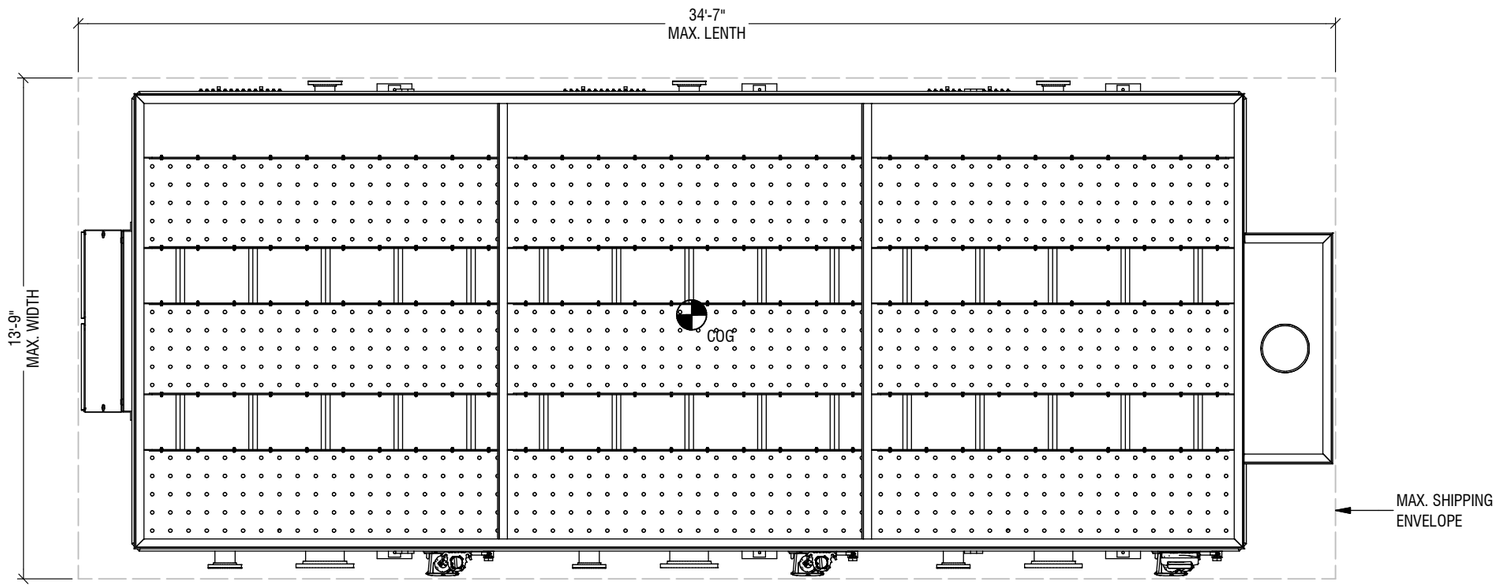

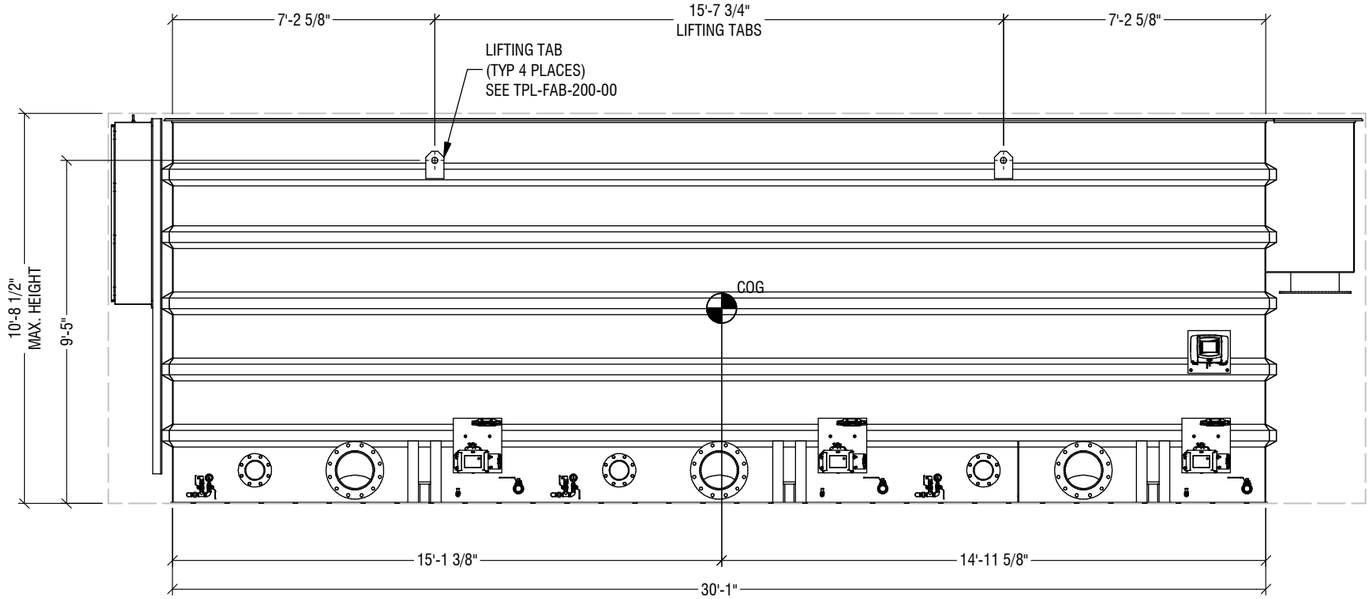

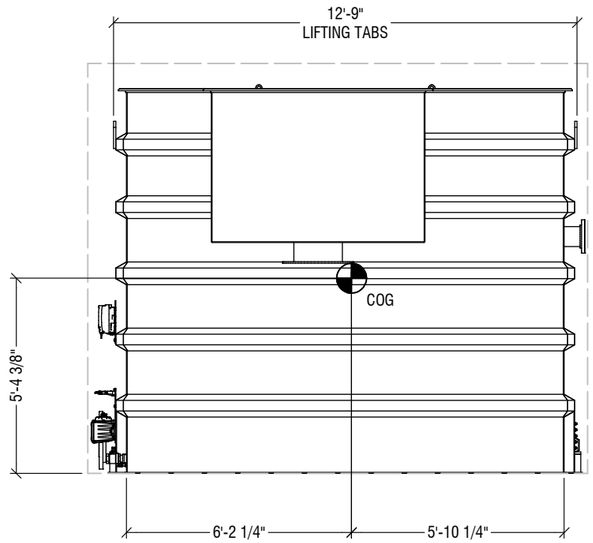

NOTES:

1. SEE COVER SHEET FOR ESTIMATED WEIGHTS.

ENGINEER'S SEAL

PRELIMINARY
NOT FOR CONSTRUCTION

THE INFORMATION ON THIS DRAWING IS INTENDED FOR CONCEPTUAL DEVELOPMENT, PRELIMINARY DESIGN, OR FOR GUIDANCE ONLY. THIS DOCUMENT SHOULD NOT BE CONSIDERED A FINALIZED PROFESSIONAL WORK PRODUCT.

REV	DESCRIPTION	DATE	BY	CHK	APP
A	ISSUED FOR REVIEW	21-FEB-23	SBW	JE	

REVISIONS

9087A 198 Street Langley, BC Canada V1M 3B1
Phone : 604-638-0760 Fax: 604-638-0795
www.awcsolutions.ca

THIS DRAWING IS THE PROPERTY OF AWC AND CONTAINS PROPRIETARY AND CONFIDENTIAL INFORMATION WHICH MUST NOT BE DUPLICATED, USED OR DISCLOSED OTHER THAN EXPRESSLY AUTHORIZED BY AWC.

CLIENT: CITY & BOROUGH OF WRANGELL

PROJECT: WRANGELL WTP

TITLE: FILTER TRAIN #1 GENERAL ARRANGEMENT DRAWING

SCALE	PROJECTION	DEFAULT UNITS	SHEET SIZE	SHEET
NTS		in	17 x 11	13 OF 14

DRAWING NO. **17805-PI-GAD-310** REV **A**

FILE: M:\Shared\Customers\CRW Engineering\17805 Wrangell AK\5 Engineering\5.13 Piping\5.13.H Diagrams & Dwgs (2D)\5.13.H.1 GAs & Elev Dwgs

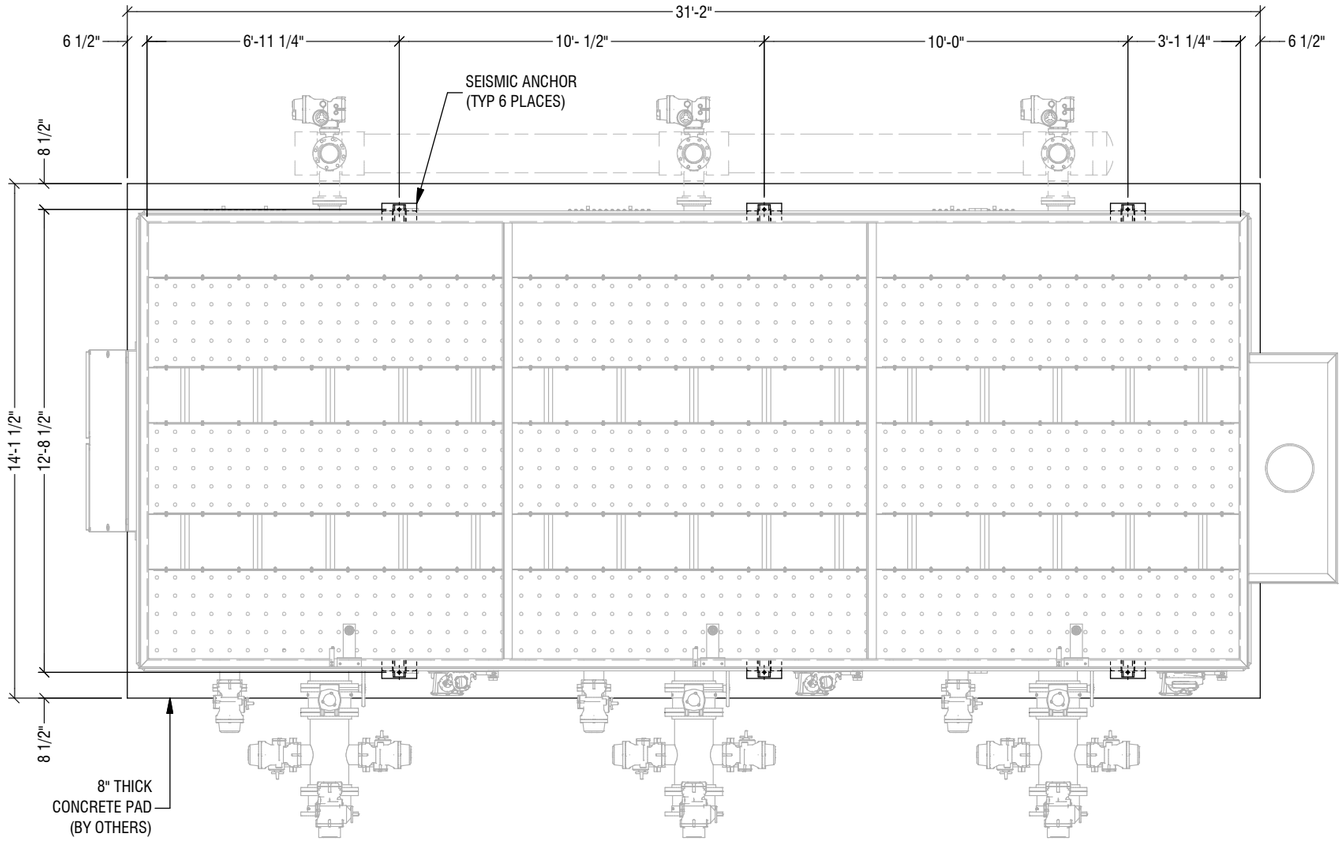

FILTER 1 LAYOUT

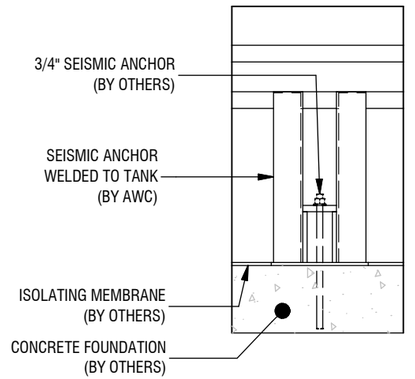

SEISMIC ANCHOR DETAIL
ELEVATION VIEW

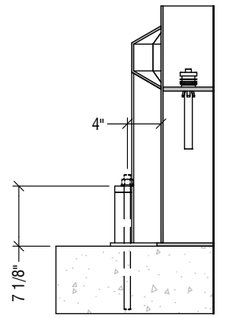

SEISMIC ANCHOR DETAIL
SIDE VIEW

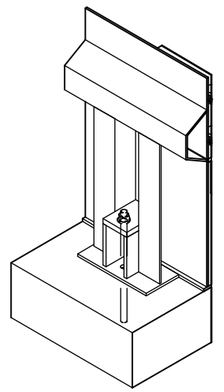

ISO VIEW

NOTES:

ENGINEER'S SEAL

PRELIMINARY
NOT FOR CONSTRUCTION

THE INFORMATION ON THIS DRAWING IS INTENDED FOR CONCEPTUAL DEVELOPMENT, PRELIMINARY DESIGN, OR FOR GUIDANCE ONLY. THIS DOCUMENT SHOULD NOT BE CONSIDERED A FINALIZED PROFESSIONAL WORK PRODUCT.

REV	DESCRIPTION	DATE	BY	CHK	APP
A	ISSUED FOR REVIEW	21-FEB-23	SBW	JE	

REVISIONS

9087A 198 Street Langley, BC Canada V1M 3B1
Phone : 604-638-0760 Fax: 604-638-0795
www.awcsolutions.ca

THIS DRAWING IS THE PROPERTY OF AWC AND CONTAINS PROPRIETARY AND CONFIDENTIAL INFORMATION WHICH MUST NOT BE DUPLICATED, USED OR DISCLOSED OTHER THAN EXPRESSLY AUTHORIZED BY AWC.

CLIENT: CITY & BOROUGH OF WRANGELL

PROJECT: WRANGELL WTP

TITLE: FILTER TRAIN #1 GENERAL ARRANGEMENT DRAWING

SCALE	PROJECTION	DEFAULT UNITS	SHEET SIZE	SHEET
NTS		in	17 x 11	14 OF 14

DRAWING NO. **17805-PI-GAD-310** REV **A**

FILE: M:\Shared\Customers\CRW Engineering\17805 Wrangell AK\5 Engineering\5.13 Piping\5.13.H Diagrams & Dwgs (2D)\5.13.H.1 GAs & Elev Dwgs

REFERENCE DRAWINGS

1. P&ID: 17805-PR-PID-001
2. PLANT LAYOUT: 17805-PI-LAY-001
3. PLATFORM & STAIR GENERAL ARRANGEMENT: 17805-PI-GAD-900
4. STANDARD LIFTING DETAILS: TPL-FAB-200-00 (ALUM)

GENERAL

1. ALL TRAINS ARE IDENTICAL AND NOZZLE LOCATIONS ARE TYPICAL.
2. DIMENSIONS ARE SHOWN IN INCHES (FT-IN) UNLESS STATED OTHERWISE.
3. ALL DIMENSIONS ARE REFERENCED FROM THE OUTSIDE FACE OF THE EXTERIOR WALL PLATES, UNLESS STATED OTHERWISE. ALL ELEVATION DIMENSIONS ARE REFERENCED FROM TOP OF BASE PLATE (1/4" THICK).
4. TOLERANCES:
   TANK DIMENSIONS: +/- 1/4 in
   NOZZLE LOCATIONS: +/- 1/4 in
5. AWC PROVIDES CATHODIC PROTECTION FOR ALL ALUMINUM TANKS.

ENGINEERING, STANDARDS & SPECIFICATION

1. AWC WILL PERFORM SEISMIC ANCHOR SIZING AS PER THE SPECIFICATIONS AND APPLICABLE GOVERNING CODES AND STANDARDS.
2. AWC WILL PROVIDE STAMPED ANCHOR DETAILS SHOWING THE REQUIRED REACTION FORCES INCLUDING THE ANCHOR BOLT SIZE, MATERIAL, AND GRADE.
3. ALL CALCULATIONS AND DESIGN RELATED TO CONCRETE INCLUDING STRENGTH, ANCHOR BOLT EMBEDMENT DEPTH, AND EPOXY SELECTION BY OTHERS.
4. STRUCTURAL DESIGN BY AWC WILL BE AUTHENTICATED BY A 3RD PARTY STRUCTURAL ENGINEER REGISTERED IN THE STATE OF ALASKA, USA. ISSUED FOR CONSTRUCTION (IFC) ONLY.
5. ALL WELDED PIPE SPOOLS TO CONFORM TO ASME B31.3.
6. ALL AWC ALUMINUM TANKS ARE NSF61 COMPLIANT WHEN THE WATER IS WITHIN A PH RANGE OF 6-9.
7. ALL WETTED FASTENERS INSIDE TANK TO BE ISOLATED FROM DISSIMILAR METAL CONTACT.

FINISH

1. ALL WELDS TO BE CLEANED USING A STAINLESS STEEL WIRE BRUSH.
2. ALL WELDED SS WATER SERVICE PIPING TO BE PICKLED & PASSIVATED AS PER ASTM A967-A967M-17 AND ASTM A380 / A380M-17 USING AVESTA RED ONE 240.

TESTING

1. ALL WELDS TO BE VISUALLY INSPECTED FOR DEFECTS.
2. ALL PIPING TO BE HYDROTESTED TO ASME B31.3 STANDARDS.

ELECTRICAL

1. MINIMUM 3FT OF CLEARANCE REQUIRED IN FRONT OF ANY ELECTRICAL PANEL / JUNCTION BOX.

INSTALLATION

1. ISOLATION MEMBRANE IS REQUIRED BETWEEN THE **8"** THICK CONCRETE PAD AND THE BOTTOM OF THE TANK(S) BASEPLATE. MEMBRANE TO BE SUPPLIED AND INSTALLED BY OTHERS. THE RECOMMENDED LAYOUT DIMENSIONS CAN BE FOUND ON 17805-PI-LAY-001.
2. SUPPLY AND INSTALLATION OF SEISMIC ANCHOR BOLTS BY OTHERS.
3. ANY INTERCONNECTING PIPING BETWEEN AWC'S EQUIPMENT AND THE WTP TO BE DESIGNED, SUPPLIED & INSTALLED BY OTHERS.
4. TANK NOZZLES SHALL NOT BE SUBJECTED TO EXTERNAL PIPING FORCES AND MOMENTS. ZERO LOADING WILL BE ACCEPTED.

SHIPPED LOOSE ITEMS

1. SEE NOTES ON PROJECT PIPING AND INSTRUMENT DIAGRAM (17805-PR-PID-001) FOR VALVE STEM EXTENSIONS OR CHAIN WHEEL ACTUATORS, IF APPLICABLE. IF NO NOTE IS PROVIDED ON THE P&ID, THE VALVE WILL BE SHIPPED WITH A SUPPLIER STANDARD ACTUATOR OR HANDLE
2. SHIPPED LOOSE ITEMS:
   - ALL MOTORIZED VALVES
   - EFFLUENT CROSS

ESTIMATED WEIGHTS (W/ EQUIPMENT)

1. TANK (EACH TRAIN)

DRY WEIGHT (TANK ONLY)	8,800 LBS
DRY WEIGHT (AS SHIPPED, PARTIALLY ASSEMBLED)	10,050 LBS
DRY WEIGHT (FULLY ASSEMBLED)	14,500 LBS
OPERATING WEIGHT (WITH WATER & MEDIA)	270,000 LBS

LEGEND

BY AWC

BY OTHERS

FUTURE

10 / HV-01 — ITEM NUMBER / P&ID TAG NUMBER

TP-01 — P&ID TIE POINT NUMBER

PARTS LIST

ITEM	QTY	DESCRIPTION	SIZE (in)	MATERIAL	MANUFACTURER	MODEL #
1	9	BALL VALVE, FNPT	1/2"	316 SS	MA STEWART	G2E
2	3	BALL VALVE, FNPT	2"	316 SS	MA STEWART	G2E
3	3	BUTTERFLY VALVE, C/W HANDWHEEL	12"	C.I.	DEZURIK	BAW
4	3	BUTTERFLY VALVE, ON/OFF	12"	C.I.	DEZURIK/ROTORK	BAW/IQT1000
5	6	BUTTERFLY VALVE, MODULATING	6"	C.I.	DEZURIK/ROTORK	BAW/IQT500
6	6	BUTTERFLY VALVE, ON/OFF	6"	C.I.	DEZURIK/ROTORK	BAW/IQT500
7	3	ANODE ASSEMBLY	45"	MAGNESIUM / AL-6061-T6	AWC	N/A
8	3	PRESSURE GAUGE, 2-1/2" DIAL, 0-15PSI	1/4"	316 SS	WIKA	213.53DW/2-1/2/1/4
9	3	PRESSURE TRANSMITTER	1/4"		WIKA	A10
10	3	LEVEL TRANSMITTER, RADAR	1-1/2"	PVDF	VEGA	VEGAPULS PS31.XXXXXNQHB
11	3	TURBIDITY METER W/ BRACKET		N/A	HACH	TU5300
12	1	UNIVERSAL CONTROLLER			HACH	SC1000
13	1	REMOTE CONTROL PANEL	T.B.D		T.B.D	T.B.D

TIE-POINT SCHEDULE

ITEM	DESCRIPTION	SIZE (in)	TYPE	LOCATION
03-TP-240	INFLUENT	6"	FLANGE, FF, #150	TRAIN #2, FILTER 4
03-TP-241	AIR SCOUR	6"	FLANGE, FF, #150	TRAIN #2, FILTER 4
03-TP-242	FILTERED WATER	6"	FLANGE, FF, #150	TRAIN #2, FILTER 4
03-TP-243	WASTE WATER	6"	FLANGE, FF, #150	TRAIN #2, FILTER 4
03-TP-244	BACKWASH	12"	FLANGE, FF, #150	TRAIN #2, FILTER 4
03-TP-260	INFLUENT	6"	FLANGE, FF, #150	TRAIN #2, FILTER 5
03-TP-261	AIR SCOUR	6"	FLANGE, FF, #150	TRAIN #2, FILTER 5
03-TP-262	FILTERED WATER	6"	FLANGE, FF, #150	TRAIN #2, FILTER 5
03-TP-263	WASTE WATER	6"	FLANGE, FF, #150	TRAIN #2, FILTER 5
03-TP-264	BACKWASH	12"	FLANGE, FF, #150	TRAIN #2, FILTER 5
03-TP-280	INFLUENT	6"	FLANGE, FF, #150	TRAIN #2, FILTER 6
03-TP-281	AIR SCOUR	6"	FLANGE, FF, #150	TRAIN #2, FILTER 6
03-TP-282	FILTERED WATER	6"	FLANGE, FF, #150	TRAIN #2, FILTER 6
03-TP-283	WASTE WATER	6"	FLANGE, FF, #150	TRAIN #2, FILTER 6
03-TP-284	BACKWASH	12"	FLANGE, FF, #150	TRAIN #2, FILTER 6
03-TP-290	OVERFLOW	16"	PLATE FLANGE	TRAIN #2, FILTER 6

SHEET INDEX:

1: GENERAL NOTES & PART LISTS
2: COVER SHEET
3: PLAN VIEW
4: PLAN VIEW - VALVES
5: ELEVATION - NORTH
6: DETAILS - EL. NORTH
7: ELEVATION - SOUTH
8: ELEVATION - EAST
9: ELEVATION - WEST
10: SECTION - INTERNAL
11: SECTION - FILTER CHAMBER
12: DETAIL - RCP PANELS
13: SHIPPING ENVELOPE
14: ANCHORING

FILTER TRAIN
QTY: 1 REQUIRED

NOTES:

ENGINEER'S SEAL

PRELIMINARY
NOT FOR CONSTRUCTION

THE INFORMATION ON THIS DRAWING IS INTENDED FOR CONCEPTUAL DEVELOPMENT, PRELIMINARY DESIGN, OR FOR GUIDANCE ONLY. THIS DOCUMENT SHOULD NOT BE CONSIDERED A FINALIZED PROFESSIONAL WORK PRODUCT.

REV	DESCRIPTION	DATE	BY	CHK	APP
A	ISSUED FOR REVIEW	21-FEB-23	SBW	DE	AEC

REVISIONS

9087A 198 Street Langley, BC Canada V1M 3B1
Phone : 604-638-0760 Fax: 604-638-0795
www.awcsolutions.ca

THIS DRAWING IS THE PROPERTY OF AWC AND CONTAINS PROPRIETARY AND CONFIDENTIAL INFORMATION WHICH MUST NOT BE DUPLICATED, USED OR DISCLOSED OTHER THAN EXPRESSLY AUTHORIZED BY AWC.

CLIENT: CITY & BOROUGH OF WRANGELL
PROJECT: WRANGELL WTP
TITLE: FILTER TRAIN #2 GENERAL ARRANGEMENT DRAWING

SCALE	PROJECTION	DEFAULT UNITS	SHEET SIZE	SHEET
NTS		in	17 x 11	1 OF 14

DRAWING NO. **17805-PI-GAD-320** REV **A**

FILE: M:\Shared\Customers\CRW Engineering\17805 Wrangell AK\5 Engineering\5.13 Piping\5.13.H Diagrams & Dwgs (2D)\5.13.H.1 GAs & Elev Dwgs

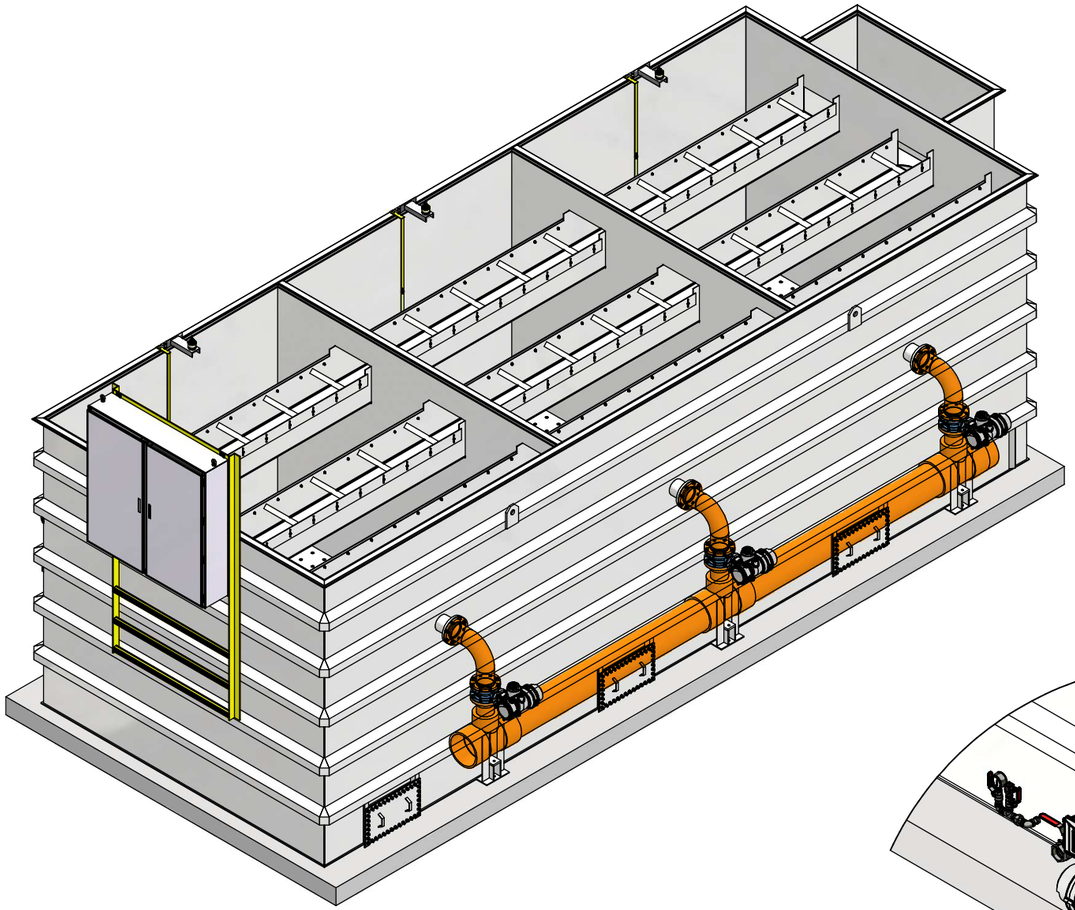

ISO VIEW
FILTER TRAIN #2
INLET PIPING BY OTHERS

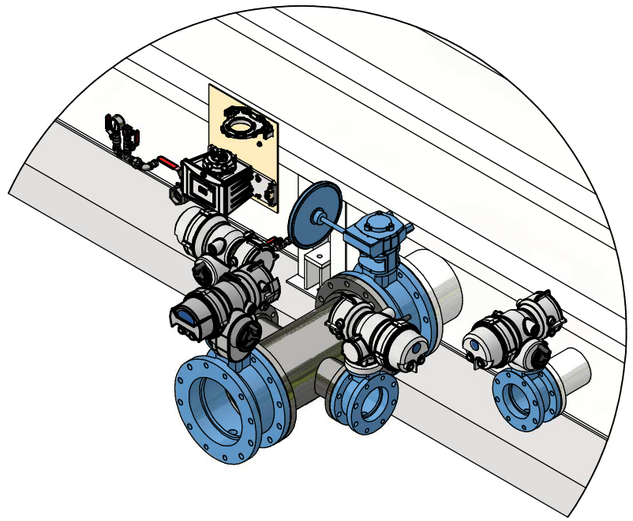

DETAIL A

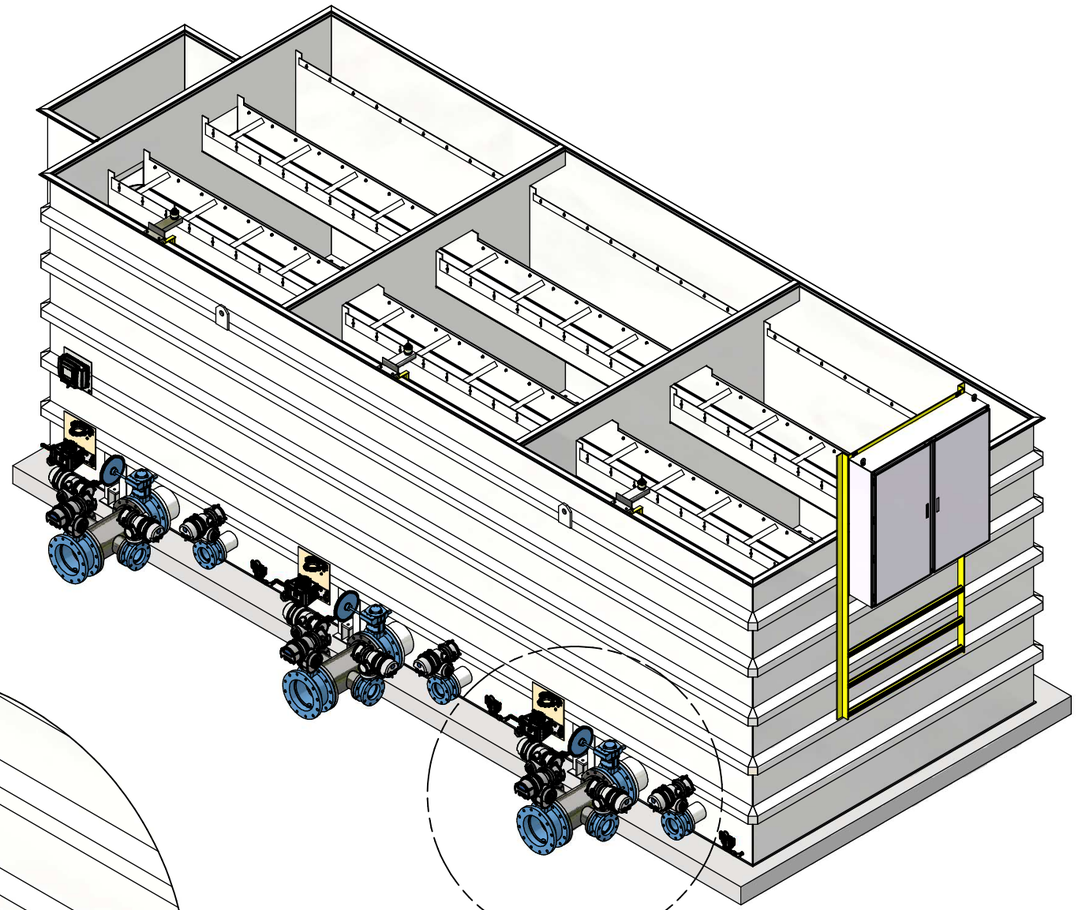

ISO VIEW
FILTER TRAIN #2
EFFLUENT PIPING

NOTES:

ENGINEER'S SEAL

PRELIMINARY
NOT FOR CONSTRUCTION

THE INFORMATION ON THIS DRAWING IS INTENDED FOR CONCEPTUAL DEVELOPMENT, PRELIMINARY DESIGN, OR FOR GUIDANCE ONLY. THIS DOCUMENT SHOULD NOT BE CONSIDERED A FINALIZED PROFESSIONAL WORK PRODUCT.

REV	DESCRIPTION	DATE	BY	CHK	APP
A	ISSUED FOR REVIEW	21-FEB-23	SBW	JE	JC

REVISIONS

9087A 198 Street Langley, BC Canada V1M 3B1
Phone : 604-638-0760 Fax: 604-638-0795
www.awcsolutions.ca

THIS DRAWING IS THE PROPERTY OF AWC AND CONTAINS PROPRIETARY AND CONFIDENTIAL INFORMATION WHICH MUST NOT BE DUPLICATED, USED OR DISCLOSED OTHER THAN EXPRESSLY AUTHORIZED BY AWC.

CLIENT: CITY & BOROUGH OF WRANGELL

PROJECT: WRANGELL WTP

TITLE: FILTER TRAIN #2 GENERAL ARRANGEMENT DRAWING

SCALE	PROJECTION	DEFAULT UNITS	SHEET SIZE	SHEET
NTS		in	17 x 11	2 OF 14

DRAWING NO. **17805-PI-GAD-320** REV **A**

FILE: M:\Shared\Customers\CRW Engineering\17805 Wrangell AK\5 Engineering\5.13 Piping\5.13.H Diagrams & Dwgs (2D)\5.13.H.1 GAs & Elev Dwgs

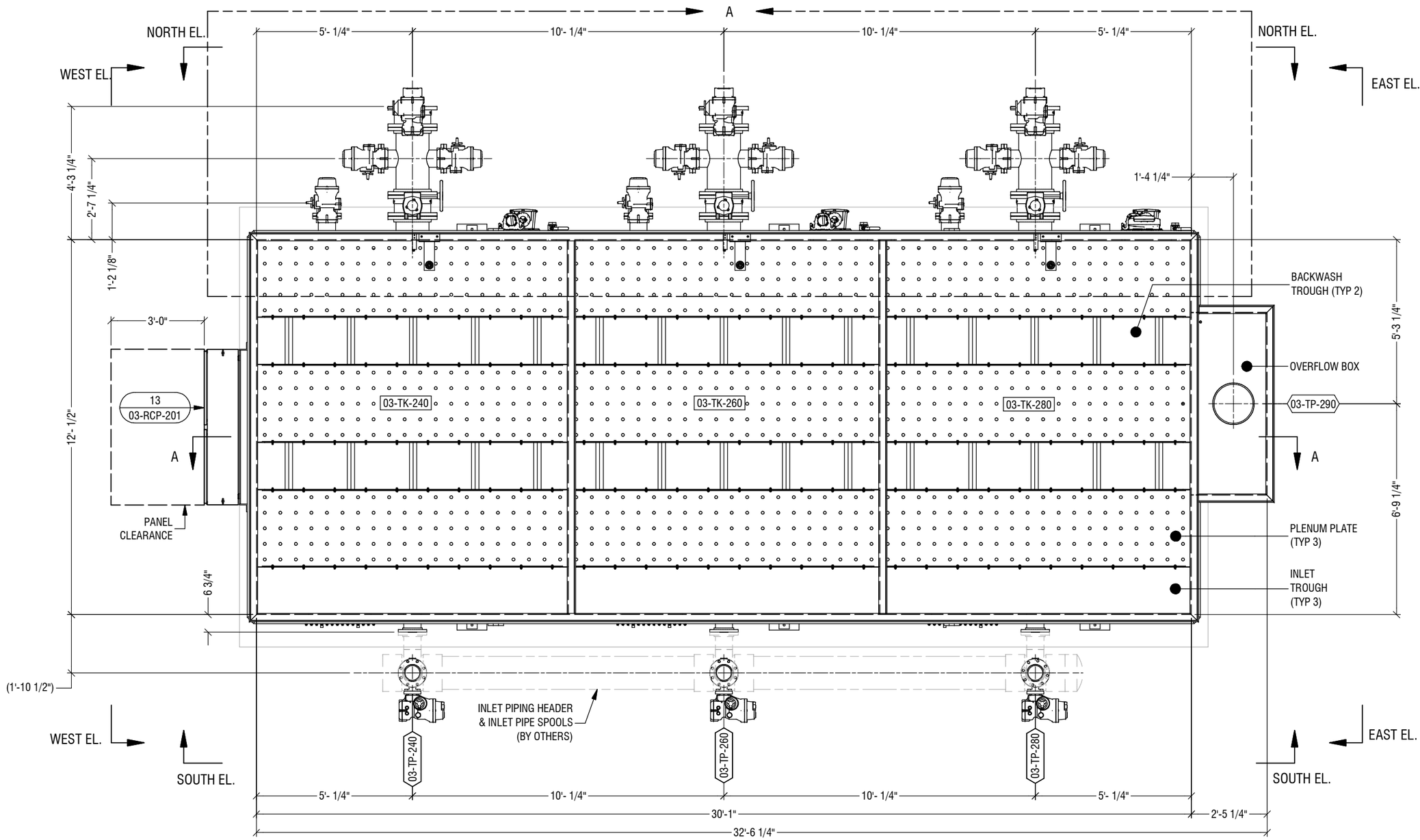

PLAN VIEW

NOTES:

ENGINEER'S SEAL

PRELIMINARY
NOT FOR CONSTRUCTION

THE INFORMATION ON THIS DRAWING IS INTENDED FOR CONCEPTUAL DEVELOPMENT, PRELIMINARY DESIGN, OR FOR GUIDANCE ONLY. THIS DOCUMENT SHOULD NOT BE CONSIDERED A FINALIZED PROFESSIONAL WORK PRODUCT.

REV	DESCRIPTION	DATE	BY	CHK	APP
A	ISSUED FOR REVIEW	21-FEB-23	SRW	JE	JEG

REVISIONS

AWC
9087A 198 Street Langley, BC Canada V1M 3B1
Phone : 604-638-0760 Fax: 604-638-0795
www.awcsolutions.ca

THIS DRAWING IS THE PROPERTY OF AWC AND CONTAINS PROPRIETARY AND CONFIDENTIAL INFORMATION WHICH MUST NOT BE DUPLICATED, USED OR DISCLOSED OTHER THAN EXPRESSLY AUTHORIZED BY AWC.

CLIENT: CITY & BOROUGH OF WRANGELL

PROJECT: WRANGELL WTP

TITLE: FILTER TRAIN #2 GENERAL ARRANGEMENT DRAWING

SCALE	PROJECTION	DEFAULT UNITS	SHEET SIZE	SHEET
NTS		in	17 x 11	3 OF 14

DRAWING NO. **17805-PI-GAD-320** REV **A**

FILE: M:\Shared\Customers\CRW Engineering\17805 Wrangell AK\5 Engineering\5.13 Piping\5.13.H Diagrams & Dwgs (2D)\5.13.H.1 GAs & Elev Dwgs

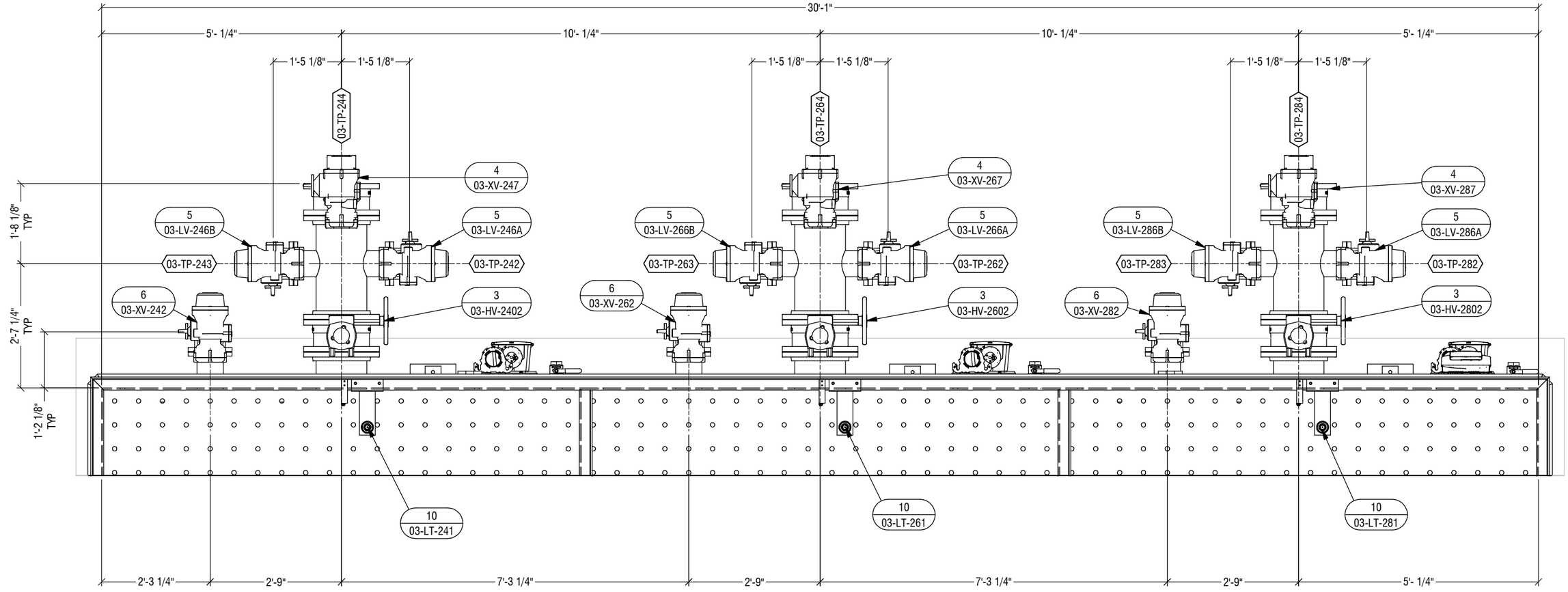

DETAIL A
PLAN VIEW
VALVE DETAILS

NOTES:

ENGINEER'S SEAL

PRELIMINARY
NOT FOR CONSTRUCTION

THE INFORMATION ON THIS DRAWING IS INTENDED FOR CONCEPTUAL DEVELOPMENT, PRELIMINARY DESIGN, OR FOR GUIDANCE ONLY. THIS DOCUMENT SHOULD NOT BE CONSIDERED A FINALIZED PROFESSIONAL WORK PRODUCT.

REV	DESCRIPTION	DATE	BY	CHK	APP
A	ISSUED FOR REVIEW	21-FEB-23	SBW	JE	TG

REVISIONS

9087A 198 Street Langley, BC Canada V1M 3B1
Phone : 604-638-0760 Fax: 604-638-0795
www.awcsolutions.ca

THIS DRAWING IS THE PROPERTY OF AWC AND CONTAINS PROPRIETARY AND CONFIDENTIAL INFORMATION WHICH MUST NOT BE DUPLICATED, USED OR DISCLOSED OTHER THAN EXPRESSLY AUTHORIZED BY AWC.

CLIENT: CITY & BOROUGH OF WRANGELL
PROJECT: WRANGELL WTP
TITLE: FILTER TRAIN #2 GENERAL ARRANGEMENT DRAWING

SCALE	PROJECTION	DEFAULT UNITS	SHEET SIZE	SHEET
NTS		in	17 x 11	4 OF 14

DRAWING NO. **17805-PI-GAD-320** REV **A**

FILE: M:\Shared\Customers\CRW Engineering\17805 Wrangell AK\5 Engineering\5.13 Piping\5.13.H Diagrams & Dwgs (2D)\5.13.H.1 GAs & Elev Dwgs

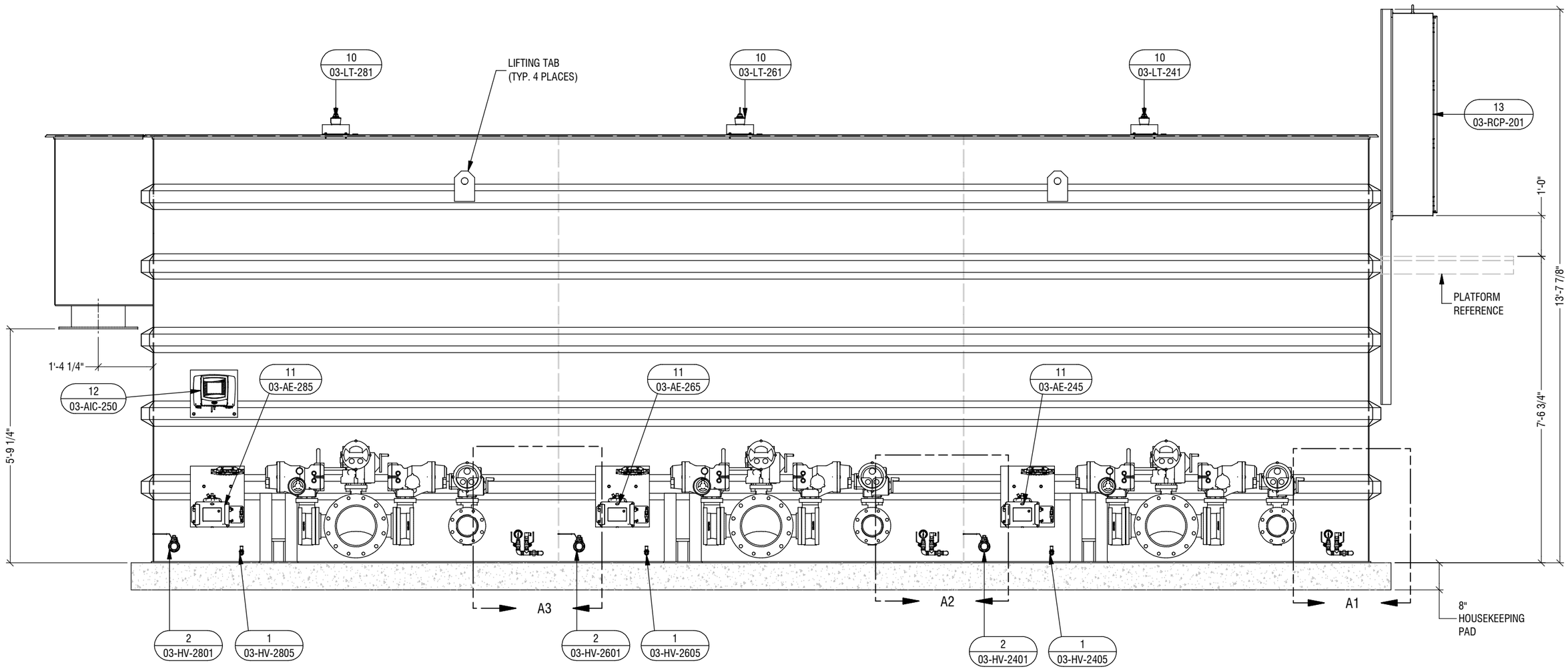

NORTH ELEVATION

NOTES:

ENGINEER'S SEAL

PRELIMINARY
NOT FOR CONSTRUCTION

THE INFORMATION ON THIS DRAWING IS INTENDED FOR CONCEPTUAL DEVELOPMENT, PRELIMINARY DESIGN, OR FOR GUIDANCE ONLY. THIS DOCUMENT SHOULD NOT BE CONSIDERED A FINALIZED PROFESSIONAL WORK PRODUCT.

REV	DESCRIPTION	DATE	BY	CHK	APP
A	ISSUED FOR REVIEW	21-FEB-23	SBW	JE	

REVISIONS

9087A 198 Street Langley, BC Canada V1M 3B1
Phone : 604-638-0760 Fax: 604-638-0795
www.awcsolutions.ca

THIS DRAWING IS THE PROPERTY OF AWC AND CONTAINS PROPRIETARY AND CONFIDENTIAL INFORMATION WHICH MUST NOT BE DUPLICATED, USED OR DISCLOSED OTHER THAN EXPRESSLY AUTHORIZED BY AWC.

CLIENT: CITY & BOROUGH OF WRANGELL

PROJECT: WRANGELL WTP

TITLE: FILTER TRAIN #2 GENERAL ARRANGEMENT DRAWING

SCALE	PROJECTION	DEFAULT UNITS	SHEET SIZE	SHEET
NTS		in	17 x 11	5 OF 14

DRAWING NO. **17805-PI-GAD-320** REV **A**

FILE: M:\Shared\Customers\CRW Engineering\17805 Wrangell AK\5 Engineering\5.13 Piping\5.13.H Diagrams & Dwgs (2D)\5.13.H.1 GAs & Elev Dwgs

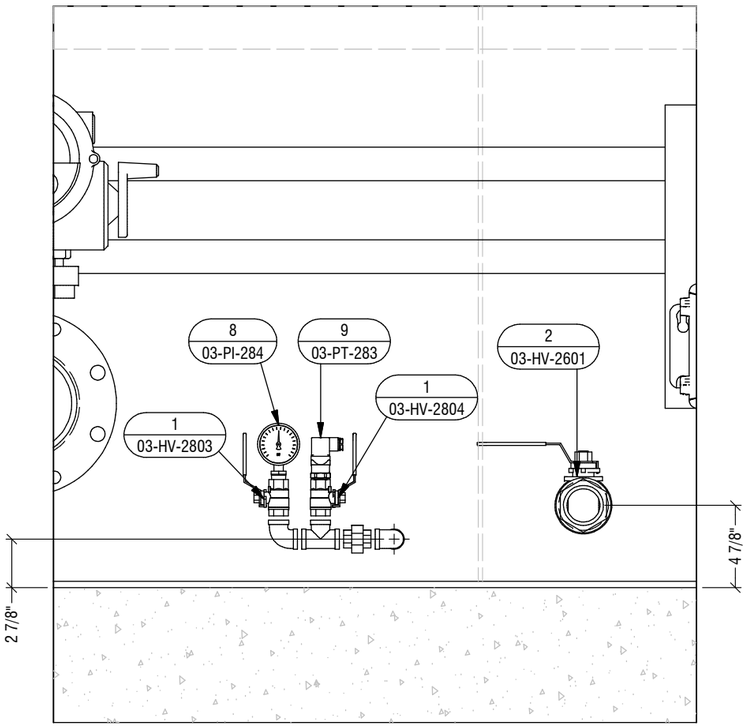

DETAIL A3

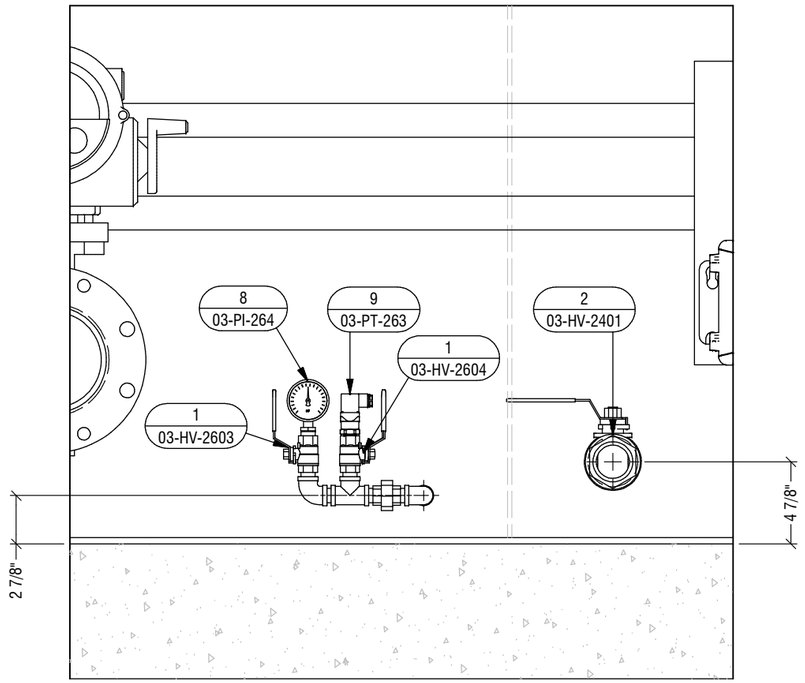

DETAIL A2

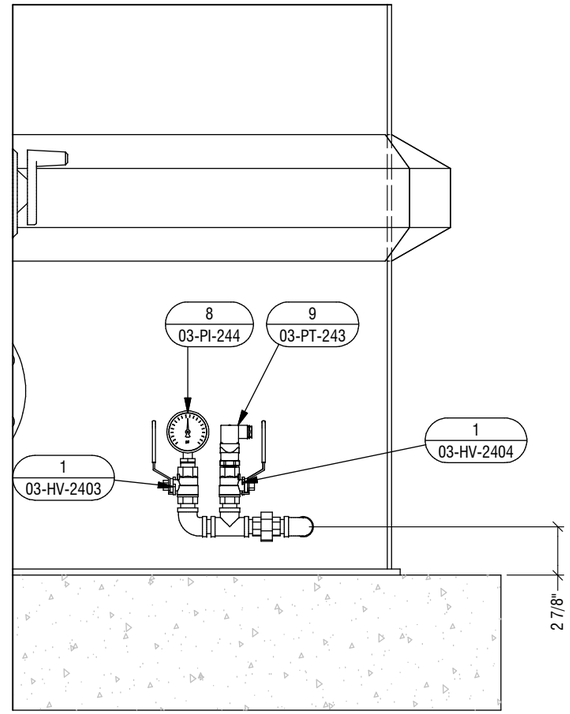

DETAIL A1

NOTES:

ENGINEER'S SEAL

PRELIMINARY
NOT FOR CONSTRUCTION

THE INFORMATION ON THIS DRAWING IS INTENDED FOR CONCEPTUAL DEVELOPMENT, PRELIMINARY DESIGN, OR FOR GUIDANCE ONLY. THIS DOCUMENT SHOULD NOT BE CONSIDERED A FINALIZED PROFESSIONAL WORK PRODUCT.

REV	DESCRIPTION	DATE	BY	CHK	APP
A	ISSUED FOR REVIEW	21-FEB-23	SRW	JE	JAG

REVISIONS

9087A 198 Street Langley, BC Canada V1M 3B1
Phone : 604-638-0760 Fax: 604-638-0795
www.awcsolutions.ca

THIS DRAWING IS THE PROPERTY OF AWC AND CONTAINS PROPRIETARY AND CONFIDENTIAL INFORMATION WHICH MUST NOT BE DUPLICATED, USED OR DISCLOSED OTHER THAN EXPRESSLY AUTHORIZED BY AWC.

CLIENT: CITY & BOROUGH OF WRANGELL

PROJECT: WRANGELL WTP

TITLE: FILTER TRAIN #2 GENERAL ARRANGEMENT DRAWING

SCALE	PROJECTION	DEFAULT UNITS	SHEET SIZE	SHEET
NTS		in	17 x 11	6 OF 14

DRAWING NO. **17805-PI-GAD-320** REV **A**

FILE: M:\Shared\Customers\CRW Engineering\17805 Wrangell AK\5 Engineering\5.13 Piping\5.13.H Diagrams & Dwgs (2D)\5.13.H.1 GAs & Elev Dwgs

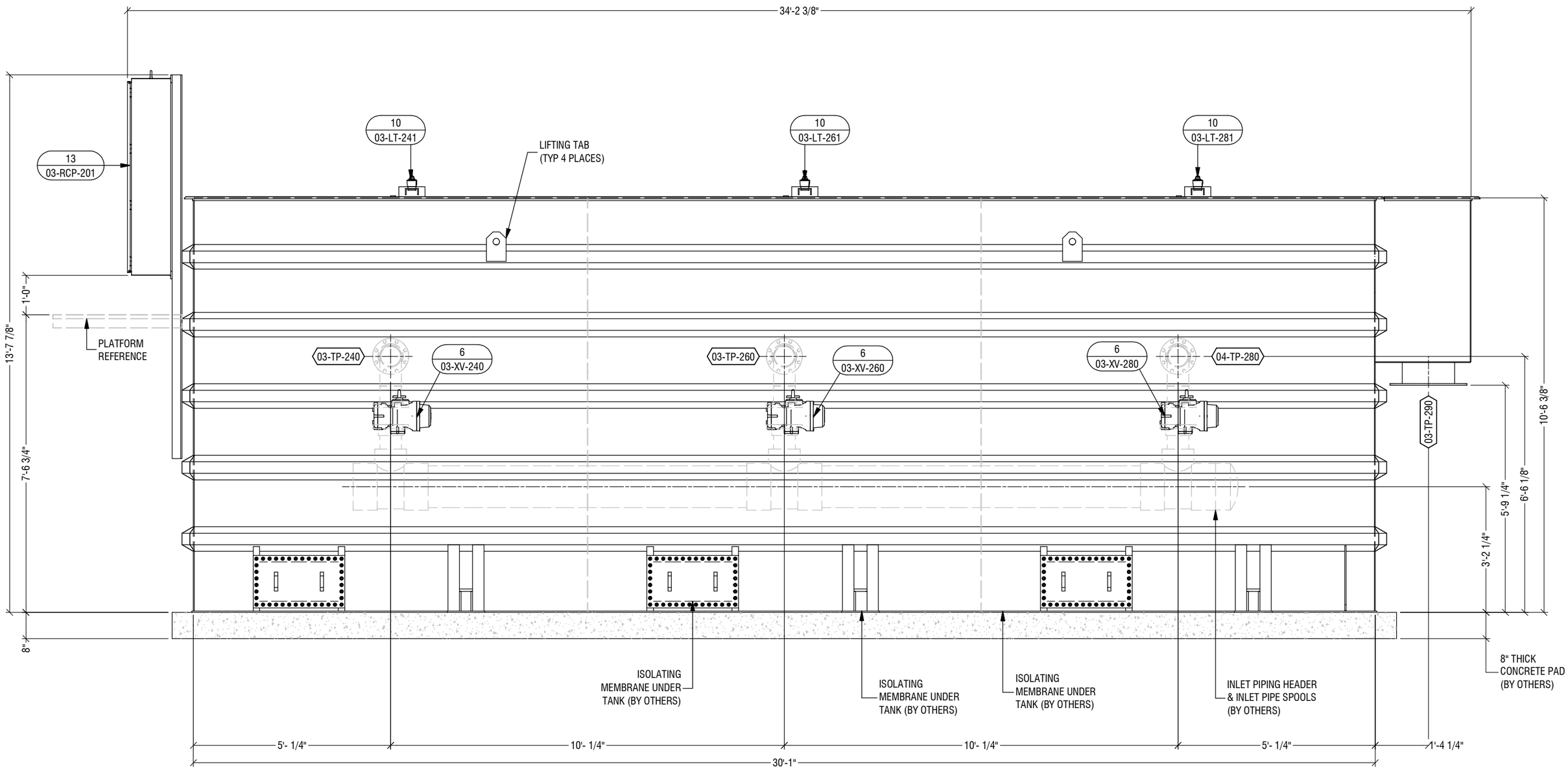

SOUTH ELEVATION

NOTES:

ENGINEER'S SEAL

PRELIMINARY
NOT FOR CONSTRUCTION

THE INFORMATION ON THIS DRAWING IS INTENDED FOR CONCEPTUAL DEVELOPMENT, PRELIMINARY DESIGN, OR FOR GUIDANCE ONLY. THIS DOCUMENT SHOULD NOT BE CONSIDERED A FINALIZED PROFESSIONAL WORK PRODUCT.

REV	DESCRIPTION	DATE	BY	CHK	APP
A	ISSUED FOR REVIEW	21-FEB-23	SBW	JE	JE

REVISIONS

9087A 198 Street Langley, BC Canada V1M 3B1
Phone : 604-638-0760 Fax: 604-638-0795
www.awcsolutions.ca

THIS DRAWING IS THE PROPERTY OF AWC AND CONTAINS PROPRIETARY AND CONFIDENTIAL INFORMATION WHICH MUST NOT BE DUPLICATED, USED OR DISCLOSED OTHER THAN EXPRESSLY AUTHORIZED BY AWC.

CLIENT: CITY & BOROUGH OF WRANGELL

PROJECT: WRANGELL WTP

TITLE: FILTER TRAIN #2 GENERAL ARRANGEMENT DRAWING

SCALE	PROJECTION	DEFAULT UNITS	SHEET SIZE	SHEET
NTS		in	17 x 11	7 OF 14

DRAWING NO. **17805-PI-GAD-320** REV **A**

FILE: M:\Shared\Customers\CRW Engineering\17805 Wrangell AK\5 Engineering\5.13 Piping\5.13.H Diagrams & Dwgs (2D)\5.13.H.1 GAs & Elev Dwgs

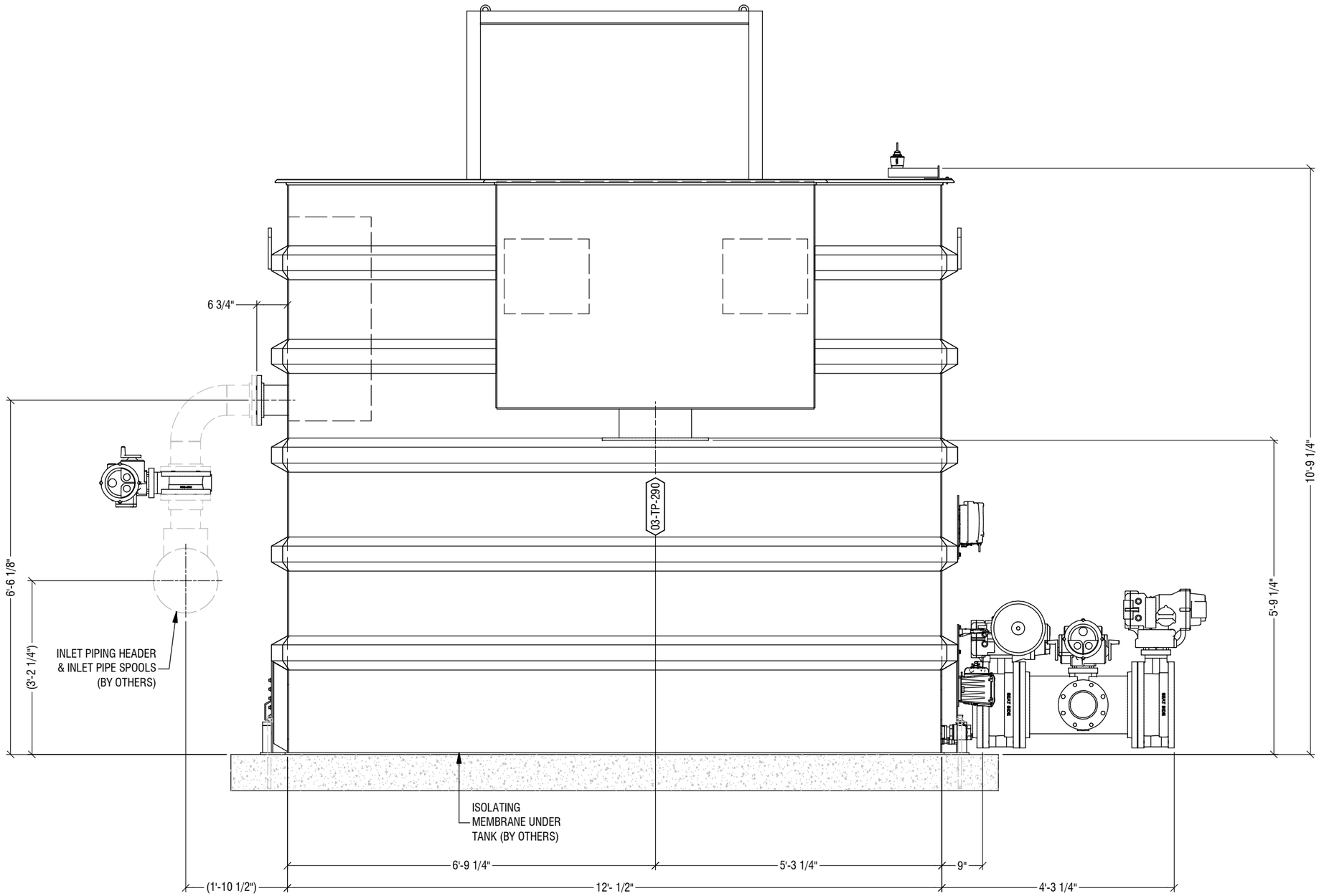

EAST ELEVATION

NOTES:

ENGINEER'S SEAL

PRELIMINARY
NOT FOR CONSTRUCTION

THE INFORMATION ON THIS DRAWING IS INTENDED FOR CONCEPTUAL DEVELOPMENT, PRELIMINARY DESIGN, OR FOR GUIDANCE ONLY. THIS DOCUMENT SHOULD NOT BE CONSIDERED A FINALIZED PROFESSIONAL WORK PRODUCT.

REV	DESCRIPTION	DATE	BY	CHK	APP
A	ISSUED FOR REVIEW	21-FEB-23	SRW	JE	JEG

REVISIONS

9087A 198 Street Langley, BC Canada V1M 3B1
Phone : 604-638-0760 Fax: 604-638-0795
www.awcsolutions.ca

THIS DRAWING IS THE PROPERTY OF AWC AND CONTAINS PROPRIETARY AND CONFIDENTIAL INFORMATION WHICH MUST NOT BE DUPLICATED, USED OR DISCLOSED OTHER THAN EXPRESSLY AUTHORIZED BY AWC.

CLIENT: CITY & BOROUGH OF WRANGELL

PROJECT: WRANGELL WTP

TITLE: FILTER TRAIN #2 GENERAL ARRANGEMENT DRAWING

SCALE	PROJECTION	DEFAULT UNITS	SHEET SIZE	SHEET
NTS		in	17 x 11	8 OF 14

DRAWING NO. **17805-PI-GAD-320** REV **A**

FILE: M:\Shared\Customers\CRW Engineering\17805 Wrangell AK\5 Engineering\5.13 Piping\5.13.H Diagrams & Dwgs (2D)\5.13.H.1 GAs & Elev Dwgs

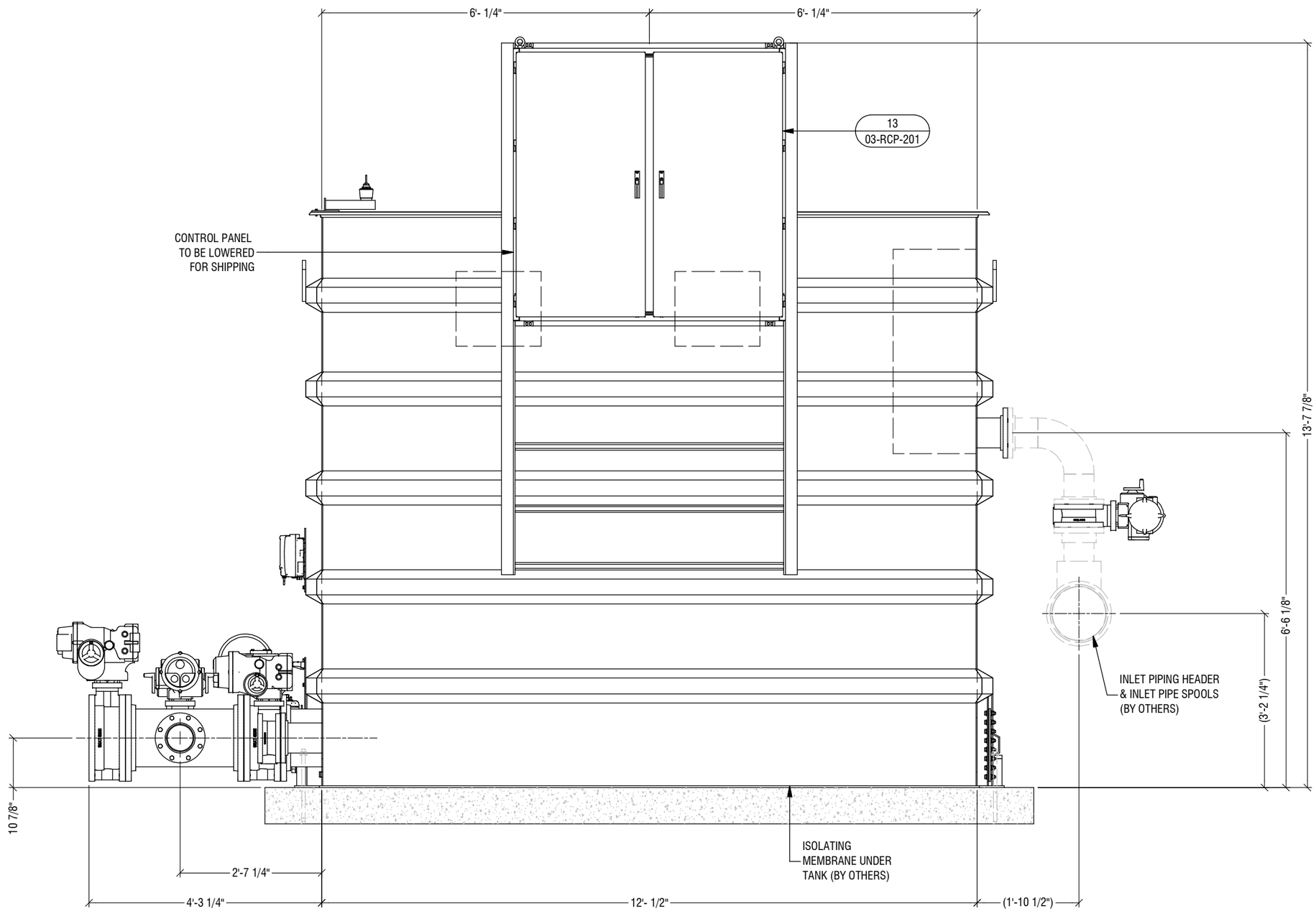

WEST ELEVATION

NOTES:

ENGINEER'S SEAL

PRELIMINARY
NOT FOR CONSTRUCTION

THE INFORMATION ON THIS DRAWING IS INTENDED FOR CONCEPTUAL DEVELOPMENT, PRELIMINARY DESIGN, OR FOR GUIDANCE ONLY. THIS DOCUMENT SHOULD NOT BE CONSIDERED A FINALIZED PROFESSIONAL WORK PRODUCT.

REV	DESCRIPTION	DATE	BY	CHK	APP
A	ISSUED FOR REVIEW	21-FEB-23	SRW	JE	JEG

REVISIONS

9087A 198 Street Langley, BC Canada V1M 3B1
Phone : 604-638-0760 Fax: 604-638-0795
www.awcsolutions.ca

THIS DRAWING IS THE PROPERTY OF AWC AND CONTAINS PROPRIETARY AND CONFIDENTIAL INFORMATION WHICH MUST NOT BE DUPLICATED, USED OR DISCLOSED OTHER THAN EXPRESSLY AUTHORIZED BY AWC.

CLIENT: CITY & BOROUGH OF WRANGELL

PROJECT: WRANGELL WTP

TITLE: FILTER TRAIN #2 GENERAL ARRANGEMENT DRAWING

SCALE	PROJECTION	DEFAULT UNITS	SHEET SIZE	SHEET
NTS		in	17 x 11	9 OF 14

DRAWING NO. **17805-PI-GAD-320** REV **A**

FILE: M:\Shared\Customers\CRW Engineering\17805 Wrangell AK\5 Engineering\5.13 Piping\5.13.H Diagrams & Dwgs (2D)\5.13.H.1 GAs & Elev Dwgs

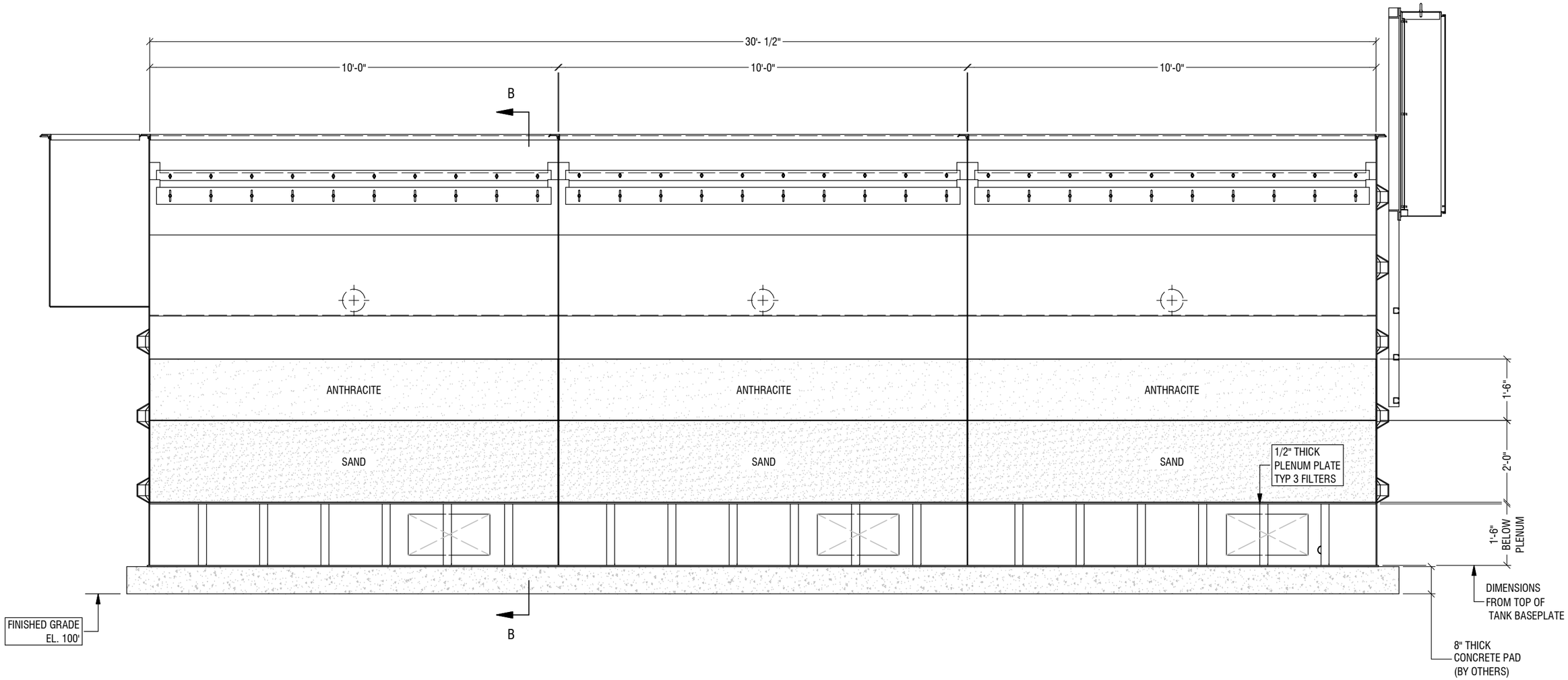

SECTION A-A

NOTES:

ENGINEER'S SEAL

PRELIMINARY
NOT FOR CONSTRUCTION

THE INFORMATION ON THIS DRAWING IS INTENDED FOR CONCEPTUAL DEVELOPMENT, PRELIMINARY DESIGN, OR FOR GUIDANCE ONLY. THIS DOCUMENT SHOULD NOT BE CONSIDERED A FINALIZED PROFESSIONAL WORK PRODUCT.

REV	DESCRIPTION	DATE	BY	CHK	APP
A	ISSUED FOR REVIEW	21-FEB-23	SBW	JE	

REVISIONS

9087A 198 Street Langley, BC Canada V1M 3B1
Phone : 604-638-0760 Fax: 604-638-0795
www.awcsolutions.ca

THIS DRAWING IS THE PROPERTY OF AWC AND CONTAINS PROPRIETARY AND CONFIDENTIAL INFORMATION WHICH MUST NOT BE DUPLICATED, USED OR DISCLOSED OTHER THAN EXPRESSLY AUTHORIZED BY AWC.

CLIENT: CITY & BOROUGH OF WRANGELL

PROJECT: WRANGELL WTP

TITLE: FILTER TRAIN #2 GENERAL ARRANGEMENT DRAWING

SCALE	PROJECTION	DEFAULT UNITS	SHEET SIZE	SHEET
NTS		in	17 x 11	10 OF 14

DRAWING NO. **17805-PI-GAD-320** REV **A**

FILE: M:\Shared\Customers\CRW Engineering\17805 Wrangell AK\5 Engineering\5.13 Piping\5.13.H Diagrams & Dwgs (2D)\5.13.H.1 GAs & Elev Dwgs

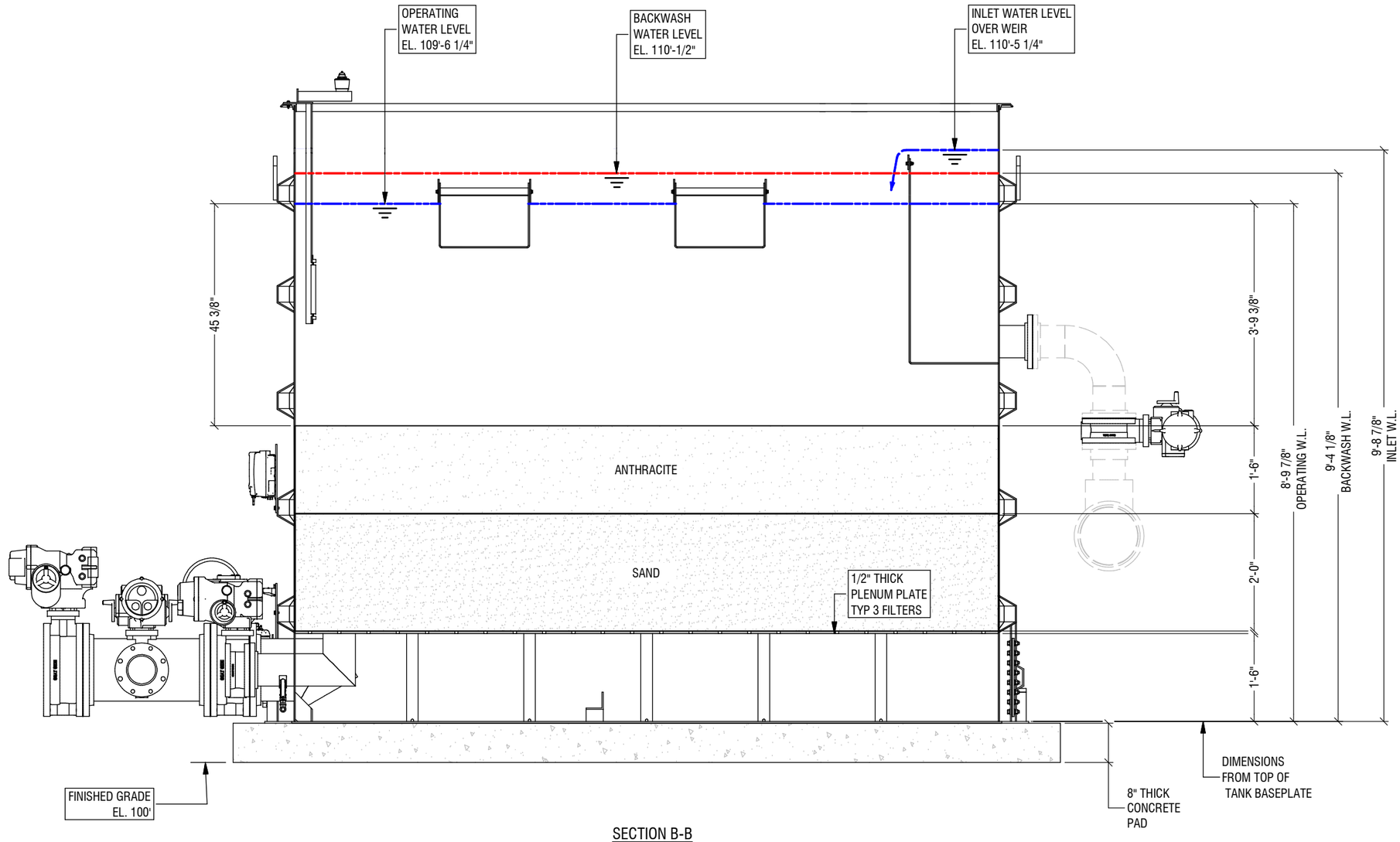

SECTION B-B

NOTES:

ENGINEER'S SEAL

PRELIMINARY
NOT FOR CONSTRUCTION

THE INFORMATION ON THIS DRAWING IS INTENDED FOR CONCEPTUAL DEVELOPMENT, PRELIMINARY DESIGN, OR FOR GUIDANCE ONLY. THIS DOCUMENT SHOULD NOT BE CONSIDERED A FINALIZED PROFESSIONAL WORK PRODUCT.

REV	DESCRIPTION	DATE	BY	CHK	APP
A	ISSUED FOR REVIEW	21-FEB-23	SBW	JE	EG

REVISIONS

9087A 198 Street Langley, BC Canada V1M 3B1
Phone : 604-638-0760 Fax: 604-638-0795
www.awcsolutions.ca

THIS DRAWING IS THE PROPERTY OF AWC AND CONTAINS PROPRIETARY AND CONFIDENTIAL INFORMATION WHICH MUST NOT BE DUPLICATED, USED OR DISCLOSED OTHER THAN EXPRESSLY AUTHORIZED BY AWC.

CLIENT: CITY & BOROUGH OF WRANGELL

PROJECT: WRANGELL WTP

TITLE: FILTER TRAIN #2 GENERAL ARRANGEMENT DRAWING

SCALE	PROJECTION	DEFAULT UNITS	SHEET SIZE	SHEET
NTS		in	17 x 11	11 OF 14

DRAWING NO. **17805-PI-GAD-320** REV **A**

FILE: M:\Shared\Customers\CRW Engineering\17805 Wrangell AK\5 Engineering\5.13 Piping\5.13.H Diagrams & Dwgs (2D)\5.13.H.1 GAs & Elev Dwgs

RCP PANEL INSTALLATION

LOWERED POSITION FOR SHIPPING
THEN RAISE INTO PLACE AT SITE

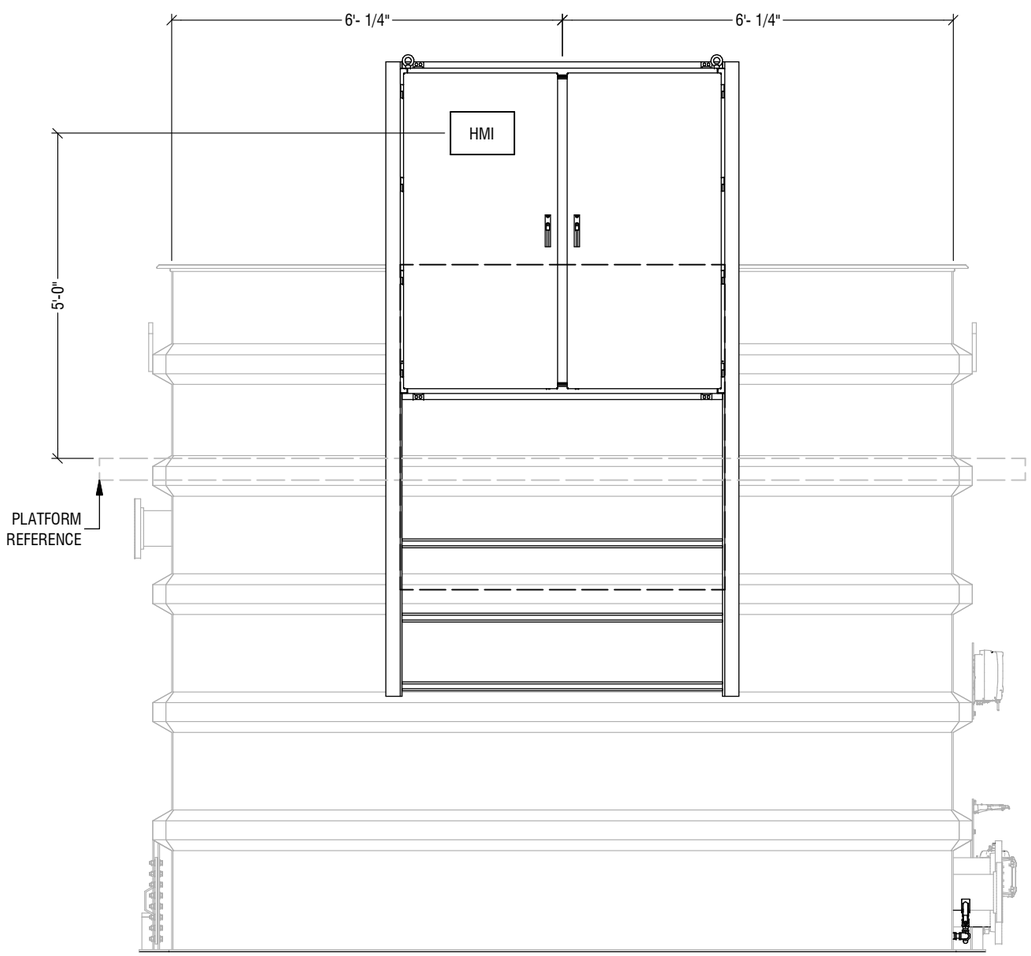

WEST ELEVATION

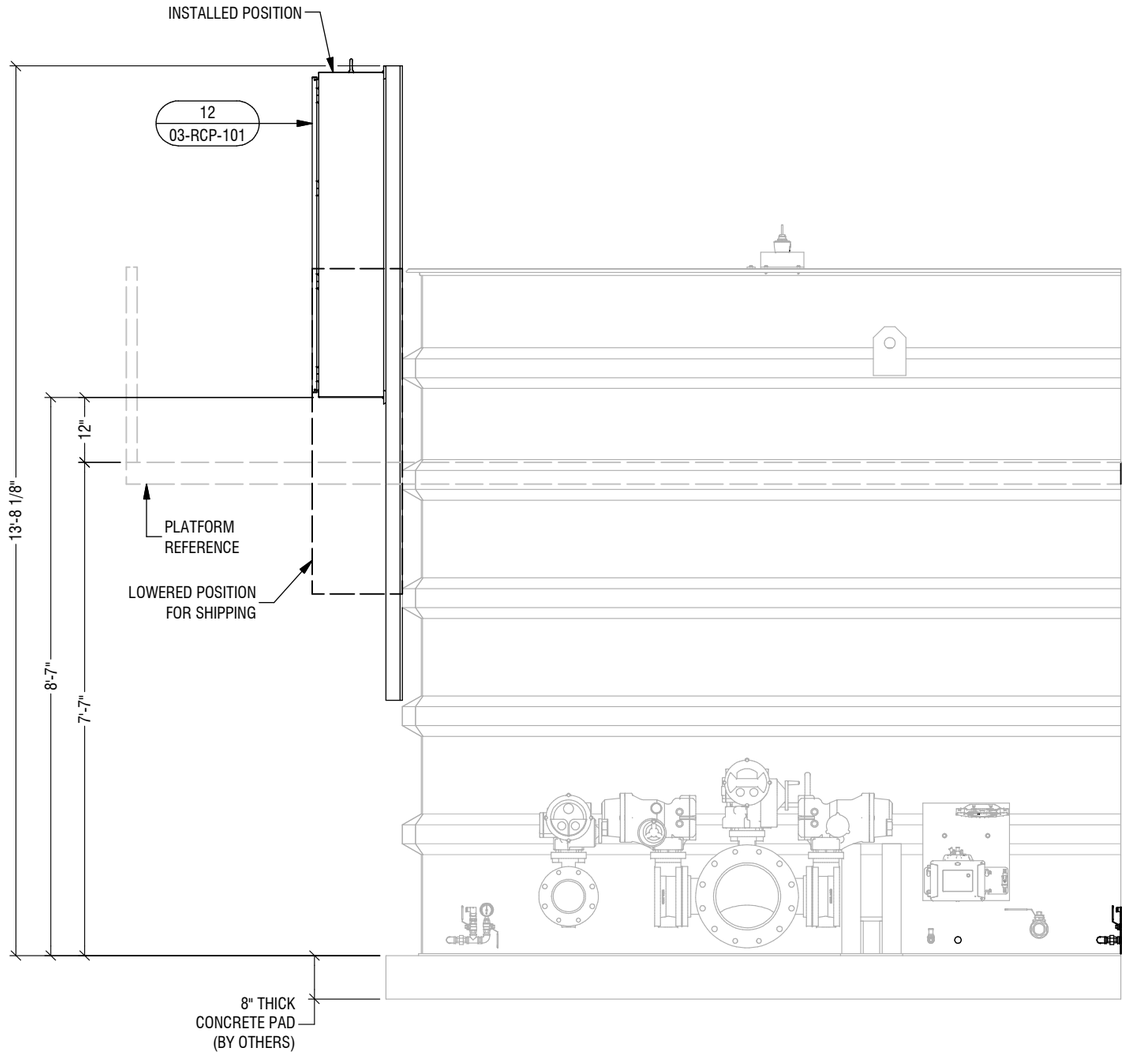

SOUTH ELEVATION
(EFFLUENT SIDE)

NOTES:

ENGINEER'S SEAL

PRELIMINARY
NOT FOR CONSTRUCTION

THE INFORMATION ON THIS DRAWING IS INTENDED FOR CONCEPTUAL DEVELOPMENT, PRELIMINARY DESIGN, OR FOR GUIDANCE ONLY. THIS DOCUMENT SHOULD NOT BE CONSIDERED A FINALIZED PROFESSIONAL WORK PRODUCT.

REV	DESCRIPTION	DATE	BY	CHK	APP
A	ISSUED FOR REVIEW	21-FEB-23	SRW	JE	

REVISIONS

9087A 198 Street Langley, BC Canada V1M 3B1
Phone : 604-638-0760 Fax: 604-638-0795
www.awcsolutions.ca

THIS DRAWING IS THE PROPERTY OF AWC AND CONTAINS PROPRIETARY AND CONFIDENTIAL INFORMATION WHICH MUST NOT BE DUPLICATED, USED OR DISCLOSED OTHER THAN EXPRESSLY AUTHORIZED BY AWC.

CLIENT: CITY & BOROUGH OF WRANGELL
PROJECT: WRANGELL WTP
TITLE: FILTER TRAIN #2 GENERAL ARRANGEMENT DRAWING

SCALE	PROJECTION	DEFAULT UNITS	SHEET SIZE	SHEET
NTS		in	17 x 11	12 OF 14

DRAWING NO. **17805-PI-GAD-320** REV **A**

FILE: M:\Shared\Customers\CRW Engineering\17805 Wrangell AK\5 Engineering\5.13 Piping\5.13.H Diagrams & Dwgs (2D)\5.13.H.1 GAs & Elev Dwgs

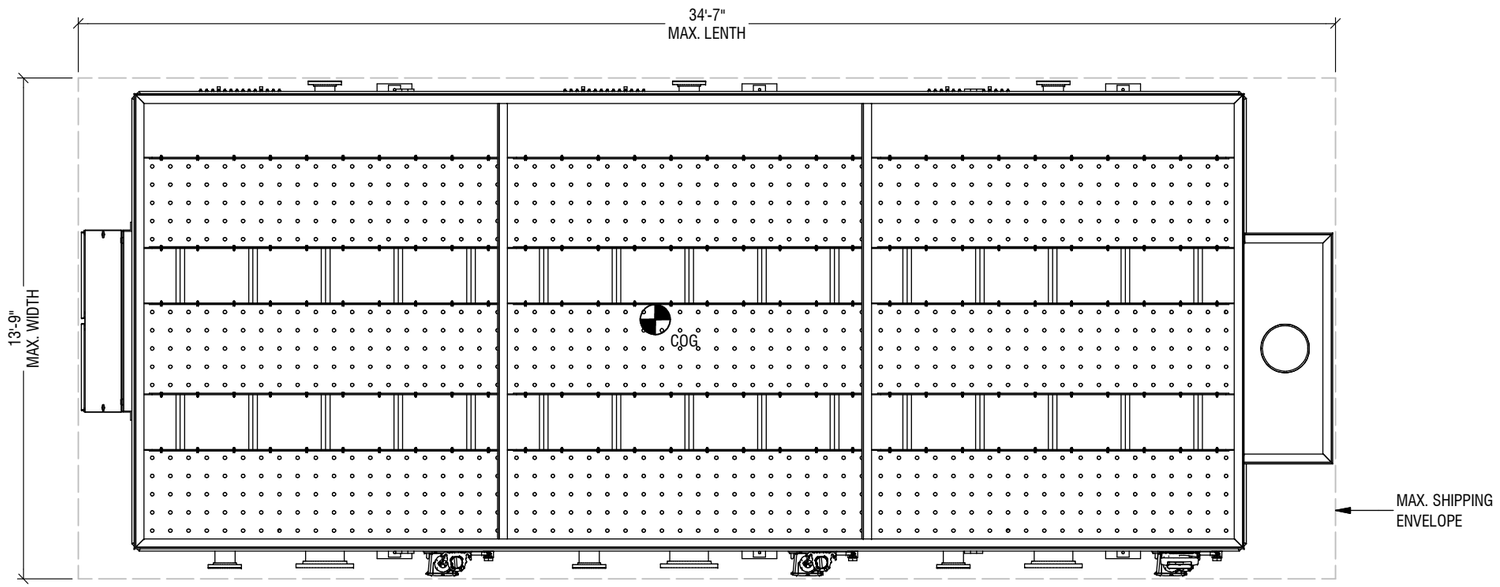

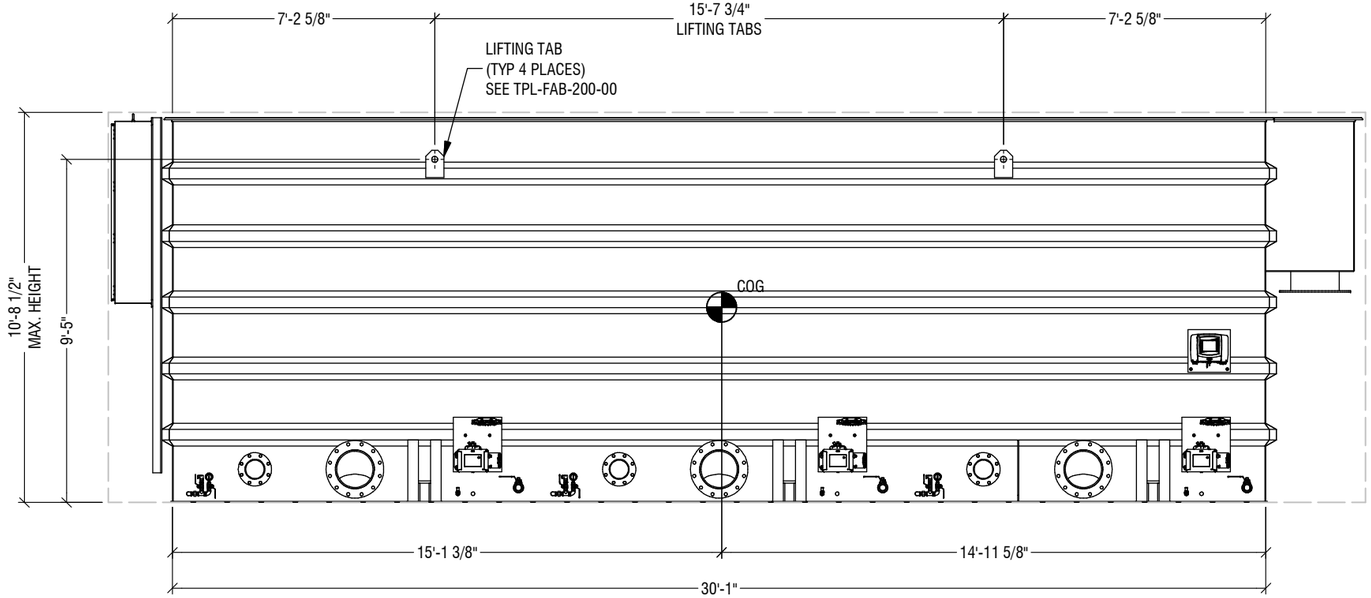

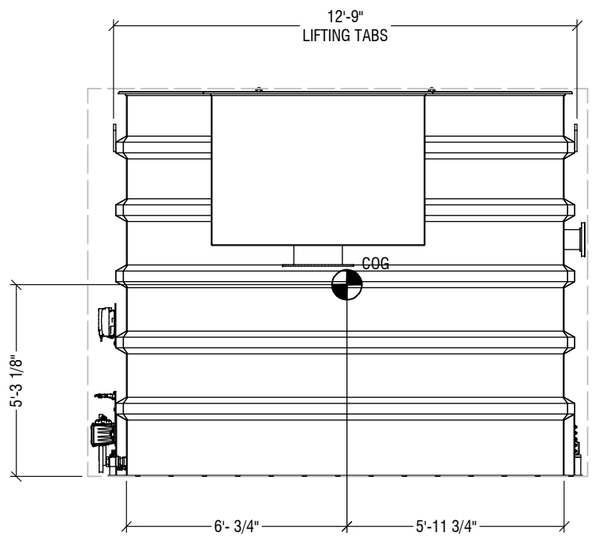

NOTES:

1. SEE COVER SHEET FOR ESTIMATED WEIGHTS.

ENGINEER'S SEAL

PRELIMINARY
NOT FOR CONSTRUCTION

THE INFORMATION ON THIS DRAWING IS INTENDED FOR CONCEPTUAL DEVELOPMENT, PRELIMINARY DESIGN, OR FOR GUIDANCE ONLY. THIS DOCUMENT SHOULD NOT BE CONSIDERED A FINALIZED PROFESSIONAL WORK PRODUCT.

REV	DESCRIPTION	DATE	BY	CHK	APP
A	ISSUED FOR REVIEW	21-FEB-23	SBW	JE	JE

REVISIONS

9087A 198 Street Langley, BC Canada V1M 3B1
Phone : 604-638-0760 Fax: 604-638-0795
www.awcsolutions.ca

THIS DRAWING IS THE PROPERTY OF AWC AND CONTAINS PROPRIETARY AND CONFIDENTIAL INFORMATION WHICH MUST NOT BE DUPLICATED, USED OR DISCLOSED OTHER THAN EXPRESSLY AUTHORIZED BY AWC.

CLIENT: CITY & BOROUGH OF WRANGELL

PROJECT: WRANGELL WTP

TITLE: FILTER TRAIN #2 GENERAL ARRANGEMENT DRAWING

SCALE	PROJECTION	DEFAULT UNITS	SHEET SIZE	SHEET
NTS		in	17 x 11	13 OF 14

DRAWING NO. **17805-PI-GAD-320** REV **A**

FILE: M:\Shared\Customers\CRW Engineering\17805 Wrangell AK\5 Engineering\5.13 Piping\5.13.H Diagrams & Dwgs (2D)\5.13.H.1 GAs & Elev Dwgs

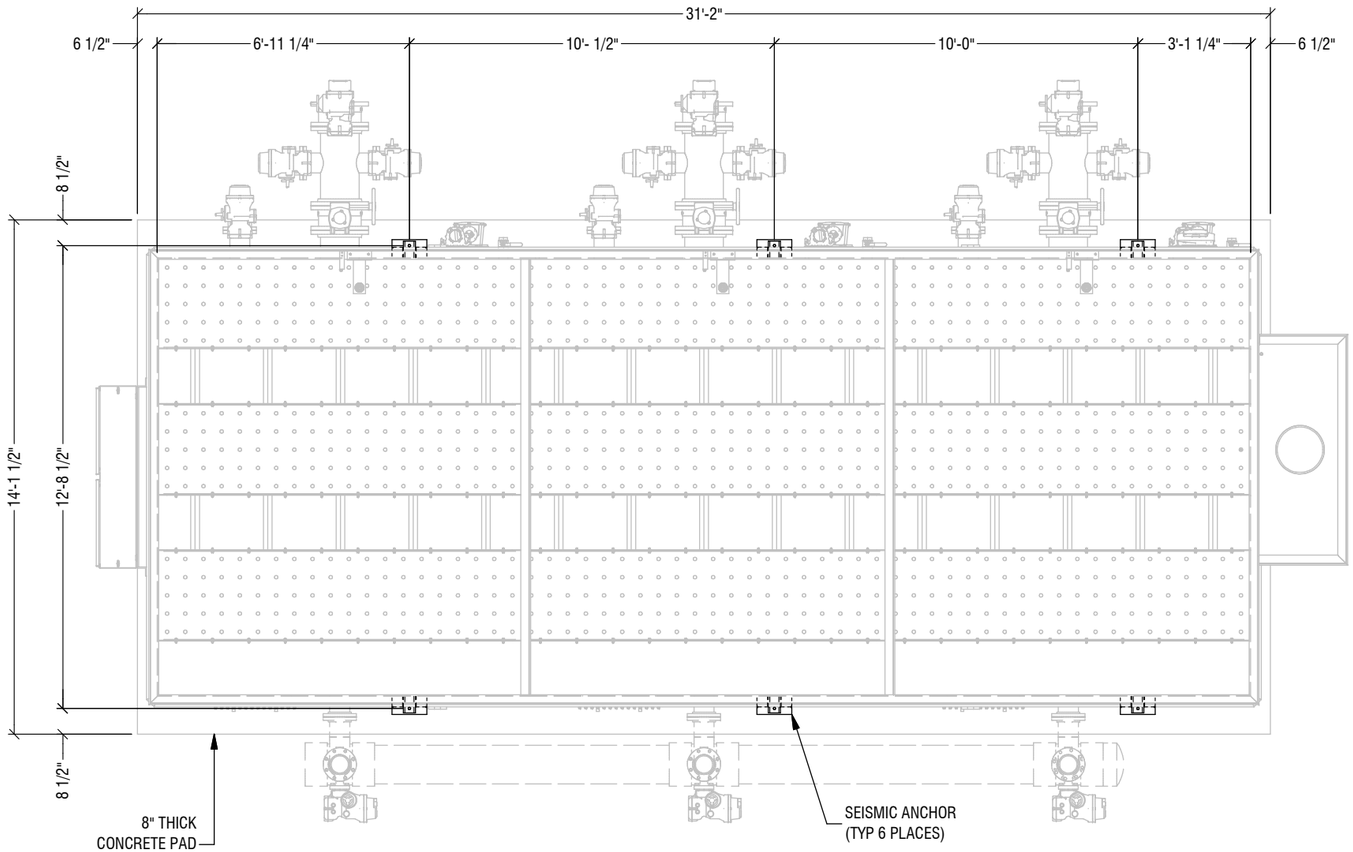

FILTER 2 LAYOUT

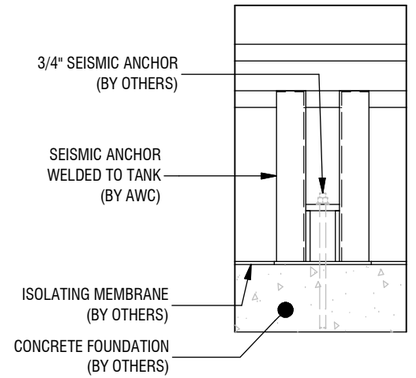

SEISMIC ANCHOR DETAIL
ELEVATION VIEW

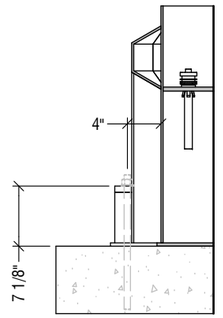

SEISMIC ANCHOR DETAIL
SIDE VIEW

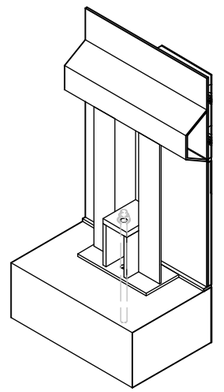

ISO VIEW

NOTES:

ENGINEER'S SEAL

PRELIMINARY
NOT FOR CONSTRUCTION

THE INFORMATION ON THIS DRAWING IS INTENDED FOR CONCEPTUAL DEVELOPMENT, PRELIMINARY DESIGN, OR FOR GUIDANCE ONLY. THIS DOCUMENT SHOULD NOT BE CONSIDERED A FINALIZED PROFESSIONAL WORK PRODUCT.

REV	DESCRIPTION	DATE	BY	CHK	APP
A	ISSUED FOR REVIEW	21-FEB-23	SRW	JE	

REVISIONS

9087A 198 Street Langley, BC Canada V1M 3B1
Phone : 604-638-0760 Fax: 604-638-0795
www.awcsolutions.ca

THIS DRAWING IS THE PROPERTY OF AWC AND CONTAINS PROPRIETARY AND CONFIDENTIAL INFORMATION WHICH MUST NOT BE DUPLICATED, USED OR DISCLOSED OTHER THAN EXPRESSLY AUTHORIZED BY AWC.

CLIENT	CITY & BOROUGH OF WRANGELL
PROJECT	WRANGELL WTP
TITLE	FILTER TRAIN #2 GENERAL ARRANGEMENT DRAWING

SCALE	PROJECTION	DEFAULT UNITS	SHEET SIZE	SHEET
NTS		in	17 x 11	14 OF 14

DRAWING NO. **17805-PI-GAD-320** REV **A**

FILE: M:\Shared\Customers\CRW Engineering\17805 Wrangell AK\5 Engineering\5.13 Piping\5.13.H Diagrams & Dwgs (2D)\5.13.H.1 GAs & Elev Dwgs

REFERENCE DRAWINGS

1. P&ID: 17805-PR-PID-001
2. PLANT LAYOUT: 17805-PI-LAY-001
3. PLATFORM & STAIR GENERAL ARRANGEMENT: 17805-PI-GAD-900
4. STANDARD LIFTING DETAILS: TPL-FAB-200-00 (ALUM)

GENERAL

1. DIMENSIONS ARE SHOWN IN INCHES (FT-IN) UNLESS STATED OTHERWISE
2. TOLERANCES:
   TANK DIMENSIONS: +/- 1/4 in
   NOZZLE LOCATIONS: +/- 1/4 in
3. AWC PROVIDES CATHODIC PROTECTION FOR ALL ALUMINUM TANKS.

ENGINEERING, STANDARDS & SPECIFICATION

1. AWC WILL PERFORM SEISMIC ANCHOR SIZING AS PER THE SPECIFICATIONS AND APPLICABLE GOVERNING CODES AND STANDARDS.
2. AWC WILL PROVIDE STAMPED ANCHOR DETAILS SHOWING THE REQUIRED REACTION FORCES INCLUDING THE ANCHOR BOLT SIZE, MATERIAL, AND GRADE.
3. ALL CALCULATIONS AND DESIGN RELATED TO CONCRETE INCLUDING STRENGTH, ANCHOR BOLT EMBEDMENT DEPTH, AND EPOXY SELECTION BY OTHERS.
4. STRUCTURAL DESIGN BY AWC WILL BE AUTHENTICATED BY A 3RD PARTY STRUCTURAL ENGINEER REGISTERED IN THE STATE OF ALASKA, USA. ISSUED FOR CONSTRUCTION (IFC) ONLY.
5. ALL TANK, SKID, PLATFORM & STAIR WELDING TO CONFORM TO CSA W47.1 (STEEL, OR CSA W47.2 (ALUMINUM).
6. ALL WELDED PIPE SPOOLS TO CONFORM TO ASME B31.3.

MATERIALS

1. ALL STRUCTURAL MEMBERS TO BE ALUMINUM 6061-T6
2. ALL PIPING 1/2" - 2" TO BE SCHEDULE 40S, 2 1/2" - 4" TO BE SCHEDULE 10S 304/304L STAINLESS STEEL UNLESS STATED OTHERWISE.
3. ALL HARDWARE TO BE ASTM F593, 18-8 SS
4. GASKETS TO BE 1/8" THICK EPDM.

FINISH

1. ALL WELDS TO BE CLEANED USING A STAINLESS STEEL WIRE BRUSH.
2. ALL WELDED SS WATER SERVICE PIPING TO BE PICKLED & PASSIVATED AS PER ASTM A967-A967M-17 AND ASTM A380 / A380M-17 USING AVESTA RED ONE 240.

TESTING

1. ALL WELDS TO BE VISUALLY INSPECTED FOR DEFECTS.
2. ALL PIPING TO BE HYDROTESTED TO ASME B31.3 STANDARDS.
3. ALL PIPING WELDS TO BE RADIOGRAPHIC TESTED TO A MINIMUM OF 5% AS PER ASME B31.3.

ELECTRICAL

1. MINIMUM 3FT OF CLEARANCE REQUIRED IN FRONT OF ANY ELECTRICAL PANEL / JUNCTION BOX.

INSTALLATION

1. ISOLATION MEMBRANE IS REQUIRED BETWEEN THE CONCRETE PAD AND THE BOTTOM OF THE SKID(S) FRAME. MEMBRANE TO BE SUPPLIED AND INSTALLED BY OTHERS. THE RECOMMENDED LAYOUT DIMENSIONS CAN BE FOUND ON 17805-PI-LAY-001
2. SUPPLY AND INSTALLATION OF SEISMIC ANCHOR BOLTS BY OTHERS.
3. ANY INTERCONNECTING PIPING BETWEEN AWC'S EQUIPMENT AND THE WTP TO BE DESIGNED, SUPPLIED & INSTALLED BY OTHERS.
4. SKID PIPING SHALL NOT BE SUBJECTED TO EXTERNAL PIPING FORCES AND MOMENTS. ZERO LOADING WILL BE ACCEPTED.

SHIPPED LOOSE ITEMS

1. SEE NOTES ON PROJECT PIPING AND INSTRUMENT DIAGRAM (17805-PR-PID-001) FOR VALVE STEM EXTENSIONS OR CHAIN WHEEL ACTUATORS, IF APPLICABLE. IF NO NOTE IS PROVIDED ON THE P&ID, THE VALVE WILL BE SHIPPED WITH A SUPPLIER STANDARD ACTUATOR OR HANDLE

ESTIMATED WEIGHTS (W/ EQUIPMENT)

1. RECYCLE SKID ASSEMBLY
   DRY WEIGHT (FULLY ASSEMBLED) 3000 LBS
   OPERATING WEIGHT (WITH WATER) 3800 LBS

2. SATURATOR
   DRY WEIGHT (FULLY ASSEMBLED) 1900 LBS
   OPERATING WEIGHT (WITH WATER) 2700 LBS

LEGEND

- BY AWC
- BY OTHERS
- FUTURE
- 10 / HV-01 — ITEM NUMBER / P&ID TAG NUMBER
- TP-01 — P&ID TIE POINT NUMBER

PARTS LIST

ITEM	QTY	DESCRIPTION	SIZE (in)	MATERIAL	MANUFACTURER	MODEL #
1	1	SATURATOR VESSEL	24" X 90"	CS	KOOTENAY	-
2	1	PUMP	7.5 HP	C.I.	GRUNDFOS	CR 15-4 A-GJ-A-E-HQQE
3	1	CHECK VALVE	1/2"	BRASS	MA STEWART	MAS-700
4	10	BALL VALVE, FNPT	1/2"	316 SS	MA STEWART	G2E
5	2	BALL VALVE, FNPT	1/4"	316 SS	MA STEWART	G2E
6	1	BUTTERFLY VALVE, HANDWHEEL	3"	C.I.	DeZURIK	BAW
7	1	BUTTERFLY VALVE, ON/OFF	4"	C.I.	DeZURIK / ROTORK	BAW/IQT250FA10
8	1	BALL VALVE, FNPT	2"	316 SS	MA STEWART	G2E
9	1	WAFER CHECK VALVE	3"	C.I.	DeZURIK	CSC,3,300A,W1W2,DI,S2-NBR
10	1	PRESSURE RELIEF VALVE	1/2" X 3/4"	BRASS	KUNKLE	6010DCM01-KM0120
11	1	SOLENOID VALVE	1/2"	BRASS	ASCO	8821
13	2	PRESSURE TRANSMITTER, 0-100 KPA	1/4"	SS	WIKA	A10
12	1	AIR PRESSURE REGULATOR	1/2"	ALUMINUM	SMC	AR40-N04G-Z 1/2"
14	1	DIFFERENTIAL PRESSURE TRANSMITTER	1/2"	316 SS	ENDRESS + HAUSER	PMD75-ACC7FK1DJAALRZ1
15	1	PRESSURE GAUGE, 2-1/2" DIAL, -15-30PSI	1/4"	316 SS	WIKA	213.53
16	2	PRESSURE GAUGE, 2-1/2" DIAL, 0-160PSI	1/4"	316 SS	WIKA	213.53
17	1	MAGNETIC FLOW METER	2"	304 SS	ENDRESS + HAUSER	5W4C50-C6ELHM0DUA1K0B +AAL4Z1
18	1	SIGHT GLASS	1"	316 SS	JOHN C. ERNST	441-04-12CC-505-VIT-839A
19	1	JUNCTION BOX	10 X 8 X 4	POLYESTER	HOFFMAN	A1084PHC
20	1	DISCONNECT SWITCH	-	-	ABB	EOT32U3P4-P

TIE POINT SCHEDULE

ITEM	DESCRIPTION	SIZE (in)	TYPE
02-TP-120	RECYCLE SUPPLY	4"	150# FF FLANGE
02-TP-125	PSV DISCHARGE	3/4"	FNPT
02-TP-126	COMPRESSOR AIR SUPPLY	1/2"	FNPT
02-TP-127	RECYCLE RETURN	4"	150 # FF FLANGE

SHEET INDEX:

1: GENERAL NOTES & PART LIST
2: ISO VIEW
3: PLAN VIEW
4: NORTH AND EAST ELEVATIONS
5: SOUTH AND WEST ELEVATIONS
6: DETAILS
7: RECYCLE SKID SHIPPING ENVELOPE
8: SATURATOR SHIPPING ENVELOPE AND ANCHORING DETAILS

RECYCLE SKIDS
QTY: 3 REQUIRED

NOTES:
1. PIPE SPOOLS TO BE WELDED IN ACCORDANCE WITH ASME B31.3.
2. TAG # SHOWN ON THIS DRAWING REPRESENT TRAIN #1 ONLY. THE FIRST DIGIT OF EACH TAG # REFERS TO IT'S TRAIN #. e.g. SAT-(x)25. ALL TAG # HAVE PREFIX OF "02-".

ENGINEER'S SEAL

PRELIMINARY
NOT FOR CONSTRUCTION

THE INFORMATION ON THIS DRAWING IS INTENDED FOR CONCEPTUAL DEVELOPMENT, PRELIMINARY DESIGN, OR FOR GUIDANCE ONLY. THIS DOCUMENT SHOULD NOT BE CONSIDERED A FINALIZED PROFESSIONAL WORK PRODUCT.

REV	DESCRIPTION	DATE	BY	CHK	APP
A	ISSUED FOR REVIEW	21-FEB-23	CE	FB	AD

REVISIONS

9087A 198 Street Langley, BC Canada V1M 3B1
Phone : 604-638-0760 Fax: 604-638-0795
www.awcsolutions.ca

THIS DRAWING IS THE PROPERTY OF AWC AND CONTAINS PROPRIETARY AND CONFIDENTIAL INFORMATION WHICH MUST NOT BE DUPLICATED, USED OR DISCLOSED OTHER THAN EXPRESSLY AUTHORIZED BY AWC.

CLIENT: CLIENT & BOROUGH OF WRANGELL
PROJECT: WRANGELL WTP
TITLE: RECYCLE SKID GENERAL ARRANGEMENT DRAWING

SCALE	PROJECTION	DEFAULT UNITS	SHEET SIZE	SHEET
NTS		IN	17 x 11	1 OF 8

DRAWING NO. 17805-PI-GAD-400 REV A

FILE: \\srv-fs01\shared\Shared\Customers\CRW Engineering\17805 Wrangell AK\5 Engineering\5.13 Piping\5.13.H Diagrams & Dwgs (2D)\5.13.H.1 GAs & Elev Dwgs

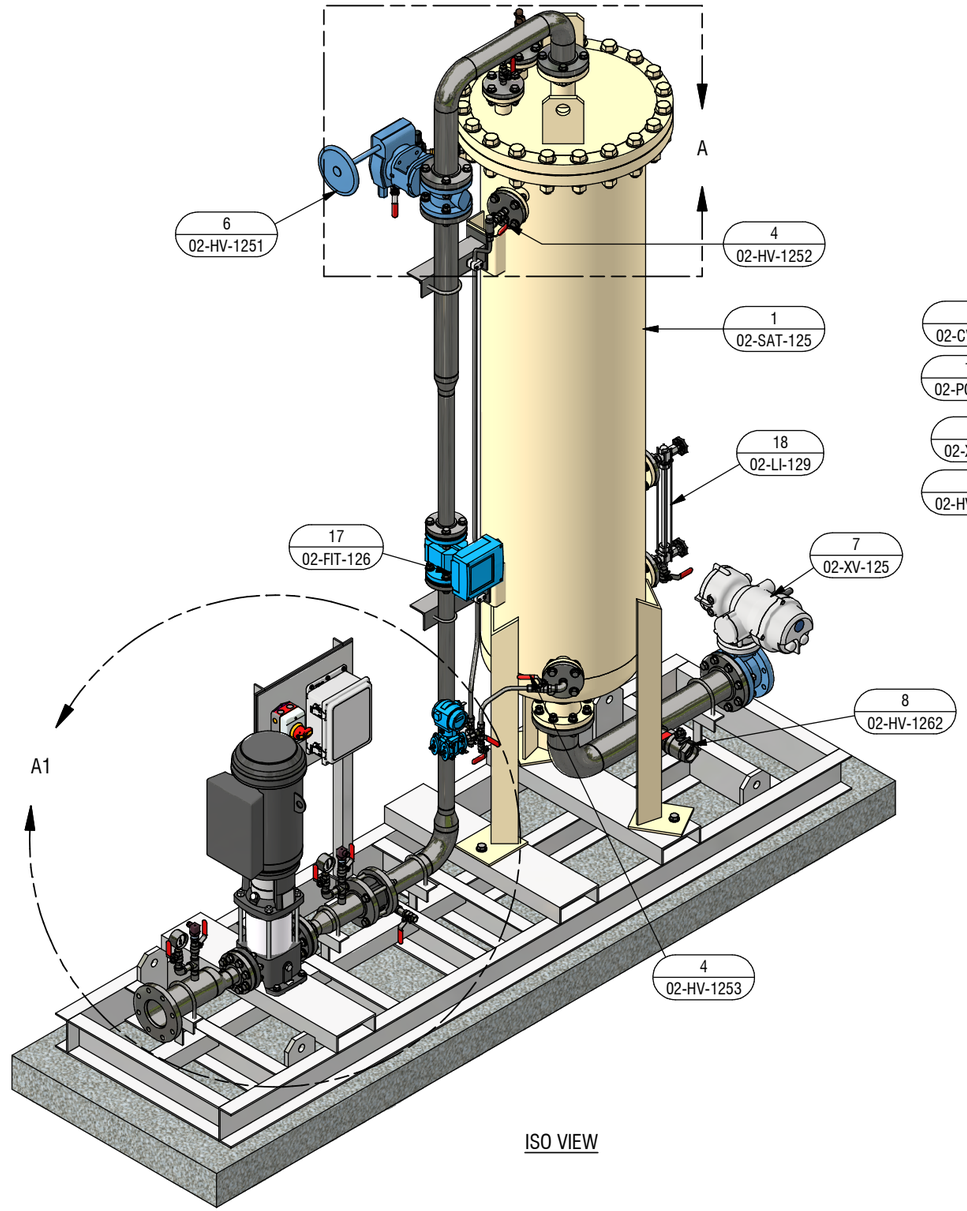

ISO VIEW

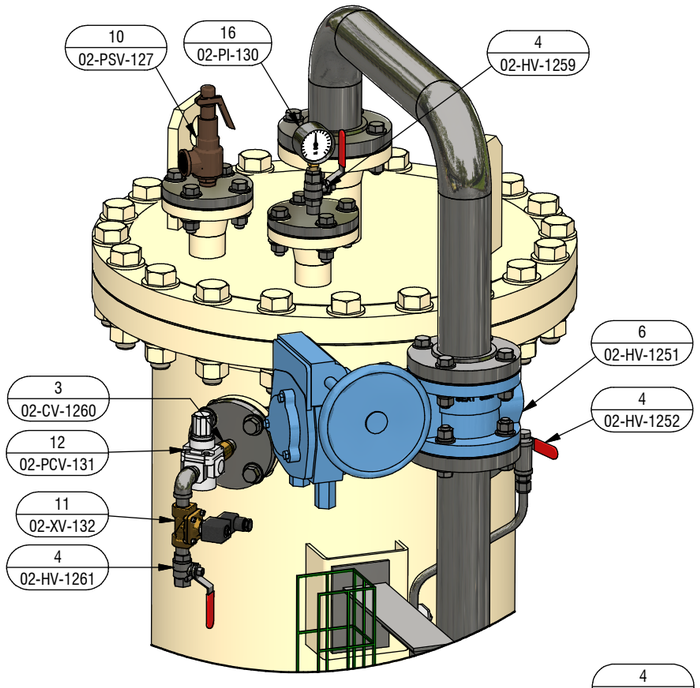

DETAIL A1
ISO VIEW
(ROTATED FOR CLARITY)

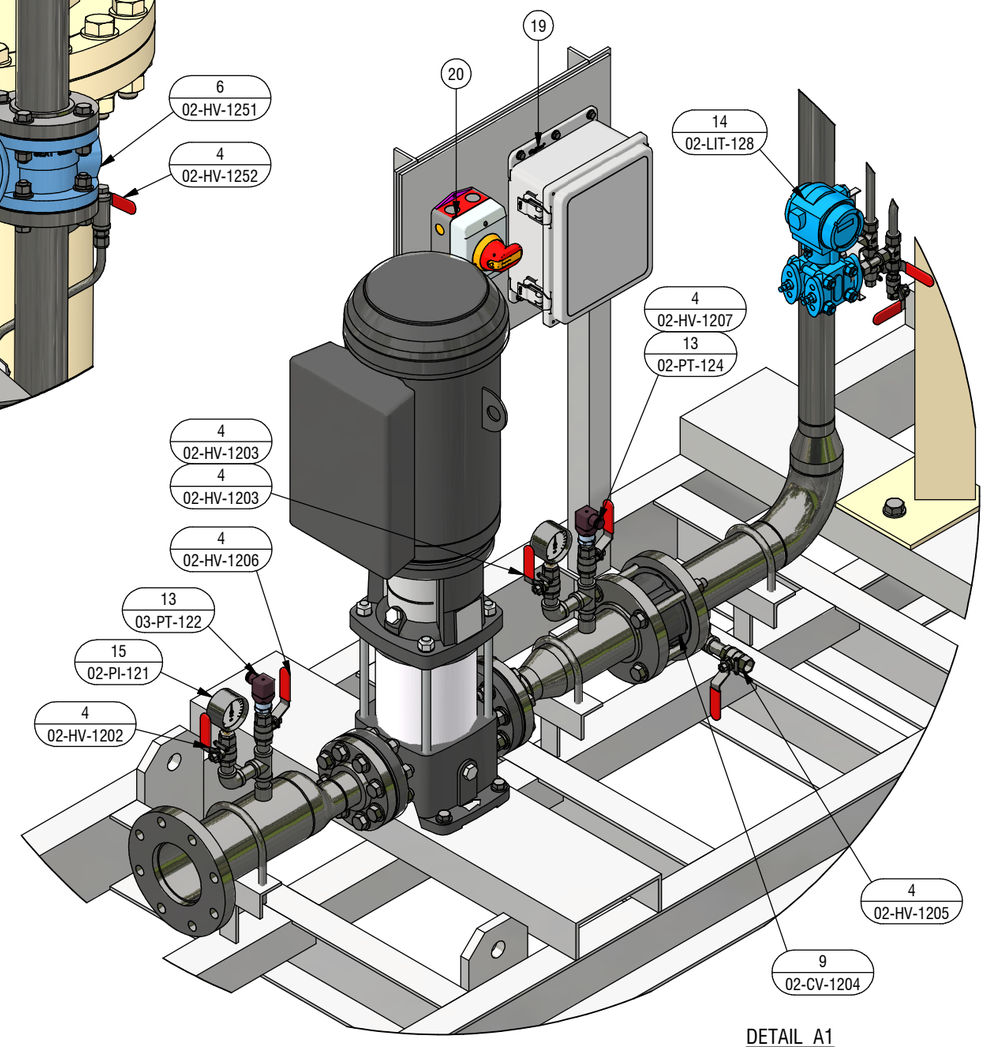

DETAIL A1

NOTES:

ENGINEER'S SEAL

PRELIMINARY
NOT FOR CONSTRUCTION

THE INFORMATION ON THIS DRAWING IS INTENDED FOR CONCEPTUAL DEVELOPMENT, PRELIMINARY DESIGN, OR FOR GUIDANCE ONLY. THIS DOCUMENT SHOULD NOT BE CONSIDERED A FINALIZED PROFESSIONAL WORK PRODUCT.

REV	DESCRIPTION	DATE	BY	CHK	APP
A	ISSUED FOR REVIEW	21-FEB-23	BE	JSC	ATA

REVISIONS

AWC
9087A 198 Street Langley, BC Canada V1M 3B1
Phone : 604-638-0760 Fax: 604-638-0795
www.awcsolutions.ca

THIS DRAWING IS THE PROPERTY OF AWC AND CONTAINS PROPRIETARY AND CONFIDENTIAL INFORMATION WHICH MUST NOT BE DUPLICATED, USED OR DISCLOSED OTHER THAN EXPRESSLY AUTHORIZED BY AWC.

CLIENT: CLIENT & BOROUGH OF WRANGELL
PROJECT: WRANGELL WTP
TITLE: RECYCLE SKID GENERAL ARRANGEMENT DRAWING

SCALE	PROJECTION	DEFAULT UNITS	SHEET SIZE	SHEET
NTS		IN	17 x 11	2 OF 8

DRAWING NO. **17805-PI-GAD-400** REV **A**

FILE: \\srv-fs01\shared\Shared\Customers\CRW Engineering\17805 Wrangell AK\5 Engineering\5.13 Piping\5.13.H Diagrams & Dwgs (2D)\5.13.H.1 GAs & Elev Dwgs

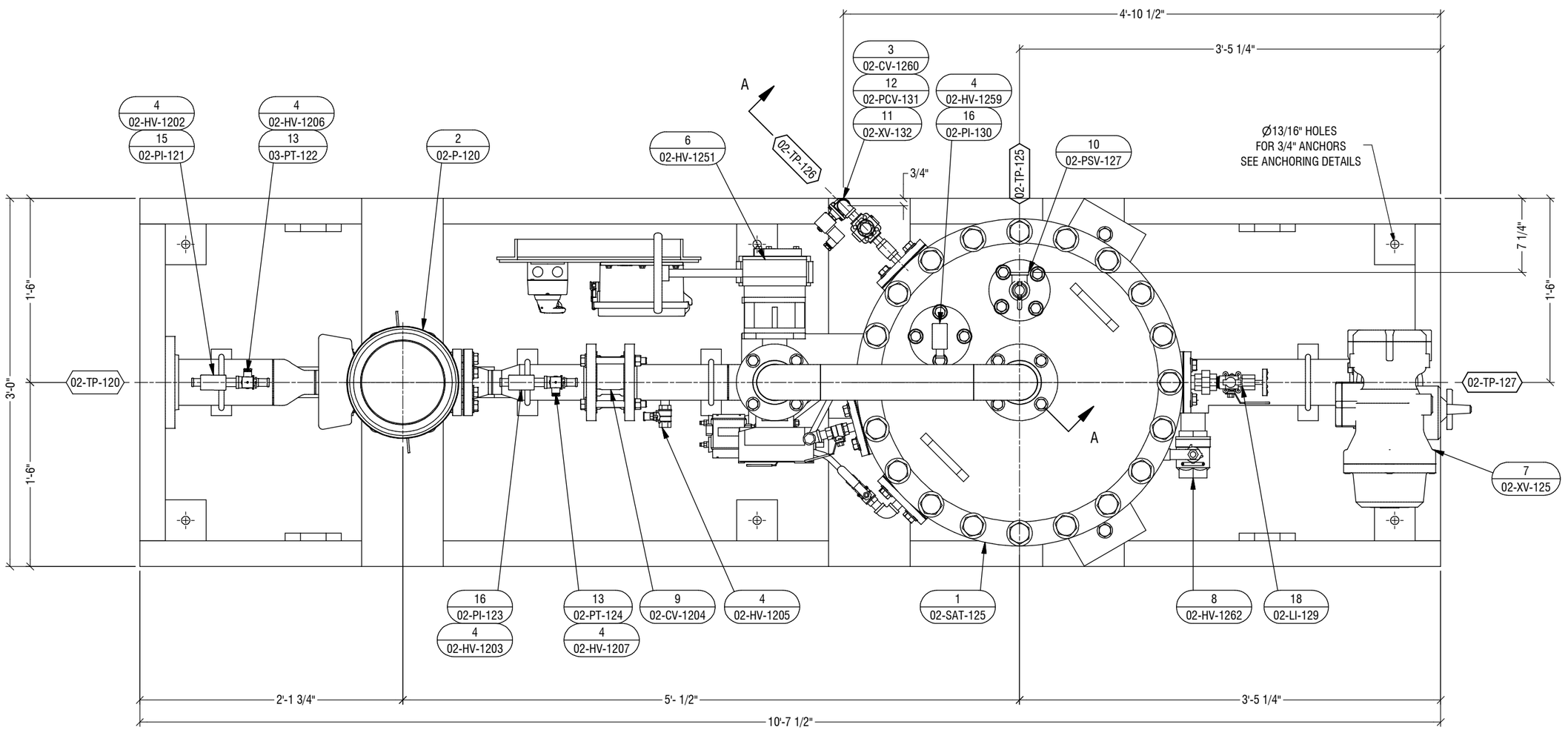

PLAN VIEW

NOTES:

ENGINEER'S SEAL

PRELIMINARY
NOT FOR CONSTRUCTION

THE INFORMATION ON THIS DRAWING IS INTENDED FOR CONCEPTUAL DEVELOPMENT, PRELIMINARY DESIGN, OR FOR GUIDANCE ONLY. THIS DOCUMENT SHOULD NOT BE CONSIDERED A FINALIZED PROFESSIONAL WORK PRODUCT.

REV	DESCRIPTION	DATE	BY	CHK	APP
A	ISSUED FOR REVIEW	21-FEB-23	~~BE~~	~~JG~~	~~AA~~

REVISIONS

9087A 198 Street Langley, BC Canada V1M 3B1
Phone : 604-638-0760 Fax: 604-638-0795
www.awcsolutions.ca

THIS DRAWING IS THE PROPERTY OF AWC AND CONTAINS PROPRIETARY AND CONFIDENTIAL INFORMATION WHICH MUST NOT BE DUPLICATED, USED OR DISCLOSED OTHER THAN EXPRESSLY AUTHORIZED BY AWC.

CLIENT: CLIENT & BOROUGH OF WRANGELL

PROJECT: WRANGELL WTP

TITLE: RECYCLE SKID GENERAL ARRANGEMENT DRAWING

SCALE	PROJECTION	DEFAULT UNITS	SHEET SIZE	SHEET
NTS		IN	17 x 11	3 OF 8

DRAWING NO. **17805-PI-GAD-400** REV **A**

FILE: \\srv-fs01\shared\Shared\Customers\CRW Engineering\17805 Wrangell AK\5 Engineering\5.13 Piping\5.13.H Diagrams & Dwgs (2D)\5.13.H.1 GAs & Elev Dwgs

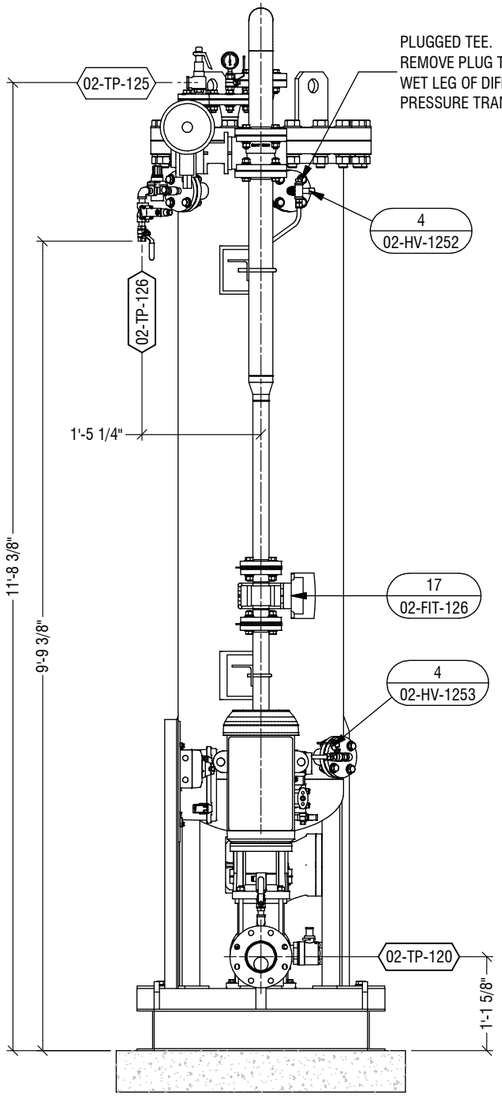

EAST ELEVATION

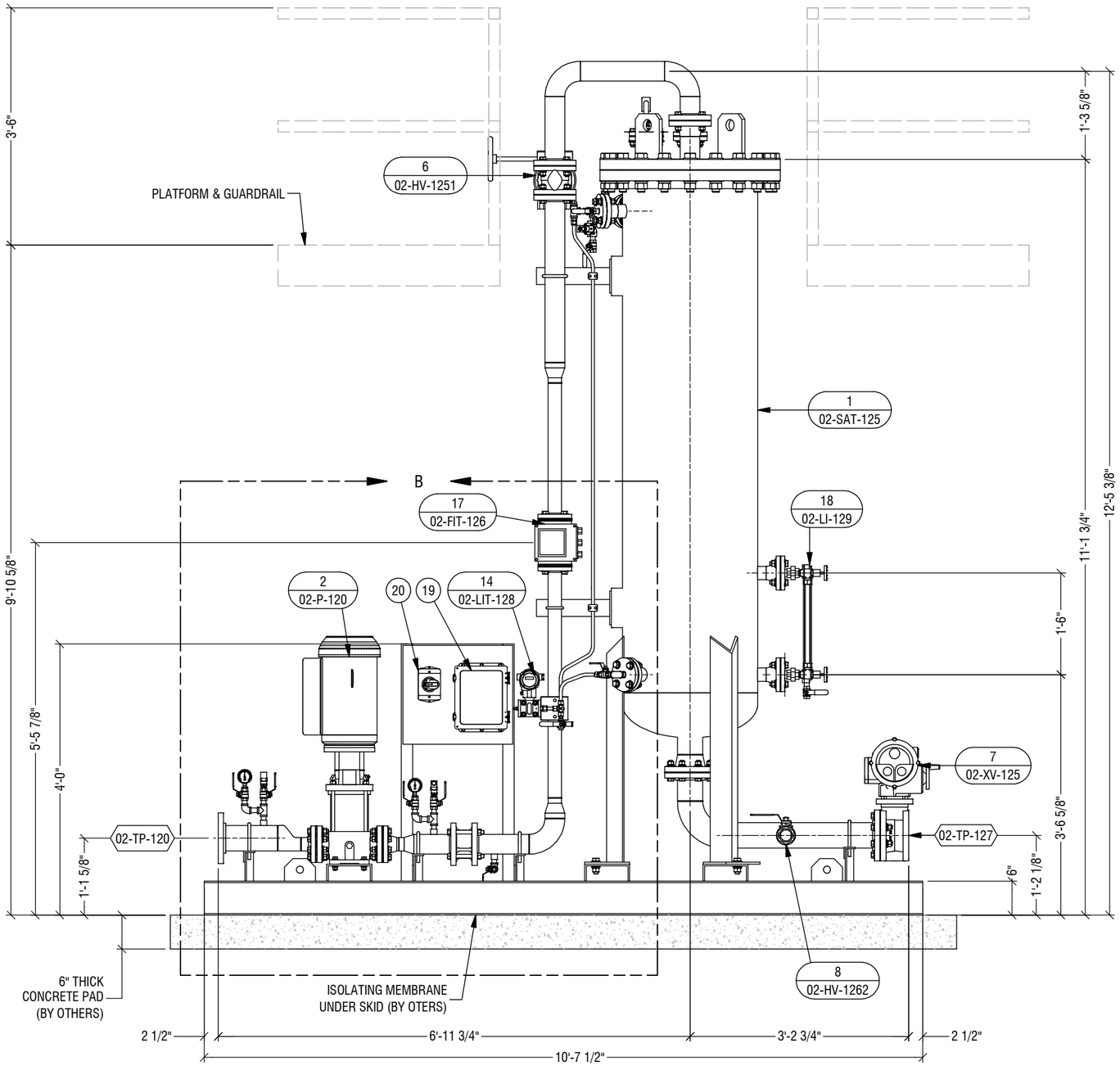

NORTH ELEVATION

NOTES:

ENGINEER'S SEAL

PRELIMINARY
NOT FOR CONSTRUCTION

THE INFORMATION ON THIS DRAWING IS INTENDED FOR CONCEPTUAL DEVELOPMENT, PRELIMINARY DESIGN, OR FOR GUIDANCE ONLY. THIS DOCUMENT SHOULD NOT BE CONSIDERED A FINALIZED PROFESSIONAL WORK PRODUCT.

REV	DESCRIPTION	DATE	BY	CHK	APP
A	ISSUED FOR REVIEW	21-FEB-23	BE	ZEC	AGA

REVISIONS

9087A 198 Street Langley, BC Canada V1M 3B1
Phone : 604-638-0760 Fax: 604-638-0795
www.awcsolutions.ca

THIS DRAWING IS THE PROPERTY OF AWC AND CONTAINS PROPRIETARY AND CONFIDENTIAL INFORMATION WHICH MUST NOT BE DUPLICATED, USED OR DISCLOSED OTHER THAN EXPRESSLY AUTHORIZED BY AWC.

CLIENT: CLIENT & BOROUGH OF WRANGELL

PROJECT: WRANGELL WTP

TITLE: RECYCLE SKID GENERAL ARRANGEMENT DRAWING

SCALE	PROJECTION	DEFAULT UNITS	SHEET SIZE	SHEET
NTS		IN	17 x 11	4 OF 8

DRAWING NO. **17805-PI-GAD-400** REV **A**

FILE: \\srv-fs01\shared\Shared\Customers\CRW Engineering\17805 Wrangell AK\5 Engineering\5.13 Piping\5.13.H Diagrams & Dwgs (2D)\5.13.H.1 GAs & Elev Dwgs

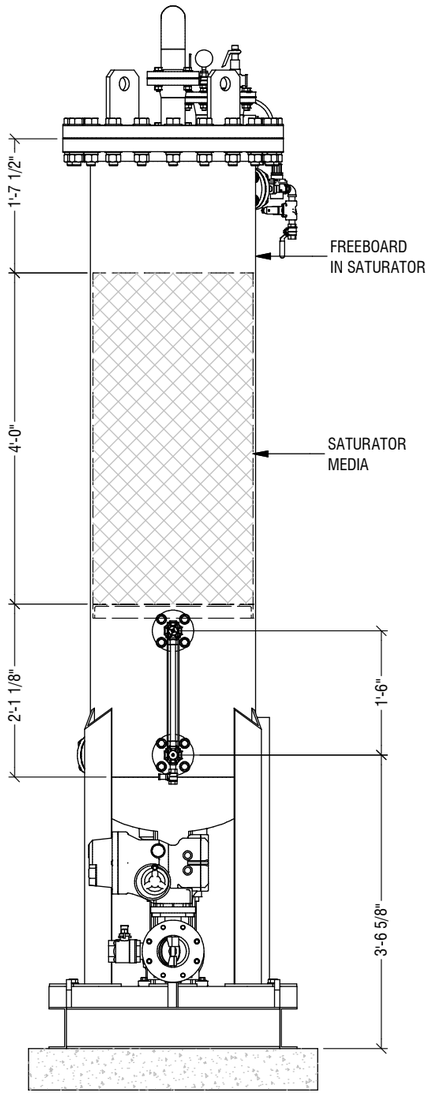

WEST ELEVATION

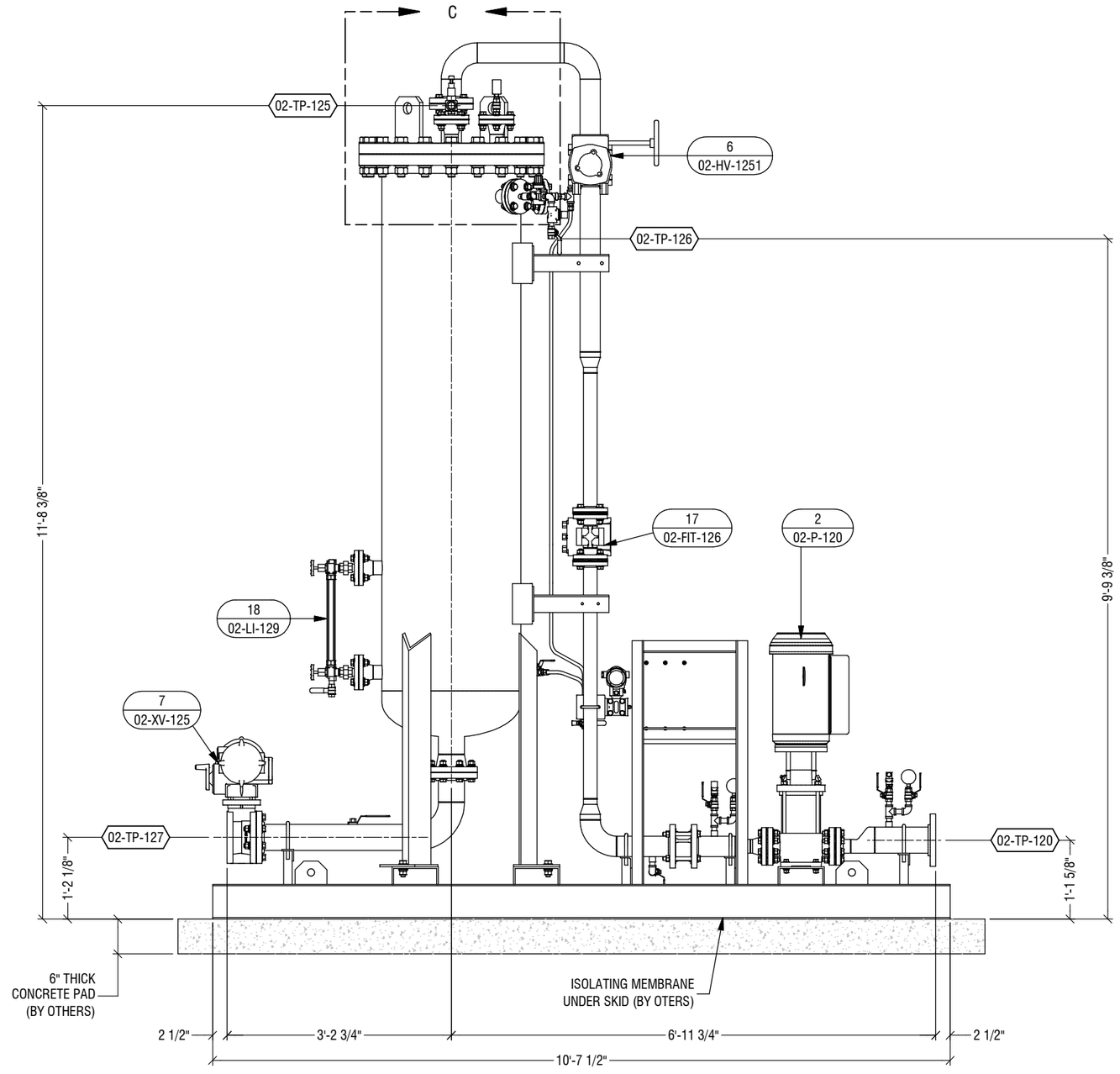

SOUTH ELEVATION

NOTES:

ENGINEER'S SEAL

PRELIMINARY
NOT FOR CONSTRUCTION

THE INFORMATION ON THIS DRAWING IS INTENDED FOR CONCEPTUAL DEVELOPMENT, PRELIMINARY DESIGN, OR FOR GUIDANCE ONLY. THIS DOCUMENT SHOULD NOT BE CONSIDERED A FINALIZED PROFESSIONAL WORK PRODUCT.

REV	DESCRIPTION	DATE	BY	CHK	APP
A	ISSUED FOR REVIEW	21-FEB-23	BE	JC	AA

REVISIONS

9087A 198 Street Langley, BC Canada V1M 3B1
Phone : 604-638-0760 Fax: 604-638-0795
www.awcsolutions.ca

THIS DRAWING IS THE PROPERTY OF AWC AND CONTAINS PROPRIETARY AND CONFIDENTIAL INFORMATION WHICH MUST NOT BE DUPLICATED, USED OR DISCLOSED OTHER THAN EXPRESSLY AUTHORIZED BY AWC.

CLIENT: CLIENT & BOROUGH OF WRANGELL

PROJECT: WRANGELL WTP

TITLE: RECYCLE SKID GENERAL ARRANGEMENT DRAWING

SCALE	PROJECTION	DEFAULT UNITS	SHEET SIZE	SHEET
NTS		IN	17 x 11	5 OF 8

DRAWING NO. **17805-PI-GAD-400** REV **A**

FILE: \\srv-fs01\shared\Shared\Customers\CRW Engineering\17805 Wrangell AK\5 Engineering\5.13 Piping\5.13.H Diagrams & Dwgs (2D)\5.13.H.1 GAs & Elev Dwgs

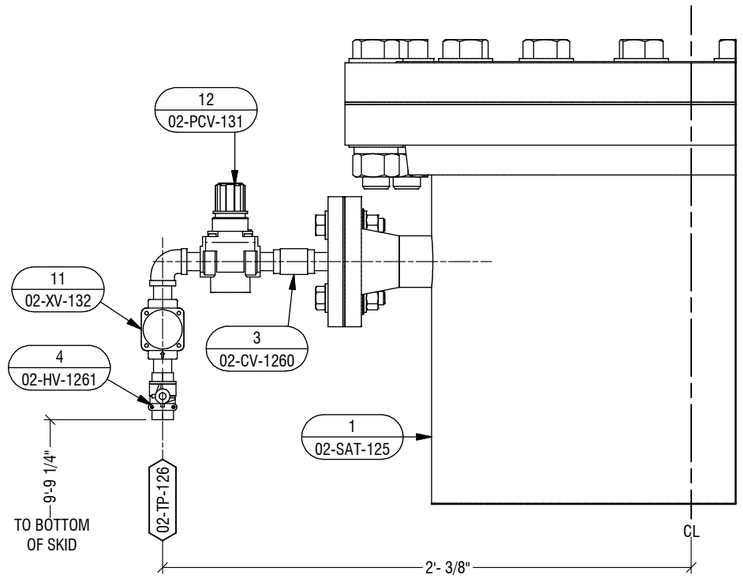

SECTION A-A
AIR SUPPLY DETAILS

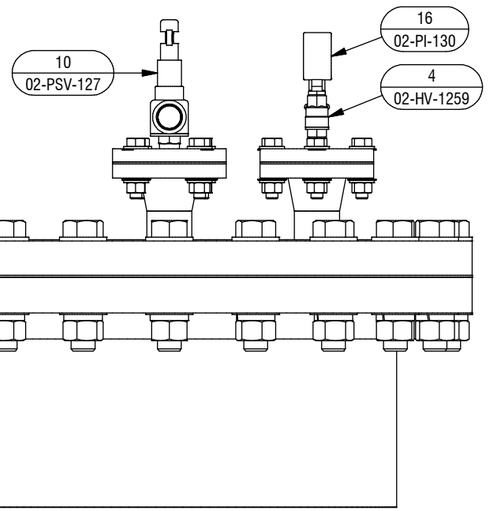

DETAIL C
PRESSURE GAUGE AND
PRESSURE SAFETY VALVE

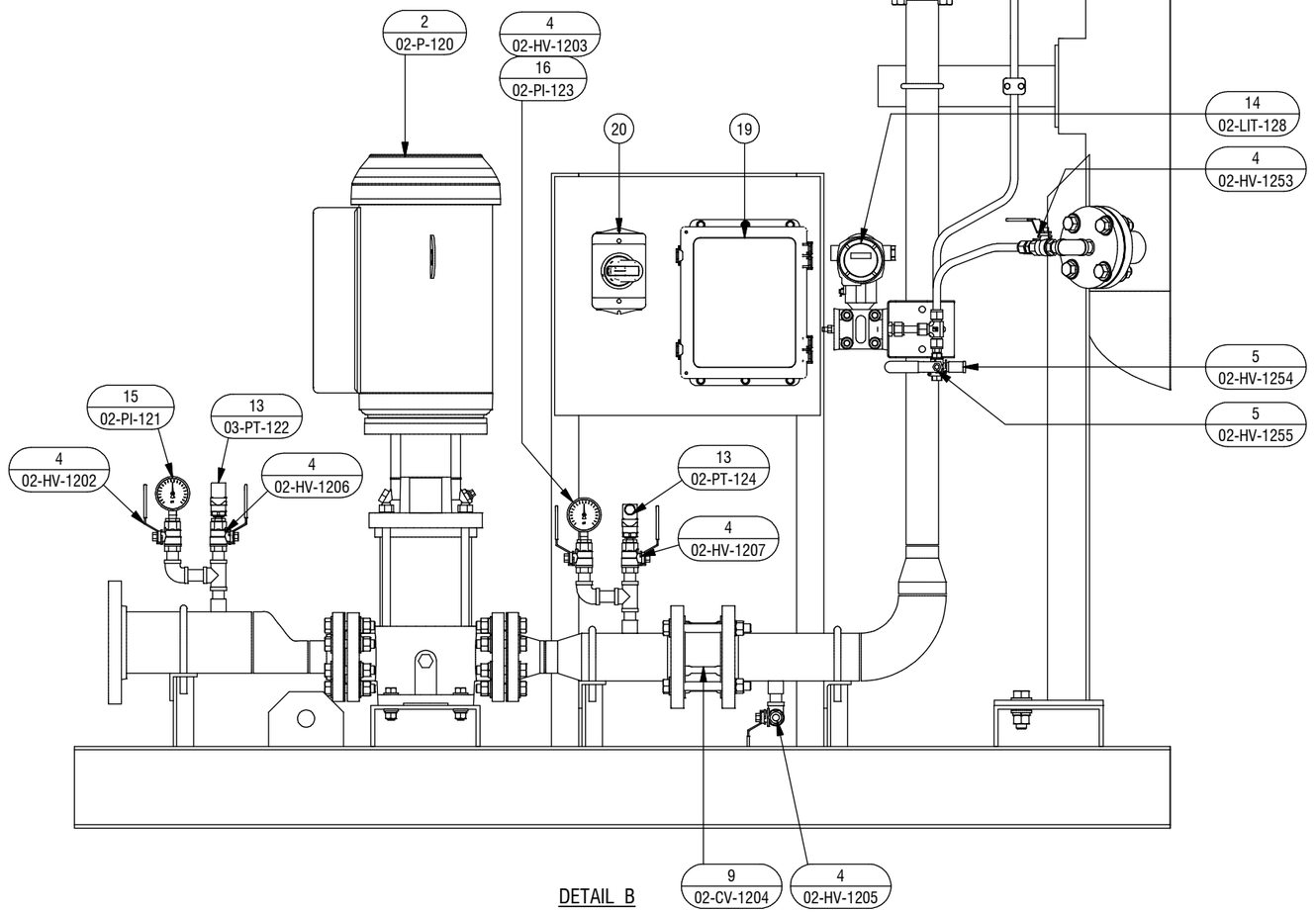

DETAIL B

NOTES:

ENGINEER'S SEAL

PRELIMINARY
NOT FOR CONSTRUCTION

THE INFORMATION ON THIS DRAWING IS INTENDED FOR CONCEPTUAL DEVELOPMENT, PRELIMINARY DESIGN, OR FOR GUIDANCE ONLY. THIS DOCUMENT SHOULD NOT BE CONSIDERED A FINALIZED PROFESSIONAL WORK PRODUCT.

REV	DESCRIPTION	DATE	BY	CHK	APP
A	ISSUED FOR REVIEW	21-FEB-23	~~BE~~	~~JC~~	~~AA~~

REVISIONS

9087A 198 Street Langley, BC Canada V1M 3B1
Phone : 604-638-0760 Fax: 604-638-0795
www.awcsolutions.ca

THIS DRAWING IS THE PROPERTY OF AWC AND CONTAINS PROPRIETARY AND CONFIDENTIAL INFORMATION WHICH MUST NOT BE DUPLICATED, USED OR DISCLOSED OTHER THAN EXPRESSLY AUTHORIZED BY AWC.

CLIENT: CLIENT & BOROUGH OF WRANGELL
PROJECT: WRANGELL WTP
TITLE: RECYCLE SKID GENERAL ARRANGEMENT DRAWING

SCALE	PROJECTION	DEFAULT UNITS	SHEET SIZE	SHEET
NTS		IN	17 x 11	6 OF 8

DRAWING NO. **17805-PI-GAD-400** REV **A**

FILE: \\srv-fs01\shared\Shared\Customers\CRW Engineering\17805 Wrangell AK\5 Engineering\5.13 Piping\5.13.H Diagrams & Dwgs (2D)\5.13.H.1 GAs & Elev Dwgs

RECYCLE SKID SHIPPING ENVELOPE & LIFTING DETAILS

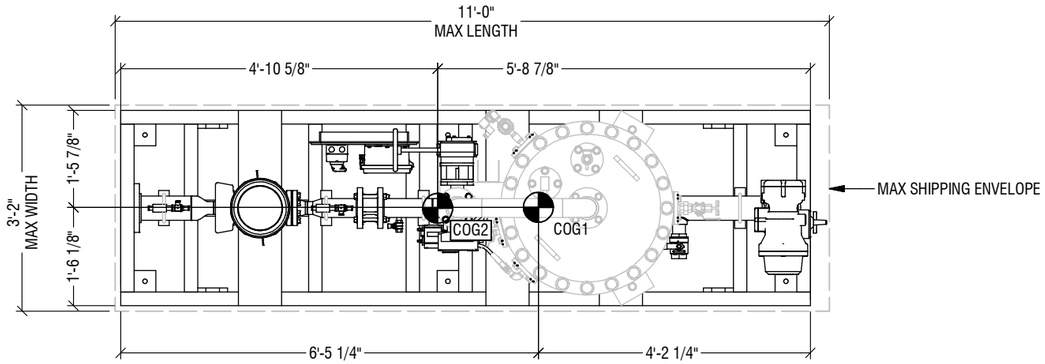

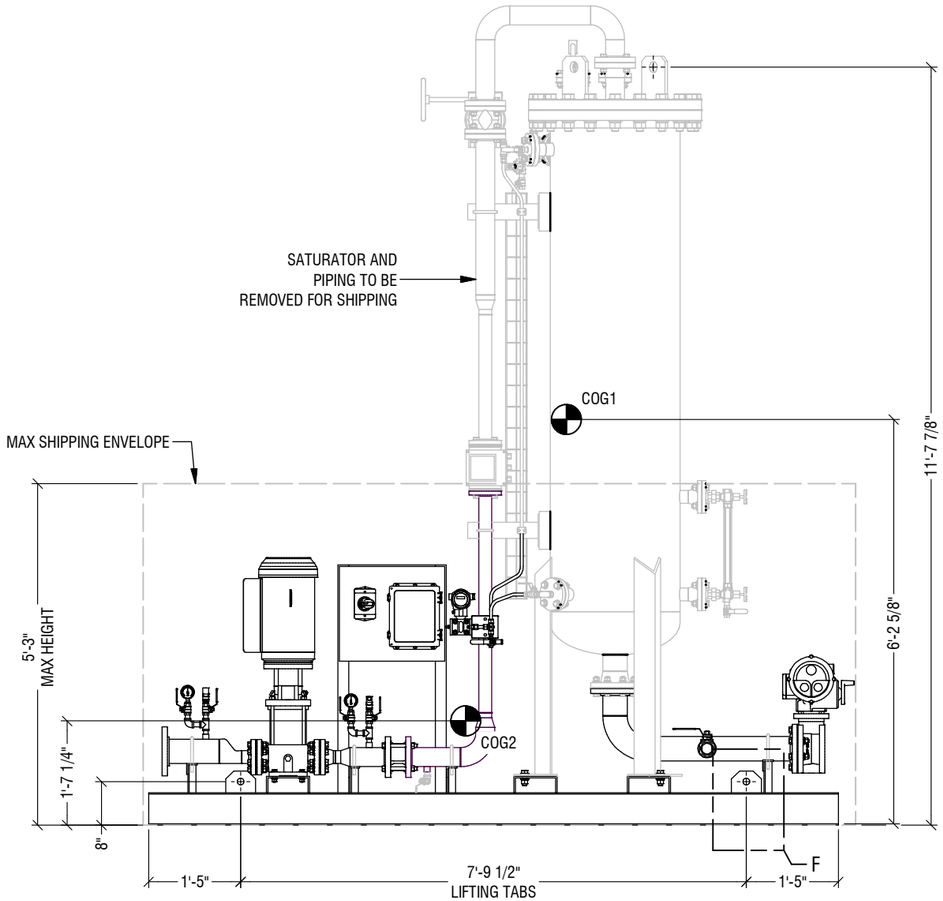

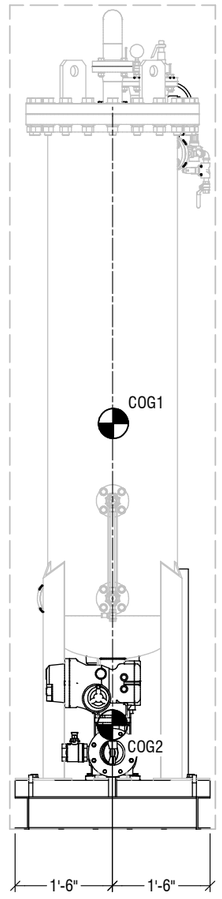

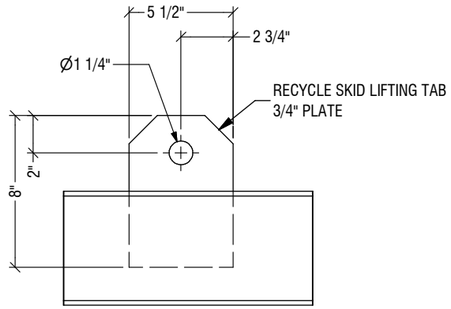

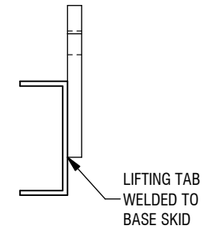

DETAIL F
RECYCLE SKID LIFTING TABS
TYP, 4 PLACES

NOTES:

1. COG1 = CENTER OF GRAVITY OF THE PUMP SKID WITH SATURATOR REMOVED FOR SHIPPING.
   COG2 = CENTER OF GRAVITY OF THE COMPLETE SKID WITH SATURATOR INSTALLED.
2. REFER TO SHEET # 1 FOR EQUIPMENT WEIGHTS.
3. SATURATOR LIFTING LUGS SHALL NOT BE USED TO LIFT THE ENTIRE RECYCLE SKID.

ENGINEER'S SEAL

PRELIMINARY
NOT FOR CONSTRUCTION

THE INFORMATION ON THIS DRAWING IS INTENDED FOR CONCEPTUAL DEVELOPMENT, PRELIMINARY DESIGN, OR FOR GUIDANCE ONLY. THIS DOCUMENT SHOULD NOT BE CONSIDERED A FINALIZED PROFESSIONAL WORK PRODUCT.

REV	DESCRIPTION	DATE	BY	CHK	APP
A	ISSUED FOR REVIEW	21-FEB-23	BE	JC	AA

REVISIONS

9087A 198 Street Langley, BC Canada V1M 3B1
Phone : 604-638-0760 Fax: 604-638-0795
www.awcsolutions.ca

THIS DRAWING IS THE PROPERTY OF AWC AND CONTAINS PROPRIETARY AND CONFIDENTIAL INFORMATION WHICH MUST NOT BE DUPLICATED, USED OR DISCLOSED OTHER THAN EXPRESSLY AUTHORIZED BY AWC.

CLIENT: CLIENT & BOROUGH OF WRANGELL
PROJECT: WRANGELL WTP
TITLE: RECYCLE SKID GENERAL ARRANGEMENT DRAWING

SCALE	PROJECTION	DEFAULT UNITS	SHEET SIZE	SHEET
NTS		IN	17 x 11	7 OF 8

DRAWING NO. **17805-PI-GAD-400** REV **A**

FILE: \\srv-fs01\shared\Shared\Customers\CRW Engineering\17805 Wrangell AK\5 Engineering\5.13 Piping\5.13.H Diagrams & Dwgs (2D)\5.13.H.1 GAs & Elev Dwgs

SATURATOR SHIPPING ENVELOPE & LIFTING DETAILS

SATURATOR LIFTING TABS DETAILS
TYP, 2 PLACES

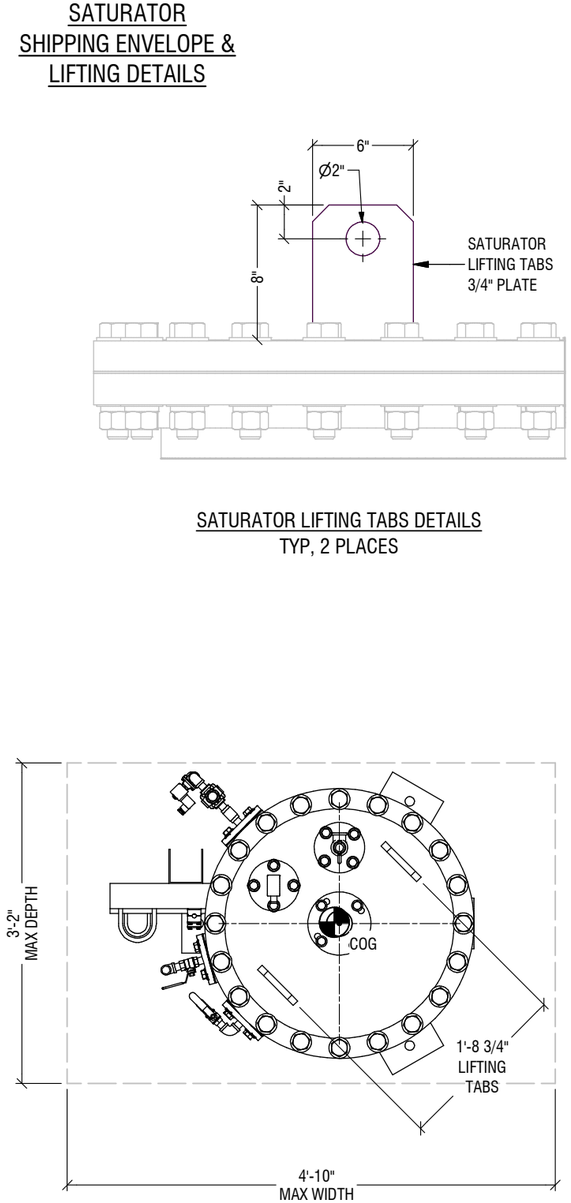

PLAN VIEW

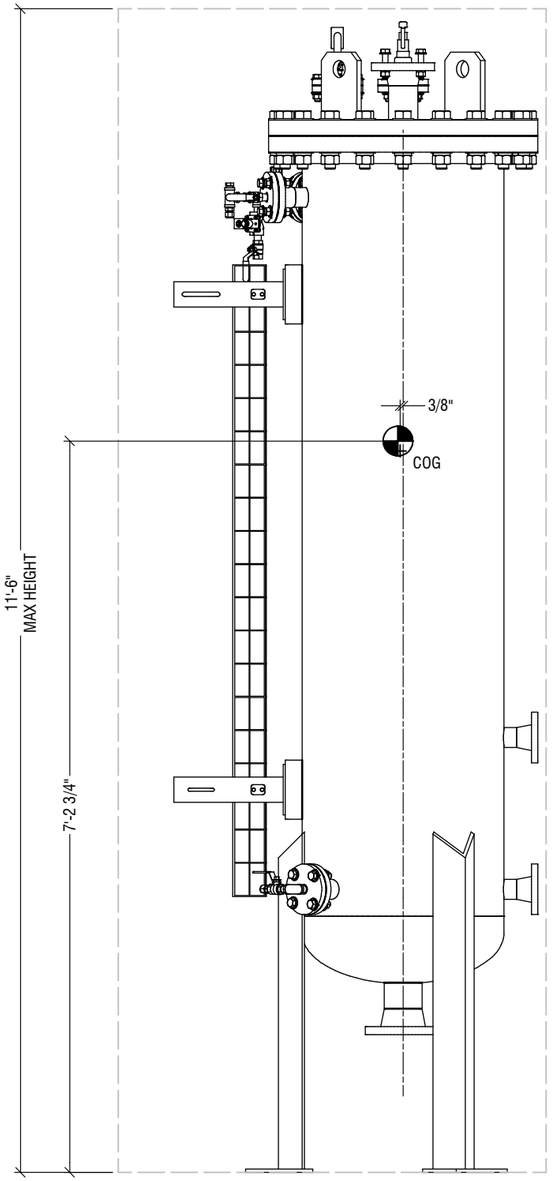

FRONT VIEW

ANCHORING DETAILS

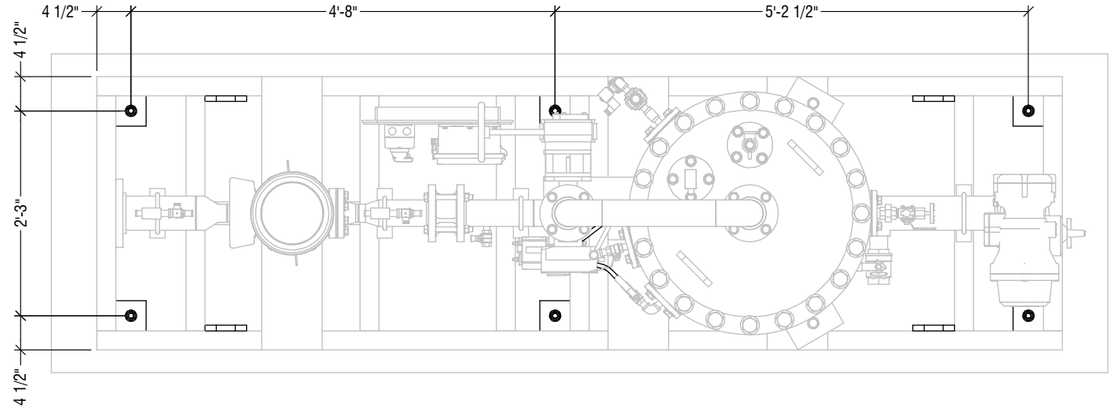

PLAN VIEW
BASE SKID

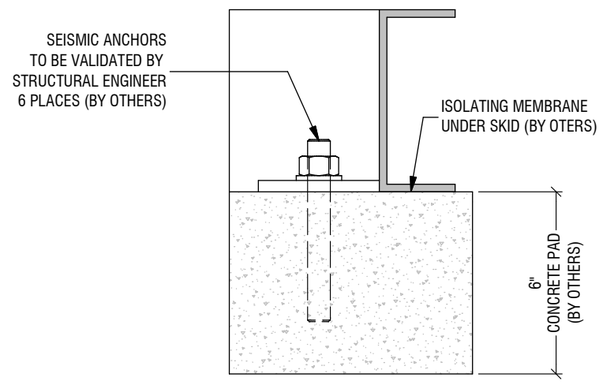

SECTION B-B
RECYCLE SKID
ANCHOR DETAILS

NOTES:
1. REFER TO SHEET # 1 FOR EQUIPMENT WEIGHTS.

ENGINEER'S SEAL

PRELIMINARY
NOT FOR CONSTRUCTION

THE INFORMATION ON THIS DRAWING IS INTENDED FOR CONCEPTUAL DEVELOPMENT, PRELIMINARY DESIGN, OR FOR GUIDANCE ONLY. THIS DOCUMENT SHOULD NOT BE CONSIDERED A FINALIZED PROFESSIONAL WORK PRODUCT.

REV	DESCRIPTION	DATE	BY	CHK	APP
A	ISSUED FOR REVIEW	21-FEB-23			

REVISIONS

AWC
9087A 198 Street Langley, BC Canada V1M 3B1
Phone : 604-638-0760 Fax: 604-638-0795
www.awcsolutions.ca

THIS DRAWING IS THE PROPERTY OF AWC AND CONTAINS PROPRIETARY AND CONFIDENTIAL INFORMATION WHICH MUST NOT BE DUPLICATED, USED OR DISCLOSED OTHER THAN EXPRESSLY AUTHORIZED BY AWC.

CLIENT	CLIENT & BOROUGH OF WRANGELL
PROJECT	WRANGELL WTP
TITLE	RECYCLE SKID GENERAL ARRANGEMENT DRAWING
SCALE	NTS
PROJECTION	
DEFAULT UNITS	IN
SHEET SIZE	17 x 11
SHEET	8 OF 8
DRAWING NO.	17805-PI-GAD-400
REV	A

FILE: \\srv-fs01\shared\Shared\Customers\CRW Engineering\17805 Wrangell AK\5 Engineering\5.13 Piping\5.13.H Diagrams & Dwgs (2D)\5.13.H.1 GAs & Elev Dwgs

REFERENCE DRAWINGS

1. PLANT LAYOUT: 17805-PI-LAY-001
2. FLOW DISTRIBUTOR GENERAL ARRANGEMENT: 17805-PI-GAD-100
3. DAF GENERAL ARRANGEMENT: 17805-PI-GAD-200
4. FILTER GENERAL ARRANGEMENT: 17805-PI-GAD-300
5. RECYCLE SKID GENERAL ARRANGEMENT: 17805-PI-GAD-400

GENERAL

1. DIMENSIONS ARE SHOWN IN INCHES UNLESS STATED OTHERWISE
2. DIMENSIONS SHOWN ARE PRELIMINARY AND NOT TO BE CONSIDERED FINAL.

ENGINEERING, STANDARDS & SPECIFICATION

1. AWC WILL PERFORM SEISMIC ANCHOR SIZING AS PER THE SPECIFICATIONS AND APPLICABLE GOVERNING CODES AND STANDARDS.
2. AWC WILL PROVIDE STAMPED ANCHOR DETAILS SHOWING THE REQUIRED REACTION FORCES INCLUDING THE ANCHOR BOLT SIZE, MATERIAL, AND GRADE.
3. ALL CALCULATIONS AND DESIGN RELATED TO CONCRETE INCLUDING STRENGTH, ANCHOR BOLT EMBEDMENT DEPTH, AND EPOXY SELECTION BY OTHERS.
4. STRUCTURAL DESIGN BY AWC WILL BE AUTHENTICATED BY A 3RD PARTY STRUCTURAL ENGINEER REGISTERED IN THE STATE OF ALASKA, USA. ISSUED FOR CONSTRUCTION (IFC) ONLY.
5. ALL TANK, SKID, PLATFORM & STAIR WELDING TO CONFORM TO CSA W47.1 (STEEL), OR CSA W47.2 (ALUMINUM).

TESTING

1. ALL WELDS TO BE VISUALLY INSPECTED FOR DEFECTS.

INSTALLATION

1. SUPPLY AND INSTALLATION OF ANCHOR BOLTS TO BE SUPPLIED AND INSTALLED BY OTHERS.

PLATFORMS & STAIRS

1. PLATFORM & STAIR STRUCTURAL FRAMING MEMBERS TO BE ALUMINUM 6061-T6.
2. PLATFORM GRATING TO BE 1-1/4" X 3/16", TYPE 19-W-4 ALUMINUM 6063-T6
3. PLATFORM & STAIR RAILINGS TO BE 2" x 2" x 3/16" SQUARE TUBE (ROUND CORNER) ALUMINUM 6061-T6.
4. STAIR TREADS TO BE 1-1/4" X 3/16", TYPE 19-W-4 SERRATED BAR GRATING, ALUMINUM 6063-T6, C/W NOSING.
5. STAIRS TO BE IN ACCORDANCE WITH OSHA REGULATIONS.
6. STAIRS TO BE PROVIDED WITH A 1" GAP FOR GROUTING.
7. ANY COLUMNS ATTACHING TO THE CONCRETE FLOOR TO INCLUDE A 1" GAP FOR GROUTING.
8. ALL HARDWARE TO BE 18-8 SS UNLESS NOTED OTHERWISE.

SHEET INDEX:

1: GENERAL NOTES
2: WALKWAY PLAN
3: COLUMN PLAN
4: WALKWAY DETAILS
5: WALKWAY DETAILS
6: STAIR DETAILS

NOTES:

ENGINEER'S SEAL

PRELIMINARY
NOT FOR CONSTRUCTION

THE INFORMATION ON THIS DRAWING IS INTENDED FOR CONCEPTUAL DEVELOPMENT, PRELIMINARY DESIGN, OR FOR GUIDANCE ONLY. THIS DOCUMENT SHOULD NOT BE CONSIDERED A FINALIZED PROFESSIONAL WORK PRODUCT.

REV	DESCRIPTION	DATE	BY	CHK	APP
B	RE-ISSUED FOR REVIEW	22-FEB-23	RS	JEW	TEC
A	ISSUED FOR REVIEW	21-FEB-23	RS	JE	TC

REVISIONS

9087A 198 Street Langley, BC Canada V1M 3B1
Phone : 604-638-0760 Fax: 604-638-0795
www.awcsolutions.ca

THIS DRAWING IS THE PROPERTY OF AWC AND CONTAINS PROPRIETARY AND CONFIDENTIAL INFORMATION WHICH MUST NOT BE DUPLICATED, USED OR DISCLOSED OTHER THAN EXPRESSLY AUTHORIZED BY AWC.

CLIENT: CITY & BOROUGH OF WRANGELL

PROJECT: WRANGELL WTP

TITLE: PLATFORM & STAIR GENERAL ARRANGEMENT

SCALE	PROJECTION	DEFAULT UNITS	SHEET SIZE	SHEET
NTS		IN	17 x 11	1 OF 6

DRAWING NO. **17805-PI-GAD-900** REV **B**

FILE: \\srv-fs01\shared\Shared\Customers\CRW Engineering\17805 Wrangell AK\5 Engineering\5.13 Piping\5.13.H Diagrams & Dwgs (2D)\5.13.H.1 GAs & Elev Dwgs

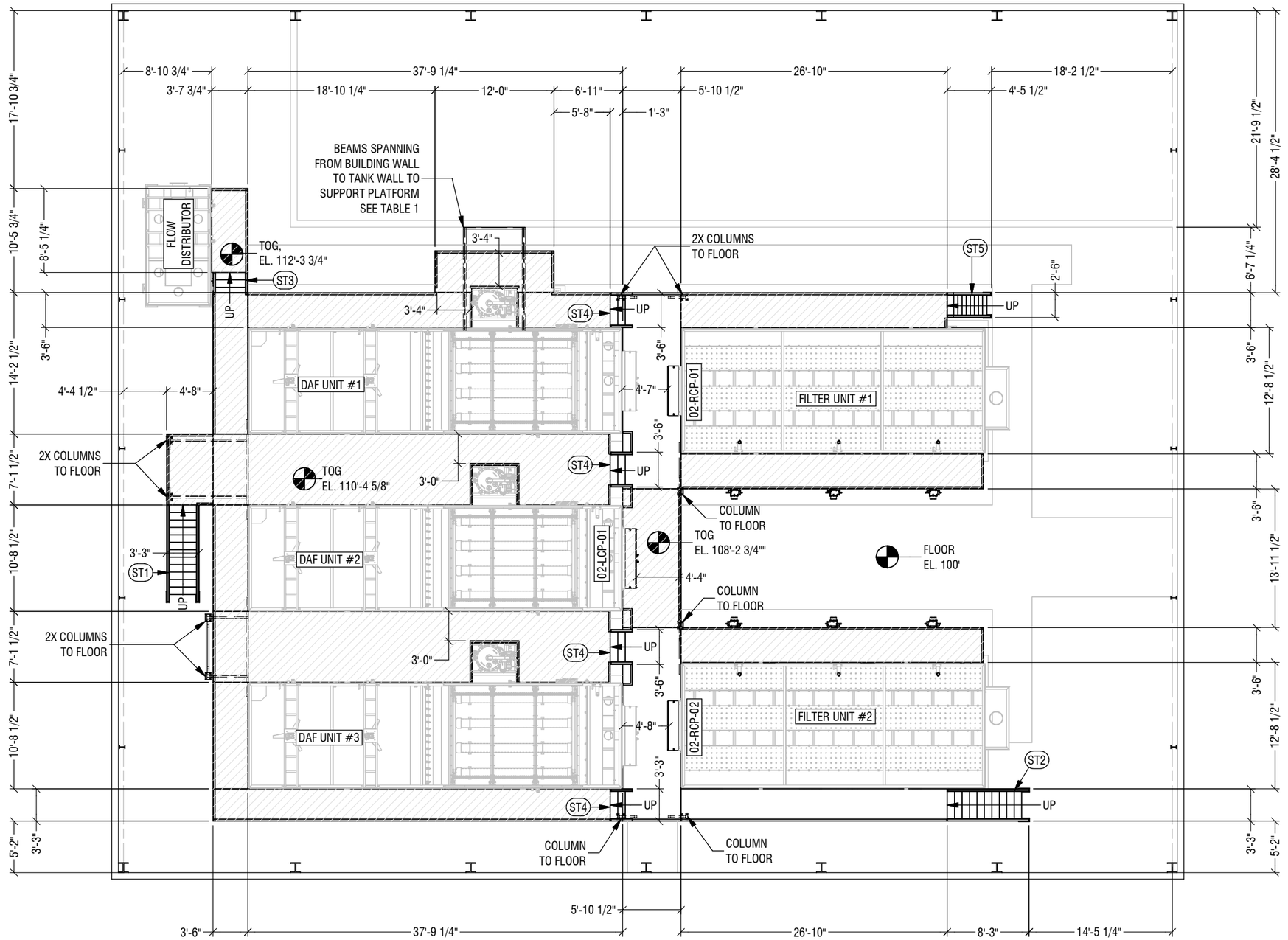

PLATFORM PLAN

TABLE 1
UNFACTORED LOAD ON BUILDING WALL DEAD LOAD = 400 LBS, EACH LIVE LOAD = 1350 LBS EACH

NOTES:

1. DIMENSIONS SHOWN ON THE PLATFORMS ARE TO THE OUTSIDE EDGES OF THE PLATFORM. SUBTRACT 2" FROM THE RAILING SECTIONS WITH A RAILING TO DETERMINE THE CLEAR OPENING DIMENSION.
2. DIMENSIONS SHOWN ON THE STAIRS ARE TO THE OUTSIDE OF THE STAIR RAILINGS. SUBTRACT 4" FROM OVERALL WIDTH FOR THE CLEAR OPENING DIMENSION.

ENGINEER'S SEAL

PRELIMINARY NOT FOR CONSTRUCTION

THE INFORMATION ON THIS DRAWING IS INTENDED FOR CONCEPTUAL DEVELOPMENT, PRELIMINARY DESIGN, OR FOR GUIDANCE ONLY. THIS DOCUMENT SHOULD NOT BE CONSIDERED A FINALIZED PROFESSIONAL WORK PRODUCT.

REV	DESCRIPTION	DATE	BY	CHK	APP
B	RE-ISSUED FOR REVIEW	22-FEB-23	RS	JE	TC
A	ISSUED FOR REVIEW	21-FEB-23	RS	JE	TC

REVISIONS

AWC
9087A 198 Street Langley, BC Canada V1M 3B1
Phone : 604-638-0760 Fax: 604-638-0795
www.awcsolutions.ca

THIS DRAWING IS THE PROPERTY OF AWC AND CONTAINS PROPRIETARY AND CONFIDENTIAL INFORMATION WHICH MUST NOT BE DUPLICATED, USED OR DISCLOSED OTHER THAN EXPRESSLY AUTHORIZED BY AWC.

CLIENT	CITY & BOROUGH OF WRANGELL
PROJECT	WRANGELL WTP
TITLE	PLATFORM & STAIR GENERAL ARRANGEMENT
SCALE	NTS
PROJECTION	
DEFAULT UNITS	IN
SHEET SIZE	17 x 11
SHEET	2 OF 6
DRAWING NO.	17805-PI-GAD-900
REV	B

FILE: \\srv-fs01\shared\Shared\Customers\CRW Engineering\17805 Wrangell AK\5 Engineering\5.13 Piping\5.13.H Diagrams & Dwgs (2D)\5.13.H.1 GAs & Elev Dwgs

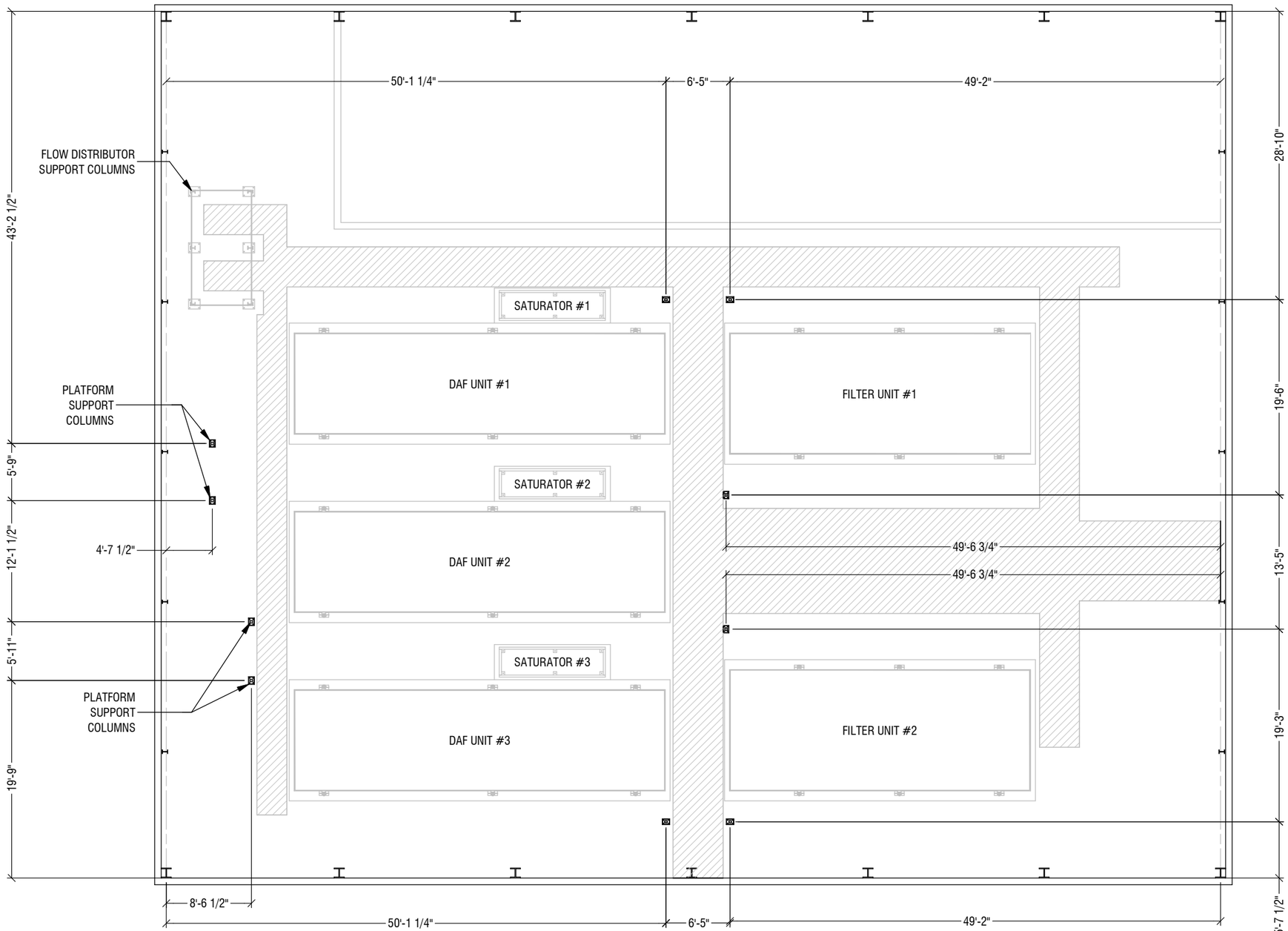

FLOOR PLAN

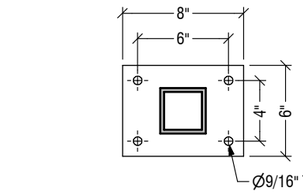

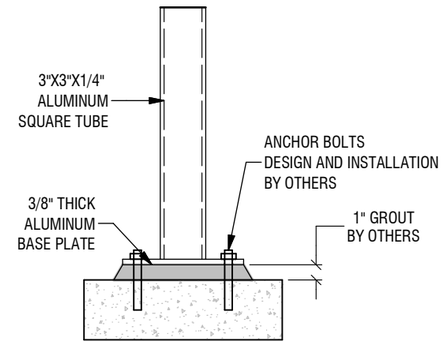

TYPICAL COLUMN SUPPORT

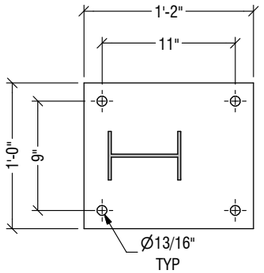

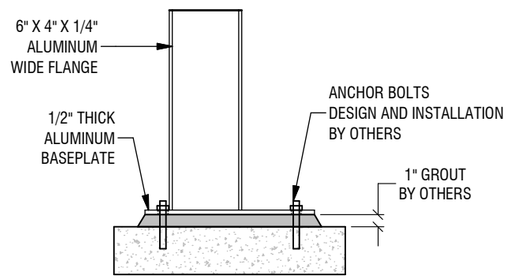

FLOW DISTRIBUTOR COLUMNS

B

NOTES:

1. COLUMN DIMENSIONS SHOWN ARE TO THE CENTERLINE OF THE COLUMNS.
2. LAYOUT OF TRENCHES SHOWN ARE BASED ON CLIENTS 3D REVIT MODEL, "CBW WTP REVIT AND CAD FILES" PROVIDED TO AWC ON 17-FEB-23. TRENCHES ARE SHOWN HERE FOR REFERENCE ONLY AND TO INDICATED CLEARANCES AROUND AWC 'S PACKAGED EQUIPMENT AND PLATFORM SUPPORT COLUMNS.

ENGINEER'S SEAL

PRELIMINARY NOT FOR CONSTRUCTION

THE INFORMATION ON THIS DRAWING IS INTENDED FOR CONCEPTUAL DEVELOPMENT, PRELIMINARY DESIGN, OR FOR GUIDANCE ONLY. THIS DOCUMENT SHOULD NOT BE CONSIDERED A FINALIZED PROFESSIONAL WORK PRODUCT.

REV	DESCRIPTION	DATE	BY	CHK	APP
B	RE-ISSUED FOR REVIEW	22-FEB-23	RS	JE	TC
A	ISSUED FOR REVIEW	21-FEB-23	RS	JE	TC

REVISIONS

AWC
9087A 198 Street Langley, BC Canada V1M 3B1
Phone : 604-638-0760 Fax: 604-638-0795
www.awcsolutions.ca

THIS DRAWING IS THE PROPERTY OF AWC AND CONTAINS PROPRIETARY AND CONFIDENTIAL INFORMATION WHICH MUST NOT BE DUPLICATED, USED OR DISCLOSED OTHER THAN EXPRESSLY AUTHORIZED BY AWC.

CLIENT: CITY & BOROUGH OF WRANGELL

PROJECT: WRANGELL WTP

TITLE: PLATFORM & STAIR GENERAL ARRANGEMENT

SCALE	PROJECTION	DEFAULT UNITS	SHEET SIZE	SHEET
NTS		IN	17 x 11	3 OF 6

DRAWING NO. **17805-PI-GAD-900** REV **B**

FILE: \\srv-fs01\shared\Shared\Customers\CRW Engineering\17805 Wrangell AK\5 Engineering\5.13 Piping\5.13.H Diagrams & Dwgs (2D)\5.13.H.1 GAs & Elev Dwgs

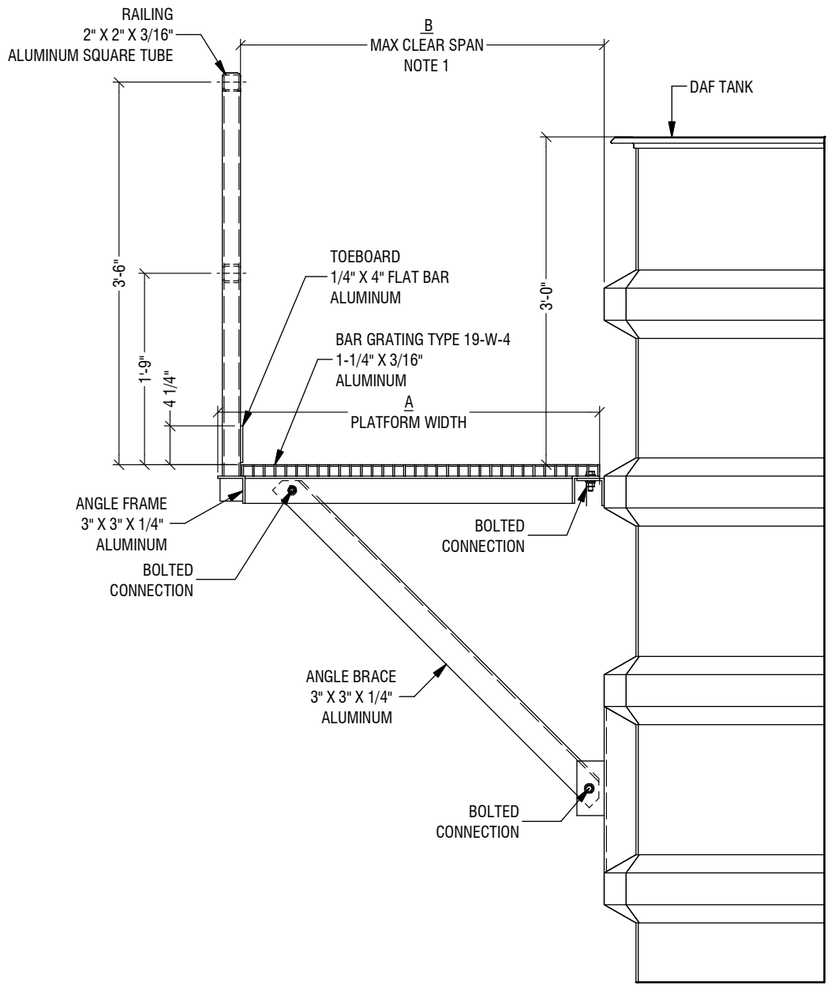

PLATFORM SCHEDULE	
A - PLATFORM WIDTH	B - CLEAR SPAN
3'-3"	3'-2"
3'-6"	3'-4"

TYPICAL PLATFORM
(BRACED FROM TANK)

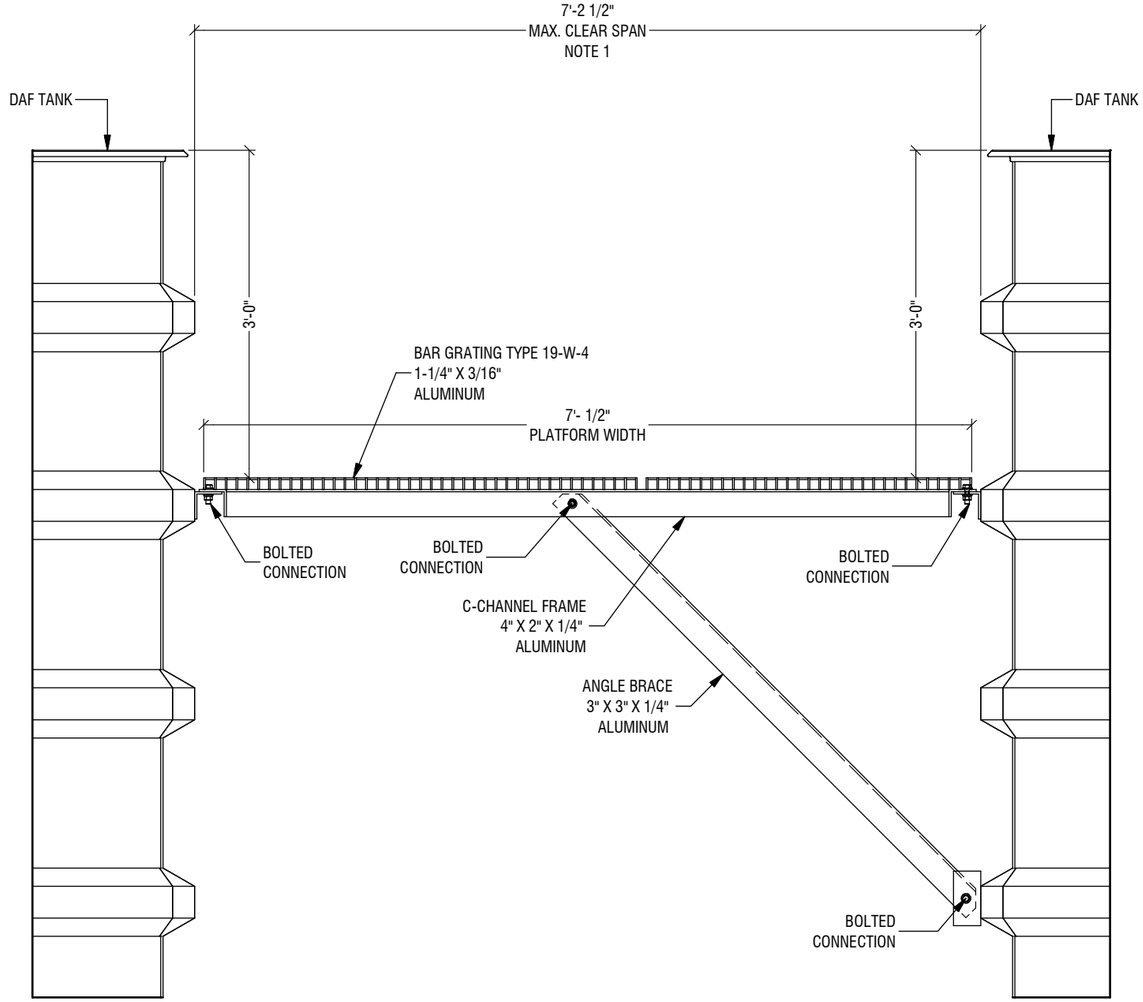

TYPICAL PLATFORM
(BETWEEN DAF TANKS)

NOTES:
1. CLEAR SPAN SHOWN FOR WALKWAYS ARE THE MAXIMUM SPAN POSSIBLE. SOME AREAS OF THE WALKWAY MAY HAVE ADDITIONAL EQUIPMENT OR BRACKETRY MOUNTED TO THE TANK THAT WILL REDUCE THE AVAILABLE SPAN.

ENGINEER'S SEAL

PRELIMINARY
NOT FOR CONSTRUCTION

THE INFORMATION ON THIS DRAWING IS INTENDED FOR CONCEPTUAL DEVELOPMENT, PRELIMINARY DESIGN, OR FOR GUIDANCE ONLY. THIS DOCUMENT SHOULD NOT BE CONSIDERED A FINALIZED PROFESSIONAL WORK PRODUCT.

REV	DESCRIPTION	DATE	BY	CHK	APP
B	RE-ISSUED FOR REVIEW	22-FEB-23	RS	JE	TC
A	ISSUED FOR REVIEW	21-FEB-23	RS	JE	TC

REVISIONS

AWC
9087A 198 Street Langley, BC Canada V1M 3B1
Phone : 604-638-0760 Fax: 604-638-0795
www.awcsolutions.ca

THIS DRAWING IS THE PROPERTY OF AWC AND CONTAINS PROPRIETARY AND CONFIDENTIAL INFORMATION WHICH MUST NOT BE DUPLICATED, USED OR DISCLOSED OTHER THAN EXPRESSLY AUTHORIZED BY AWC.

CLIENT: CITY & BOROUGH OF WRANGELL
PROJECT: WRANGELL WTP
TITLE: PLATFORM & STAIR GENERAL ARRANGEMENT

SCALE	PROJECTION	DEFAULT UNITS	SHEET SIZE	SHEET
NTS		IN	17 x 11	4 OF 6

DRAWING NO. **17805-PI-GAD-900** REV **B**

FILE: \\srv-fs01\shared\Shared\Customers\CRW Engineering\17805 Wrangell AK\5 Engineering\5.13 Piping\5.13.H Diagrams & Dwgs (2D)\5.13.H.1 GAs & Elev Dwgs

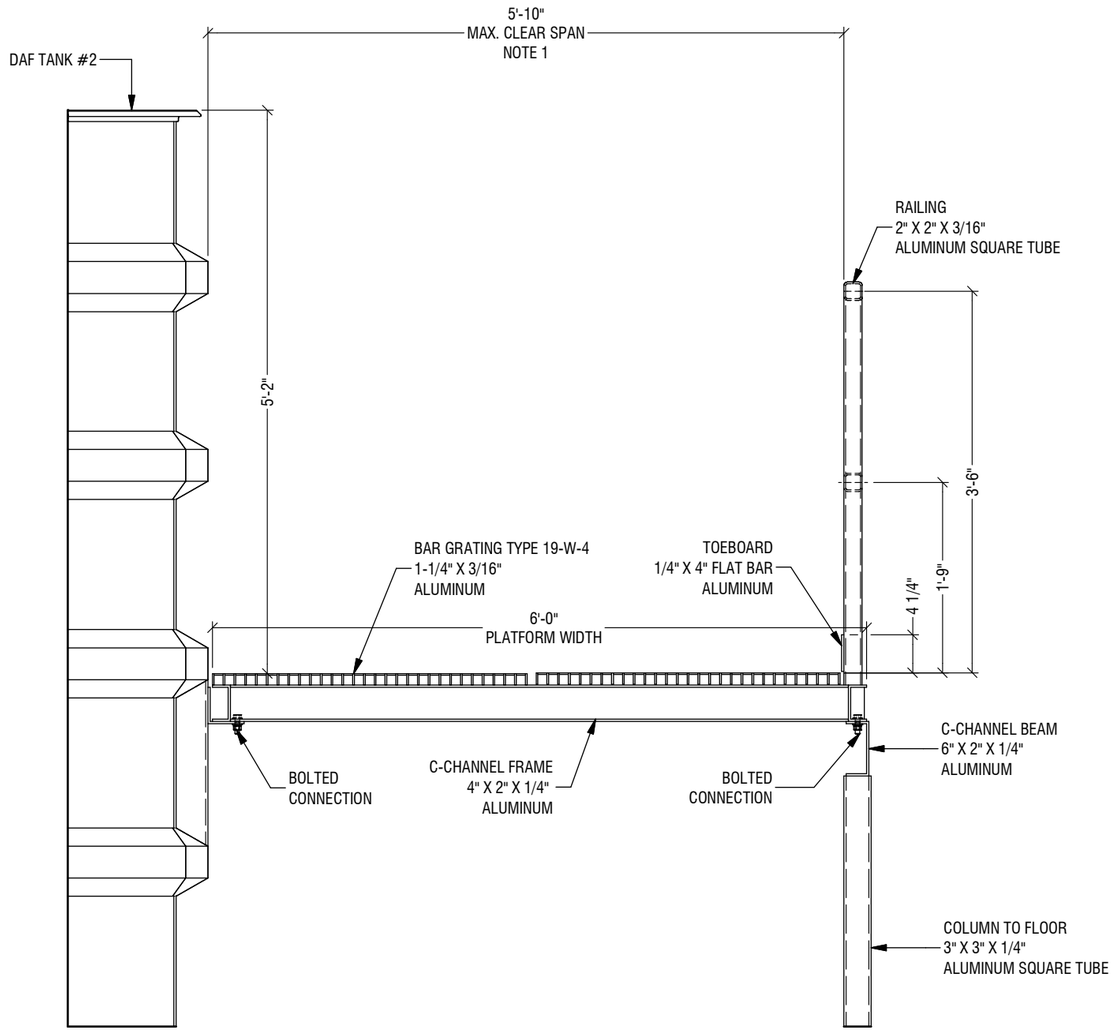

TYPICAL PLATFORM
(AT END OF DAF TANK#2)

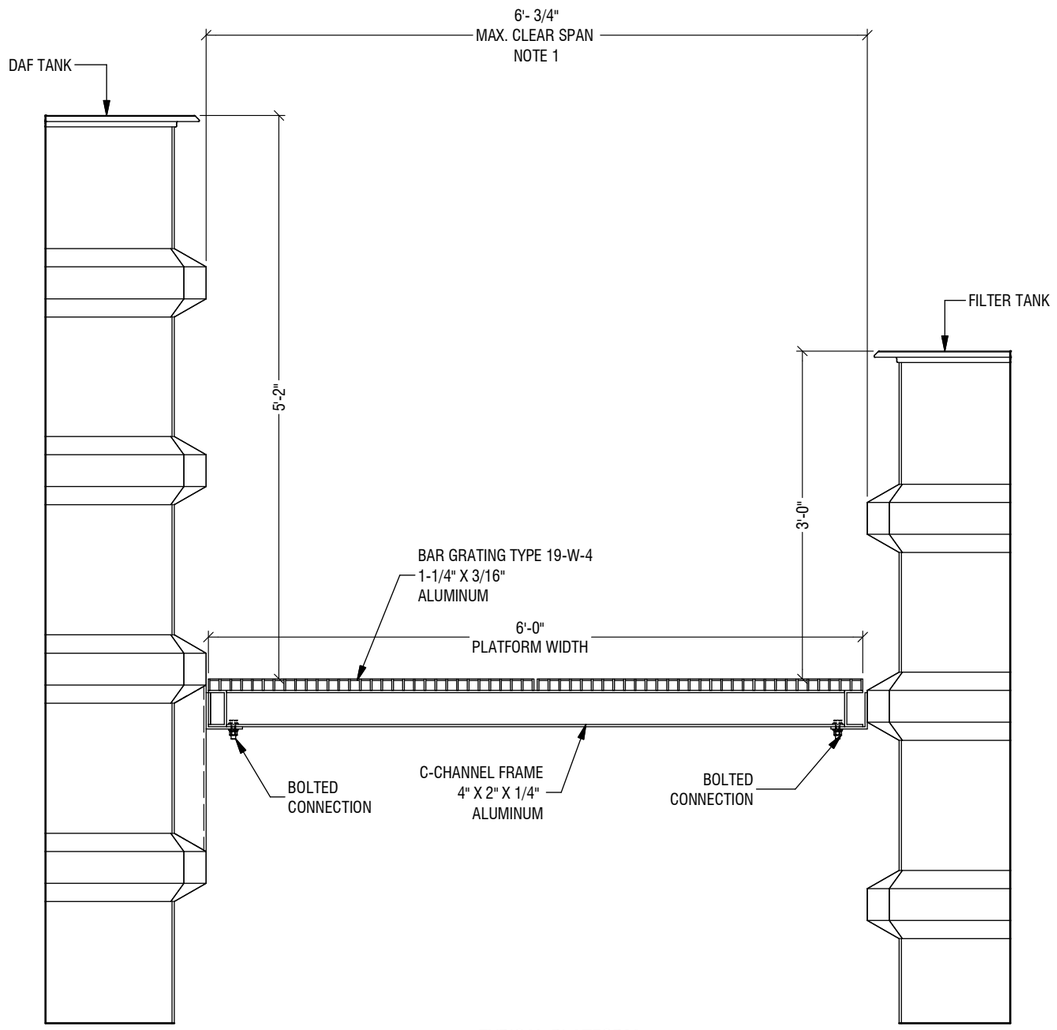

TYPICAL PLATFORM
(BETWEEN DAF TANKS #1 & #3
AND FILTER TANKS)

NOTES:
1. CLEAR SPAN SHOWN FOR WALKWAYS ARE THE MAXIMUM SPAN POSSIBLE. SOME AREAS OF THE WALKWAY MAY HAVE ADDITIONAL EQUIPMENT OR BRACKETRY MOUNTED TO THE TANK THAT WILL REDUCE THE AVAILABLE SPAN.

ENGINEER'S SEAL

PRELIMINARY
NOT FOR CONSTRUCTION

THE INFORMATION ON THIS DRAWING IS INTENDED FOR CONCEPTUAL DEVELOPMENT, PRELIMINARY DESIGN, OR FOR GUIDANCE ONLY. THIS DOCUMENT SHOULD NOT BE CONSIDERED A FINALIZED PROFESSIONAL WORK PRODUCT.

REV	DESCRIPTION	DATE	BY	CHK	APP
B	RE-ISSUED FOR REVIEW	22-FEB-23	RS	JE	TC
A	ISSUED FOR REVIEW	21-FEB-23	RS	JE	TC

REVISIONS

9087A 198 Street Langley, BC Canada V1M 3B1
Phone : 604-638-0760 Fax: 604-638-0795
www.awcsolutions.ca

THIS DRAWING IS THE PROPERTY OF AWC AND CONTAINS PROPRIETARY AND CONFIDENTIAL INFORMATION WHICH MUST NOT BE DUPLICATED, USED OR DISCLOSED OTHER THAN EXPRESSLY AUTHORIZED BY AWC.

CLIENT: CITY & BOROUGH OF WRANGELL
PROJECT: WRANGELL WTP
TITLE: PLATFORM & STAIR GENERAL ARRANGEMENT
SCALE: NTS | PROJECTION | DEFAULT UNITS: IN | SHEET SIZE: 17 x 11 | SHEET: 5 OF 6
DRAWING NO.: **17805-PI-GAD-900** | REV: **B**

FILE: \\srv-fs01\shared\Shared\Customers\CRW Engineering\17805 Wrangell AK\5 Engineering\5.13 Piping\5.13.H Diagrams & Dwgs (2D)\5.13.H.1 GAs & Elev Dwgs

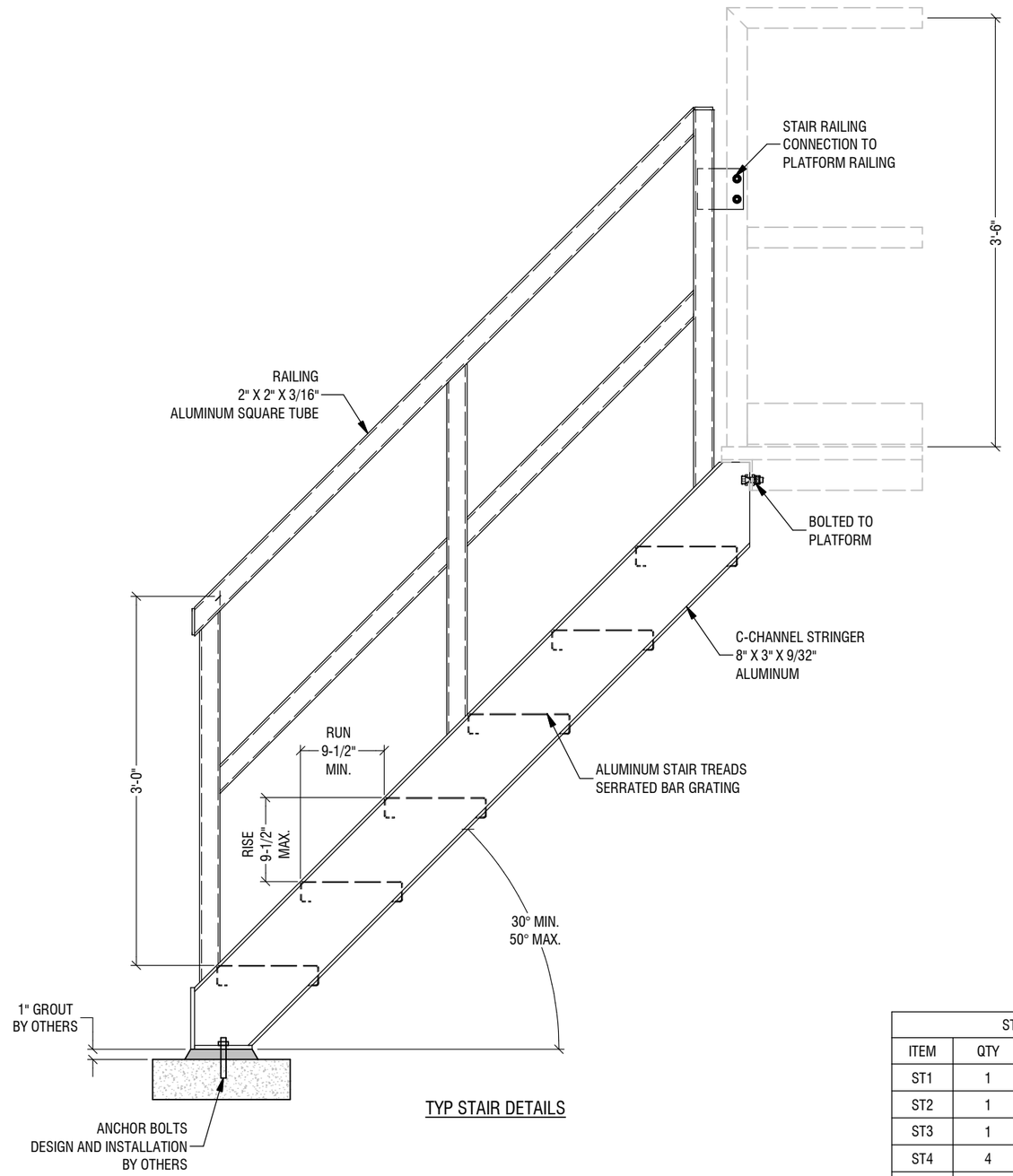

TYP STAIR DETAILS

STAIR SCHEDULE			
ITEM	QTY	# STEPS	TYPE
ST1	1	12	STANDARD
ST2	1	10	STANDARD
ST3	1	3	STANDARD
ST4	4	2	STANDARD
ST5	1	8	SHIP STAIR

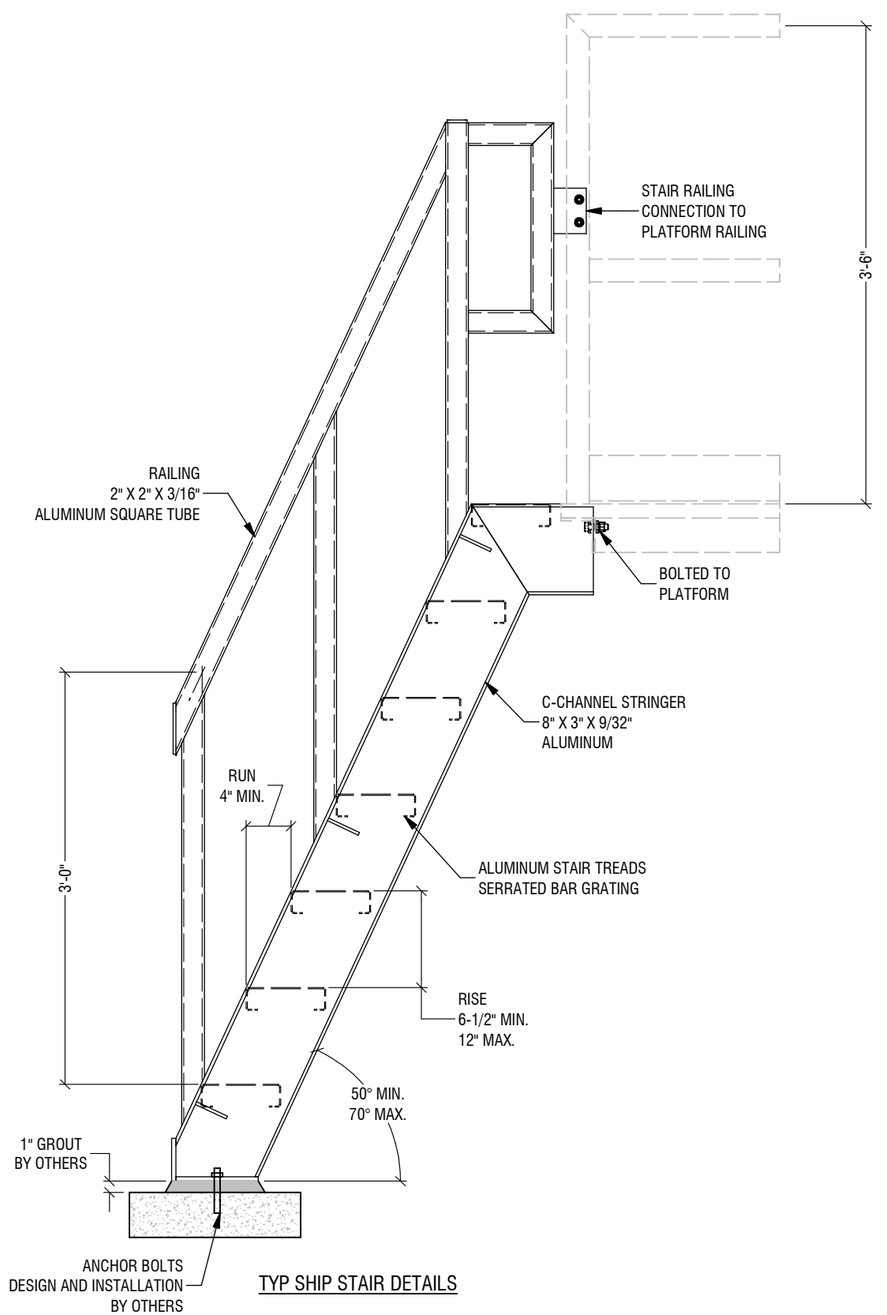

TYP SHIP STAIR DETAILS

NOTES:

ENGINEER'S SEAL

PRELIMINARY
NOT FOR CONSTRUCTION

THE INFORMATION ON THIS DRAWING IS INTENDED FOR CONCEPTUAL DEVELOPMENT, PRELIMINARY DESIGN, OR FOR GUIDANCE ONLY. THIS DOCUMENT SHOULD NOT BE CONSIDERED A FINALIZED PROFESSIONAL WORK PRODUCT.

REV	DESCRIPTION	DATE	BY	CHK	APP
B	RE-ISSUED FOR REVIEW	22-FEB-23	~~RS~~	~~JEW~~	~~TC~~
A	ISSUED FOR REVIEW	21-FEB-23	RS	JE	TC

REVISIONS

AWC
9087A 198 Street Langley, BC Canada V1M 3B1
Phone : 604-638-0760 Fax: 604-638-0795
www.awcsolutions.ca

THIS DRAWING IS THE PROPERTY OF AWC AND CONTAINS PROPRIETARY AND CONFIDENTIAL INFORMATION WHICH MUST NOT BE DUPLICATED, USED OR DISCLOSED OTHER THAN EXPRESSLY AUTHORIZED BY AWC.

CLIENT: CITY & BOROUGH OF WRANGELL

PROJECT: WRANGELL WTP

TITLE: PLATFORM & STAIR GENERAL ARRANGEMENT

SCALE	PROJECTION	DEFAULT UNITS	SHEET SIZE	SHEET
NTS		IN	17 x 11	6 OF 6

DRAWING NO. **17805-PI-GAD-900** REV **B**

FILE: \\srv-fs01\shared\Shared\Customers\CRW Engineering\17805 Wrangell AK\5 Engineering\5.13 Piping\5.13.H Diagrams & Dwgs (2D)\5.13.H.1 GAs & Elev Dwgs

REFERENCE DRAWINGS

1. FLOW DISTRIBUTOR GENERAL ARRANGEMENT: 17805-PI-GAD-100
2. DAF GENERAL ARRANGEMENT: 17805-PI-GAD-200
3. FILTER GENERAL ARRANGEMENT: 17805-PI-GAD-300,
4. RECYCLE SKID GENERAL ARRANGEMENT: 17805-PI-GAD-400
5. PLATFORM & STAIR GENERAL ARRANGEMENT: 17805-PI-GAD-900

GENERAL

1. DIMENSIONS ARE SHOWN IN INCHES UNLESS STATED OTHERWISE
2. DIMENSIONS SHOWN ARE PRELIMINARY AND NOT TO BE CONSIDERED FINAL.

ENGINEERING, STANDARDS & SPECIFICATION

1. AWC WILL PERFORM SEISMIC ANCHOR SIZING AS PER THE SPECIFICATIONS AND APPLICABLE GOVERNING CODES AND STANDARDS.
2. AWC WILL PROVIDE STAMPED ANCHOR DETAILS SHOWING THE REQUIRED REACTION FORCES INCLUDING THE ANCHOR BOLT SIZE, MATERIAL, AND GRADE.
3. ALL CALCULATIONS AND DESIGN RELATED TO CONCRETE INCLUDING STRENGTH, ANCHOR BOLT EMBEDMENT DEPTH, AND EPOXY SELECTION BY OTHERS.

INSTALLATION

1. ISOLATION MEMBRANE IS REQUIRED BETWEEN THE CONCRETE FLOOR AND THE BOTTOM OF THE TANK BASEPLATE. MEMBRANE TO BE SUPPLIED AND INSTALLED BY OTHERS.
2. SEISMIC ANCHOR BOLTS TO BE SUPPLIED AND INSTALLED BY OTHERS.
3. ANY INTERCONNECTING PIPING BETWEEN AWC'S EQUIPMENT AND THE WTP TO BE DESIGNED, SUPPLIED & INSTALLED BY OTHERS.

SHEET INDEX:

1: GENERAL NOTES
2: TANK PLAN
3: HOUSEKEEPING PAD
4: TRENCH PLAN

NOTES:

ENGINEER'S SEAL

PRELIMINARY
NOT FOR CONSTRUCTION

THE INFORMATION ON THIS DRAWING IS INTENDED FOR CONCEPTUAL DEVELOPMENT, PRELIMINARY DESIGN, OR FOR GUIDANCE ONLY. THIS DOCUMENT SHOULD NOT BE CONSIDERED A FINALIZED PROFESSIONAL WORK PRODUCT.

REV	DESCRIPTION	DATE	BY	CHK	APP
B	RE-ISSUED FOR REVIEW	22-FEB-23	RS	JEW	TC
A	ISSUED FOR REVIEW	21-FEB-23	RS	JE	TC

REVISIONS

9087A 198 Street Langley, BC Canada V1M 3B1
Phone : 604-638-0760 Fax: 604-638-0795
www.awcsolutions.ca

THIS DRAWING IS THE PROPERTY OF AWC AND CONTAINS PROPRIETARY AND CONFIDENTIAL INFORMATION WHICH MUST NOT BE DUPLICATED, USED OR DISCLOSED OTHER THAN EXPRESSLY AUTHORIZED BY AWC.

CLIENT: CITY & BOROUGH OF WRANGELL
PROJECT: WRANGELL WTP
TITLE: PLANT LAYOUT
SCALE: NTS | PROJECTION | DEFAULT UNITS: IN | SHEET SIZE: 17 x 11 | SHEET: 1 OF 4
DRAWING NO.: **17805-PI-LAY-001** | REV: **B**

FILE: \\srv-fs01\shared\Shared\Customers\CRW Engineering\17805 Wrangell AK\5 Engineering\5.13 Piping\5.13.H Diagrams & Dwgs (2D)\5.13.H.1 GAs & Elev Dwgs

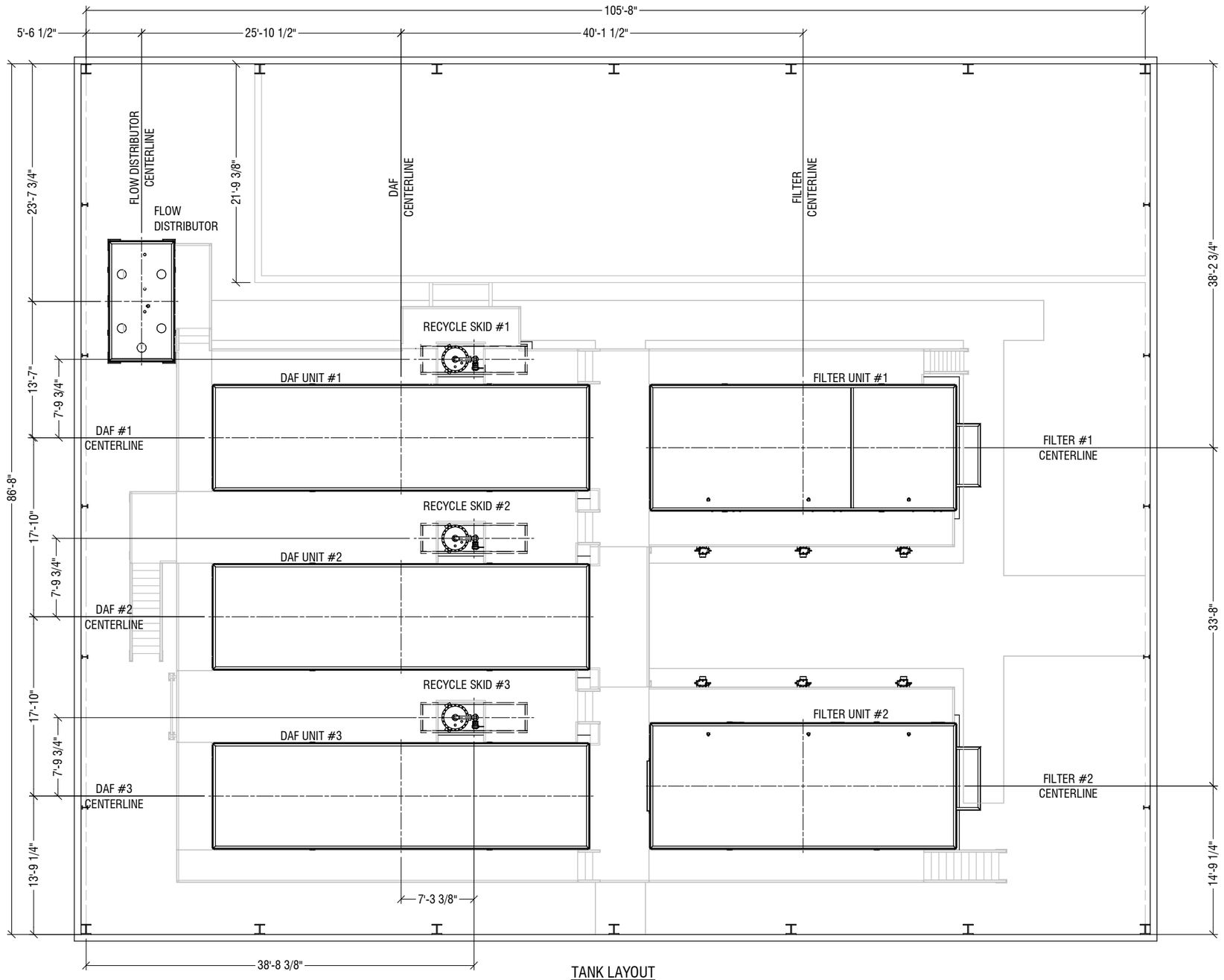

TANK LAYOUT

NOTES:

ENGINEER'S SEAL

PRELIMINARY
NOT FOR CONSTRUCTION

THE INFORMATION ON THIS DRAWING IS INTENDED FOR CONCEPTUAL DEVELOPMENT, PRELIMINARY DESIGN, OR FOR GUIDANCE ONLY. THIS DOCUMENT SHOULD NOT BE CONSIDERED A FINALIZED PROFESSIONAL WORK PRODUCT.

REV	DESCRIPTION	DATE	BY	CHK	APP
B	RE-ISSUED FOR REVIEW	22-FEB-23	~~RS~~	~~SBW~~	~~TC~~
A	ISSUED FOR REVIEW	21-FEB-23	RS	JE	TC

REVISIONS

9087A 198 Street Langley, BC Canada V1M 3B1
Phone : 604-638-0760 Fax: 604-638-0795
www.awcsolutions.ca

THIS DRAWING IS THE PROPERTY OF AWC AND CONTAINS PROPRIETARY AND CONFIDENTIAL INFORMATION WHICH MUST NOT BE DUPLICATED, USED OR DISCLOSED OTHER THAN EXPRESSLY AUTHORIZED BY AWC.

CLIENT: CITY & BOROUGH OF WRANGELL
PROJECT: WRANGELL WTP
TITLE: PLANT LAYOUT

SCALE	PROJECTION	DEFAULT UNITS	SHEET SIZE	SHEET
NTS		IN	17 x 11	2 OF 4

DRAWING NO. **17805-PI-LAY-001** REV **B**

FILE: \\srv-fs01\shared\Shared\Customers\CRW Engineering\17805 Wrangell AK\5 Engineering\5.13 Piping\5.13.H Diagrams & Dwgs (2D)\5.13.H.1 GAs & Elev Dwgs

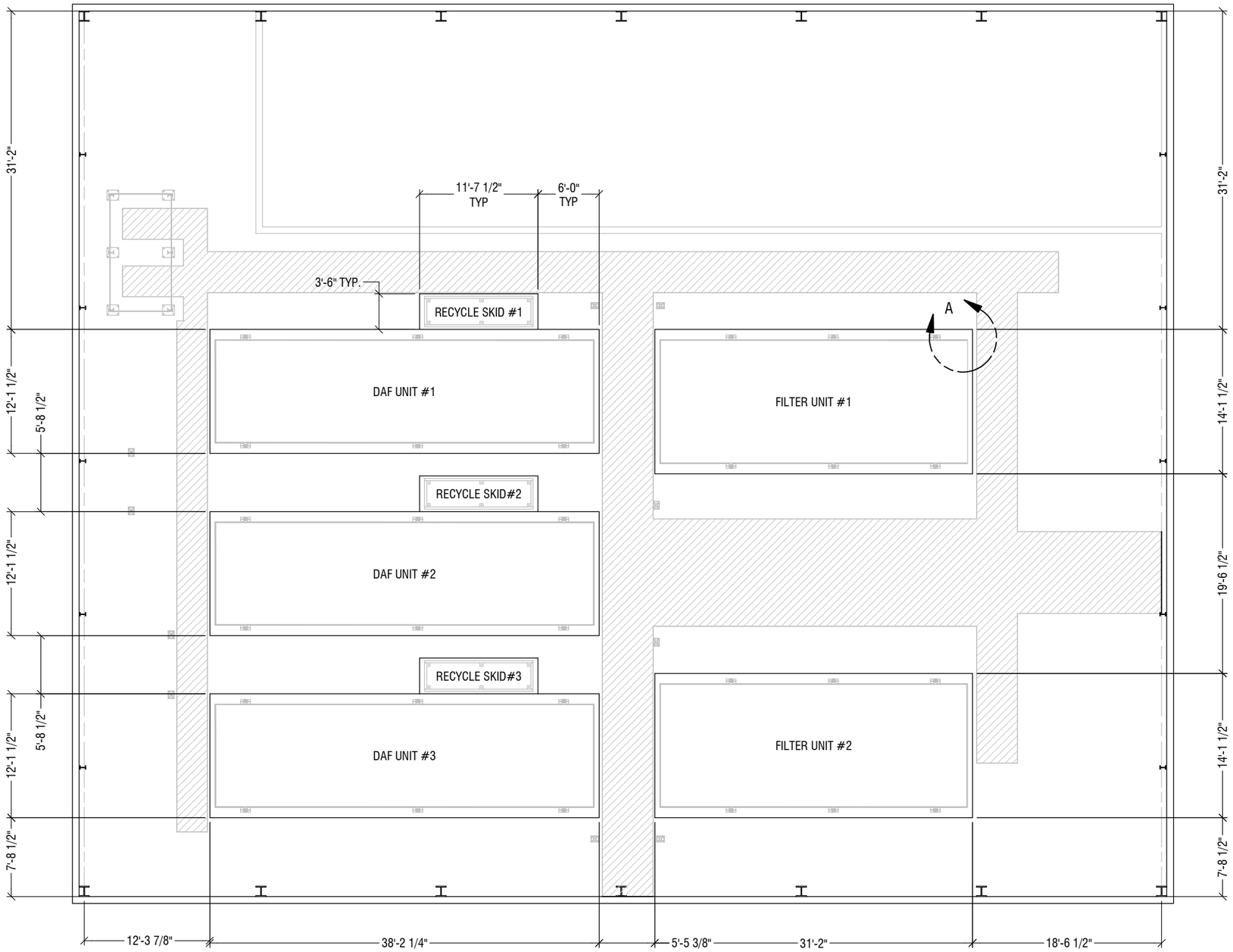

HOUSEKEEPING PAD PLAN

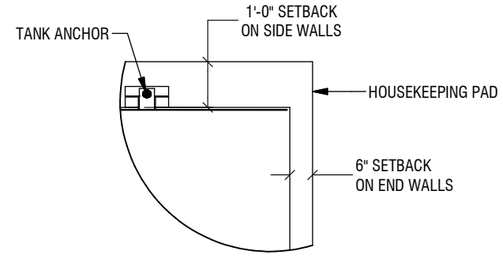

DETAIL A - PLAN VIEW
TANK SETBACKS FROM HOUSEKEEPING PADS
TYP. FOR ALL TANKS

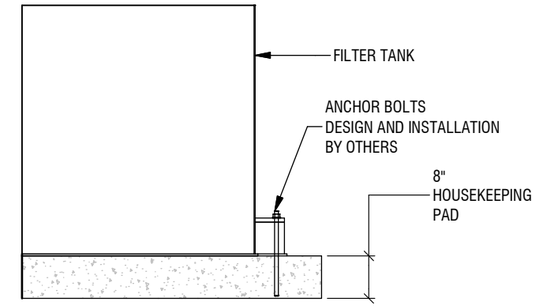

FILTER UNIT BASE

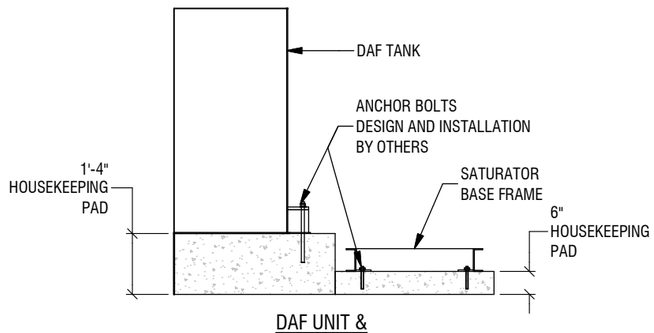

DAF UNIT &
SATURATOR BASE

NOTES:

ENGINEER'S SEAL

PRELIMINARY
NOT FOR CONSTRUCTION

THE INFORMATION ON THIS DRAWING IS INTENDED FOR CONCEPTUAL DEVELOPMENT, PRELIMINARY DESIGN, OR FOR GUIDANCE ONLY. THIS DOCUMENT SHOULD NOT BE CONSIDERED A FINALIZED PROFESSIONAL WORK PRODUCT.

REV	DESCRIPTION	DATE	BY	CHK	APP
B	RE-ISSUED FOR REVIEW	22-FEB-23	RS	JE	TC
A	ISSUED FOR REVIEW	21-FEB-23	RS	JE	TC

REVISIONS

AWC
9087A 198 Street Langley, BC Canada V1M 3B1
Phone : 604-638-0760 Fax: 604-638-0795
www.awcsolutions.ca

THIS DRAWING IS THE PROPERTY OF AWC AND CONTAINS PROPRIETARY AND CONFIDENTIAL INFORMATION WHICH MUST NOT BE DUPLICATED, USED OR DISCLOSED OTHER THAN EXPRESSLY AUTHORIZED BY AWC.

CLIENT: CITY & BOROUGH OF WRANGELL
PROJECT: WRANGELL WTP
TITLE: PLANT LAYOUT
SCALE: NTS | PROJECTION | DEFAULT UNITS: IN | SHEET SIZE: 17 x 11 | SHEET: 3 OF 4
DRAWING NO.: **17805-PI-LAY-001** | REV: **B**

FILE: \\srv-fs01\shared\Shared\Customers\CRW Engineering\17805 Wrangell AK\5 Engineering\5.13 Piping\5.13.H Diagrams & Dwgs (2D)\5.13.H.1 GAs & Elev Dwgs

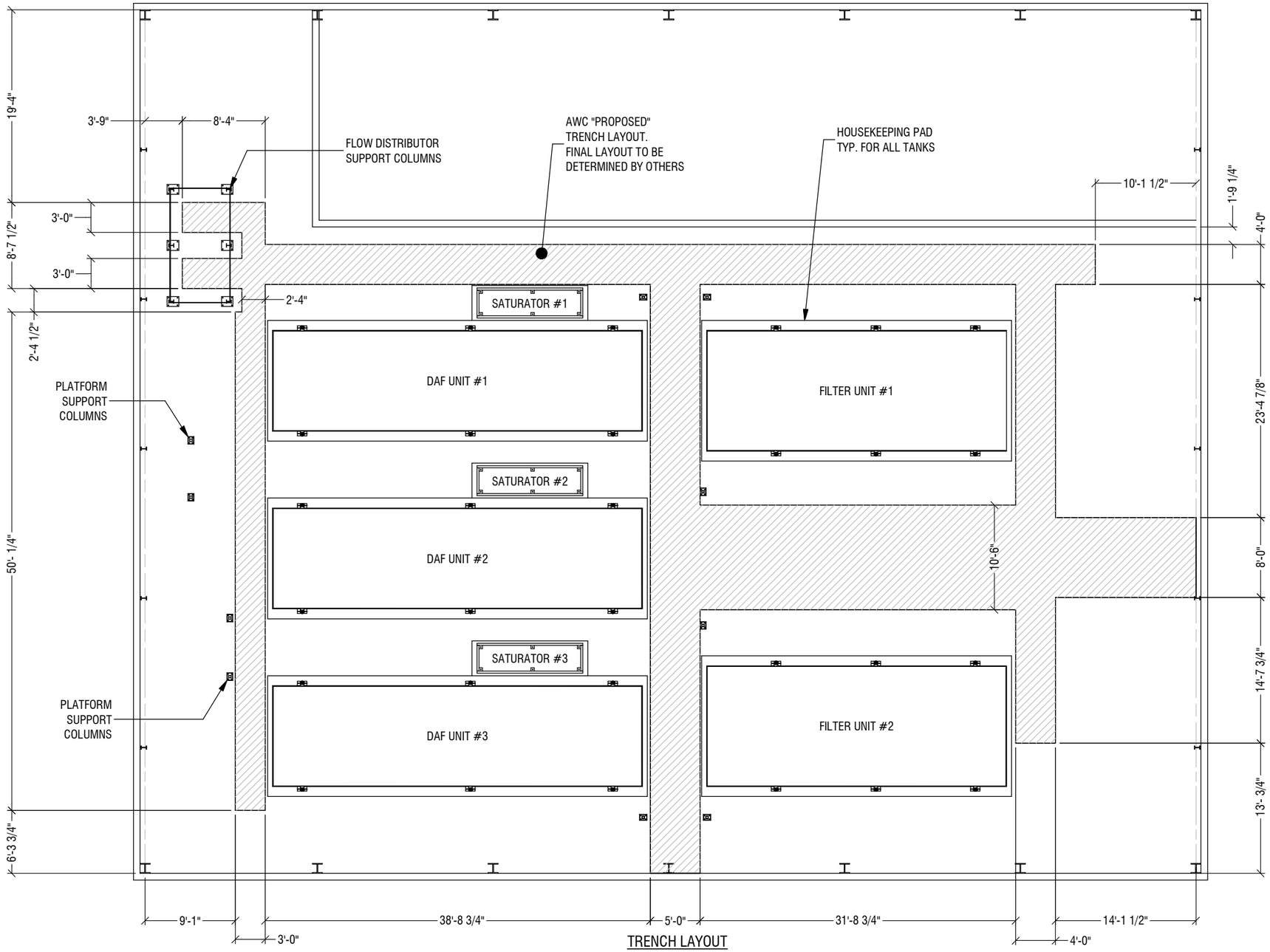

TRENCH LAYOUT
(FOR REFERENCE ONLY)

B

NOTES:
1. LAYOUT OF TRENCHES SHOWN ARE BASED ON CLIENTS 3D REVIT MODEL, "CBW WTP REVIT AND CAD FILES" PROVIDED TO AWC ON 17-FEB-23. TRENCHES ARE SHOWN HERE FOR REFERENCE ONLY AND TO INDICATED CLEARANCES AROUND AWC 'S PACKAGED EQUIPMENT AND PLATFORM SUPPORT COLUMNS.
2. REFER TO WALKWAYS & STAIR GENERAL ARRANGEMENT, 17805-PI-GAD-900 FOR PLATFORM COLUMN LOCATIONS AND DETAILS.

ENGINEER'S SEAL

PRELIMINARY
NOT FOR CONSTRUCTION

THE INFORMATION ON THIS DRAWING IS INTENDED FOR CONCEPTUAL DEVELOPMENT, PRELIMINARY DESIGN, OR FOR GUIDANCE ONLY. THIS DOCUMENT SHOULD NOT BE CONSIDERED A FINALIZED PROFESSIONAL WORK PRODUCT.

REV	DESCRIPTION	DATE	BY	CHK	APP
B	RE-ISSUED FOR REVIEW	22-FEB-23	RS	SBW	TC
A	ISSUED FOR REVIEW	21-FEB-23	RS	JE	TC

REVISIONS

9087A 198 Street Langley, BC Canada V1M 3B1
Phone : 604-638-0760 Fax: 604-638-0795
www.awcsolutions.ca

THIS DRAWING IS THE PROPERTY OF AWC AND CONTAINS PROPRIETARY AND CONFIDENTIAL INFORMATION WHICH MUST NOT BE DUPLICATED, USED OR DISCLOSED OTHER THAN EXPRESSLY AUTHORIZED BY AWC.

CLIENT: CITY & BOROUGH OF WRANGELL
PROJECT: WRANGELL WTP
TITLE: PLANT LAYOUT
SCALE: NTS | PROJECTION | DEFAULT UNITS: IN | SHEET SIZE: 17 x 11 | SHEET: 4 OF 4
DRAWING NO.: **17805-PI-LAY-001** | REV: **B**

FILE: \\srv-fs01\shared\Shared\Customers\CRW Engineering\17805 Wrangell AK\5 Engineering\5.13 Piping\5.13.H Diagrams & Dwgs (2D)\5.13.H.1 GAs & Elev Dwgs

Tie-in Number	Service	Line Number	PFD	P&ID	Area or Location	Location - INCH			Connection Type	Connection Size	Piping Material Specification	Pipe Schedule	NDT Type	Test Type	Test Pressure (PSIG)	Insulation Type	Heat Tracing Type	Notes
						CL Elev.	Northing	Easting										
01-TP-020	RAW WATER SUPPLY INLET	01-FV-014	-	17805-PR-PID-001	RAPID MIX TANK 01-TK-020	-	-	-	FLANGED, 150# FF	14"	PVC (BY OTHERS)	80	-	LEAK TEST	10	NONE	NONE	
01-TP-023	RAW WATER SUPPLY TO DAF TRAIN 1	BY OTHERS	-	17805-PR-PID-001	FLOW DISTRIBUTION TANK 01-TK-023	-	-	-	FLANGED, 150# FF	10"	PVC (BY OTHERS)	80	-	LEAK TEST	2	NONE	NONE	
01-TP-024	RAW WATER SUPPLY TO DAF TRAIN 2	BY OTHERS	-	17805-PR-PID-001	FLOW DISTRIBUTION TANK 01-TK-023	-	-	-	FLANGED, 150# FF	10"	PVC (BY OTHERS)	80	-	LEAK TEST	2	NONE	NONE	
01-TP-025	RAW WATER SUPPLY TO DAF TRAIN 3	BY OTHERS	-	17805-PR-PID-001	FLOW DISTRIBUTION TANK 01-TK-023	-	-	-	FLANGED, 150# FF	10"	PVC (BY OTHERS)	80	-	LEAK TEST	2	NONE	NONE	
01-TP-026	OVERFLOW TO WASTE	BY OTHERS	-	17805-PR-PID-001	FLOW DISTRIBUTION TANK 01-TK-023	-	-	-	FLANGED, 150# FF	10"	PVC (BY OTHERS)	80	-	LEAK TEST	1	NONE	NONE	
01-TP-027	OVERFLOW TO WASTE	BY OTHERS	-	17805-PR-PID-001	FLOW DISTRIBUTION TANK 01-TK-023	-	-	-	FLANGED, 150# FF	10"	PVC (BY OTHERS)	80	-	LEAK TEST	1	NONE	NONE	
02-TP-100	RAW WATER FROM RAPID MIXER	02-XV-104	-	17805-PR-PID-002-1	DAF TANK 1	-	-	-	FLANGED, 150# FF	10"	PVC (BY OTHERS)	80	-	LEAK TEST	5	NONE	NONE	
02-TP-110	RECYCLE SUPPLY FROM SATURATOR 1	02-HV-1101	-	17805-PR-PID-002-1	DAF TANK 1	-	-	-	FLANGED, 150# FF	2-1/2"	SS (BY OTHERS)	10	-	LEAK TEST	85	NONE	NONE	
02-TP-111	RECYCLE SUPPLY FROM SATURATOR 1	02-HV-1102	-	17805-PR-PID-002-1	DAF TANK 1	-	-	-	FLANGED, 150# FF	3"	SS (BY OTHERS)	10	-	LEAK TEST	85	NONE	NONE	
02-TP-113	DOMESTIC WATER SUPPLY	02-HV-1104	-	17805-PR-PID-002-1	DAF TANK 1	-	-	-	NPT	3/4"	PVC (BY OTHERS)	80	-	LEAK TEST	40	NONE	NONE	
02-TP-115	DAF FLOAT SEWAGE	BY OTHERS	-	17805-PR-PID-002-1	DAF TANK 1	-	-	-	FLANGED, 150# FF	4"	PVC (BY OTHERS)	80	-	LEAK TEST	5	NONE	NONE	
02-TP-116	DAF TRAIN 1 EFFLUENT TO FILTER	02-HV-1192	-	17805-PR-PID-002-1	DAF TANK 1	-	-	-	FLANGED, 150# FF	10"	PVC (BY OTHERS)	80	-	LEAK TEST	5	NONE	NONE	
02-TP-117	OVERFLOW TO WASTE	BY OTHERS	-	17805-PR-PID-002-1	DAF TANK 1	-	-	-	FLANGED, 150# FF	10"	PVC (BY OTHERS)	80	-	LEAK TEST	1	NONE	NONE	
02-TP-119	RECYCLE SUPPLY TO RECYCLE PUMP	02-HV-1190	-	17805-PR-PID-002-1	DAF TANK 1	-	-	-	FLANGED, 150# FF	4"	PVC (BY OTHERS)	80	-	LEAK TEST	5	NONE	NONE	
02-TP-200	RAW WATER FROM RAPID MIXER	02-XV-204	-	17805-PR-PID-002-2	DAF TANK 2	-	-	-	FLANGED, 150# FF	10"	PVC (BY OTHERS)	80	-	LEAK TEST	5	NONE	NONE	
02-TP-210	RECYCLE SUPPLY FROM SATURATOR 2	02-HV-2101	-	17805-PR-PID-002-2	DAF TANK 2	-	-	-	FLANGED, 150# FF	2-1/2"	SS (BY OTHERS)	10	-	LEAK TEST	85	NONE	NONE	
02-TP-211	RECYCLE SUPPLY FROM SATURATOR 2	02-HV-2102	-	17805-PR-PID-002-2	DAF TANK 2	-	-	-	FLANGED, 150# FF	3"	SS (BY OTHERS)	10	-	LEAK TEST	85	NONE	NONE	
02-TP-213	DOMESTIC WATER SUPPLY	02-HV-2104	-	17805-PR-PID-002-2	DAF TANK 2	-	-	-	NPT	3/4"	PVC (BY OTHERS)	80	-	LEAK TEST	40	NONE	NONE	
02-TP-215	DAF FLOAT SEWAGE	BY OTHERS	-	17805-PR-PID-002-2	DAF TANK 2	-	-	-	FLANGED, 150# FF	4"	PVC (BY OTHERS)	80	-	LEAK TEST	5	NONE	NONE	
02-TP-216	DAF TRAIN 2 EFFLUENT TO FILTER	02-HV-2192	-	17805-PR-PID-002-2	DAF TANK 2	-	-	-	FLANGED, 150# FF	10"	PVC (BY OTHERS)	80	-	LEAK TEST	5	NONE	NONE	
02-TP-217	OVERFLOW TO WASTE	BY OTHERS	-	17805-PR-PID-002-2	DAF TANK 2	-	-	-	FLANGED, 150# FF	10"	PVC (BY OTHERS)	80	-	LEAK TEST	1	NONE	NONE	
02-TP-219	RECYCLE SUPPLY TO RECYCLE PUMP	02-HV-2190	-	17805-PR-PID-002-2	DAF TANK 2	-	-	-	FLANGED, 150# FF	4"	PVC (BY OTHERS)	80	-	LEAK TEST	5	NONE	NONE	
02-TP-300	RAW WATER FROM RAPID MIXER	02-XV-304	-	17805-PR-PID-002-3	DAF TANK 3	-	-	-	FLANGED, 150# FF	10"	PVC (BY OTHERS)	80	-	LEAK TEST	5	NONE	NONE	
02-TP-310	RECYCLE SUPPLY FROM SATURATOR 3	02-HV-3101	-	17805-PR-PID-002-3	DAF TANK 3	-	-	-	FLANGED, 150# FF	2-1/2"	SS (BY OTHERS)	10	-	LEAK TEST	85	NONE	NONE	
02-TP-311	RECYCLE SUPPLY FROM SATURATOR 3	02-HV-3102	-	17805-PR-PID-002-3	DAF TANK 3	-	-	-	FLANGED, 150# FF	3"	SS (BY OTHERS)	10	-	LEAK TEST	85	NONE	NONE	
02-TP-313	DOMESTIC WATER SUPPLY	02-HV-3104	-	17805-PR-PID-002-3	DAF TANK 3	-	-	-	NPT	3/4"	PVC (BY OTHERS)	80	-	LEAK TEST	40	NONE	NONE	
02-TP-315	DAF FLOAT SEWAGE	BY OTHERS	-	17805-PR-PID-002-3	DAF TANK 3	-	-	-	FLANGED, 150# FF	4"	PVC (BY OTHERS)	80	-	LEAK TEST	5	NONE	NONE	
02-TP-316	DAF TRAIN 3 EFFLUENT TO FILTER	02-HV-3192	-	17805-PR-PID-002-3	DAF TANK 3	-	-	-	FLANGED, 150# FF	10"	PVC (BY OTHERS)	80	-	LEAK TEST	5	NONE	NONE	
02-TP-317	OVERFLOW TO WASTE	BY OTHERS	-	17805-PR-PID-002-3	DAF TANK 3	-	-	-	FLANGED, 150# FF	10"	PVC (BY OTHERS)	80	-	LEAK TEST	1	NONE	NONE	
02-TP-319	RECYCLE SUPPLY TO RECYCLE PUMP	02-HV-3190	-	17805-PR-PID-002-3	DAF TANK 3	-	-	-	FLANGED, 150# FF	4"	PVC (BY OTHERS)	80	-	LEAK TEST	5	NONE	NONE	
02-TP-120	RECYCLE SUPPLY FROM DAF TRAIN 1	4"-TW-101-SS4	-	17805-PR-PID-003-1	RECYCLE SKID 1	-	-	-	FLANGED, 150# FF	4"	SS	10	-	LEAK TEST	5	NONE	NONE	
02-TP-125	PSV DISCHARGE	02-PSV-127	-	17805-PR-PID-003-1	RECYCLE SKID 1	-	-	-	NPT	3/4"	SS (BY OTHERS)	10	-	LEAK TEST	150	NONE	NONE	
02-TP-126	COMPRESSED AIR FROM RECEIVER	1/2"-PA-801-SS4	-	17805-PR-PID-003-1	RECYCLE SKID 1	-	-	-	NPT	1/2"	SS	10	-	SERVICE TEST	120	NONE	NONE	
02-TP-127	RECYCLE RETURN TO DAF TRAIN 1	4"-TW-111-SS4	-	17805-PR-PID-003-1	RECYCLE SKID 1	-	-	-	FLANGED, 150# FF	4"	SS	10	-	LEAK TEST	85	NONE	NONE	
02-TP-220	RECYCLE SUPPLY FROM DAF TRAIN 2	4"-TW-201-SS4	-	17805-PR-PID-003-2	RECYCLE SKID 2	-	-	-	FLANGED, 150# FF	4"	SS	10	-	LEAK TEST	5	NONE	NONE	
02-TP-225	PSV DISCHARGE	02-PSV-227	-	17805-PR-PID-003-2	RECYCLE SKID 2	-	-	-	NPT	3/4"	SS (BY OTHERS)	10	-	LEAK TEST	150	NONE	NONE	
02-TP-226	COMPRESSED AIR FROM RECEIVER	1/2"-PA-802-SS4	-	17805-PR-PID-003-2	RECYCLE SKID 2	-	-	-	NPT	1/2"	SS	10	-	SERVICE TEST	120	NONE	NONE	
02-TP-227	RECYCLE RETURN TO DAF TRAIN 2	4"-TW-211-SS4	-	17805-PR-PID-003-2	RECYCLE SKID 2	-	-	-	FLANGED, 150# FF	4"	SS	10	-	LEAK TEST	85	NONE	NONE	
02-TP-320	RECYCLE SUPPLY FROM DAF TRAIN 3	4"-TW-301-SS4	-	17805-PR-PID-003-3	RECYCLE SKID 3	-	-	-	FLANGED, 150# FF	4"	SS	10	-	LEAK TEST	5	NONE	NONE	
02-TP-325	PSV DISCHARGE	02-PSV-327	-	17805-PR-PID-003-3	RECYCLE SKID 3	-	-	-	NPT	3/4"	SS (BY OTHERS)	10	-	LEAK TEST	150	NONE	NONE	
02-TP-326	COMPRESSED AIR FROM RECEIVER	1/2"-PA-803-SS4	-	17805-PR-PID-003-3	RECYCLE SKID 3	-	-	-	NPT	1/2"	SS	10	-	SERVICE TEST	120	NONE	NONE	
02-TP-327	RECYCLE RETURN TO DAF TRAIN 3	4"-TW-311-SS4	-	17805-PR-PID-003-3	RECYCLE SKID 3	-	-	-	FLANGED, 150# FF	4"	SS	10	-	LEAK TEST	85	NONE	NONE	
08-TP-815	COMPRESSED AIR FROM RECEIVER	08-HV-8151	-	17805-PR-PID-004	AIR COMPRESSOR	-	-	-	NPT	1"	SS (BY OTHERS)	10	-	SERVICE TEST	120	NONE	NONE	
03-TP-140	CLARIFIED WATER FROM DAF MANIFOLD	03-XV-140	-	17805-PR-PID-006-1	FILTER TANK 1	-	-	-	FLANGED, 150# FF	6"	PVC (BY OTHERS)	80	-	LEAK TEST	1	NONE	NONE	
03-TP-141	AIR SCOUR INLET	03-XV-142	-	17805-PR-PID-006-1	FILTER TANK 1	-	-	-	FLANGED, 150# FF	6"	SS (BY OTHERS)	10	-	SERVICE TEST	4.5	NONE	NONE	
03-TP-145	TURBIDIMETER DRAIN	03-HV-1406	-	17805-PR-PID-006-1	FILTER TANK 1	-	-	-	NPT	1/4"	PVC (BY OTHERS)	80	-	LEAK TEST	4.3	NONE	NONE	
03-TP-160	CLARIFIED WATER FROM DAF MANIFOLD	03-XV-160	-	17805-PR-PID-006-1	FILTER TANK 2	-	-	-	FLANGED, 150# FF	6"	PVC (BY OTHERS)	80	-	LEAK TEST	1	NONE	NONE	
03-TP-161	AIR SCOUR INLET	03-XV-162	-	17805-PR-PID-006-1	FILTER TANK 2	-	-	-	FLANGED, 150# FF	6"	SS (BY OTHERS)	10	-	SERVICE TEST	4.5	NONE	NONE	

NOTES:
1. WHEN LINE NUMBER IS NOT AVAILABLE, TIE-IN ISOLATION VALVE NUMBER IS SPECIFIED

ENGINEERS SEAL

REV	DESCRIPTION	DATE	DFT	CHK	APP
B	Issued for Approval	08-Feb-23	JE	VD	AA
A	Issued for Approval	23-Jan-23	JE	VD	AA

REVISIONS

9087A 198 Street Langley, BC Canada V1M 3B1
Phone : 604-936-4217
www.awcsolutions.com

THIS DRAWING IS THE PROPERTY OF AWC AND CONTAINS PROPRIETARY AND CONFIDENTIAL INFORMATION WHICH MUST NOT BE DUPLICATED, USED OR DISCLOSED OTHER THAN EXPRESSLY AUTHORIZED BY AWC.

CLIENT	CITY AND BUROUGH OF WRANGELL
PROJECT	WRANGELL WTP
TITLE	TIE-IN LIST AND SCHEDULE
SCALE	NTS
PROJECTION	
DEFAULT UNITS	in
SHEET SIZE	17 x 11
SHEET	1 OF 2
DRAWING NO.	17805-PI-LST-001
REV	B

Tie-in Number	Service	Line Number	PFD	P&ID	Area or Location	Location - INCH			Connection Type	Connection Size	Piping Material Specification	Pipe Schedule	NDT Type	Test Type	Test Pressure (PSIG)	Insulation Type	Heat Tracing Type	Notes
						CL Elev.	Northing	Easting										
03-TP-165	TURBIDIMETER DRAIN	03-HV-1606	-	17805-PR-PID-006-1	FILTER TANK 2	-	-	-	NPT	1/4"	PVC (BY OTHERS)	80	-	LEAK TEST	4.3	NONE	NONE	
03-TP-180	CLARIFIED WATER FROM DAF MANIFOLD	03-XV-180	-	17805-PR-PID-006-1	FILTER TANK 3	-	-	-	FLANGED, 150# FF	6"	PVC (BY OTHERS)	80	-	LEAK TEST	14.5	NONE	NONE	
03-TP-181	AIR SCOUR INLET	03-XV-182	-	17805-PR-PID-006-1	FILTER TANK 3	-	-	-	FLANGED, 150# FF	6"	SS (BY OTHERS)	10	-	SERVICE TEST	4.5	NONE	NONE	
03-TP-185	TURBIDIMETER DRAIN	03-HV-1806	-	17805-PR-PID-006-1	FILTER TANK 3	-	-	-	NPT	1/4"	PVC (BY OTHERS)	80	-	LEAK TEST	4.3	NONE	NONE	
03-TP-190	BACKWASH TO EQ TANK	BY OTHERS	-	17805-PR-PID-006-1	FILTER TANK 1/2/3	-	-	-	FLANGED, 150# FF	16"	PVC (BY OTHERS)	80	-	LEAK TEST	1	NONE	NONE	
03-TP-142	EFFLUENT TO CLEARWELL	6"-TW-143-SS4	-	17805-PR-PID-006-2	FILTER TANK 1	-	-	-	FLANGED, 150# FF	6"	SS	10	-	LEAK TEST	4.3	NONE	NONE	
03-TP-143	RINSE TO WASTE	6"-WW-142-SS4	-	17805-PR-PID-006-2	FILTER TANK 1	-	-	-	FLANGED, 150# FF	6"	SS	10	-	LEAK TEST	4.3	NONE	NONE	
03-TP-144	BACKWASH SUPPLY	12"-TW-141-SS4	-	17805-PR-PID-006-2	FILTER TANK 1	-	-	-	FLANGED, 150# FF	12"	SS	10	-	LEAK TEST	7.5	NONE	NONE	
03-TP-162	EFFLUENT TO CLEARWELL	6"-TW-163-SS4	-	17805-PR-PID-006-2	FILTER TANK 2	-	-	-	FLANGED, 150# FF	6"	SS	10	-	LEAK TEST	4.3	NONE	NONE	
03-TP-163	RINSE TO WASTE	6"-WW-162-SS4	-	17805-PR-PID-006-2	FILTER TANK 2	-	-	-	FLANGED, 150# FF	6"	SS	10	-	LEAK TEST	4.3	NONE	NONE	
03-TP-164	BACKWASH SUPPLY	12"-TW-161-SS4	-	17805-PR-PID-006-2	FILTER TANK 2	-	-	-	FLANGED, 150# FF	12"	SS	10	-	LEAK TEST	7.5	NONE	NONE	
03-TP-182	EFFLUENT TO CLEARWELL	6"-TW-183-SS4	-	17805-PR-PID-006-2	FILTER TANK 3	-	-	-	FLANGED, 150# FF	6"	SS	10	-	LEAK TEST	4.3	NONE	NONE	
03-TP-183	RINSE TO WASTE	6"-WW-182-SS4	-	17805-PR-PID-006-2	FILTER TANK 3	-	-	-	FLANGED, 150# FF	6"	SS	10	-	LEAK TEST	4.3	NONE	NONE	
03-TP-184	BACKWASH SUPPLY	12"-TW-181-SS4	-	17805-PR-PID-006-2	FILTER TANK 3	-	-	-	FLANGED, 150# FF	12"	SS	10	-	LEAK TEST	7.5	NONE	NONE	
03-TP-240	CLARIFIED WATER FROM DAF MANIFOLD	03-XV-240	-	17805-PR-PID-007-1	FILTER TANK 4	-	-	-	FLANGED, 150# FF	6"	PVC (BY OTHERS)	80	-	LEAK TEST	1	NONE	NONE	
03-TP-241	AIR SCOUR INLET	03-XV-242	-	17805-PR-PID-007-1	FILTER TANK 4	-	-	-	FLANGED, 150# FF	6"	SS (BY OTHERS)	10	-	SERVICE TEST	4.5	NONE	NONE	
03-TP-245	TURBIDIMETER DRAIN	03-HV-2406	-	17805-PR-PID-007-1	FILTER TANK 4	-	-	-	NPT	1/4"	PVC (BY OTHERS)	80	-	LEAK TEST	4.3	NONE	NONE	
03-TP-260	CLARIFIED WATER FROM DAF MANIFOLD	03-XV-260	-	17805-PR-PID-007-1	FILTER TANK 5	-	-	-	FLANGED, 150# FF	6"	PVC (BY OTHERS)	80	-	LEAK TEST	1	NONE	NONE	
03-TP-261	AIR SCOUR INLET	03-XV-262	-	17805-PR-PID-007-1	FILTER TANK 5	-	-	-	FLANGED, 150# FF	6"	SS (BY OTHERS)	10	-	SERVICE TEST	4.5	NONE	NONE	
03-TP-265	TURBIDIMETER DRAIN	03-HV-2606	-	17805-PR-PID-007-1	FILTER TANK 5	-	-	-	NPT	1/4"	PVC (BY OTHERS)	80	-	LEAK TEST	4.3	NONE	NONE	
03-TP-280	CLARIFIED WATER FROM DAF MANIFOLD	03-XV-280	-	17805-PR-PID-007-1	FILTER TANK 6	-	-	-	FLANGED, 150# FF	6"	PVC (BY OTHERS)	80	-	LEAK TEST	1	NONE	NONE	
03-TP-281	AIR SCOUR INLET	03-XV-282	-	17805-PR-PID-007-1	FILTER TANK 6	-	-	-	FLANGED, 150# FF	6"	SS (BY OTHERS)	10	-	SERVICE TEST	4.5	NONE	NONE	
03-TP-285	TURBIDIMETER DRAIN	03-HV-2806	-	17805-PR-PID-007-1	FILTER TANK 6	-	-	-	NPT	1/4"	PVC (BY OTHERS)	80	-	LEAK TEST	4.3	NONE	NONE	
03-TP-290	BACKWASH TO EQ TANK	BY OTHERS	-	17805-PR-PID-007-1	FILTER TANK 4/5/6	-	-	-	FLANGED, 150# FF	16"	PVC (BY OTHERS)	80	-	LEAK TEST	1	NONE	NONE	
03-TP-242	EFFLUENT TO CLEARWELL	6"-TW-243-SS4	-	17805-PR-PID-007-2	FILTER TANK 4	-	-	-	FLANGED, 150# FF	6"	SS	10	-	LEAK TEST	4.3	NONE	NONE	
03-TP-243	RINSE TO WASTE	6"-WW-242-SS4	-	17805-PR-PID-007-2	FILTER TANK 4	-	-	-	FLANGED, 150# FF	6"	SS	10	-	LEAK TEST	4.3	NONE	NONE	
03-TP-244	BACK WASH SUPPLY	12"-TW-241-SS4	-	17805-PR-PID-007-2	FILTER TANK 4	-	-	-	FLANGED, 150# FF	12"	SS	10	-	LEAK TEST	7.5	NONE	NONE	
03-TP-262	EFFLUENT TO CLEARWELL	6"-TW-263-SS4	-	17805-PR-PID-007-2	FILTER TANK 5	-	-	-	FLANGED, 150# FF	6"	SS	10	-	LEAK TEST	4.3	NONE	NONE	
03-TP-263	RINSE TO WASTE	6"-WW-262-SS4	-	17805-PR-PID-007-2	FILTER TANK 5	-	-	-	FLANGED, 150# FF	6"	SS	10	-	LEAK TEST	4.3	NONE	NONE	
03-TP-264	BACKWASH SUPPLY	12"-TW-261-SS4	-	17805-PR-PID-007-2	FILTER TANK 5	-	-	-	FLANGED, 150# FF	12"	SS	10	-	LEAK TEST	7.5	NONE	NONE	
03-TP-282	EFFLUENT TO CLEARWELL	6"-TW-283-SS4	-	17805-PR-PID-007-2	FILTER TANK 6	-	-	-	FLANGED, 150# FF	6"	SS	10	-	LEAK TEST	4.3	NONE	NONE	
03-TP-283	RINSE TO WASTE	6"-WW-282-SS4	-	17805-PR-PID-007-2	FILTER TANK 6	-	-	-	FLANGED, 150# FF	6"	SS	10	-	LEAK TEST	4.3	NONE	NONE	
03-TP-284	BACKWASH SUPPLY	12"-TW-281-SS4	-	17805-PR-PID-007-2	FILTER TANK 6	-	-	-	FLANGED, 150# FF	12"	SS	10	-	LEAK TEST	7.5	NONE	NONE	

NOTES:
1. WHEN LINE NUMBER IS NOT AVAILABLE, TIE-IN ISOLATION VALVE NUMBER IS SPECIFIED

ENGINEERS SEAL

REV	DESCRIPTION	DATE	DFT	CHK	APP
B	Issued for Approval	08-Feb-23	JE	VD	AA
A	Issued for Approval	23-Jan-23	JE	VD	AA

REVISIONS

9087A 198 Street Langley, BC Canada V1M 3B1
Phone : 604-936-4217
www.awcsolutions.com

THIS DRAWING IS THE PROPERTY OF AWC AND CONTAINS PROPRIETARY AND CONFIDENTIAL INFORMATION WHICH MUST NOT BE DUPLICATED, USED OR DISCLOSED OTHER THAN EXPRESSLY AUTHORIZED BY AWC.

CLIENT	CITY AND BUROUGH OF WRANGELL
PROJECT	WRANGELL WTP
TITLE	TIE-IN LIST AND SCHEDULE

SCALE	PROJECTION	DEFAULT UNITS	SHEET SIZE	SHEET
NTS		in	17 x 11	2 OF 2

DRAWING NO. 17805-PI-LST-001 REV B

PROJECT NAME: Wrangell WTP

PROJECT NO.: 17805

DOCUMENT NAME: Manual Valve List

DOCUMENT NO.: 17805-PI-LST-002

B	14-Feb-23	Issued for Review	JE	TG	AA
A	23-Jan-23	Issued for Review	JE	VD	AA
Rev	**Date**	**Revision Description**	**Originator**	**Checker**	**Approver**

Rev	No.	Tag No.	Size	Manufacturer	Description	Part #	Quantity	P&ID No.	Piping/Equipment Tag	Notes
RAPID MIXER & DISTRIBUTION TANK										
	1	01-HV-0101, 01-HV-0102, 01-HV-0103	2"	MA Stewart	2" Ball Valve • SS 316 Body & Trim • PTFE Gasket • Threaded Connection • PTFE Seat • NSF 61 Compliant • P-T rating: 1000 psi @ 100°F	G2E 15-25146	3	17805-PR-PID-001 Sheet 2	01-TK-020	Drain Valves
FLOCCULATOR & CLARIFIER TANKS										
	2	02-HV-1020, 02-HV-1021, 02-HV-1041, 02-HV-1103, 02-HV-1191, 02-HV-2020, 02-HV-2021, 02-HV-2041, 02-HV-2103, 02-HV-2191, 02-HV-3020, 02-HV-3021, 02-HV-3041, 02-HV-3103, 02-HV-3191	2"	MA Stewart	2" Ball Valve • SS 316 Body & Trim • PTFE Gasket • Threaded Connection • PTFE Seat • NSF 61 Compliant • P-T rating: 1000 psi @ 100°F	G2E 15-25146	15	17805-PR-PID-002 Sheet 1, 17805-PR-PID-002 Sheet 2, 17805-PR-PID-002 Sheet3	02-TK-102, 02-TK-102, 02-TK-104, 02-TK-110, 02-TK-119, 02-TK-202, 02-TK-202, 02-TK-204, 02-TK-210, 02-TK-219, 02-TK-302, 02-TK-302, 02-TK-304, 02-TK-310, 02-TK-319	Drain Valves
	3	02-HV-1101, 02-HV-2101, 02-HV-3101	2-1/2"	Dezurik	• BOS: Resilient Seated Butterfly Valve • 2.5: 2-1/2" Valve Size • US: Uninterrupted Seat • L1: ASME Class 125/150 Lugged Drilling • DI: Ductile Iron Body • NBR: Acrylonitrile-Butadiene Seat Material • NBR: Acrylonitrile-Butadiene Shaft Seal Material • DI: Ductile Iron Nickle Plated Disc • S8: 410 SS Shaft • MG07-HD8: Manual Gear Actuator, 8" Dia. Handwheel • NSF 61 Certified • AWWA 504 Class 75B • P-T Rating: 250 psi @ 180°F	BOS,2.5,US,L1,DI,NBR,NBR,DI-S8*MG07-HD8	3	17805-PR-PID-002 Sheet 1, 17805-PR-PID-002 Sheet 2, 17805-PR-PID-002 Sheet 3	02-TK-110, 02-TK-210, 02-TK-310	Recycle Supply Inlet
	4	02-HV-1102, 02-HV-2102, 02-HV-3102	3"	Dezurik	• BAW: AWWA Butterfly Valve • 3: 3" Valve Size • F1: ASME Class 125/150 Flanged Drilling • CI: Cast Iron Body c/w Blue Epoxy Coating • NBRN: Acrylonitrile-Butadiene, Self Adjusting Packing Material • NBR: Acrylonitrile-Butadiene Seat Material • 150B: Class AWWA-C-504 Flanged • DI: Ductile Iron with 316 SS Edge Disc • S2: 316 SS Shaft & Pin • GS-6B-HD8: Manual Gear Actuator, 8" dia. Handwheel • NSF 61 Certified • P-T Rating: 250 psi @ 180°F	BAW,3,F1,CI,NBRN,NBR,150B,DI-S2*GS-6B-HD8	3	17805-PR-PID-002 Sheet 1, 17805-PR-PID-002 Sheet 2, 17805-PR-PID-002 Sheet 3	02-TK-110, 02-TK-210, 02-TK-310	Recycle Supply Inlet

Rev	No.	Tag No.	Size	Manufacturer	Description	Part #	Quantity	P&ID No.	Piping/Equipment Tag	Notes
	5	02-HV-1190, 02-HV-2190, 02-HV-3190	4"	Dezurik	• BAW: AWWA Butterfly Valve • 4: 4" Valve Size • F1: ASME Class 125/150 Flanged Drilling • CI: Cast Iron Body c/w Blue Epoxy Coating • NBRN: Acrylonitrile-Butadiene, Self Adjusting Packing Material • NBR: Acrylonitrile-Butadiene Seat Material • 150B: Class AWWA-C-504 Flanged • DI: Ductile Iron with 316 SS Edge Disc • S2: 316 SS Shaft & Pin • GS-6B-HD8: Manual Gear Actuator, 8" dia. Handwheel • NSF 61 Certified • P-T Rating: 250 psi @ 180°F	BAW,4,F1,CI,NBRN,NBR,150B,DI-S2*GS-6B-HD8	3	17805-PR-PID-002 Sheet 1, 17805-PR-PID-002 Sheet 2, 17805-PR-PID-002 Sheet 3	02-TK-110, 02-TK-210, 02-TK-310	Recycle Supply to Recycle Pumps
	6	02-HV-1192, 02-HV-2192, 02-HV-3192	10"	Dezurik	• BAW: AWWA Butterfly Valve • 10: 10" Valve Size • F1: ASME Class 125/150 Flanged Drilling • CI: Cast Iron Body c/w Blue Epoxy Coating • NBRN: Acrylonitrile-Butadiene, Self Adjusting Packing Material • NBR: Acrylonitrile-Butadiene Seat Material • 150B: Class AWWA-C-504 Flanged • DI: Ductile Iron with 316 SS Edge Disc • S2: 316 SS Shaft & Pin • GS-6B-HD12: Manual Gear Actuator, 12" dia. Handwheel • NSF 61 Certified • P-T Rating: 250 psi @ 180°F	BAW,10,F1,CI,NBRN,NBR,150B,DI-S2*GS-6B-HD12	3	17805-PR-PID-002 Sheet 1, 17805-PR-PID-002 Sheet 2, 17805-PR-PID-002 Sheet 3	02-TK-110, 02-TK-210, 02-TK-310	DAF Train Effluent
	7	02-HV-1104, 02-HV-2104, 02-HV-3104	3/4"	MA Stewart	3/4" Ball Valve • SS 316 Body & Trim • PTFE Gasket • Threaded Connection • PTFE Seat • NSF 61 Compliant • P-T rating: 1000 psi @ 100°F	G2E 15-25062	3	17805-PR-PID-002 Sheet 1, 17805-PR-PID-002 Sheet 2, 17805-PR-PID-002 Sheet 3	02-TK-119, 02-TK-219, 02-TK-319	Spray Wash Isolation Valve
RECYCLE PUMPS & SATURATORS										
	8	02-HV-1202, 02-HV-1206, 02-HV-1203, 02-HV-1207, 02-HV-2202, 02-HV-2206, 02-HV-2203, 02-HV-2207, 02-HV-3202, 02-HV-3206, 02-HV-3203, 02-HV-3207	1/2"	MA Stewart	1/2" Ball Valve • SS 316 Body & Trim • PTFE Gasket • Threaded Connection • PTFE Seat • NSF 61 Compliant • P-T rating: 1000 psi @ 100°F	G2E 15-25047	12	17805-PR-PID-003 Sheet 1, 17805-PR-PID-003 Sheet 2, 17805-PR-PID-003 Sheet 3	02-P-120 02-P-220, 02-P-320	Pressure Instrumentation Isolation Valves

Rev	No.	Tag No.	Size	Manufacturer	Description	Part #	Quantity	P&ID No.	Piping/Equipment Tag	Notes
	9	02-HV-1205, 02-HV-2205, 02-HV-3205	1/2"	MA Stewart	1/2" Ball Valve • SS 316 Body & Trim • PTFE Gasket • Threaded Connection • PTFE Seat • NSF 61 Compliant • P-T rating: 1000 psi @ 100°F	G2E 15-25047	3	17805-PR-PID-003 Sheet 1, 17805-PR-PID-003 Sheet 2, 17805-PR-PID-003 Sheet 3	3"-TW-105-SS4, 3"-TW-205-SS4, 3"-TW-305-SS4	Drain Valves
	10	02-HV-1262, 02-HV-2262, 02-HV-3262	2"	MA Stewart	2" Ball Valve • SS 316 Body & Trim • PTFE Gasket • Threaded Connection • PTFE Seat • NSF 61 Compliant • P-T rating: 1000 psi @ 100°F	G2E 15-25146	3	17805-PR-PID-003 Sheet 1, 17805-PR-PID-003 Sheet 2, 17805-PR-PID-003 Sheet 3	4"-TW-111-SS4, 4"-TW-211-SS4, 4"-TW-311-SS4	Drain Valves
	11	02-HV-1252, 02-HV-1253, 02-HV-1256, 02-HV-1258, 02-HV-2252, 02-HV-2253, 02-HV-2256, 02-HV-2258, 02-HV-3252, 02-HV-3253, 02-HV-3256, 02-HV-3258	1"	MA Stewart	1" Ball Valve • SS 316 Body & Trim • PTFE Gasket • Threaded Connection • PTFE Seat • NSF 61 Compliant • P-T rating: 1000 psi @ 100°F	G2E 15-25088	12	17805-PR-PID-003 Sheet 1, 17805-PR-PID-003 Sheet 2, 17805-PR-PID-003 Sheet 3	02-SAT-125, 02-SAT-225, 02-SAT-325	Saturator Level Instrument Isolation Valves
	12	02-HV-1254, 02-HV-1255, 02-HV-1257, 02-HV-1259, 02-HV-1261, 02-HV-2254, 02-HV-2255, 02-HV-2257, 02-HV-2259, 02-HV-2261 02-HV-3254, 02-HV-3255, 02-HV-3257, 02-HV-3259, 02-HV-3261	1/2"	MA Stewart	1/2" Ball Valve • SS 316 Body & Trim • PTFE Gasket • Threaded Connection • PTFE Seat • NSF 61 Compliant • P-T rating: 1000 psi @ 100°F	G2E 15-25047	15	17805-PR-PID-003 Sheet 1, 17805-PR-PID-003 Sheet 2, 17805-PR-PID-003 Sheet 3	02-SAT-125, 02-SAT-225, 02-SAT-325	Drain Valves and Instrument Isolation valves.
B	13									Deleted per 17805-PC-PCN-010.

Rev	No.	Tag No.	Size	Manufacturer	Description	Part #	Quantity	P&ID No.	Piping/Equipment Tag	Notes
B	14	02-HV-1251, 02-HV-2251, 02-HV-3251	3"	Dezurik	• BAW: AWWA Butterfly Valve • 3: 3" Valve Size • F1: ASME Class 125/150 Flanged Drilling • CI: Cast Iron Body c/w Blue Epoxy Coating • NBRN: Acrylonitrile-Butadiene, Self Adjusting Packing Material • NBR: Acrylonitrile-Butadiene Seat Material • 150B: Class AWWA-C-504 Flanged • DI: Ductile Iron with 316 SS Edge Disc • S2: 316 SS Shaft & Pin • GS-6B-HD8: Manual Gear Actuator, 8" dia. Handwheel • NSF 61 Certified • P-T Rating: 250 psi @ 180°F	BAW,3,F1,CI,NBRN,NBR,150B,DI-S2*GS-6B-HD8	3	17805-PR-PID-003 Sheet 1, 17805-PR-PID-003 Sheet 2, 17805-PR-PID-003 Sheet 3	3"-TW-105-SS4, 3"-TW-205-SS4, 3"-TW-305-SS4	-Isolation Valves - Valves 02-HV-1204/2204/3204 deteled as per 17805-PC-PCN-010
AIR COMPRESSOR										
	15	08-HV-8153	1/2"	Ingersoll Rand	1/2" Ball Valve, see note	See Note	1	17805-PR-PID-004	08-REC-815	Supplied by Air Compressor Vendor
	16	08-HV-8154	1/4"	Ingersoll Rand	1/4" Ball Valve, see note	See Note	1	17805-PR-PID-004	08-REC-815	Supplied by Air Compressor Vendor
	17	08-HV-8151	1"	Ingersoll Rand	1" Ball Valve, see note	See Note	1	17805-PR-PID-004	08-REC-815	Supplied by Air Compressor Vendor
	18	08-HV-3152	1/2"	MA Stewart	1/2" Ball Valve • SS 316 Body & Trim • PTFE Gasket • Threaded Connection • PTFE Seat • NSF 61 Compliant • P-T rating: 1000 psi @ 100°F	G2E 15-25047	1	17805-PR-PID-004	08-PI-820	Compressed Air Supply Pressure Gauge Isolation Valve
FILTER TANKS										
	19	03-HV-1401, 03-HV-1601, 03-HV-1801, 03-HV-2401, 03-HV-2601, 03-HV-2801	2"	MA Stewart	2" Ball Valve • SS 316 Body & Trim • PTFE Gasket • Threaded Connection • PTFE Seat • NSF 61 Compliant • P-T rating: 1000 psi @ 100°F	G2E 15-25146	6	17805-PR-PID-006 Sheet 1 17805-PR-PID-007 Sheet 1	03-TK-140, 03-TK-160, 03-TK-180, 03-TK-240, 03-TK-260, 03-TK-280	Drain Valves
	20	03-HV-1403, 03-HV-1404, 03-HV-1405, 03-HV-1603, 03-HV-1604, 03-HV-1605, 03-HV-1803, 03-HV-1804, 03-HV-1805, 03-HV-2403, 03-HV-2404, 03-HV-2405, 03-HV-2603, 03-HV-2604, 03-HV-2605, 03-HV-2803, 03-HV-2804, 03-HV-2805	1/2"	MA Stewart	1/2" Ball Valve • SS 316 Body & Trim • PTFE Gasket • Threaded Connection • PTFE Seat • NSF 61 Compliant • P-T rating: 1000 psi @ 100°F	G2E 15-25047	18	17805-PR-PID-006 Sheet 1, 17805-PR-PID-007 Sheet 2	03-TK-140, 03-TK-140, 03-TK-160, 03-TK-160, 03-TK-180, 03-TK-180, 03-TK-240, 03-TK-240, 03-TK-260, 03-TK-260, 03-TK-280, 03-TK-280	Compressed Air Supply Pressure Gauge Isolation Valve

Rev	No.	Tag No.	Size	Manufacturer	Description	Part #	Quantity	P&ID No.	Piping/Equipment Tag	Notes
	21	02-HV-1402, 02-HV-1602, 02-HV-1802, 02-HV-2402, 02-HV-2602, 02-HV-2802,	12"	Dezurik	• BAW: AWWA Butterfly Valve • 12: 12" Valve Size • F1: ASME Class 125/150 Flanged Drilling • CI: Cast Iron Body c/w Blue Epoxy Coating • NBRN: Acrylonitrile-Butadiene, Self Adjusting Packing Material • NBR: Acrylonitrile-Butadiene Seat Material • 150B: Class AWWA-C-504 Flanged • DI: Ductile Iron with 316 SS Edge Disc • S2: 316 SS Shaft & Pin • GS-6B-HD12: Manual Gear Actuator, 12" dia. Handwheel • NSF 61 Certified • P-T Rating: 250 psi @ 180°F	BAW,12,F1,CI,NBRN,NBR,150B,DI-S2*GS-6B-HD12	6	17805-PR-PID-006 Sheet 1 17805-PR-PID-007 Sheet 1	03-TK-140, 03-TK-160, 03-TK-180, 03-TK-240, 03-TK-260, 03-TK-280	DAF Train Effluent
	22	03-HV-1406, 03-HV-1606, 03-HV-1806, 03-HV-2406, 03-HV-2606, 03-HV-2806	1/4"	HACH	1/4" Needle Valve, see note	See Note	6	17805-PR-PID-006 Sheet 1 17805-PR-PID-007 Sheet 1	03-TK-140, 03-TK-160, 03-TK-180, 03-TK-240, 03-TK-260, 03-TK-280	Needle valve supplied with Turbidimeter

PROJECT NAME: Wrangell WTP

PROJECT NO.: 17085

DOCUMENT NAME: SPECIALTY ITEMS LIST

DOCUMENT NO.: 17085-PI-LST-003

A	31-Jan-23	Issued for Review	JE	VD	AA
Rev	**Date**	**Revision Description**	**Originator**	**Checker**	**Approver**

SPECIALTY ITEMS LIST

Rev	No.	Tag No.	Size	Manufacturer	Description	Part #	Quantity	P&ID No.	Piping/Equipment Tag	Notes
RAPID MIXER & DISTRIBUTION TANK										
	1	01-SP-0201, 01-SP-0202, 01-SP-0203	3/4"	AWC	PVC Injection Quill • 3/4" PVC Spring Check Valve • 3/4" PVC Ball Valve • 3/4" Nipple • 1/2" PVC Solution Tube • NSF 61 Compliant	-	3	17805-PR-PID-001 SHEET 2	Raw Water Inlet Line	* SP-0203 is an installed spare * Solution tube to be cut to length at site on a 45 degree angle * Centre alignment
	2	01-SP-0211, 01-SP-0231	10"	Canada Metal Pacific	Magnesium Anode. • 10" Magnesium Anode 1" Diameter • NSF 61 Certified	WTMAGAN10	2	17805-PR-PID-001 SHEET 2	01-TK-020, 01-TK-023	
FLOCCULATOR & CLARIFIER TANKS										
	3	02-SP-1021, 02-SP-1041, 02-SP-1102, 02-SP-1192, 02-SP-2021, 02-SP-2041, 02-SP-2102, 02-SP-2192, 02-SP-3021, 02-SP-3041, 02-SP-3102, 02-SP-3192	10"	Canada Metal Pacific	Magnesium Anode. • 10" Magnesium Anode 1" Diameter • NSF 61 Certified	WTMAGAN10	12	17805-PR-PID-002 SHEET 1, 17805-PR-PID-002 SHEET 2, 17805-PR-PID-002 SHEET 3	02-TK-102, 02-TK-104, 02-TK-110, 02-TK-119, 02-TK-202, 02-TK-204, 02-TK-210, 02-TK-219, 02-TK-302, 02-TK-304, 02-TK-310, 02-TK-319	
	4	02-SP-1101, 02-SP-2101, 02-SP-3101	2-1/2"	AWC	2-1/2" NPS Recycle Manifold • 10' long • 15x 0.0927" dia. orifices, spaced 8" apart • SS 304 Sch 10S • NSF 61 Compliant	-	3	17805-PR-PID-002 SHEET 1, 17805-PR-PID-002 SHEET 2, 17805-PR-PID-002 SHEET 3	02-TK-110, 02-TK-210, 02-TK-310	
	5	02-SP-1103, 02-SP-2103, 02-SP-3103	3"	AWC	3" NPS Recycle Manifold • 10' long • 15x 0.152" dia. orifices, spaced 8" apart • SS 304 Sch 10S • NSF 61 Compliant	-	3	17805-PR-PID-002 SHEET 1, 17805-PR-PID-002 SHEET 2, 17805-PR-PID-002 SHEET 3	02-TK-110, 02-TK-210, 02-TK-310	
	6	02-SP-1191, 02-SP-2191, 02-SP-3191	1"	McMaster Carr	Clip on nozzles • Adjustable cone patterned nozzles • 100 psi @ 175F, EPDM gasket • PVC Sch. 80 pipe • 80° spray angle • Quantity per tank: 5	6312K11	15	17805-PR-PID-002 SHEET 1, 17805-PR-PID-002 SHEET 2, 17805-PR-PID-002 SHEET 3	02-TK-110, 02-TK-210, 02-TK-310	
RECYCLE SKIDS										
	7	02-TSS-1200, 02-TSS-2200, 02-TSS-3200	4"	McMaster Carr	Temporary Cone Strainer • 4" Pipe Size • 1/8" Screen Opening • 304 SS • NSF Compliant	4388K18	3	17805-PR-PID-003 SHEET 1, 17805-PR-PID-003 SHEET 2, 17805-PR-PID-003 SHEET 3	4"-TW-101-SS4, 4"-TW-201-SS4, 4"-TW-301-SS4	
	8	02-CV-1204, 02-CV-2204, 02-CV-3204	3"	Dezurik	APCO Silent Check Valve • 3: 3" Pipe Size • 300A: Wafer Body Style • W1W2: AMSE 125/150/250/300 End Connection • DI: Ductile Iron Body • S2: 316 SS Plug and Seat • NBR: Acrylonitrile-Butadiene Seating Surface • P-T Rating: 400 psig @ -57 to 121°c • NSF 61 Certified	☒SC,3,300A,W1W2,DI,S2-NBR	3	17805-PR-PID-003 SHEET 1, 17805-PR-PID-003 SHEET 2, 17805-PR-PID-003 SHEET 3	3"-TW-101-SS4, 3"-TW-201-SS4, 3"-TW-301-SS4	
	9	02-SP-1251, 02-SP-2251, 02-SP-3251	1"	Jaeger	Tri-Packs Plastics Packing • 1" OD • Polypropylene (PP) • NSF 61 Certified	901010	37.71 ft^3	17805-PR-PID-003 SHEET 1, 17805-PR-PID-003 SHEET 2, 17805-PR-PID-003 SHEET 3	02-SAT-125, 02-SAT-225, 02-SAT-325	

SPECIALTY ITEMS LIST

Rev	No.	Tag No.	Size	Manufacturer	Description	Part #	Quantity	P&ID No.	Piping/Equipment Tag	Notes
	10	02-CV-1260, 02-CV-2260, 02-CV-3260	1/2"	MA Stewart	1/2" In-Line Spring Loaded Check Valve • Brass Body and Seat • NBR 70SH Disc • Threaded Ends • P-T Rating: 200 psig @ 200F	MAS 700	3	17805-PR-PID-003 SHEET 1, 17805-PR-PID-003 SHEET 2, 17805-PR-PID-003 SHEET 3	1/2"-PA-801-SS4, 1/2"-PA-802-SS4, 1/2"-PA-803-SS4	
	11	02-SP-1263, 02-SP-2263, 02-SP-3263	3"	Linebacker	3" Class 150# Isolation Kit • 1/8" THK • G-10 Epoxy Glass Retainer Material • EPDM Sealing Element • NSF-61 Certified • 8x G-10 Epoxy Glass Bolt Isolation Sleeves (1/32" THK) • 16x G-10 Epoxy Glass Isolating Washers (1/8" THK) • 16x - Zinc Plated Washers (1/8" THK)	61(LB61)	3	17805-PR-PID-003 SHEET 1, 17805-PR-PID-003 SHEET 2, 17805-PR-PID-003 SHEET 3	3"-TW-105-SS4, 3"-TW-205-SS4, 3"-TW-305-SS4	
	12	02-SP-1264, 02-SP-2264, 02-SP-3264	4"	Linebacker	4" Class 150# Isolation Kit • 1/8" THK • G-10 Epoxy Glass Retainer Material • EPDM Sealing Element • NSF-61 Certified • 8x G-10 Epoxy Glass Bolt Isolation Sleeves (1/32" THK) • 16x G-10 Epoxy Glass Isolating Washers (1/8" THK) • 16x Zinc Plated Washers (1/8" THK)	61(LB61)	3	17805-PR-PID-003 SHEET 1, 17805-PR-PID-003 SHEET 2, 17805-PR-PID-003 SHEET 3	4"-TW-111-SS4, 4"-TW-211-SS4, 4"-TW-311-SS4	
AIR COMPRESSOR										
	13	08-CV-8101, 08-CV-8201	TBD	Ingersoll Rand	Check Valve	See note	2	17805-PR-PID-004	08-AC-810, 08-AC-820	Supplied by Air Compressor Vendor
FILTER TANKS										
	14	03-SP-1401, 03-SP-1601, 03-SP-1801, 03-SP-2401, 03-SP-2601, 03-SP-2801	10"	Canada Metal Pacific	Magnesium Anode. • 10" Magnesium Anode 1" Diameter • NSF 61 Certified	WTMAGAN10	6	17805-PR-PID-006 SHEET 1, 17805-PR-PID-007 SHEET 1	03-TK-140, 03-TK-160, 03-TK-180, 03-TK-240, 03-TK-260, 03-TK-280	
	15	03-SP-1402, 03-SP-1602, 03-SP-1802, 03-SP-2402, 03-SP-2602, 03-SP-2802	1-1/4"	Orthos Liquid Systems	Type D Filter Nozzles D-36X0.2-M24-45-200-s • 36 0.2 mm slots (total area 1.37 cm^2) • M24 Thread • 45mm Thread Length • 200mm Shaft Length • No Slots in Shaft • 16mm Shaft Bore • Polypropylene Material • NSF-61 Certified DB50.28/12-17 Expansion Ring • M24 Thread • Polypropylene Material • NSF-61 Certified	Nozzle: N16300 Expansion Ring: N22019	3,168	17805-PR-PID-006 SHEET 1, 17805-PR-PID-007 SHEET 1	03-TK-140, 03-TK-160, 03-TK-180, 03-TK-240, 03-TK-260, 03-TK-280	Includes 10% extra for spares.
	16	03-SP-1403, 03-SP-1603, 03-SP-1803, 03-SP-2403, 03-SP-2603, 03-SP-2803	0.95 - 1.05 mm	Manufacturers Mineral Co.	Anthracite • 18" Depth • 0.95 - 1.05 mm effective size • UC <1.45 • AWWA B100 Standard • NSF-61 Certified	Anthracite	1,200 ft^3	17805-PR-PID-006 SHEET 1, 17805-PR-PID-007 SHEET 1	03-TK-140, 03-TK-160, 03-TK-180, 03-TK-240, 03-TK-260, 03-TK-280	Includes 10% extra

SPECIALTY ITEMS LIST

Rev	No.	Tag No.	Size	Manufacturer	Description	Part #	Quantity	P&ID No.	Piping/Equipment Tag	Notes
	17	03-SP-1404, 03-SP-1604, 03-SP-1804, 03-SP-2404, 03-SP-2604, 03-SP-2804	0.45 - 0.55 mm	Manufacturers Mineral Co.	Filter Sand • 24" Depth • 0.45 - 0.55 mm effective size • UC <1.45 • AWWA B100 Standard • NSF-61 Certified	Filter Sand	1,600 ft^3	17805-PR-PID-006 SHEET 1, 17805-PR-PID-007 SHEET 1	03-TK-140, 03-TK-160, 03-TK-180, 03-TK-240, 03-TK-260, 03-TK-280	Includes 10% extra

	Rev	Service	P&ID	Import/ Export	Tie-in No.	Responsible Party (AWC/Contractor)	Pipework					Temperature - °F			Pressure - PSIG			Phase V or L	Flow - USGPM					Specific Gravity	Notes	
							Size	Number	Specification	Schedule	A/Ground	Operating	Design	TEL	Operating	MAWP	Pump S/off		Min	Normal	Max	Start-up	Design		
A	A	Rapid Mixer Tank Inlet	17805-PR-PID-001 pg 2 of 2	Import	01-TP-020	Contractor	14"				Yes	37-63	113	-	5-10	10	-	L	350	1600	1600	500	1600	1	
				Export		AWC		-	-	-															
	A	Distributor Tank Outlet to DAF Train 1	17805-PR-PID-001 pg 2 of 2	Import	01-TP-023	AWC	10"	-	-	-	Yes	37-63	113	-	2	10	-	L	500	800	800	500	800	1	
				Export		Contractor																			
	A	Distributor Tank Outlet to DAF Train 2	17805-PR-PID-001 pg 2 of 2	Import	01-TP-024	AWC	10"	-	-	-	Yes	37-63	113	-	2	10	-	L	500	800	800	500	800	1	
				Export		Contractor																			
	A	Distributor Tank Outlet to DAF Train 3	17805-PR-PID-001 pg 2 of 2	Import	01-TP-025	AWC	10"	-	-	-	Yes	37-63	113	-	2	10	-	L	500	800	800	500	800	1	
				Export		Contractor																			
B	A	Rapid Mixer Tank Overflow 1	17805-PR-PID-001 pg 2 of 2	Import	01-TP-026	AWC	10"	-	-	-	Yes	37-63	113	-	0.5-1	10	-	L	0	0	800	0	800	1	
				Export		Contractor																			
	A	DAF Train 1 Inlet	17805-PR-PID-002 pg 1 of 3	Import	02-TP-100	Contractor	10"				Yes	37-63	113	-	5	14.5	-	L	500	800	800	500	800	1	
				Export		AWC		02-XV-104	-	-															
	A	DAF Train 1 Recycle Manifold 1	17805-PR-PID-002 pg 1 of 3	Import	02-TP-110	Contractor	2 1/2"				Yes	37-63	113	-	65-85	150	-	L	0	22	22	22	80	1	
				Export		AWC		02-HV-1101	-	-															
	A	DAF Train 1 Recycle Manifold 2	17805-PR-PID-002 pg 1 of 3	Import	02-TP-111	Contractor	3"				Yes	37-63	113	-	65-85	150	-	L	58	58	58	58	80	1	
				Export		AWC		02-HV-1102	-	-															
	A	DAF Train 1 Trough Spray Wash	17805-PR-PID-002 pg 1 of 3	Import	02-TP-114	Contractor	3/4"				Yes	37-63	113	-	30-40	150	-	L	0	5	7	0	10	1	
				Export		AWC		02-HV-1104	-	-															
C	A	DAF Train 1 Float Waste	17805-PR-PID-002 pg 1 of 3	Import	02-TP-115	AWC	4"	-	-	-	Yes	37-63	113	-	5	14.5	-	L	0	16	16	0	30	1	
				Export		Contractor																			
	A	DAF Train 1 Effluent	17805-PR-PID-002 pg 1 of 3	Import	02-TP-116	AWC	10"	02-HV-1192	-	-	Yes	37-63	113	-	5	14.5	-	L	500	800	800	500	800	1	
				Export		Contractor																			
	A	DAF Train 1 Overflow	17805-PR-PID-002 pg 2 of 3	Import	02-TP-117	AWC	10"	-	-	-	Yes	37-63	113	-	0.5-1	14.5	-	L	0	0	800	0	800	1	
				Export		Contractor																			
	A	DAF Train 1 Recycle Outlet	17805-PR-PID-002 pg 1 of 3	Import	02-TP-119	AWC	4"	02-HV-1190	-	-	Yes	37-63	113	-	5	45	-	L	58	80	80	80	80	1	
				Export		Contractor																			
	A	DAF Train 2 Inlet	17805-PR-PID-002 pg 2 of 3	Import	02-TP-200	Contractor	10"				Yes	37-63	113	-	5	14.5	-	L	500	800	800	500	800	1	
				Export		AWC		02-XV-204	-	-															
D	A	DAF Train 2 Recycle Manifold 1	17805-PR-PID-002 pg 2 of 3	Import	02-TP-210	Contractor	2 1/2"				Yes	37-63	113	-	65-85	150	-	L	0	22	22	22	80	1	
				Export		AWC		02-HV-2101	-	-															
	A	DAF Train 2 Recycle Manifold 2	17805-PR-PID-002 pg 2 of 3	Import	02-TP-211	Contractor	3"				Yes	37-63	113	-	65-85	150	-	L	58	58	58	58	80	1	
				Export		AWC		02-HV-2102	-	-															
	A	DAF Train 2 Trough Spray Wash	17805-PR-PID-002 pg 2 of 3	Import	02-TP-214	Contractor	3/4"				Yes	37-63	113	-	30-40	150	-	L	0	5	7	0	10	1	
				Export		AWC		02-HV-2104	-	-															
	A	DAF Train 2 Float Waste	17805-PR-PID-002 pg 2 of 3	Import	02-TP-215	AWC	4"	-	-	-	Yes	37-63	113	-	5	14.5	-	L	0	16	16	0	30	1	
				Export		Contractor																			
	A	DAF Train 2 Effluent	17805-PR-PID-002 pg 2 of 3	Import	02-TP-216	AWC	10"	02-HV-2192	-	-	Yes	37-63	113	-	5	14.5	-	L	500	800	800	500	800	1	
				Export		Contractor																			
E	A	DAF Train 2 Overflow	17805-PR-PID-002 pg 2 of 3	Import	02-TP-217	AWC	10"	-	-	-	Yes	37-63	113	-	0.5-1	14.5	-	L	0	0	800	0	800	1	
				Export		Contractor																			
	A	DAF Train 2 Recycle Outlet	17805-PR-PID-002 pg 2 of 3	Import	02-TP-219	AWC	4"	02-HV-2190	-	-	Yes	37-63	113	-	5	45	-	L	58	80	80	80	80	1	
				Export		Contractor																			
	A	DAF Train 3 Inlet	17805-PR-PID-002 pg 3 of 3	Import	02-TP-300	Contractor	10"				Yes	37-63	113	-	5	14.5	-	L	500	800	800	500	800	1	
				Export		AWC		02-XV-304	-	-															
	A	DAF Train 3 Recycle Manifold 1	17805-PR-PID-002 pg 3 of 3	Import	02-TP-310	Contractor	2 1/2"				Yes	37-63	113	-	65-85	150	-	L	0	22	22	22	80	1	
				Export		AWC		02-HV-3101	-	-															
	A	DAF Train 3 Recycle Manifold 2	17805-PR-PID-002 pg 3 of 3	Import	02-TP-311	Contractor	3"				Yes	37-63	113	-	65-85	150	-	L	58	58	58	58	80	1	
				Export		AWC		02-HV-3102	-	-															

NOTES:

ENGINEERS SEAL

REV	DESCRIPTION	DATE	DFT	CHK	APP
A	Issued for Review	09-Feb-23	SB	AS	PC

REVISIONS

9087A 198 Street Langley, BC Canada V1M 3B1
Phone : 604-936-4217
www.awcsolutions.com

THIS DRAWING IS THE PROPERTY OF AWC AND CONTAINS PROPRIETARY AND CONFIDENTIAL INFORMATION WHICH MUST NOT BE DUPLICATED, USED OR DISCLOSED OTHER THAN EXPRESSLY AUTHORIZED BY AWC.

CLIENT: City & Borough of Wrangell
PROJECT: Wrangell WTP
TITLE: Battery Limit Table

SCALE	PROJECTION	DEFAULT UNITS	SHEET SIZE	SHEET
NTS		INCH	17 x 11	1 OF 4

DRAWING NO.: 17805-PR-BLT-001
REV: A

\\srv-fs01\Shared\Shared\Customers\CRW Engineering\17805 Wrangell AK\5 Engineering\5.10 Process\5.10.L Tables, Summaries & Lists\5.10.L.1 BLT

	Rev	Service	P&ID	Import/ Export	Tie-in No.	Responsible Party (AWC/Contractor)	Pipework Size	Pipework Number	Pipework Specification	Pipework Schedule	Pipework A/Ground	Temperature - °F Operating	Temperature - °F Design	Temperature - °F TEL	Pressure - PSIG Operating	Pressure - PSIG MAWP	Pressure - PSIG Pump S/off	Phase V or L	Flow - USGPM Min	Flow - USGPM Normal	Flow - USGPM Max	Flow - USGPM Start-up	Flow - USGPM Design	Specific Gravity	Notes
A	A	DAF Train 3 Trough Spray Wash	17805-PR-PID-002 pg 3 of 3	Import	02-TP -314	Contractor	3/4"				Yes	37-63	113	-	30-40	150	-	L	0	5	7	0	10	1	
				Export		AWC		02-HV-3104	-	-															
	A	DAF Train 3 Float Waste	17805-PR-PID-002 pg 3 of 3	Import	02-TP -315	AWC	4"	-	-	-	Yes	37-63	113	-	5	14.5	-	L	0	16	16	0	30	1	
				Export		Contractor																			
	A	DAF Train 3 Effluent	17805-PR-PID-002 pg 3 of 3	Import	02-TP -316	AWC	10"	02-HV-3192	-	-	Yes	37-63	113	-	5	14.5	-	L	500	800	800	500	800	1	
				Export		Contractor																			
	A	DAF Train 3 Overflow	17805-PR-PID-002 pg 3 of 3	Import	02-TP -317	AWC	10"	-	-	-	Yes	37-63	113	-	0.5-1	14.5	-	L	0	0	800	0	800	1	
				Export		Contractor																			
B	A	DAF Train 3 Recycle Outlet	17805-PR-PID-002 pg 3 of 3	Import	02-TP -319	AWC	4"	02-HV-3190	-	-	Yes	37-63	113	-	5	45	-	L	58	80	80	80	80	1	
				Export		Contractor																			
	A	Train 1 Recycle System Inlet	17805-PR-PID-003 pg 1 of 3	Import	02-TP -120	Contractor	4"				Yes	37-63	113	-	5	45	-	L	58	80	80	80	80	1	
				Export		AWC		4"-TW-101-SS4	SS304L	Sch10															
	A	Train 1 Saturator Pressure Relief	17805-PR-PID-002 pg 1 of 3	Import	02-TP -125	AWC	3/4"	02-PSV-127	-	-	Yes	37-63	113	-	150	150	-	G	0	0	8.95	0	16.8	1	Note 1, Flow in SCFM
				Export		Contractor																			
	A	Train 1 Saturator Air Supply Inlet	17805-PR-PID-002 pg 1 of 3	Import	02-TP -126	Contractor	1/2"				Yes	104-122	176	-	65-120	150	-	G	0	8.95	8.95	8.95	16.8	1	
				Export		AWC		1/2"-PA-801-SS4	SS304L	Sch40															Note 1, Flow in SCFM
	A	Train 1 Saturator Outlet	17805-PR-PID-002 pg 1 of 3	Import	02-TP -127	AWC	4"	4"-TW-111-SS4	SS304L	Sch10	Yes	37-63	113	-	65-85	150	-	L	58	80	80	58	80	1	
				Export		Contractor																			
C	A	Train 2 Recycle System Inlet	17805-PR-PID-003 pg 2 of 3	Import	02-TP -220	Contractor	4"				Yes	37-63	113	-	5	45	-	L	58	80	80	80	80	1	
				Export		AWC		4"-TW-201-SS4	SS304L	Sch10															
	A	Train 2 Saturator Pressure Relief	17805-PR-PID-003 pg 2 of 3	Import	02-TP -225	AWC	3/4"	02-PSV-227	-	-	Yes	37-63	113	-	150	150	-	G	0	0	8.95	0	16.8	1	Note 1, Flow in SCFM
				Export		Contractor																			
	A	Train 2 Saturator Air Supply Inlet	17805-PR-PID-003 pg 2 of 3	Import	02-TP -226	Contractor	1/2"				Yes	104-122	176	-	65-120	150	-	G	0	8.95	8.95	8.95	16.8	1	
				Export		AWC		1/2"-PA-802-SS4	SS304L	Sch40															Note 1, Flow in SCFM
	A	Train 2 Saturator Outlet	17805-PR-PID-003 pg 2 of 3	Import	02-TP -227	AWC	4"	4"-TW-211-SS4	SS304L	Sch10	Yes	37-63	113	-	65-85	150	-	L	58	80	80	58	80	1	
				Export		Contractor																			
	A	Train 3 Recycle System Inlet	17805-PR-PID-003 pg 3 of 3	Import	02-TP -320	Contractor	4"				Yes	37-63	113	-	5	45	-	L	58	80	80	80	80	1	
				Export		AWC		4"-TW-301-SS4	SS304L	Sch10															
	A	Train 3 Saturator Pressure Relief	17805-PR-PID-003 pg 3 of 3	Import	02-TP -325	AWC	3/4"	02-PSV-327	-	-	Yes	37-63	113	-	150	150	-	G	0	0	8.95	0	16.8	1	Note 1 , Flow in SCFM
				Export		Contractor																			
	A	Train 3 Saturator Air Supply Inlet	17805-PR-PID-003 pg 3 of 3	Import	02-TP -326	Contractor	1/2"				Yes	104-122	176	-	65-120	150	-	G	0	8.95	8.95	8.95	16.8	1	
				Export		AWC		1/2"-PA-803-SS4	SS304L	Sch40															Note 1 , Flow in SCFM
D	A	Train 3 Saturator Outlet	17805-PR-PID-003 pg 3 of 3	Import	02-TP -327	AWC	4"	4"-TW-311-SS4	SS304L	Sch10	Yes	37-63	113	-	65-85	150	-	L	58	80	80	58	80	1	
				Export		Contractor																			
	A	Compressore Package Outlet	17805-PR-PID-004 pg 1 of 1	Import	08-TP -815	AWC	1"	02-XV-304	-	-	Yes	104-122	176	-	65-120	150	-	L	500	800	800	500	800	1	Note1, Flow in SCFM
				Export		Contractor																			
	A	Filter Train A Chamber 1 Inlet	17805-PR-PID-006 pg 1 of 2	Import	03-TP -140	Contractor	6"				Yes	37-63	113	-	0.5-1	14.5	-	L	250	314	314	314	314	1	
				Export		AWC		-	-	-															
E	A	Filter Train A Chamber 1 Air Scour Inlet	17805-PR-PID-006 pg 1 of 2	Import	03-TP -141	Contractor	6"				Yes	122	176	-	4.5	14.5	-	V	0	360	360	0	360	1	
				Export		AWC		03-XV-142	-	-															Note1, Flow in SCFM
	A	Filter Train A Chamber 1 Turbidity Effluent	17805-PR-PID-006 pg 1 of 2	Import	03-TP -145	AWC	1/4"	03-HV-1406	-	-	Yes	37-63	113	-	0.5-4.3	87	-	L	1.6	5.5	7.8	5.5	15.6	1	Flow in GPH
				Export		Contractor																			
	A	Filter Train A Chamber 1 Effluent	17805-PR-PID-006 pg 2 of 2	Import	03-TP -142	AWC	6"	6"-TW-143-SS4	SS304L	Sch10	Yes	37-63	113	-	0.3	14.5	-	L	250	314	314	0	314	1	
				Export		Contractor																			
	A	Filter Train A Chamber 1 Rinse to Waste	17805-PR-PID-006 pg 2 of 2	Import	03-TP -143	AWC	6"	6"-WW-142-SS4	SS304L	Sch10	Yes	37-63	113	-	0.3	14.5	-	L	250	314	314	314	314	1	
				Export		Contractor																			
	A	Filter Train A Chamber 1 Backwash Water Supply	17805-PR-PID-006 pg 2 of 2	Import	03-TP -144	Contractor	12"				Yes	37-63	113	-	4.3-7.5	10 Note 2	-	L	0	960	1920	0	1920	1	
				Export		AWC		12"-TW-141-SS4	SS304L	Sch10															

NOTES:
1. Flow in SCFM. Temperature based on expected air temperature, to be confirmed by the supplier. SG given in comparison to air at STP.
2. Backwash water supply MAWP is 10 psig due to the plenum. Pipe MAWP is 14.5 psig. Plenum over protection device is required.

ENGINEERS SEAL

REV	DESCRIPTION	DATE	DFT	CHK	APP
A	Issued for Review	09-Feb-23	SB	AS	PC

REVISIONS

9087A 198 Street Langley, BC Canada V1M 3B1
Phone : 604-936-4217
www.awcsolutions.com

THIS DRAWING IS THE PROPERTY OF AWC AND CONTAINS PROPRIETARY AND CONFIDENTIAL INFORMATION WHICH MUST NOT BE DUPLICATED, USED OR DISCLOSED OTHER THAN EXPRESSLY AUTHORIZED BY AWC.

CLIENT	City & Borough of Wrangell
PROJECT	Wrangell WTP
TITLE	Battery Limit Table
SCALE	NTS
PROJECTION	
DEFAULT UNITS	INCH
SHEET SIZE	17 x 11
SHEET	2 OF 4
DRAWING NO.	17805-PR-BLT-001
REV	A

	Rev	Service	P&ID	Import/ Export	Tie-in No.	Responsible Party (AWC/Contractor)	Pipework					Temperature - °F			Pressure - PSIG			Phase V or L	Flow - USGPM					Specific Gravity	Notes
							Size	Number	Specification	Schedule	A/Ground	Operating	Design	TEL	Operating	MAWP	Pump S/off		Min	Normal	Max	Start-up	Design		
A	A	Filter Train A Chamber 2 Inlet	17805-PR-PID-006 pg 1 of 2	Import	03-TP -160	Contractor	6"				Yes	37-63	113	-	0.5-1	14.5	-	L	250	314	314	314	314	1	
				Export		AWC		-	-	-															
	A	Filter Train A Chamber 2 Air Scour Inlet	17805-PR-PID-006 pg 1 of 2	Import	03-TP -161	Contractor	6"				Yes	122	176	-	4.5	14.5	-	V	0	360	360	0	360	1	
				Export		AWC		03-XV-162	-	-															Note1, Flow in SCFM
	A	Filter Train A Chamber 2 Turbidity Effluent	17805-PR-PID-006 pg 1 of 2	Import	03-TP -165	AWC	1/4"	03-HV-1606	-	-	Yes	37-63	113	-	0.5-4.3	87	-	L	1.6	5.5	7.8	5.5	15.6	1	Flow in GPH
				Export		Contractor																			
	A	Filter Train A Chamber 2 Effluent	17805-PR-PID-006 pg 2 of 2	Import	03-TP -162	AWC	6"	6"-TW-163-SS4	SS304L	Sch10	Yes	37-63	113	-	0.3	14.5	-	L	250	314	314	0	314	1	
				Export		Contractor																			
B	A	Filter Train A Chamber 2 Rinse to Waste	17805-PR-PID-006 pg 2 of 2	Import	03-TP -163	AWC	6"	6"-WW-162-SS4	SS304L	Sch10	Yes	37-63	113	-	0.3	14.5	-	L	250	314	314	314	314	1	
				Export		Contractor																			
	A	Filter Train A Chamber 2 Backwash Water Supply	17805-PR-PID-006 pg 2 of 2	Import	03-TP -164	Contractor	12"				Yes	37-63	113	-	4.3-7.5	10 Note 2	-	L	0	960	1920	0	1920	1	
				Export		AWC		12"-TW-161-SS4	SS304L	Sch10															
	A	Filter Train A Chamber 3 Inlet	17805-PR-PID-006 pg 1 of 2	Import	03-TP -180	Contractor	6"				Yes	37-63	113	-	0.5-1	14.5	-	L	250	314	314	314	314	1	
				Export		AWC		-	-	-															
	A	Filter Train A Chamber 3 Air Scour Inlet	17805-PR-PID-006 pg 1 of 2	Import	03-TP -181	Contractor	6"				Yes	122	176	-	4.5	14.5	-	V	0	360	360	0	360	1	
				Export		AWC		03-XV-182	-	-															Note1, Flow in SCFM
	A	Filter Train A Chamber 3 Turbidity Effluent	17805-PR-PID-006 pg 1 of 2	Import	03-TP -185	AWC	1/4"	03-HV-1806	-	-	Yes	37-63	113	-	0.5-4.3	87	-	L	1.6	5.5	7.8	5.5	15.6	1	Flow in GPH
				Export		Contractor																			
C	A	Filter Train A Chamber 3 Effluent	17805-PR-PID-006 pg 2 of 2	Import	03-TP -182	AWC	6"	6"-TW-183-SS4	SS304L	Sch10	Yes	37-63	113	-	0.3	14.5	-	L	250	314	314	0	314	1	
				Export		Contractor																			
	A	Filter Train A Chamber 3 Rinse to Waste	17805-PR-PID-006 pg 2 of 2	Import	03-TP -183	AWC	6"	6"-WW-182-SS4	SS304L	Sch10	Yes	37-63	113	-	0.3	14.5	-	L	250	314	314	314	314	1	
				Export		Contractor																			
	A	Filter Train A Chamber 3 Backwash Water Supply	17805-PR-PID-006 pg 2 of 2	Import	03-TP -184	Contractor	12"				Yes	37-63	113	-	4.3-7.5	10 Note 2	-	L	0	960	1920	0	1920	1	
				Export		AWC		12"-TW-181-SS4	SS304L	Sch10															
	A	Filter Train A Backwash Waste	17805-PR-PID-006 pg 1 of 2	Import	03-TP -190	AWC	16"	-	-	-	Yes	37-63	113	-	0.5-1	14.5	-	L	0	960	1920	0	1920	1	
				Export		Contractor																			
	A	Filter Train B Chamber 1 Inlet	17805-PR-PID-007 pg 1 of 2	Import	03-TP -240	Contractor	6"				Yes	37-63	113	-	0.5-1	14.5	-	L	250	314	314	314	314	1	
				Export		AWC		-	-	-															
	A	Filter Train B Chamber 1 Air Scour Inlet	17805-PR-PID-007 pg 1 of 2	Import	03-TP -241	Contractor	6"				Yes	122	176	-	4.5	14.5	-	V	0	360	360	0	360	1	
				Export		AWC		03-XV-242	-	-															Note1, Flow in SCFM
	A	Filter Train B Chamber 1 Turbidity Effluent	17805-PR-PID-007 pg 1 of 2	Import	03-TP -245	AWC	1/4"	03-HV-2406	-	-	Yes	37-63	113	-	0.5-4.3	87	-	L	1.6	5.5	7.8	5.5	15.6	1	Flow in GPH
				Export		Contractor																			
D	A	Filter Train B Chamber 1 Effluent	17805-PR-PID-007 pg 2 of 2	Import	03-TP -242	AWC	6"	03-LV-246A	SS304L	Sch10	Yes	37-63	113	-	0.3	14.5	-	L	250	314	314	0	314	1	
				Export		Contractor																			
	A	Filter Train B Chamber 1 Rinse to Waste	17805-PR-PID-007 pg 2 of 2	Import	03-TP -243	AWC	6"	03-LV-246B	SS304L	Sch10	Yes	37-63	113	-	0.3	14.5	-	L	250	314	314	314	314	1	
				Export		Contractor																			
	A	Filter Train B Chamber 1 Backwash Water Supply	17805-PR-PID-007 pg 2 of 2	Import	03-TP -244	Contractor	12"	03-XV-247	SS304L	Sch10	Yes	37-63	113	-	4.3-7.5	10 Note 2	-	L	0	960	1920	0	1920	1	
				Export		AWC																			
E	A	Filter Train B Chamber 2 Inlet	17805-PR-PID-007 pg 1 of 2	Import	03-TP -260	Contractor	6"				Yes	37-63	113	-	0.5-1	14.5	-	L	250	314	314	314	314	1	
				Export		AWC		-	-	-															
	A	Filter Train B Chamber 2 Air Scour Inlet	17805-PR-PID-007 pg 1 of 2	Import	03-TP -261	Contractor	6"				Yes	122	176	-	4.5	14.5	-	V	0	360	360	0	360	1	
				Export		AWC		03-XV-262	-	-															Note1, Flow in SCFM
	A	Filter Train B Chamber 2 Turbidity Effluent	17805-PR-PID-007 pg 1 of 2	Import	03-TP -265	AWC	1/4"	03-HV-2606	-	-	Yes	37-63	113	-	0.5-4.3	87	-	L	1.6	5.5	7.8	5.5	15.6	1	Flow in GPH
				Export		Contractor																			
	A	Filter Train B Chamber 2 Effluent	17805-PR-PID-007 pg 2 of 2	Import	03-TP -262	AWC	6"	6"-TW-263-SS4	SS304L	Sch10	Yes	37-63	113	-	0.3	14.5	-	L	250	314	314	0	314	1	
				Export		Contractor																			
	A	Filter Train B Chamber 2 Rinse to Waste	17805-PR-PID-007 pg 2 of 2	Import	03-TP -263	AWC	6"	6"-WW-262-SS4	SS304L	Sch10	Yes	37-63	113	-	0.3	14.5	-	L	250	314	314	314	314	1	
				Export		Contractor																			

NOTES:
1. Flow in SCFM. Temperature based on expected air temperature, to be confirmed by the supplier. SG given in comparison to air at STP.
2. Backwash water supply MAWP is 10 psig due to the plenum. Pipe MAWP is 14.5 psig. Plenum over protection device is required.

ENGINEERS SEAL

REV	DESCRIPTION	DATE	DFT	CHK	APP
A	Issued for Review	22023-02-09	SB	AS	PC

REVISIONS

9087A 198 Street Langley, BC Canada V1M 3B1
Phone : 604-936-4217
www.awcsolutions.com

THIS DRAWING IS THE PROPERTY OF AWC AND CONTAINS PROPRIETARY AND CONFIDENTIAL INFORMATION WHICH MUST NOT BE DUPLICATED, USED OR DISCLOSED OTHER THAN EXPRESSLY AUTHORIZED BY AWC.

CLIENT	City & Borough of Wrangell
PROJECT	Wrangell WTP
TITLE	Battery Limit Table
SCALE	NTS
PROJECTION	
DEFAULT UNITS	INCH
SHEET SIZE	17 x 11
SHEET	3 OF 4
DRAWING NO.	17805-PR-BLT-001
REV	A

Rev	Service	P&ID	Import/ Export	Tie-in No.	Responsible Party (AWC/Contractor)	Pipework					Temperature - °F			Pressure - PSIG			Phase V or L	Flow - USGPM					Specific Gravity	Notes
						Size	Number	Specification	Schedule	A/Ground	Operating	Design	TEL	Operating	MAWP	Pump S/off		Min	Normal	Max	Start-up	Design		
A	Filter Train B Chamber 2 Backwash Water Supply	17805-PR-PID-007 pg 1 of 2	Import	03-TP -264	Contractor	12"	12"-TW-261-SS4	SS304L	Sch10	Yes	37-63	113	-	4.3-7.5	10 Note 2	-	L	0	960	1920	0	1920	1	
			Export		AWC																			
A	Filter Train B Chamber 3 Inlet	17805-PR-PID-007 pg 1 of 2	Import	03-TP -280	Contractor	6"				Yes	37-63	113	-	0.5-1	14.5	-	L	250	314	314	314	314	1	
			Export		AWC		-	-	-															
A	Filter Train B Chamber 3 Air Scour Inlet	17805-PR-PID-007 pg 1 of 2	Import	03-TP -281	Contractor	6"				Yes	122	176	-	4.5	14.5	-	V	0	360	360	0	360	1	
			Export		AWC		03-XV-282	-	-															Note1, Flow in SCFM
A	Filter Train B Chamber 3 Turbidity Effluent	17805-PR-PID-007 pg 1 of 2	Import	03-TP -285	AWC	1/4"	03-HV-2806	-	-	Yes	37-63	113	-	0.5-4.3	87	-	L	1.6	5.5	7.8	5.5	15.6	1	Flow in GPH
			Export		Contractor																			
A	Filter Train B Chamber 3 Effluent	17805-PR-PID-007 pg 2 of 2	Import	03-TP -282	AWC	6"	6"-TW-283-SS4	SS304L	Sch10	Yes	37-63	113	-	0.3	14.5	-	L	250	314	314	0	314	1	
			Export		Contractor																			
A	Filter Train B Chamber 3 Rinse to Waste	17805-PR-PID-007 pg 2 of 2	Import	03-TP -283	AWC	6"	6"-WW-282-SS4	SS304L	Sch10	Yes	37-63	113	-	0.3	14.5	-	L	250	314	314	314	314	1	
			Export		Contractor																			
A	Filter Train B Chamber 3 Backwash Water Supply	17805-PR-PID-007 pg 2 of 2	Import	03-TP -284	Contractor	12"				Yes	37-63	113	-	4.3-7.5	10 Note 2	-	L	0	960	1920	0	1920	1	
			Export		AWC		12"-TW-281-SS4	SS304L	Sch10															
A	Filter Train B Backwash Waste	17805-PR-PID-007 pg 1 of 2	Import	03-TP -290	AWC	16"	-	-	-	Yes	37-63	113	-	0.5-1	14.5	-	L	0	960	1920	0	1920	1	
			Export		Contractor																			
A	Rapid Mixer Tank Overflow 2	17805-PR-PID-002 pg 2 of 2	Import	01-TP -027	AWC	10"	-	-	-	Yes	37-63	113	-	0.5-1	10	-	L	0	0	800	0	800	1	
			Export		Contractor																			

NOTES:
1. Flow in SCFM. Temperature based on expected air temperature, to be confirmed by the supplier. SG given in comparison to air at STP.
2. Backwash water supply MAWP is 10 psig due to the plenum. Pipe MAWP is 14.5 psig. Plenum over protection device is required.

ENGINEERS SEAL

REV	DESCRIPTION	DATE	DFT	CHK	APP
A	Issued for Review	09-Feb-23	SB	AS	PC

REVISIONS

9087A 198 Street Langley, BC Canada V1M 3B1
Phone : 604-936-4217
www.awcsolutions.com

THIS DRAWING IS THE PROPERTY OF AWC AND CONTAINS PROPRIETARY AND CONFIDENTIAL INFORMATION WHICH MUST NOT BE DUPLICATED, USED OR DISCLOSED OTHER THAN EXPRESSLY AUTHORIZED BY AWC.

CLIENT	City & Borough of Wrangell
PROJECT	Wrangell WTP
TITLE	Battery Limit Table
SCALE	NTS
PROJECTION	
DEFAULT UNITS	INCH
SHEET SIZE	17 x 11
SHEET	4 OF 4
DRAWING NO.	17805-PR-BLT-001
REV	A

Wrangell WTP

PROCESS DESCRIPTION

17805-PR-NAR-001

Project No: 17805

City & Borough of Wrangell

A	09-Feb-23	Issued for Review	SB	AS	PC
Rev	**Date**	**Rev Description**	**Originator**	**Checker**	**Approver**

CONTENTS

1. FACILITY OVERVIEW 3
1.1. Scope 3
1.2. Abbreviations/ Acronyms 3
2. FLOCCULATION AND DAF PROCESS 4
2.1. Reference Documents 4
2.2. Raw Water Flow Control and Rapid Mixer Pre-Treatment 4
2.3. Flocculation Chamber #1 5
2.4. Flocculation Chamber #2 5
2.5. DAF Clarifier 5
2.6. DAF Skimmer 6
2.7. Effluent Chamber 6
3. RECYCLE AND SATURATOR SYSTEM 7
3.1. Reference Documents 7
3.1. Recycle Pump 7
3.2. Saturator 7
4. AIR COMPRESSOR SYSTEM 8
4.1. Reference Documents 8
4.2. Air Compressor 8
5. DUAL MEDIA GRAVITY FILTER 8
5.1. Reference Documents 8
5.2. Filter 9
5.3. Backwash Cycle 9
5.4. Air Scour Blower 10

1. Facility Overview

1.1. Scope

The scope of the Wrangell WTP is to install one two stage rapid mix and flow distributor, three, parallel Flocculation and DAF (Dissolved Air Flotation) clarifier trains (1, 2 and 3) and two gravity filter trains (A and B) consisting of a total of six filters (three filters per train). Each of the DAF trains comprises of a dedicated recycle/saturator system which includes a single recycle pump and saturator vessel. Each of the six filters have independent effluent pipe spool for effluent, rinse, and backwash operations per compartment. The new trains are designed to operate with automated and manual controls. The equipment will come with a local control panel (located on DAF Tank #2) equipped with a PLC and HMI, and two remote control panels (each located on the two filter tanks). All panels will be accessible from the raised platform only.

.

This document describes the Process Control and Operation Philosophy of the following systems found in Wrangell packaged plant to be supplied by AWC.

- Rapid Mixer and Flow Distributor,
- Flocculation & DAF Clarifier,
- Dual Media Gravity Filter,
- Effluent and Filter to Waste Control and
- Backwash Supply (by others)

1.2. Abbreviations/ Acronyms

Abbreviation	Definition
DAF	Dissolved Air Flotation
HMI	Human Machine Interface
HOA	Hand/Off/Auto
ITP	Inspection Test Plan
LCP	Local Control Panel
MAWP	Maximum Allowable Working Pressure
P&ID	Piping and Instrumentation Diagram
PLC	Programmable Logic Controller
RCP	Remote Control Panel
SCADA	System Control and Data Acquisition

Abbreviation	Definition
VFD	Variable Frequency Drive
WTP	Water Treatment Plant
NTU	Nephelometric Turbidity Unit

2. Flocculation and DAF Process

2.1. Reference Documents

Document Number
17805-PR-PID-001
17805-PR-PID-002
17805-PR-PID-010
17805-PR-BLT-001

2.2. Raw Water Flow Control and Rapid Mixer Pre-Treatment

The raw water supply is at constant pressure by others. The flow setpoint for the WTP is set remotely and AWC PLC receives the signal through the Plant SCADA. This signal will set the master flow controller (02-FFC-006) which becomes the flow setpoint (01-FC-014). AWC's PLC and HMI are both located on the local control panel (02-LCP-001).

The raw water first passes through a flow control loop consisting of a flow transmitter (01-FIT-013) and flow control valve (01-FV-014), both supplied by others. The flow control loop is controlled by AWC PLC and receives it setpoint from the system flow setpoint (01-FC-014). In between the flow transmitter and flow control valve, raw water is dosed with chemicals (by others), through injection quills (01-SP-0201, typical).

After being dosed and controlled the raw water enters the rapid mixer tank (01-TK-020) through a side entry. The rapid mixer tank (01-TK-020) has two chambers in series with baffles and is equipped with mechanical rapid mixers (01-MX-021 and 01-MX-022), one in each of the chambers. Here, water is vigorously agitated to ensure efficient chemical mixing. The mixer speed is controlled by a VFD (supplied and powered by others, setpoint and on/off command sent from the PLC via ethernet/IP) and includes a Hand-Off-Auto (HOA)switch. If the rapid mixer is in Hand, it will operate at a fixed speed set in the VFD. If in Auto, the rapid mixer will run at the speed setpoint set on AWC's HMI located on LCP (02-LCP-001). When the WTP flow rate is below 50% of the maximum design flow (i.e., ≤ 800gpm), only the second stage rapid mixer (01-MX-022) is required to be operational. Water level in the rapid mixer tank is constantly monitored with a level transmitter (01-LIT-020).

From the rapid mixer tank, chemically mixed water flows into a flow distributor tank (01-TK-023). This tank has three troughs on its side walls equipped with adjustable weir plates. Water pours over the

adjustable weirs getting equally distributed. Each of the troughs is connected to a DAF tank. Thereby, the flow distributor tank distributes the water flow, evenly among the online DAF units. The number of DAF units to be required online is selected by the Operator via switches on AWC LCP (02-LCP-001).

2.3. Flocculation Chamber #1

After flow distribution, water enters each DAF train by gravity flow through an on/off valve (02-XV-104, typical). When the inlet on/off valve is closed the before mentioned flow distributor splits the flow to the remaining trains. Water then enters flocculation chamber #1 (02-TK-102, typical) through an inlet baffle. The inlet baffle prevents short circuiting through flocculation chamber #1 and has a manual drain valve (02-HV-1020, typical) for cleaning purposes. Flocculation chamber #1 contains a mechanical mixer (02-MX-103, typical). The flocculator mixer speed is controlled by a VFD (supplied and powered by others, setpoint and on/off command sent from the PLC via ethernet/IP) and includes a hand switch located. If the flocculator mixer is in Hand, it will operate at a fixed speed set in the VFD. If in Auto, the flocculator mixer will run at a speed setpoint set on AWC's HMI. Flocculation chamber #1 has a manual drain valve (02-HV-1021, typical) for cleaning purposes.

2.4. Flocculation Chamber #2

Water flows from flocculation chamber #1 (02-TK-102, typical) through the bottom of the chamber and enters the flocculation chamber #2 (02-TK-104, typical). Flocculation chamber #2 contains a mechanical mixer (02-MX-105, typical). The flocculator mixer speed is controlled by a VFD (supplied and powered by others, setpoint and on/off command sent from the PLC via ethernet/IP) and includes a hand switch. If the flocculator mixer is in Hand, it will operate at a fixed speed set in the VFD. If in Auto, the flocculator mixer will run at a speed setpoint set on AWC's HMI.

Flocculated water overflows from chamber #2 into a flocculation effluent chamber. Effluent chamber contains a manual drain valve (02-HV-1041, typical) for cleaning purposes.

2.5. DAF Clarifier

After Flocculation Chamber #2, water passes through a series of baffles that minimizes flow mal distribution across the tank width and causes the flow to enter at the bottom of the DAF contact zone of the DAF clarifier (02-TK-110, typical). The contact zone is where the high-pressure air saturated recycle water flow is introduced through two specific custom designed manifolds that split the recycle flow in 67% and 33% portions. The contact zone has a manual drain valve (02-HV-1041, typical) for cleaning purposes. Each manifold has its own manual isolation butterfly valve (02-HV-1101/1102, typical). During normal operation both manifolds will be used. However, during lower flows, only one manifold may need to be used. The Operator is to manually isolate one manifold if the train is required to consistently accept flow lower than 67% of design flow.

The custom designed manifolds are equipped with an array of custom fixed orifice nozzles. As the high-pressure air saturated recycle flow exits each nozzle the sudden decrease in pressure causes the dissolved air to come out of solution in the form of microbubbles. Careful design of the baffle area and orientation of the inlet nozzles eliminates the potential for turbulent recycle flows to damage the incoming flocs.

Air microbubbles of approximately 30 - 50 microns in diameter attach to the flocs rendering them buoyant. The contact zone is bounded by an inclined baffle which decelerates the flow allowing good contact and eliminates the potential for turbulence in the clarifier area that can cause particulates to

get caught in the sub-natant flow. As the flow passes over the top of the inlet baffle, the buoyant flocs rise to the surface and form a floating sludge layer (known as the float).

As the float travels to the surface, clarified water travels downward to the bottom of the clarifier where “collector” laterals transfer the water (sub-natant) to the effluent chamber. The collectors are designed to provide a certain headloss and minimize mal-distribution in the downward sub-natant flow eliminating any potential for short circuiting/turbulence creating a clarifier zone that uniformly maximizes the particulate separation across the entire area.

The DAF clarifier tank (02-TK-110, typical) includes a manual drain valve (02-HV-1103, typical) for cleaning purposes.

2.6. DAF Skimmer

The float is periodically removed by a mechanical surface skimmer (02-SKM-111, typical). The skimmer drive speed is controlled by a VFD (supplied and powered by others, setpoint and on/off command sent from the PLC via ethernet/IP) and includes a hand switch. If the skimmer is in Hand, it will operate at a fixed speed set in the VFD. If in Auto, the skimmer will run at a speed setpoint set on AWC’s HMI.

When activated, the skimmer pushes the float into the sludge collection trough, where it drains to waste. The duration and frequency of operation of the skimmer are adjustable through the HMI. On plant shutdown the skimmer will continue to operate for an adjustable period to ensure all float is removed from the surface of the DAF unit. At a minimum, skimmer will travel the length of DAF on shutdown.

A float wash bar with solenoid on/off control valve (02-UV-114) is fitted within the DAF float trough to assist in the removal of the float from the trough. Float wash water comes from the plant domestic supply. The float wash bar valve has a hand switch located on the AWC LCP (02-LCP-001). In Auto, the duration and frequency of operation of the spray bar are adjustable through the HMI. In Hand, the solenoid will be open. On plant shut down the float wash bar will continue to operate for an adjustable period (set through the HMI) to ensure float buildup is removed.

2.7. Effluent Chamber

The effluent chamber (01-TK-119, typical) receives the clarified water from the collectors. The recycle source is from this chamber. Recycle water leaves effluent chamber through the manual isolation butterfly valve (02-HV-1190, typical). This chamber includes a level transmitter (02-LIT-119, typical) for continuous water level monitoring. Clarified water passes over the adjustable effluent weir and into the effluent break trough. Weir height determines the water level in the DAF clarifier and is adjusted at start-up to maintain an optimal level from low flow to design flow. Clarified water leaves the effluent break trough through the manual effluent isolation valve (02-HV-1192, typical). The effluent chamber is equipped with an overflow trough. Effluent chamber has a manual drain valve (02-HV-1191, typical) for cleaning purposes.

3. Recycle and Saturator System

3.1. Reference Documents

Document Number
17805-PR-PID-003
17805-PR-BLT-001

3.1. Recycle Pump

The recycle pump (02-P-120, typical) NPSH and supply is from the effluent chamber. It works on VFD (supplied and powered by others, setpoint and on/off command sent from the PLC via ethernet/IP) and is set to control the water level inside the saturator (02-SAT-125, typical). The recycle flow rate will be approximately 10% of the influent flow. Flowrate is monitored with magnetic flowmeter (02-FIT- 126, typical). Pump has a hand switch. In Hand, it will operate at a fixed flow set in the VFD.

The pump has inlet and outlet pressure gauges (02-PI-121, typical) and pressure transmitters (02-PT-122, typical) to monitor the suction and discharge pressures, respectively. The pump includes manual isolation valves (02-HV-1201, typical) and a check valve (02-CV-1204, typical) prevents backflow into the pump. A manual drain valve (02-HV-1205, typical) is located between the pump and saturator line.

3.2. Saturator

Pressurized water enters the saturator (02-SAT-125, typical), supplied by the recycle pump. Water is sprayed into the top of saturator and flows downward over exposed tri-pack media.

Compressed air is introduced to the top of saturator and the air pressure is maintained by a manual pressure regulating valve (02-PCV-131, typical). Air line includes a solenoid valve (02-XV-132, typical) to control air flow into the saturator. Solenoid valve includes a hand switch located on AWC control panel (02-LCP-001). When in Hand, solenoid is open. When placed in Auto, solenoid is controlled by the PLC and is open if the associated DAF train is in service. Air inlet line includes a check valve (02-CV-1260, typical) to prevent backflow and isolation valve (02-HV-1261, typical).

As water passes through the media it becomes fully saturated with air and collects in a pool at the bottom of saturator. Water level can be observed locally through the level gauge (02-LI-129, typical) and is monitored with level transmitter (02-LIT-128, typical). Saturated water flows out through a on/off actuated butterfly valve (02-XV-125, typical) It should be noted that this is a modulating valve as the operation requires slow open for the level recovery sequence).

The saturator includes a pressure gauge (02-PI-130, typical) for local pressure reading. A pressure safety valve (02-PSV-125, typical) will keep the internal pressure well below MAWP for the saturator. The saturator is equipped with an inlet valve (02-HV-1251, typical) and a manual drain valve (02-HV-1262, typical) for draining purposes.

4. Air Compressor System

4.1. Reference Documents

Document Number
17805-PR-PID-004
17805-PR-BLT-001

4.2. Air Compressor

Air is compressed using a compressor package having two compressors (08-AC-810/820) arranged in lead/lag configuration and a common air receiver (08-REC-815). Compressor motor is turned on and off based on the line pressure measured by pressure switch within the package (08-PSH-812/813). The second compressor will come in service if first compressor is unable to maintain the line pressure.

Compressed air is stored in the receiver (08-REC-815). The receiver includes an automatic drain valve (08-XV-819). The drain valve is solenoid controlled based on an adjustable timer. If additional draining is required during shutdown or cleaning, the receiver includes a manual drain valve (08-HV-8154).

A pressure safety valve (08-PSV-815) is included on the receiver to ensure that pressure stays well below the MAWP. A pressure indicator (08-PI-814) on the vessel is used to visually inspect receiver pressure.

Compressed air is filtered with general purpose air filter (08-F-816), high efficiency coalescing air filter (08-F-817) and activated carbon air filter (08-F-818). These filters are equipped with differential pressure indicators (08-PDI-818, typical) to visually inspect the pressure loss across, an indication of filter clogging. Once the differential pressure increases the recommended value, filter needs to be replaced. A pressure indicator (08-PI-820) is included downstream of the filters for inspecting the line pressure. Compressed air is piped to the inlet of the saturators by others.

5. Dual Media Gravity Filter

5.1. Reference Documents

Document Number
17805-PR-PID-005
17805-PR-PID-006
17805-PR-PID-007
17805-PR-BLT-001

5.2. Filter

Clarified water from the on-line DAF tanks will flow into a common header supplied by others. The clarified water is distributed into the online gravity filter tanks for final polishing. In total there are six filter chambers (03-TK-140, typical; three per filter tanks A and B), and the number of filter chambers required to be online is selected by the Operator through the HMI.

In service sequence, the clarified water flows through an on/off filter inlet valve (03-XV-140, typical) into a filter influent trough as it enters the filter chamber (03-TK-140, typical). Water then overflows from the influent filter trough into the filter chamber. The influent filter trough has an adjustable weir plate on its side wall over which water flows. It is adjusted at start-up to split the flows equally to each filter and to ensure uniform flow across the wall. The filter contains dual media, i.e., anthracite and sand. The filtered water is collected through an array of 0.2 mm, slotted polypropylene nozzles at the base of the filter. The filter operating level is constantly monitored by a level transmitter (03-LIT-141, typical) and adjusted by level controllers (03-LC-146A/B, typical). The controllers modulate the level control filter (03-LV146A, typical) and rinse to waste valves (03-LV-146B, typical) to maintain constant filter level during filtration and filter to waste operations.

Pressure transmitter (03-PT-143, typical) installed in the filter plenum chambers constantly monitors liquid head loss in the filters. A pressure gauge (03-PI-144, typical) is included for visually inspecting the pressure and confirming pressure transmitter reading. An increase in head loss (meaning a low pressure reading) usually means the filter media is plugged with particulate matter and require backwashing. This pressure transmitter provides a second function as pressure protection for the filter underdrain during the backwash sequence. When in backwash, if the pre-set pressure is exceeded, the backwash water supply valve (03-XV-147, typical) is closed immediately, and a request is sent to Plant SCADA to stop the backwash flow. A turbidimeter (03-AE-145, typical) constantly monitors filtered water turbidity, backwash is initiated when the turbidity is outside the acceptable range. The filter chamber includes a drain valve (03-HV-1401, typical) with a street elbow for cleaning purposes. Access manways are provided under the filter plenums for inspection and maintenance.

5.3. Backwash Cycle

Backwash cycle is triggered by high turbidity, loss of head, a timer or manual initiation from the HMI. Turbidimeter (03-AE-145, typical) under the filter plenum monitors turbidity of the effluent and will trigger backwash cycle when turbidity exceeds the allowable limit. Pressure transmitter (03-PT-143, typical) under the plenum will trigger backwash if loss of head exceeds the allowable value. A timer set via the HMI will begin backwash cycle if it has not been triggered by either loss of head or turbidity within the specified period. Lastly, backwash can be started manually by the Operator through the HMI.

When the backwash cycle is started, the PLC closes the filter influent valve (03-XV-140, typical) and effluent valve (03-LV-146A, typical). Backwash water and scour air at the required flowrates are by others. The backwash cycle comprises of a sequence of steps described below. Depending on the backwash sequence steps, the backwash water supply (03-XV-147, typical) and the air scour (03-XV-142, typical) on/off valves are opened and closed by the PLC.

1. Once the filter backwash mode is initiated: The PLC closes filtrate turbidity sample valve (03-XV-145, typical), filter inlet valve (03-XV-140, typical), and effluent valve (03-LV-146A, typical).
2. Rinse to waste valve (03-LV-146B, typical) is opened and the filter is drained to a pre-set level (adjustable) setpoint.

3. Upon reaching the drain setpoint, the rinse to waste valve (03-LV-146B, typical) is closed, a signal is sent by the PLC to the Plant SCADA to start the air scour blower. The air scour inlet valve (03-XV-142, typical) is opened.
4. Air scouring of the filter is allowed for a pre-set (adjustable) period.
5. Then, the PLC sends a signal to the Plant SCADA to supply backwash water at low flowrate. The backwash water supply on/off valve (03-XV-147, typical) opens to allow the water for backwashing. Air scour would continue for a pre-set (adjustable) period.
6. Once the air scour and water low flow timer gets elapsed, the PLC would send a signal to Plant SCADA to stop the air scour blower and will close the air scour valve (03-XV-142, typical). Low flow backwash will continue until a pre-set (adjustable) level is reached.
7. Now, the the PLC sends a signal to the Plant SCADA to supply backwash water at high flowrate. The backwash water supply on/off valve (03-XV-147, typical) will continue to remain open. A pre-set (adjustable) timer is started and backwash water overflows to the backwash trough and leaves the tank flowing into the backwash waste EQ tank.
8. Once the backwash high flow timer gets elapsed, the the PLC sends a signal to the Plant SCADA to stop the supply of backwash water. The backwash water supply on/off valve (03-XV-147, typical) is closed, and the filter media is let to settle for a pre-set (adjustable) period.
9. Now, the rinse to waste valve (03-LV-146B, typical) is opened to allow for a slow drop in water level until it reaches a pre-set (adjustable) setpoint, at that point the filter inlet valve (03-XV-140, typical) is opened to allow clarified water to flow in for a pre-set (adjustable) period. The rinse to waste valve will modulate to maintain the tank level setpoint.
10. Then, solenoid turbidity sample valve (03-XV-145, typical) is opened.
11. If filter effluent turbidity is lower than setpoint for pre-set value (adjustable), treated water valve (03-LV-146A, typical) opens and starts to modulate to maintain tank level. The rinse to waste valve (03-LV-146B, typical) is closed. Filter effluent now flows to the clear well.

NOTE: (1) Only one filter chamber can backwash at a time. (2) The two backwash flowrates are setpoints, sent to the Plant SCADA by AWC's PLC. (3) Backwash water pressure to be limited at the maximum design pressure of filter plenum (i.e., 10 psig at the backwash water supply on/off valve, 03-XV-147, typical).

5.4. Air Scour Blower

Scour air for the filter media backwash is provided by others. The PLC to send a backwash signal and blower start/stop signal through the Plant SCADA via ethernet/IP.

PROJECT NAME: CITY & BOROUGH OF WRANGELL

PROJECT NO.: 17805

DOCUMENT NAME: ELECTRICAL LOAD LIST

DOCUMENT NO.: 17805-EL-LST-001

A	19-Jan-23	Issued for Review	CW	EB	PC
Rev	**Date**	**Revision Description**	**Originator**	**Checker**	**Approver**

REV #	Equipment: Tag Description	Tag #	Quantity	Load Duty	Watts (A)	Motor - Hp (B)	Voltage (C)	Motor Efficency% (D)	Power Factor 1>X (E)	Motor FLA CSA 22.1 (F)	Phase (G)	Consumed Load: Continuous (H) kVA=(C*F*SQRT(G)/1000)	Intermittent (I) kVA=(C*F*SQRT(G)/1000)	Standby (J) kVA=(C*F*SQRT(G)/1000)	Phase 2 Continuous (H) kVA=(C*F*SQRT(G)/1000)	Phase 2 Intermittent (I) (L) kVA=(C*F*SQRT(G)/1000)	Phase 2 Standby (J) (M) kVA=(C*F*SQRT(G)/1000)	Notes
A	UPS	UPS-001	1	Continuous	1500		120	100%	1	#N/A	1	1.50						
A	Train #1 Trough Spray Valve	02-UV114	1	Intermittent	6		120	100%	1	#N/A	1		0.006					
A	Train #2 Trough Spray Valve	02-UV214	1	Intermittent	6		120	100%	1	#N/A	1		0.006					
A	Train #3 Trough Spray Valve	02-UV314	1	Intermittent	6		120	100%	1	#N/A	1		0.006					
A	Saturator #1 Recycle Valve (FL)	02-XV125	1	Intermittent	430		120	100%	1	#N/A	1		0.430					
A	Saturator #1 Compressed Air Solenoid Valve	02-XV132	1	Intermittent	70		120	100%	1	#N/A	1		0.070					
A	Saturator #2 Recycle Valve (FL)	02-XV225	1	Intermittent	430		120	100%	1	#N/A	1		0.430					
A	Saturator #2 Compressed Air Solenoid Valve	02-XV232	1	Intermittent	70		120	100%	1	#N/A	1		0.070					
A	Saturator #3 Recycle Valve (FL)	02-XV325	1	Intermittent	430		120	100%	1	#N/A	1		0.430					
A	Saturator #3 Compressed Air Solenoid Valve	02-XV332	1	Intermittent	70		120	100%	1	#N/A	1		0.070					
A	9" Cooling Fan	FAN-001	1	Continuous	19.2		120	100%	1	#N/A	1	0.019						

x =	100	Estimated Operational Running Load (Est. (H*X%) +(I*Y%)):	2.3	kVA	Phase 1	0.0	kVA	Phase 2	Site Voltage:	120	Total:	1.5	1.5	0.0	0.0	0.0	0.0
y =	50	Peak Load (Est. (H*X%)+(I*%Y)+(J%Z)):	2.3	kVA	Phase 1	0.0	kVA	Phase 2	Site Phases:	1	Total Load kVA:	3.04					
z =	0	Estimated Generator Load VA:	3.0	kVA	Phase 1	0.0	kVA	Phase 2	*Main Incoming Service Amps:			25.31					

NOTES:*Feeder equipment to be sized by others

ENGINEERS SEAL

PERMIT TO PRACTICE

REV	DESCRIPTION	DATE	BY	CHK	APP
A	Issued For Review	19-Jan-23	CW	EB	PC

REVISIONS

9087A 198 Street Langley, BC Canada V1M 3B1
Phone : 604-936-4217
www.awcsolutions.ca

THIS DRAWING IS THE PROPERTY OF AWC AND CONTAINS PROPRIETARY AND CONFIDENTIAL INFORMATION WHICH MUST NOT BE DUPLICATED, USED OR DISCLOSED OTHER THAN EXPRESSLY AUTHORIZED BY AWC.

CLIENT: CITY & BOROUGH OF WRANGELL

PROJECT: WRANGELL WTP

TITLE: ELECTRICAL LOAD LIST - LCP-001

SCALE	PROJECTION	DEFAULT UNITS	SHEET SIZE	SHEET
NTS		mm	11 x 17	1 OF 3

DRAWING NO.: 39837-EL-LST-001-01 REV: A

REV #	Tag Description	Tag #	Quantity	Load Duty	Watts	Motor - Hp	Voltage	Motor Efficency%	Power Factor 1>X	Motor FLA CSA 22.1	Phase	Consumed Load: Continuous	Consumed Load: Intermittent	Consumed Load: Standby	Consumed Load: Phase 2 Continuous (H)	Consumed Load: Phase 2 Intermittent (I)	Consumed Load: Phase 2 Standby (J)	Notes
	Equipment				A	B	C	D	E	F	G	H	I	J	K	L	M	
												kVA=(C*F*SQRT(G)/1000)	kVA=(C*F*SQRT(G)/1000)	kVA=(C*F*SQRT(G)/1000)	kVA=(C*F*SQRT(G)/1000)	kVA=(C*F*SQRT(G)/1000)	kVA=(C*F*SQRT(G)/1000)	
A	UPS	UPS-101	1	Continuous	3000		120	100%	1	#N/A	1	3.000						
A	Filter #1 Clarified Water Inlet Valve (FL)	03-XV140	1	Intermittent	430		120	100%	1	#N/A	1		0.430					
A	Filter #2 Clarified Water Inlet Valve (FL)	03-XV160	1	Intermittent	430		120	100%	1	#N/A	1		0.430					
A	Filter #3 Clarified Water Inlet Valve (FL)	03-XV180	1	Intermittent	430		120	100%	1	#N/A	1		0.430					
A	Filter #1 Turbidity Sample Solenoid Valve	03-AV145	1	Intermittent	70		120	100%	1	#N/A	1		0.070					
A	Filter #2 Turbidity Sample Solenoid Valve	03-AV165	1	Intermittent	70		120	100%	1	#N/A	1		0.070					
A	Filter #3 Turbidity Sample Solenoid Valve	03-AV185	1	Intermittent	70		120	100%	1	#N/A	1		0.070					
A	9" Cooling Fan	FAN-101	1	Continuous	19.2		120	100%	1	#N/A	1	0.019						

x =	100	Estimated Operational Running Load (Est. (H*X%) +(I*Y%)):	3.8	kVA	Phase 1	0.0	kVA	Phase 2	Site Voltage:	120	Total:	3.0	1.5	0.0	0.0	0.0	0.0
y =	50	Peak Load (Est. (H*X%)+(I*%Y)+(J%Z)):	3.8	kVA	Phase 1	0.0	kVA	Phase 2	Site Phases:	1	Total Load kVA:	4.52					
z =	0	Estimated Generator Load VA:	4.5	kVA	Phase 1	0.0	kVA	Phase 2	*Main Incoming Service Amps:			37.66					

NOTES:*Feeder equipment to be sized by others

ENGINEERS SEAL

PERMIT TO PRACTICE

REV	DESCRIPTION	DATE	BY	CHK	APP
A	Issued For Review	18-Jan-23	CW	EB	EC

REVISIONS

9087A 198 Street Langley, BC Canada V1M 3B1
Phone : 604-936-4217
www.awcsolutions.ca

THIS DRAWING IS THE PROPERTY OF AWC AND CONTAINS PROPRIETARY AND CONFIDENTIAL INFORMATION WHICH MUST NOT BE DUPLICATED, USED OR DISCLOSED OTHER THAN EXPRESSLY AUTHORIZED BY AWC.

CLIENT: CITY & BOROUGH OF WRANGELL

PROJECT: WRANGELL WTP

TITLE: ELECTRICAL LOAD LIST - RCP-101

SCALE	PROJECTION	DEFAULT UNITS	SHEET SIZE	SHEET
NTS		mm	11 x 17	2 OF 3

DRAWING NO.: 39837-EL-LST-001-02 REV: A

	REV #	Tag Description	Tag #	Quantity	Load Duty	Watts	Motor - Hp	Voltage	Motor Efficency%	Power Factor 1>X	Motor FLA CSA 22.1	Phase	Consumed Load: Continuous	Consumed Load: Intermittent	Consumed Load: Standby	Consumed Load: Phase 2 Continuous (H)	Consumed Load: Phase 2 Intermittent (I)	Consumed Load: Phase 2 Standby (J)	Notes
		Equipment											H	I	J	K	L	M	
						A	B	C	D	E	F	G	kVA=(C*F*SQRT(G)/1000)	kVA=(C*F*SQRT(G)/1000)	kVA=(C*F*SQRT(G)/1000)	kVA=(C*F*SQRT(G)/1000)	kVA=(C*F*SQRT(G)/1000)	kVA=(C*F*SQRT(G)/1000)	
A	A	UPS	UPS-201	1	Continuous	3000		120	100%	1	#N/A	1	3.000						
	A	Filter #4 Clarified Water Inlet Valve (FL)	03-XV240	1	Intermittent	430		120	100%	1	#N/A	1		0.430					
	A	Filter #5 Clarified Water Inlet Valve (FL)	03-XV260	1	Intermittent	430		120	100%	1	#N/A	1		0.430					
	A	Filter #6 Clarified Water Inlet Valve (FL)	03-XV280	1	Intermittent	430		120	100%	1	#N/A	1		0.430					
	A	Filter #4 Turbidity Sample Solenoid Valve	03-AV245	1	Intermittent	70		120	100%	1	#N/A	1		0.070					
	A	Filter #5 Turbidity Sample Solenoid Valve	03-AV265	1	Intermittent	70		120	100%	1	#N/A	1		0.070					
	A	Filter #6 Turbidity Sample Solenoid Valve	03-AV285	1	Intermittent	70		120	100%	1	#N/A	1		0.070					
B	A	9" Cooling Fan	FAN-201	1	Continuous	19.2		120	100%	1	#N/A	1	0.019						
C																			
D																			
E																			
	x =	100	Estimated Operational Running Load (Est. (H*X%) +(I*Y%)):	3.8	kVA	Phase 2	0.0	kVA	Phase 2	Site Voltage:	120	Total:	3.0	1.5	0.0	0.0	0.0	0.0	
	y =	50	Peak Load (Est. (H*X%)+(I*%Y)+(J%Z)):	3.8	kVA	Phase 2	0.0	kVA	Phase 2	Site Phases:	1	Total Load kVA:	4.52						
	z =	0	Estimated Generator Load VA:	4.5	kVA	Phase 2	0.0	kVA	Phase 2	*Main Incoming Service Amps:			37.66						

F

NOTES:*Feeder equipment to be sized by others

ENGINEERS SEAL

PERMIT TO PRACTICE

REV	DESCRIPTION	DATE	BY	CHK	APP
A	Issued For Review	18-Jan-23	CW	EB	EC

REVISIONS

9087A 198 Street Langley, BC Canada V1M 3B1
Phone : 604-936-4217
www.awcsolutions.ca

THIS DRAWING IS THE PROPERTY OF AWC AND CONTAINS PROPRIETARY AND CONFIDENTIAL INFORMATION WHICH MUST NOT BE DUPLICATED, USED OR DISCLOSED OTHER THAN EXPRESSLY AUTHORIZED BY AWC.

CLIENT: CITY & BOROUGH OF WRANGELL

PROJECT: WRANGELL WTP

TITLE: ELECTRICAL LOAD LIST - RCP-201

SCALE	PROJECTION	DEFAULT UNITS	SHEET SIZE	SHEET
NTS		mm	11 x 17	3 OF 3

DRAWING NO.: 39837-EL-LST-001-03 REV: A

PROJECT NAME: WRANGELL WTP

PROJECT NO.: 17805

DOCUMENT NAME: ELECTRICAL EQUIPMENT LIST

DOCUMENT NO.: 17805-EL-LST-003

A	27-Jan-23	ISSUED FOR APPROVAL	CW	EB	PC
REV	DATE	REVISION DESCRIPTION	ORIGINATOR	CHECKER	APPROVER

REV	Line Item #	MANUFACTURER	DESCRIPTION	EQUIPMENT NAME	MODEL/SERIES	Notes
A	1	Bel	Wall Mount Nema 4x SS 304 Enclosure	LCP-001	HD	
A	2	Bel	Wall Mount Nema 4x SS 304 Enclosure Double Door	RCP-101/RCP-201	HD	
A	3	Hoffman	10" Intake Grill with filter	--	HF Series	
A	4	Hoffman	10" Fan and Filter Nema 12 115 VAC, 128 CFM	--	HF Series	
A	5	Hoffman	Fan Shroud Nema 4x 5" SS 304	--	HF Series	
A	6	Lovato	40amp door mounted 10KA Disconnect switch	DIS-001,101,201	GA Series	
A	7	Lovato	Door Mounted Handle for Lovato Nema 4x	DIS-001,101,201	GA Series	
A	8	Allen Bradley	Human Machine Interface (15") Panel View Plus 7	--	Panel View Plus 7	
A	9	Allen Bradley	1769 CompactLogix,**3** MB Memory,Dual Ethernet Port - SD Card Supported - USB,	Rack-001A	CompactLogix Series	
A	10	Allen Bradley	1769 - Power Supply 120vac	Rack-001A	CompactLogix Series	
A	11	Allen Bradley	Point IO Ethernet Adapator	Rack-001B/002/003	1734 Point IO Series	
A	12	Allen Bradley	PLC Analog Input	Rack-001B/002/003	1734 Point IO Series	
A	13	Allen Bradley	PLC Analog Output	Rack-001B/002/003	1734 Point IO Series	
A	14	Allen Bradley	PLC Discrete Input	Rack-001B/002/003	1734 Point IO Series	
A	15	Allen Bradley	PLC Discrete Ouput	Rack-001B/002/003	1734 Point IO Series	
A	16	Allen Bradley	PLC Discrete Ouput	Rack-001B/002/003	1734 Point IO Series	
A	17	Toshiba	Toshiba 120vac True Online UPS	UPS-001,101,201	T1000 Series	
A	18	Weidmuller	Unmanaged Ethernet switch	02-NS-001,101,201	ECOLINE	
A	19	eWON	Flexy 205 (4* LAN) Ethernet Gateway	02-ES-001	Flexy	
A	20	Omron	G7S Forcibly Guided Contacts - Safety Relay for E-Stop Circuit	ESR-001,002,003	G7S	
A	21	Weidmuller	Mini Breakers, Single pole BR Series	CB-XXX	BR Series	
A	22	Weidmuller	Power Supply - 24VDC, 72W, Class 2	PS-002	Pro Eco Series	
A	23	Weidmuller	Pro Eco 24Vdc Power Supply	PS-001	Pro Eco Series	
A	24	Weidmuller	Surge Arrestor VPU AC II US 3 R 120/50	SP-001	VPU - Series	

PROJECT NAME: WRANGELL WTP

PROJECT NO.: 17805

DOCUMENT NAME: ELECTRICAL SPARE PARTS LIST

DOCUMENT NO.: 17805-EL-LST-011

A	02/02/23	ISSUED FOR REVIEW	CW	EBS	PC
REV	DATE	REVISION DESCRIPTION	ORIGINATOR	CHECKER	APPROVER

Spare Parts list

Rev	Line Item #	Manufacturer	Description	Part Identification No.	Quantity Recommended	Suggested Shelf Spare - Yes/No	Part of Proposal	Notes
A	1	Allen Bradley	Panel View Plus 7 Extended (15") (dc)	2711P-T15C21D8S	1	Yes	No	
A	2	Allen Bradley	1769 - CompactLogix CPU Module, 3 MB Memory	1769-L36ERM	1	Yes	No	
A	3	Allen Bradley	1769 - Power Supply 120vac	1769-PA2	1	Yes	No	
A	4	Allen Bradley	1734 - AENT Flex Ethernet Adapter	1734-AENT	2	Yes	No	
A	5	Allen Bradley	1734 - Remote IO Remote IO Analog Input	1734-IE8C	2	Yes	No	
A	6	Allen Bradley	1734 - Remote IO Analog Input	1734-IE4C	2	Yes	No	
A	7	Allen Bradley	1734 - Remote IO Analog Output	1734-OE4C	2	Yes	No	
A	8	Allen Bradley	1734 - Remote IO Analog Output	1734-OE2C	2	Yes	No	
A	9	Allen Bradley	1734 - Remote IO Discrete Input	1734-IB8	2	Yes	No	
A	10	Allen Bradley	1734 - Remote IO Discrete Input	1734-IB4	2	Yes	No	
A	11	Allen Bradley	1734 - Remote IO Discrete Output	1734-OB8	2	Yes	No	
A	12	Allen Bradley	1734 - Remote IO Discrete Output	1734-OB4	2	Yes	No	
A	13	Weidmuller	BR Series MCB 489 1P C 1Aamp	2477790000	1	Yes	No	
A	14	Weidmuller	BR Series MCB 489 1P C 2Aamp	2477830000	1	Yes	No	
A	15	Weidmuller	BR Series MCB 489 1P C 6Amp	2477870000	1	Yes	No	
A	16	Weidmuller	BR Series MCB 489 1P C 15Amp	2477930000	1	Yes	No	
A	17	Weidmuller	BR Series MCB 489 1P C 25Amp	2477960000	1	Yes	No	
A	18	Weidmuller	BR Series MCB 489 1P C 35A ACDC	2477990000	1	Yes	No	
A	19	Weidmuller	BR Series MCB 489 1P C 50A ACDC	2478010000	1	Yes	No	
A	20	Lovato	40amp door mounted 10KA Disconnect switch	GA040C	1	Yes	No	
A	21	Lovato	Door Mounted Handle for Lovato Nema 4x	GAX61	1	Yes	No	
A	22	Bussman	Glass Fuses 1/10 amp	AGC-1/10-R	2	Yes	No	Sold in Pack of 5
A	23	Bussman	Glass Fuses 1/2 amp	AGC-1/2-R	2	Yes	No	Sold in Pack of 5
A	24	Bussman	Glass Fuses 1 amp	AGC-1-R	2	Yes	No	Sold in Pack of 5
A	25	Bussman	Glass Fuses 2 amp	AGC-2-R	2	Yes	No	Sold in Pack of 5
A	26	Bussman	Glass Fuses 5 amp	AGC-5-R	2	Yes	No	Sold in Pack of 5
A	27	Bussman	Glass Fuses 10 amp	AGC-10-R	2	Yes	No	Sold in Pack of 5
A	28	Allen Bradley	3 Position, Non-Illuminated, Maintained	800FP-SM32	2	Yes	No	
A	29	Allen Bradley	2 Position, Non-Illuminated, Maintained	800FP-SM22	1	Yes	No	
A	30	Allen Bradley	Mushroom Head, Twist-to-Release	800FP-MT34	2	Yes	No	
A	31	Allen Bradley	22mm Pilot Light, White	800FP-P7	2	Yes	No	
A	32	Allen Bradley	22mm Pilot Light, Blue	800FP-P6	2	Yes	No	
A	33	Allen Bradley	LED 24V AC/DC, Blue	800F-N3W	2	Yes	No	
A	34	Allen Bradley	LED 120V AC/DC, White	800F-N5W	2	Yes	No	
A	35	Weidmuller	8 Port Unmanaged Switch	2682140000	1	Yes	No	
A	36	Weidmuller	PRO ECO 240W 24V 10A	1469490000	1	Yes	No	
A	37	Toshiba	Toshiba 1500VA UPS	T1SOA1500AXAR2	2	Yes	No	
A	38	Toshiba	Toshiba 3000VA UPS	T1SOA3000AXAR2	1	Yes	No	
A	39	Omron	G7S Forcibly Guided Contacts - Safety Relay for E-Stop Circuit	G7SA-4A2BDC24	1	Yes	No	
A	40	Weidmuller	Slimline Relays with Green Status Indication	1122770000	5	Yes	No	
A	41	Weidmuller	Surge Arrestor VPU AC II US 3 R 120/50	2730460000	3	Yes	No	
	42							
	43							
	44							
	45							
	46							
	47							
	48							

Note:
If additional spare parts are required, please provide the project number, quantity and spare part number in an e-mail to spareparts@awcsolutions.com

Phone : 604-936-4217
www.awcsolutions.com

PROJECT NAME: WRANGELL WTP
PROJECT NUMBER: 17805
DOCUMENT NO.: 17805-EL-SLD-001
REVISION: ISSUED FOR REVIEW
DOCUMENT NAME: SINGLE LINE DIAGRAM

THIS DRAWING IS THE PROPERTY OF AWC SOLUTIONS AND CONTAINS PROPRIETARY AND CONFIDENTIAL INFORMATION WHICH MUST NOT BE DUPLICATED, USED OR DISCLOSED OTHER THAN EXPRESSLY AUTHORIZED BY AWC WATER SOLUTIONS LTD

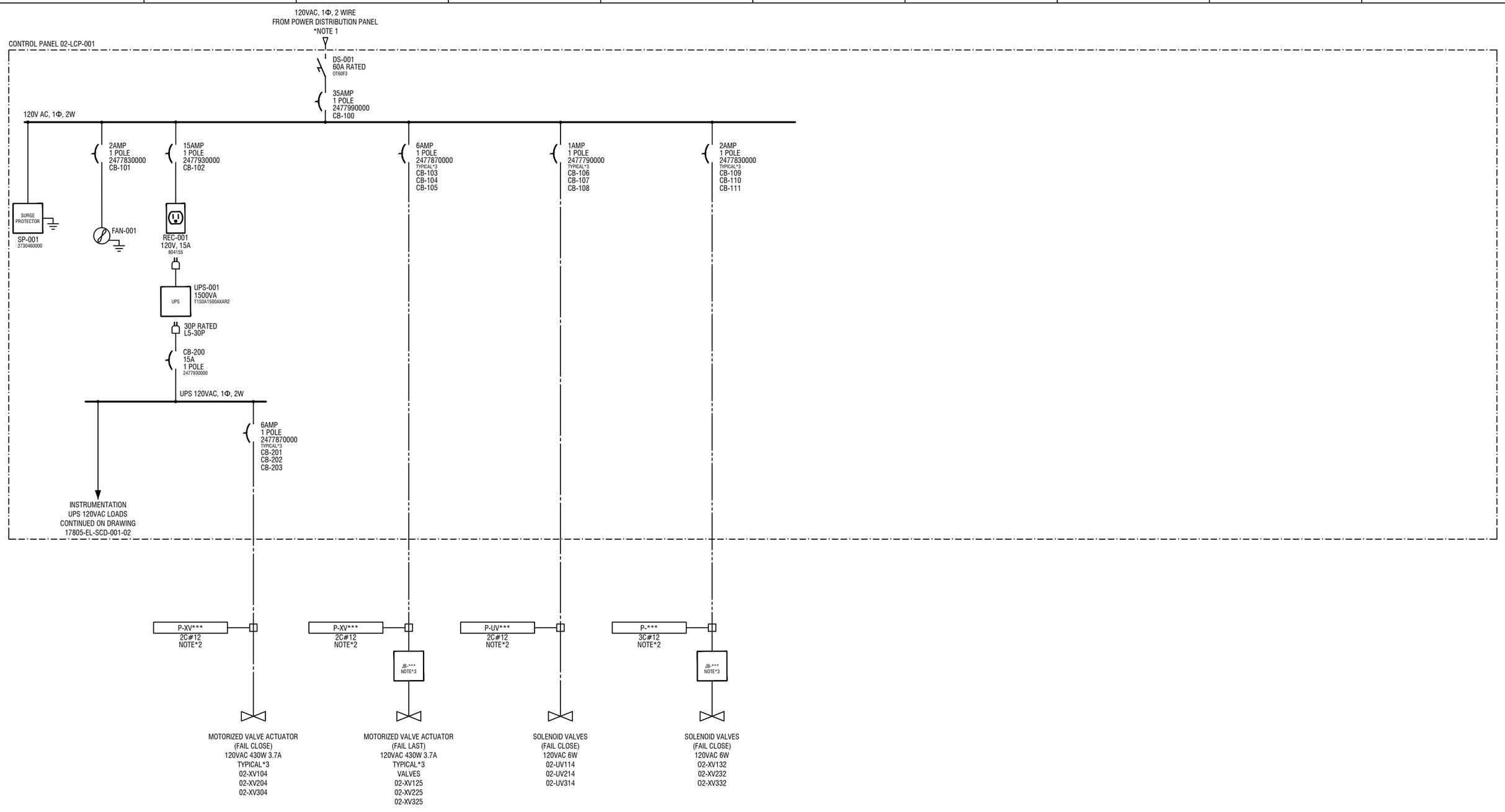

NOTES:
1. CABLE TO BE SIZED FOR VOLTAGE DROP AND INSTALLED BY OTHERS
2. "***" REPRESENTS THE NUMERICAL TAG NAME OF THE EQUIPMENT
3. JUNCTION BOX EQUIPMENT TAG NAMES ARE TO REFLECT THE SKID EQUIPMENT TAG NAME

ENGINEER'S SEAL

REV	DESCRIPTION	DATE	DFT	CHK	APP
A	ISSUED FOR REVIEW	23-JAN-23	BB	CW	PC

REVISIONS

9087A 198 Street Langley, BC Canada V1M 3B1
Phone : 604-936-4217
www.awcsolutions.com

THIS DRAWING IS THE PROPERTY OF AWC AND CONTAINS PROPRIETARY AND CONFIDENTIAL INFORMATION WHICH MUST NOT BE DUPLICATED, USED OR DISCLOSED OTHER THAN EXPRESSLY AUTHORIZED BY AWC.

CLIENT: CITY & BOROUGH OF WRANGELL

PROJECT: WRANGELL WTP

TITLE: SINGLE LINE DIAGRAM

SCALE	PROJECTION	DEFAULT UNITS	SHEET SIZE	SHEET
NTS		MM	17X11	1 OF 4

DRAWING NO. 17805-EL-SLD-001-01

REV A

WD_TB

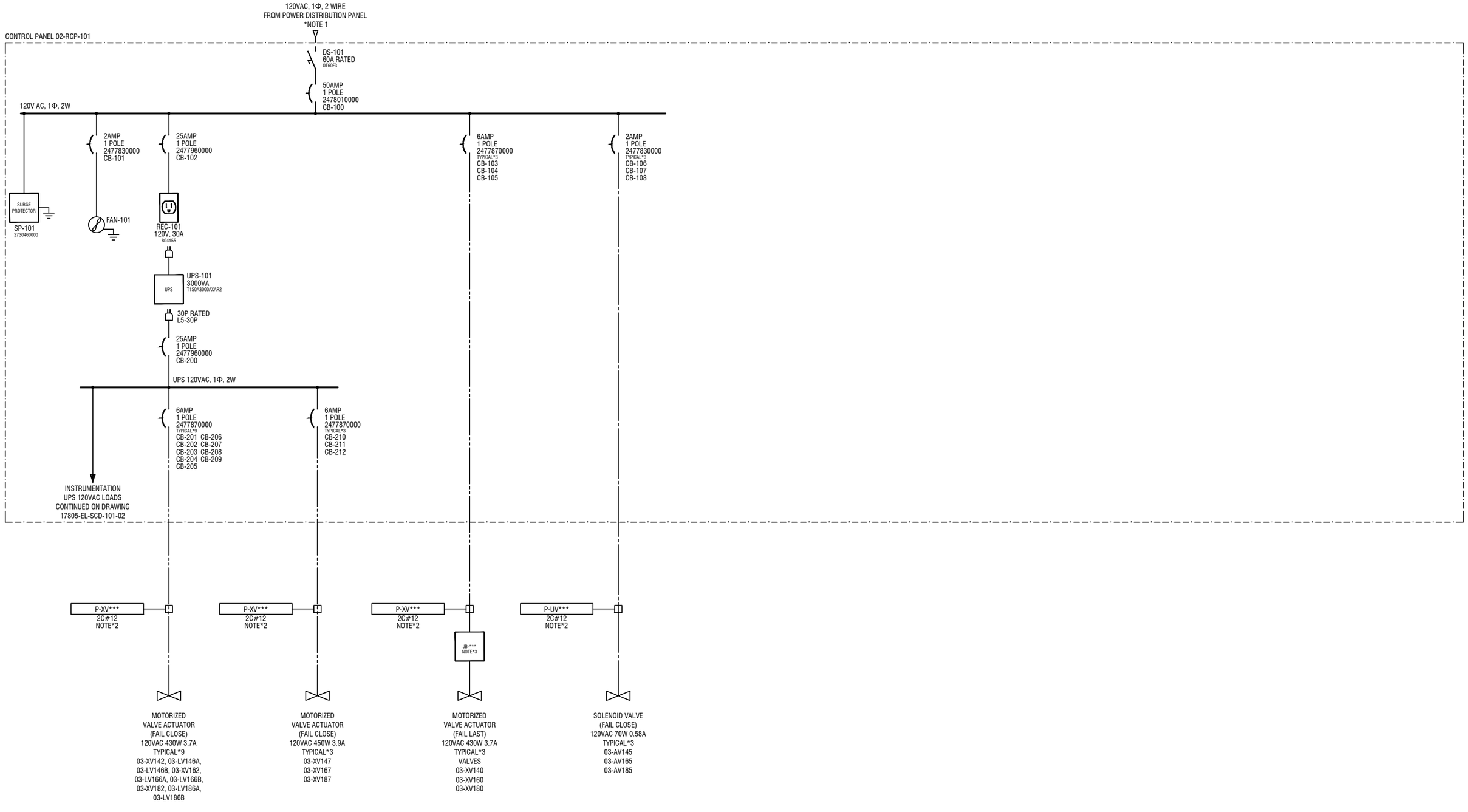

NOTES:
1. CABLE TO BE SIZED FOR VOLTAGE DROP AND INSTALLED BY OTHERS
2. ***** REPRESENTS THE NUMERICAL TAG NAME OF THE EQUIPMENT
3. JUNCTION BOX EQUIPMENT TAG NAMES ARE TO REFLECT THE SKID EQUIPMENT TAG NAME

ENGINEER'S SEAL

REV	DESCRIPTION	DATE	DFT	CHK	APP
A	ISSUED FOR REVIEW	23-JAN-23	SB	OW	PG

REVISIONS

9087A 198 Street Langley, BC Canada V1M 3B1
Phone : 604-936-4217
www.awcsolutions.com

THIS DRAWING IS THE PROPERTY OF AWC AND CONTAINS PROPRIETARY AND CONFIDENTIAL INFORMATION WHICH MUST NOT BE DUPLICATED, USED OR DISCLOSED OTHER THAN EXPRESSLY AUTHORIZED BY AWC.

CLIENT	CITY & BOROUGH OF WRANGELL
PROJECT	WRANGELL WTP
TITLE	SINGLE LINE DIAGRAM
SCALE	NTS
PROJECTION	
DEFAULT UNITS	MM
SHEET SIZE	17X11
SHEET	2 OF 4
DRAWING NO.	17805-EL-SLD-001-02
REV	A

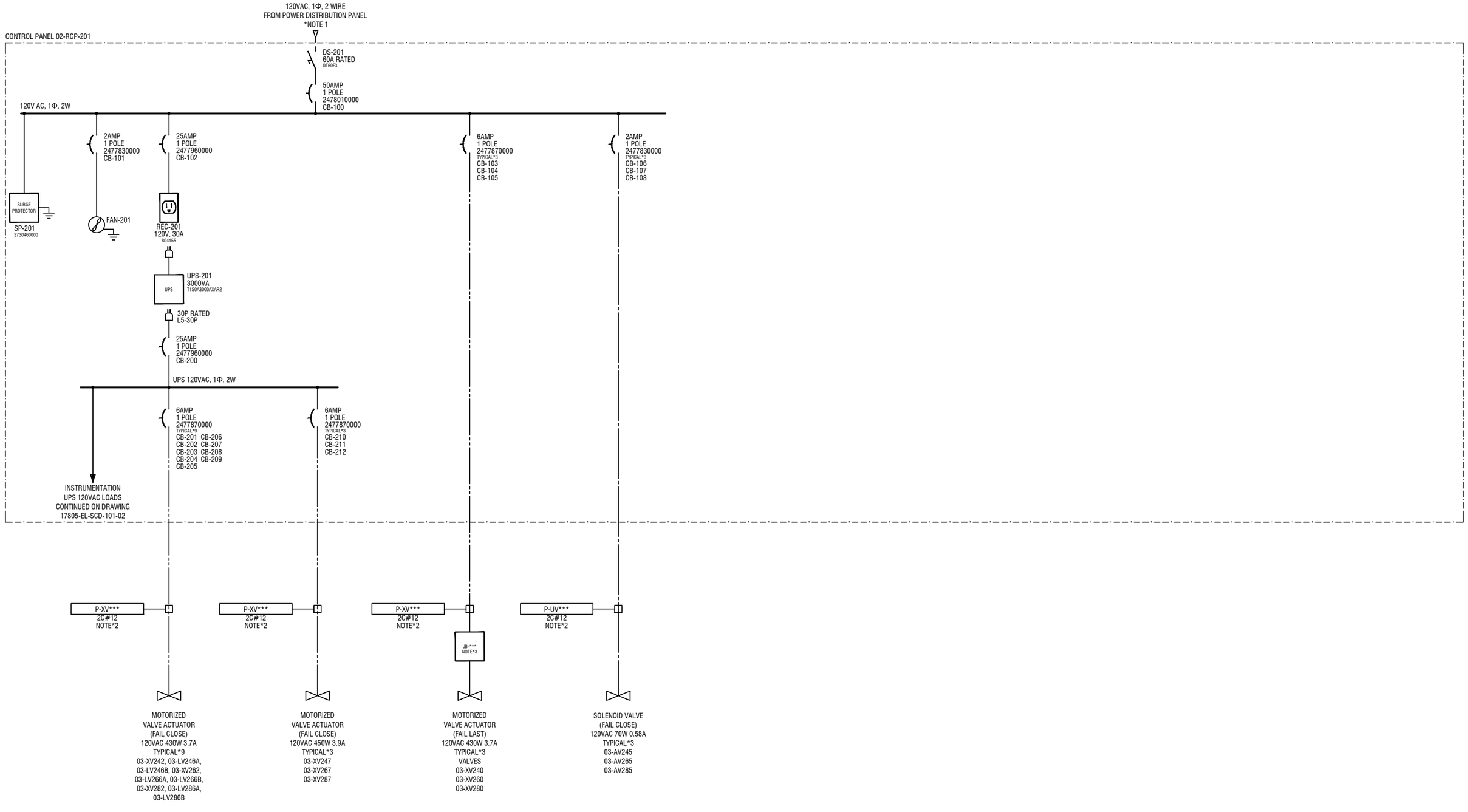

NOTES:
1. CABLE TO BE SIZED FOR VOLTAGE DROP AND INSTALLED BY OTHERS
2. ***** REPRESENTS THE NUMERICAL TAG NAME OF THE EQUIPMENT
3. JUNCTION BOX EQUIPMENT TAG NAMES ARE TO REFLECT THE SKID EQUIPMENT TAG NAME

ENGINEER'S SEAL

REV	DESCRIPTION	DATE	DFT	CHK	APP
A	ISSUED FOR REIVEW	23-JAN-23	SB	OW	PC

REVISIONS

AWC
9087A 198 Street Langley, BC Canada V1M 3B1
Phone : 604-936-4217
www.awcsolutions.com

THIS DRAWING IS THE PROPERTY OF AWC AND CONTAINS PROPRIETARY AND CONFIDENTIAL INFORMATION WHICH MUST NOT BE DUPLICATED, USED OR DISCLOSED OTHER THAN EXPRESSLY AUTHORIZED BY AWC.

CLIENT	CITY & BOROUGH OF WRANGELL
PROJECT	WRANGELL WTP
TITLE	SINGLE LINE DIAGRAM
SCALE	NTS
PROJECTION	
DEFAULT UNITS	MM
SHEET SIZE	17X11
SHEET	3 OF 4
DRAWING NO.	17805-EL-SLD-001-03
REV	A

AWC ELECTRICAL LINE TYPES

- PANEL WIRING BY AWC
- FIELD WIRING BY AWC
- FIELD WIRING BY AWC - DISCONNECTED FOR SHIPPING THEN REINSTALLED BY OTHERS
- WIRING DONE BY OTHERS
- COMMUNICATION WIRING BY AWC
- MECHANICAL JUMPER BAR

AWC WIRE COLOR CODE

TYPE	COLOR
3 PHASE	BLACK
120/240V AC	RED
NEUTRAL	WHITE
24V DC POSITIVE	BROWN
24V DC NEGATIVE	GRAY
DISCRETE INPUT (DC)	BLUE
DISCRETE OUTPUT (DC)	PURPLE
DISCRETE INPUT (AC)	RED
DISCRETE OUTPUT (AC)	ORANGE
GROUND/SHIELD	GREEN

AWC TERMINAL BLOCK DESCRIPTION AND COLOR CODE

TERMINAL BLOCK COLORS	DESCRIPTION
BLUE	INTRINSICALLY SAFE SIGNALS
GREEN	ANALOG SHIELDS
BEIGE	POWER AND CONTROL
GREEN/YELLOW	GROUND TERMINALS

TERMINAL BLOCK EXAMPLES

EXAMPLE: AI:#/0+

- SUFFIX
- PLC CARD CHANNEL NUMBER
- PLC CARD SLOT NUMBER
- I/O TYPE: REFER TO ABBREVIATIONS

TERMINAL SERIES	DESCRIPTION
0-99	USED FOR 208-600V AC TAGS
100-199	USED FOR 120V AC TAGS
200-299	USED FOR 120V AC UPS TAGS
300-399	USED FOR 24V DC TAGS

EXAMPLE: S-1

- TERMINAL SERIES OR EQUIPMENT NUMBER
- CATEGORY: REFER TO ABBREVIATIONS

AWC CABLE TAG DESCRIPTION

CABLE CATEGORY	DESCRIPTION
P	ELECTRICAL EQUIPMENT POWER
C	ELECTRICAL EQUIPMENT CONTROL
J	LOW VOLTAGE AND ANALOG SIGNALS
COMM	COMMUNICATION

EXAMPLE: P-VFD100-01

- CABLE SEQUENCE NUMBER
- EQUIPMENT NUMBER
- EQUIPMENT TYPE: REFER TO ABBREVIATIONS
- CABLE CATEGORY

FUTURE

ABBREVIATIONS

A	AMPERE
A/C	AIR CONDITIONER
AE	ANALYZER ELEMENT
AI	ANALOG INPUT
AIT	ANALYZER INDICATION TRANSMITTER
AO	ANALOG OUTPUT
ATS	AUTOMATIC TRANSFER SWITCH
AUX	AUXILIARY
C	CONTACTOR
CB	CIRCUIT BREAKER
CR	CONTROL RELAY
CT	CURRENT TRANSFORMER
DAF	DISSOLVED AIR FLOTATION
DI	DISCRETE INPUT
DS	DISCONNECT SWITCH
DO	DISCRETE OUTPUT
F	FUSE
FIT	FLOW INDICATION TRANSMITTER
FLA	FULL LOAD AMPS
FV	FLOW VALVE
GAD	GENERAL ARRANGEMENT DRAWING
GFCI	GROUND FAULT CIRCUIT INTERRUPTER
GND	GROUND
HE	HEATER
HP	HORSE POWER
HS	HAND SWITCH
HMI	HUMAN MACHINE INTERFACE
Hz	HERTZ
JB	JUNCTION BOX
kVA	KILOVOLT AMPERE
LCP	LOCAL CONTROL PANEL
LIT	LEVEL INDICATION TRANSMITTER
LS	LEVEL SWITCH
LSHH	LEVEL SWITCH HIGH HIGH
LSLL	LEVEL SWITCH LOW LOW
LV	LEVEL VALVE
MCB	MAIN CIRCUIT BREAKER
MCP	MOTOR CIRCUIT PROTECTOR
MCR	MASTER CONTROL RELAY
N	NEUTRAL
NET	NETWORK
NC	NORMALLY CLOSED
NO	NORMALLY OPEN
NS	NETWORK SWITCH
ORP	OXIDATION REDUCTION POTENTIAL
OIT	OPERATOR INTERFACE TERMINAL
P	PUMP
PB	PUSH BUTTON
PH	PHASE
pH	POTENTIAL HYDROGEN
PLC	PROGRAMMABLE LOGIC CONTROLLER
PM	PHASE MONITOR
POT	POTENTIOMETER
PS	POWER SUPPLY
PSH	PRESSURE SWITCH HIGH
PSL	PRESSURE SWITCH LOW
PT	PRESSURE TRANSMITTER
R	REACTOR
REC	RECEPTACLE
RCP	REMOTE CONTROL PANEL
REV	REVISION
S	SLOT
SCD	SCHEMATIC
SHLD	SHIELD
SKM	SKIMMER
SPD	SURGE PROTECTION DEVICE
SW	SWITCH
TEMP	TEMPERATURE
TURB	TURBIDITY
TS	TEMPERATURE SWITCH
TSH	TEMPERATURE SWITCH HIGH
TSL	TEMPERATURE SWITCH LOW
UPS	UNINTERRUPTIBLE POWER SUPPLY
V	VOLT
V AC	VOLTAGE ALTERNATING CURRENT
V DC	VOLTAGE DIRECT CURRENT
VFD	VARIABLE FREQUENCY DRIVE
W	WATT
WTP	WATER TREATMENT PLANT

SINGLE LINE SCHEMATIC SYMBOLS

	CIRCUIT BREAKER
	CURRENT TRANSFORMER
	CONTACTOR
	DISCONNECT SWITCH
	FUSED DISCONNECT SWITCH
	FUSE HOLDER (DISCONNECTABLE)
	GROUND
HTR	HEATER
AT / AF	MOLDED CASE CIRCUIT BREAKER
	MOTOR CIRCUIT PROTECTOR
HP	MOTOR
	REACTOR
	DUPLEX RECEPTACLE
	SIMPLEX RECEPTACLE
	FACTORY CABLE PLUG-IN OR QUICK DISCONNET
	TRANSFORMER
	WIRE SOURCE
	WIRE DESTINATION
	CORD END
	TEMPERATURE SWITCH NORMALLY OPENED
	TEMPERATURE SWITCH NORMALLY CLOSED

SINGLE LINE SCHEMATIC SYMBOLS

	TOGGLE SWITCH NORMALLY OPEN
	TOGGLE SWITCH NORMALLY CLOSED

NOTES:

ENGINEER'S SEAL

REV	DESCRIPTION	DATE	DFT	CHK	APP
A	ISSUED FOR REVIEW	23-JAN-23	RB	CW	PC

REVISIONS

9087A 198 Street Langley, BC Canada V1M 3B1
Phone : 604-936-4217
www.awcsolutions.com

THIS DRAWING IS THE PROPERTY OF AWC AND CONTAINS PROPRIETARY AND CONFIDENTIAL INFORMATION WHICH MUST NOT BE DUPLICATED, USED OR DISCLOSED OTHER THAN EXPRESSLY AUTHORIZED BY AWC.

CLIENT	CITY & BOROUGH OF WRANGELL
PROJECT	WRANGELL WTP
TITLE	SINGLE LINE DIAGRAM
SCALE	NTS
PROJECTION	
DEFAULT UNITS	MM
SHEET SIZE	17X11
SHEET	4 OF 4
DRAWING NO.	17805-EL-SLD-001-04
REV	A

MAGNETIC FLOW METER

Document No: 17805-IC-DAS-001

Client Name:	City & Borough of Wrangell	**Project No.:**	17805	9087A 198 St, Langley, BC, V1M 3B1
Project Name:	Wrangell WTP			Telephone No.: +1 (604) 936-4217

G - GENERAL					
G.1	Tag Number		02-FIT-126,226,326		
G.2	Service		DAF Train #1/#2/#3 Saturator Recycle Pump Discharge Flow Transmitter		
G.3	P&ID No.	Line / Equipment No.	17805-PR-PID-003	TW-105/205/305-SS4	
G.4	Line Size & Schedule	Line Material	2" Sch10	SS304	
G.5	Electrical Area Class	Temperature Code	General Purpose, Washdown	N/A	
G.6	Location	Ambient Temperature - °F	Field	59 - 86	
P - PROCESS					
P.1	Fluid	State	Water	Liquid	
P.2	Corrosive / Erosive	Sour Service - ppm	No	0	
P.3	Design Pressure - PSI	Design Temperature - °F	150	113	
	PROCESS CONDITIONS		@Min	@Norm	@Max
P.4	Flow Rate - GPM		58.0	80.0	80.0
P.5	Inlet Pressure - PSI (g)		85	85	105
P.6	Temperature -°F		37	50	63
P.7	Fluid Velocity - ft/s		4.6	6.6	6.6
P.8	SG @ Opr	Molecular Weight @ Opr - g/mol	1.00	18.02	
P.9	Conductivity @ Opr - uS/cm	Compressibility @ Opr	-	45.8	
P.10	DP @ Max - psi	Fluid Velocity @ Max - ft/s	0	6.6	
P.11	% Solids	Solids Type	<1	Crystalline	
P.12	Atmospheric Pressure - PSI (a)		14.25		
T - TRANSMITTER GENERAL					
T.1	Calibrated Range - GPM		0 -100		
T.2	Accuracy	Response Time	0.50%	5-200 ms	
T.3	Output Signal	Power Supply	4 to 20 mA	120 VAC	
T.4	Housing Material	Coating	Aluminum	AlSi10Mg	
T.5	Electrical Connection	Enclosure Class	1/2" NPT	General Purpose	
T.6	Local Display	Ambient Temperature Rating	Yes	-40 to 60 °F (Note 3)	
T.7	Mounting Type	Model No.	Integral	W400	
T.8	Mounting Bracket		N/A		
E - TRANSMITTER ELEMENT					
E.1	Process Connection - Size/Type/Rating		2"	Flange	150#
E.2	Body Material	Liner Material	304 SS	Polyurethane	
E.3	Electrode Type	Electrode Material	N/A	316L SS	
E.4	Design Pressure - PSI (g)	Design Temperature - °F	290	-4 to 122	
E.5	Nominal Range - GPM		4-160		
E.6	Linearity	Repeatability	N/A	0.1% of reading	
E.7	Output Signal - mA	Number of Transducers	4 - 20	N/A	
E.8	Housing Material	Coating	Aluminum	AlSi10Mg	
E.9	Electrical Connection	Enclosure Class	N/A	NEMA4X/IP66	
E.10	Upstream Diameters - mm	Downstream Diameters- mm	>500 (Note 1)	>200 (Note 1)	
E.11	Face to Face Dimensions - mm		200		
O - OPTIONS					
O.1	Flow Conditioner		N/A		
O.2	Grounding Ring	Grounding Ring Material	Yes	316	
O.3	Totalizer	Units	N/A	USG (1 Pulse/10 USG)	
O.4	Cable Type	Cable Model	N/A	N/A	
M - MANUFACTURER					
M.1	Manufacturer	Model No. (Note 3)	Endress + Hauser	5W4C50-AAELHA0DUA1K0A+AAL4Z1	
M.2	Serial Number				

N - NOTES

N.1	Follow E&H manual for acceptable upstream and downstream straight run requirements
N.2	L4 in Model No. is NSF 61
N.3	Local Display temperature rating is -4 to 140 °F. Readability may be impaired outside of this range.
N.4	

PRELIMINARY
NOT FOR CONSTRUCTION
THE INFORMATION ON THIS DRAWING IS INTENDED FOR CONCEPTUAL DEVELOPMENT, PRELIMINARY DESIGN, OR FOR GUIDANCE ONLY. THIS DOCUMENT SHOULD NOT BE CONSIDERED A FINALIZED PROFESSIONAL WORK PRODUCT.

R - REVISIONS

	Rev	Date	Rev Description	Originator	Checker	Approver
R.1	A	23 Jan 23	Issued for Review	MTB CV	MTB MTB	MSM
R.2						
R.3						

MOTOR OPERATED VALVE

	Document No:	17805-IC-DAS-002		
Client Name:	City & Borough of Wrangell	**Project No.:**	17805	9087A 198 St, Langley, BC, V1M 3B1
Project Name:	Wrangell WTP			Telephone No.: +1 (604) 936-4217

G - GENERAL					
G.1	Tag Number			02-XV-104/204/304	
G.2	Service			DAF Train #1/#2/#3 Raw Water Inlet Valve	
G.3	P&ID No.	Line / Equipment No.		17805-PR-PID-002	-
G.4	Line Size & Schedule	Line Material		10"	
G.5	Electrical Area Class	Temperature Code		General Purpose (Washdown)	N/A
G.6	Location	Ambient Temperature - °F		Field	59 - 86
P - PROCESS					
P.1	Fluid	State		Water	Liquid
P.2	Corrosive / Erosive	Sour Service - ppm		No	0
P.3	Design Pressure - PSI (g)	Design Temperature - °F		14.5	113
	Process Conditions			@Min	@Norm	@Max
P.4	Flow Rate - GPM			500.0	800.0	800.0
P.5	Inlet Pressure - PSI (g)			5	5	5
P.6	Differential Pressure - PSI (g)			-	-	-
P.7	Temperature - °F			37	50	63
P.8	Maximum Shutoff Pressure - PSI (g)			14.5		
P.9	Atmospheric Pressure - PSI (a)			14.25		
B - Valve Body					
B.1	Type			Butterfly Valve	
B.2	Body Size- in	Connection & Rating		10"	Flanged, ANSI 125/150#
B.3	Port	Face-to-Face Dimension (in)		Partial	8.00
B.4	Bonnet Type	Bonnet Material		None	N/A
B.5	Balance/ Unbalanced	Leakage Class		N/A	C504
B.6	Body Material	Connection Material		Cast Iron	Cast Iron
B.7	Ball/Plug/Disk Material	Cage Material		Ductile Iron	N/A
B.8	Seat Material	Stem Material		NBR	SS316
B.9	Seals Material	Bolting Material		NBRN	Zinc Plated Steel
B.10	Flow Direction	Gearbox Ratio		Bidirectional	N/A
B.11	Break Torque	Re-seat Torque		Proprietary	Proprietary
T - Valve Actuator					
T.1	Manufacturer	Model Number		Rotork	IQT1000FA12
T.2	Type	Size		Motor Operated (On/Off)	N/A
T.3	Power Voltage	Control Voltage		120 VAC	24 VDC
T.4	Maximum Current Draw	Power Consumption		3.9A	0.45kW
T.5	Electrical Connection Size	Handwheel		4 x M25	Yes
T.6	Enclosure Rating	Maximum Output Torque		IP66/IP68	2214 lbf.ft
C - Valve Accessories					
C.1	Position Transmitter	Manufacturer	Model	N/A	N/A
C.2		Voltage	Tag No.	N/A	N/A
C.4	Position Switches	Manufacturer	Model	Rotork	Integrated to Actuator
C.5		Voltage	Tag No. - Open/Close	24 VDC	02-XZSO-104/204/304 02-XZSC-104/204/304
C.7	Valve Limit Stop		Over-torque Protection	Yes	Yes
C.8	Local Disconnection Switch		Pushbuttons/dial	Yes	Yes
M - Manufacturer					
M.1	Manufacturer		Model No.	DeZurik	BAW, 10, F1, CI, NBRN-NBR, 150B, DI-S2
M.2	Serial Number			Note 1	
N - Notes					
N.1	Supplier to populate during time of purchasing/shipping				
N.2					
N.3					
N.4					

PRELIMINARY
NOT FOR CONSTRUCTION
THE INFORMATION ON THIS DRAWING IS INTENDED FOR CONCEPTUAL DEVELOPMENT, PRELIMINARY DESIGN, OR FOR GUIDANCE ONLY. THIS DOCUMENT SHOULD NOT BE CONSIDERED A FINALIZED PROFESSIONAL WORK PRODUCT.

R - Revisions

	Rev	Date	Rev Description	Originator	Checker	Approver
R.1	A	23 Jan 23	Issued for Review	MTB for CV	MTB MTB	MSM MSM
R.2						
R.3						

MOTOR OPERATED VALVE

	Document No:	17805-IC-DAS-003			
Client Name:	City & Borough of Wrangell		**Project No.:**	17805	9087A 198 St, Langley, BC, V1M 3B1
Project Name:	Wrangell WTP				Telephone No.: +1 (604) 936-4217

G - GENERAL					
G.1	Tag Number		03-XV-140/160/180/240/260/280		
G.2	Service		Filter #1/#2/#3/#4/#5/#6 Inlet Valve		
G.3	P&ID No.	Line / Equipment No.	17805-PR-PID-006/007	03-TK-140/160/180/240/260/280	
G.4	Line Size & Schedule	Line Material	6"	-	
G.5	Electrical Area Class	Temperature Code	General Purpose (Washdown)	N/A	
G.6	Location	Ambient Temperature - °F	Field	59 - 86	
P - PROCESS					
P.1	Fluid	State	Water	Liquid	
P.2	Corrosive / Erosive	Sour Service - ppm	No	0	
P.3	Design Pressure - PSI (g)	Design Temperature - °F	14.5	113	
	Process Conditions		@Min	@Norm	@Max
P.4	Flow Rate - GPM		250.0	314.0	314.0
P.5	Inlet Pressure - PSI (g)		1	0.8	0.5
P.6	Differential Pressure - PSI (g)		-	-	-
P.7	Temperature - °F		37	50	63
P.8	Maximum Shutoff Pressure - PSI (g)		14.5		
P.9	Atmospheric Pressure - PSI (a)		14.25		
B - Valve Body					
B.1	Type		Butterfly Valve		
B.2	Body Size- in	Connection & Rating	6"	Flanged, ANSI 125/150#	
B.3	Port	Face-to-Face Dimension (mm)	Partial	5.00	
B.4	Bonnet Type	Bonnet Material	N/A	N/A	
B.5	Balance/ Unbalanced	Leakage Class	N/A	C504	
B.6	Body Material	Connection Material	Cast Iron	Cast Iron	
B.7	Ball/Plug/Disk Material	Cage Material	Ductile Iron	N/A	
B.8	Seat Material	Stem Material	NBR	SS316	
B.9	Seals Material	Bolting Material	NBRN	Zinc Plated Steel	
B.10	Flow Direction	Gearbox Ratio	Bidirectional	N/A	
B.11	Break Torque	Re-seat Torque	Proprietary	Proprietary	
T - Valve Actuator					
T.1	Manufacturer	Model Number	Rotork	IQT500FA10	
T.2	Type	Size	Motor Operated (On/Off)	N/A	
T.3	Power Voltage	Control Voltage	120 VAC	24 VDC	
T.4	Maximum Current Draw	Power Consumption	3.7 A	0.43 kW	
T.5	Electrical Connection Size	Handwheel	4 x M25	Yes	
T.6	Enclosure Rating	Maximum Output Torque	NEMA 4X/ IP68	368.78 lbf.ft	
C - Valve Accessories					
C.1	Position Transmitter	Manufacturer	Model	N/A	N/A
C.2		Voltage	Tag No.	N/A	N/A
C.4	Position Switches	Manufacturer	Model	Rotork	Integrated to Actuator
C.5		Voltage	Tag No. - Open/Close	24 VDC	03-XSC-#40/#60/#80 (Note 2) 03-XSO-#40/#60/#80 (Note 2)
C.7	Valve Limit Stop	Over-torque Protection		Yes	Yes
C.8	Local Disconnection Switch	Pushbuttons/dial		Yes	Yes
M - Manufacturer					
M.1	Manufacturer	Model No.	DeZurik	BAW,6,F1,CI,NBRN-NBR,150B,DI-S2	
M.2	Serial Number		Note 1		
N - Notes					
N.1	Supplier to populate during time of purchasing/shipping				
N.2	# represents 1 & 2 for Filter Packages A & B respectively.				
N.3					
N.4					

PRELIMINARY
NOT FOR CONSTRUCTION
THE INFORMATION ON THIS DRAWING IS INTENDED FOR CONCEPTUAL DEVELOPMENT, PRELIMINARY DESIGN, OR FOR GUIDANCE ONLY. THIS DOCUMENT SHOULD NOT BE CONSIDERED A FINALIZED PROFESSIONAL WORK PRODUCT.

R - Revisions

	Rev	Date	Rev Description	Originator	Checker	Approver
R.1	A	23 Jan 23	Issued for Review	MTB CV	MTB MTB	msm MSM
R.2						
R.3						

MOTOR OPERATED VALVE

	Document No:	17805-IC-DAS-004		
Client Name:	City & Borough of Wrangell	**Project No.:**	17805	9087A 198 St, Langley, BC, V1M 3B1
Project Name:	Wrangell WTP			Telephone No.: +1 (604) 936-4217

G - GENERAL					
G.1	Tag Number		03-XV-142/162/182/242/262/282		
G.2	Service		Filter #1/#2/#3/#4/#5/#6 Air Scour Valve		
G.3	P&ID No.	Line / Equipment No.	17805-PR-PID-006/007	03-TK-140/160/180/240/260/280	
G.4	Line Size & Schedule	Line Material	6"	-	
G.5	Electrical Area Class	Temperature Code	General Purpose (Washdown)	N/A	
G.6	Location	Ambient Temperature - °F	Field	59 - 86	
P - PROCESS					
P.1	Fluid	State	Water	Liquid	
P.2	Corrosive / Erosive	Sour Service - ppm	No	0	
P.3	Design Pressure - PSI (g)	Design Temperature - °F	14.5	176	
	Process Conditions		@Min	@Norm	@Max
P.4	Flow Rate - SCFM		0.0	360.0	360.0
P.5	Inlet Pressure - PSI (g)		4.5	4.5	0
P.6	Differential Pressure - PSI (g)		-	-	-
P.7	Temperature - °F		0	122	122
P.8	Maximum Shutoff Pressure - PSI (g)		6.75		
P.9	Atmospheric Pressure - PSI (a)		14.25		
B - Valve Body					
B.1	Type		Butterfly Valve		
B.2	Body Size- in	Connection & Rating	6"	Flanged, ANSI 125/150#	
B.3	Port	Face-to-Face Dimension (mm)	Partial	5.00	
B.4	Bonnet Type	Bonnet Material	N/A	N/A	
B.5	Balance/ Unbalanced	Leakage Class	N/A	C504	
B.6	Body Material	Connection Material	Cast Iron	Cast Iron	
B.7	Ball/Plug/Disk Material	Cage Material	Ductile Iron	N/A	
B.8	Seat Material	Stem Material	NBR	SS316	
B.9	Seals Material	Bolting Material	NBRN	Zinc Plated Steel	
B.10	Flow Direction	Gearbox Ratio	Bidirectional	N/A	
B.11	Break Torque	Re-seat Torque	Proprietary	Proprietary	
T - Valve Actuator					
T.1	Manufacturer	Model Number	Rotork	IQT500FA10	
T.2	Type	Size	Motor Operated (On/Off)	N/A	
T.3	Power Voltage	Control Voltage	120 VAC	24 VDC	
T.4	Maximum Current Draw	Power Consumption	3.7 A	0.43 kW	
T.5	Electrical Connection Size	Handwheel	4 x M25	Yes	
T.6	Enclosure Rating	Maximum Output Torque	NEMA 4X/ IP68	368.78 lbf.ft	
C - Valve Accessories					
C.1	Position Transmitter	Manufacturer	Model	N/A	N/A
C.2		Voltage	Tag No.	N/A	N/A
C.4	Position Switches	Manufacturer	Model	Rotork	Integrated to Actuator
C.5		Voltage	Tag No. - Open/Close	24 VDC	03-XZSC-#42/#62/#82 (Note 2) 03-XZSO-#42/#62/#82 (Note 2)
C.7	Valve Limit Stop	Over-torque Protection		Yes	Yes
C.8	Local Disconnection Switch	Pushbuttons/dial		Yes	Yes
M - Manufacturer					
M.1	Manufacturer	Model No.	DeZurik	BAW,6,F1,CI,NBRN-NBR,150B,DI-S2	
M.2	Serial Number		Note 1		
N - Notes					
N.1	Supplier to populate during time of purchasing/shipping				
N.2	# represents 1 & 2 for Filter Packages A & B respectively.				
N.3					
N.4					

PRELIMINARY
NOT FOR CONSTRUCTION
THE INFORMATION ON THIS DRAWING IS INTENDED FOR CONCEPTUAL DEVELOPMENT, PRELIMINARY DESIGN, OR FOR GUIDANCE ONLY. THIS DOCUMENT SHOULD NOT BE CONSIDERED A FINALIZED PROFESSIONAL WORK PRODUCT.

R - Revisions

	Rev	Date	Rev Description	Originator	Checker	Approver
R.1	A	23 Jan 23	Issued for Review	MTBCV	MTBMTB	msmMSM
R.2						
R.3						

MOTOR OPERATED VALVE

Document No: 17805-IC-DAS-005

Client Name: City & Borough of Wrangell | **Project No.:** 17805

Project Name: Wrangell WTP

9087A 198 St, Langley, BC, V1M 3B1
Telephone No.: +1 (604) 936-4217

G - GENERAL					
G.1	Tag Number		LV-146A/166A/186A & LV-246A/266A/286A		
G.2	Service		Filter#1/#2/#3 & Filter#4/#5/#6 Effluent to Clearwell Valve		
G.3	P&ID No.	Line / Equipment No.	17805-PR-PID-006/007	-	
G.4	Line Size & Schedule	Line Material	6" Sch10	SS304	
G.5	Electrical Area Class	Temperature Code	General Purpose (Washdown)	N/A	
G.6	Location	Ambient Temperature - °F	Field	59 - 86	
P - PROCESS					
P.1	Fluid	State	Water	Liquid	
P.2	Corrosive / Erosive	Sour Service - ppm	No	0	
P.3	Design Pressure - PSI (g)	Design Temperature - °F	14.5	113	
	Process Conditions		@Min	@Norm	@Max
P.4	Flow Rate - GPM		250.0	314.0	314.0
P.5	Inlet Pressure - PSI (g)		4.3	4.3	4.3
P.6	Differential Pressure - PSI (g)		3.8	3.8	3.8
P.7	Temperature - °F		37	40	63
P.8	Maximum Shutoff Pressure - PSI (g)		4.3		
P.9	Atmospheric Pressure - PSI (a)		14.25		
B - Valve Body					
B.1	Type		Butterfly Valve		
B.2	Body Size- in	Connection & Rating	6"	Flanged, ANSI 125/150#	
B.3	Port	Face-to-Face Dimension (in)	Partial	5.00	
B.4	Bonnet Type	Bonnet Material	N/A	N/A	
B.5	Balance/ Unbalanced	Leakage Class	N/A	C504	
B.6	Body Material	Connection Material	Cast Iron	Cast Iron	
B.7	Ball/Plug/Disk Material	Cage Material	Ductile Iron	N/A	
B.8	Seat Material	Stem Material	NBR	SS316	
B.9	Seals Material	Bolting Material	NBRN	Zinc Plated Steel	
B.10	Flow Direction	Gearbox Ratio	Bidirectional	N/A	
B.11	Break Torque	Re-seat Torque	Proprietary	Proprietary	
T - Valve Actuator					
T.1	Manufacturer	Model Number	Rotork	IQT500FA10	
T.2	Type	Size	Motor Operated (Modulating)	N/A	
T.3	Power Voltage	Control Voltage	120 VAC	24 VDC	
T.4	Maximum Current Draw	Power Consumption	3.7 A	0.43 kW	
T.5	Electrical Connection Size	Handwheel	4 x M25	Yes	
T.6	Enclosure Rating	Maximum Output Torque	NEMA 4X/ IP68	368.78 lbf.ft	
C - Valve Accessories					
C.1	Position Transmitter	Manufacturer	Model	Rotork	Integrated (4-20mA)
C.2		Voltage	Tag No.	24 VDC	ZT-#46A/#66A/#86A (Note2)
C.4	Position Switches	Manufacturer	Model	NA	NA
C.5		Voltage	Tag No. - Open/Close	NA	NA
C.7	Valve Limit Stop	Over-torque Protection		Yes	Yes
C.8	Local Disconnection Switch	Pushbuttons/dial		Yes	Yes
M - Manufacturer					
M.1	Manufacturer	Model No.		DeZurik	BAW,6,F1,CI,NBRN-NBR,150B,DI-S2
M.2	Serial Number			Note 1	
N - Notes					
N.1	Supplier to populate during time of purchasing/shipping				
N.2	# represents 1 & 2 for Filter Packages A & B respectively.				
N.3					
N.4					

PRELIMINARY
NOT FOR CONSTRUCTION
THE INFORMATION ON THIS DRAWING IS INTENDED FOR CONCEPTUAL DEVELOPMENT, PRELIMINARY DESIGN, OR FOR GUIDANCE ONLY. THIS DOCUMENT SHOULD NOT BE CONSIDERED A FINALIZED PROFESSIONAL WORK PRODUCT.

R - Revisions

	Rev	Date	Rev Description	Originator	Checker	Approver
R.1	A	23 Jan 23	Issued For Review	MTB CV	MTB MTB	MSM
R.2						
R.3						

MOTOR OPERATED VALVE

	Document No:	17805-IC-DAS-006	
Client Name:	City & Borough of Wrangell	Project No.: 17805	9087A 198 St, Langley, BC, V1M 3B1
Project Name:	Wrangell WTP		Telephone No.: +1 (604) 936-4217

G - GENERAL					
G.1	Tag Number		LV-146B/166B/186B & LV-246B/266B/286B		
G.2	Service		Filter#1/#2/#3 & Filter#4/#5/#6 Rinse To Waste Valve		
G.3	P&ID No.	Line / Equipment No.	17805-PR-PID-006/007	-	
G.4	Line Size & Schedule	Line Material	6" Sch10	SS304	
G.5	Electrical Area Class	Temperature Code	General Purpose (Washdown)	N/A	
G.6	Location	Ambient Temperature - °F	Field	59 - 86	
P - PROCESS					
P.1	Fluid	State	Water	Liquid	
P.2	Corrosive / Erosive	Sour Service - ppm	No	0	
P.3	Design Pressure - PSI (g)	Design Temperature - °F	14.5	113	
	Process Conditions		@Min	@Norm	@Max
P.4	Flow Rate - GPM		250.0	314.0	314.0
P.5	Inlet Pressure - PSI (g)		4.3	4.3	4.3
P.6	Differential Pressure - PSI (g)		3.8	3.8	3.8
P.7	Temperature - °F		37	40	63
P.8	Maximum Shutoff Pressure - PSI (g)		4.3		
P.9	Atmospheric Pressure - PSI (a)		14.25		
B - Valve Body					
B.1	Type		Butterfly Valve		
B.2	Body Size- in	Connection & Rating	6"	Flanged, ANSI 125/150#	
B.3	Port	Face-to-Face Dimension (in)	Partial	5.00	
B.4	Bonnet Type	Bonnet Material	N/A	N/A	
B.5	Balance/ Unbalanced	Leakage Class	N/A	C504	
B.6	Body Material	Connection Material	Cast Iron	Cast Iron	
B.7	Ball/Plug/Disk Material	Cage Material	Ductile Iron	N/A	
B.8	Seat Material	Stem Material	NBR	SS316	
B.9	Seals Material	Bolting Material	NBRN	Zinc Plated Steel	
B.10	Flow Direction	Gearbox Ratio	Bidirectional	N/A	
B.11	Break Torque	Re-seat Torque	Proprietary	Proprietary	
T - Valve Actuator					
T.1	Manufacturer	Model Number	Rotork	IQT500FA10	
T.2	Type	Size	Motor Operated (Modulating)	N/A	
T.3	Power Voltage	Control Voltage	120 VAC	24 VDC	
T.4	Maximum Current Draw	Power Consumption	3.7 A	0.43 kW	
T.5	Electrical Connection Size	Handwheel	4 x M25	Yes	
T.6	Enclosure Rating	Maximum Output Torque	NEMA 4X/ IP68	368.78 lbf.ft	
C - Valve Accessories					
C.1	Position Transmitter	Manufacturer / Model	Rotork	Integrated (4-20mA)	
C.2		Voltage / Tag No.	24 VDC	ZT-#46B/#66B/#86B (Note2)	
C.4	Position Switches	Manufacturer / Model	NA	NA	
C.5		Voltage / Tag No. - Open/Close	NA	NA	
C.7	Valve Limit Stop	Over-torque Protection	Yes	Yes	
C.8	Local Disconnection Switch	Pushbuttons/dial	Yes	Yes	
M - Manufacturer					
M.1	Manufacturer	Model No.	DeZurik	BAW,6,F1,CI,NBRN-NBR,150B,DI-S2	
M.2	Serial Number		Note 1		
N - Notes					
N.1	Supplier to populate during time of purchasing/shipping				
N.2	# represents 1 & 2 for Filter Packages A & B respectively.				
N.3					
N.4					

PRELIMINARY
NOT FOR CONSTRUCTION
THE INFORMATION ON THIS DRAWING IS INTENDED FOR CONCEPTUAL DEVELOPMENT, PRELIMINARY DESIGN, OR FOR GUIDANCE ONLY. THIS DOCUMENT SHOULD NOT BE CONSIDERED A FINALIZED PROFESSIONAL WORK PRODUCT.

R - Revisions

	Rev	Date	Rev Description	Originator	Checker	Approver
R.1	A	23 Jan 23	Issued For Review	MTB for CV	MTB MTB	MSM
R.2						
R.3						

MOTOR OPERATED VALVE

Document No: 17805-IC-DAS-007

Client Name:	City & Borough of Wrangell	Project No.:	17805	9087A 198 St, Langley, BC, V1M 3B1
Project Name:	Wrangell WTP			Telephone No.: +1 (604) 936-4217

G - GENERAL					
G.1	Tag Number		XV-147/167/187 & XV-247/267/287		
G.2	Service		Filter#1/#2/#3 & Filter#4/#5/#6 Backwash Supply Valve		
G.3	P&ID No.	Line / Equipment No.	17805-PR-PID-006/007	-	
G.4	Line Size & Schedule	Line Material	12" Sch 10	SS4	
G.5	Electrical Area Class	Temperature Code	General Purpose (Washdown)	N/A	
G.6	Location	Ambient Temperature - °F	Field	59-86	
P - PROCESS					
P.1	Fluid	State	Water	Liquid	
P.2	Corrosive / Erosive	Sour Service - ppm	No	0	
P.3	Design Pressure - PSI (g)	Design Temperature - °F	10	113	
	Process Conditions		@Min	@Norm	@Max
P.4	Flow Rate - GPM		0.0	960.0	1,920.0
P.5	Inlet Pressure - PSI (g)		7.5	4.5	4.5
P.6	Differential Pressure - PSI (g)		3.2	0	0
P.7	Temperature - °F		37	40	63
P.8	Maximum Shutoff Pressure - PSI (g)		10 Note 3		
P.9	Atmospheric Pressure - PSI (a)		14.25		
B - Valve Body					
B.1	Type		Butterfly Valve		
B.2	Body Size- in	Connection & Rating	12	Flanged, ANSI 125/150#	
B.3	Port	Face-to-Face Dimension (in)	Partial	8	
B.4	Bonnet Type	Bonnet Material	N/A	N/A	
B.5	Balance/ Unbalanced	Leakage Class	N/A	C504	
B.6	Body Material	Connection Material	Cast Iron	Cast Iron	
B.7	Ball/Plug/Disk Material	Cage Material	Ductile Iron	N/A	
B.8	Seat Material	Stem Material	NBR	SS316	
B.9	Seals Material	Bolting Material	NBRM	Zinc Plated Steel	
B.10	Flow Direction	Gearbox Ratio	Bidirectional	N/A	
B.11	Break Torque	Re-seat Torque	Proprietary	Proprietary	
T - Valve Actuator					
T.1	Manufacturer	Model Number	Rotork	IQT1000FA12	
T.2	Type	Size	Motor Operated (ON/OFF)	N/A	
T.3	Power Voltage	Control Voltage	120 VAC	24 VDC	
T.4	Maximum Current Draw	Power Consumption	3.9 A	0.45 kW	
T.5	Electrical Connection Size	Handwheel	4 x M25	Yes	
T.6	Enclosure Rating	Maximum Output Torque	NEMA 4X/ IP68	737.5 lbf.ft	
C - Valve Accessories					
C.1	Position Transmitter	Manufacturer	Model	Rotork	N/A
C.2		Voltage	Tag No.	24 VDC	N/A
C.4	Position Switches	Manufacturer	Model	NA	N/A
C.5		Voltage	Tag No. - Open/Close	NA	03-XSC-#47/#67/#87 (Note 2) 03-XSO-#47/#67/#87
C.7	Valve Limit Stop	Over-torque Protection		Yes	Yes
C.8	Local Disconnection Switch	Pushbuttons/dial		Yes	Yes
M - Manufacturer					
M.1	Manufacturer	Model No.		DeZurik	BAW,12,F1,CI,NBRN-NBR,150B,DI-S2
M.2	Serial Number			Note 2	
N - Notes					
N.1	Supplier to populate during time of purchasing/shipping				
N.2	# represents 1 & 2 for Filter Packages A & B respectively.				
N.3	Failed upstream Pressure Regulation.				
N.4					

PRELIMINARY
NOT FOR CONSTRUCTION
THE INFORMATION ON THIS DRAWING IS INTENDED FOR CONCEPTUAL DEVELOPMENT, PRELIMINARY DESIGN, OR FOR GUIDANCE ONLY. THIS DOCUMENT SHOULD NOT BE CONSIDERED A FINALIZED PROFESSIONAL WORK PRODUCT.

R - Revisions

	Rev	Date	Rev Description	Originator	Checker	Approver
R.1	A	23 Jan 23	Issued for Review	MTBCV	MTBMTB	MSMMSM
R.2						
R.3						

MOTOR OPERATED VALVE

Document No: 17805-IC-DAS-008

Client Name:	City & Borough of Wrangell	Project No.:	17805
Project Name:	Wrangell WTP		

9087A 198 St, Langley, BC, V1M 3B1
Telephone No.: +1 (604) 936-4217

G - GENERAL					
G.1	Tag Number		02-XV-125/225/325		
G.2	Service		DAF Train #1/#2/#3 Recycle Return Valve		
G.3	P&ID No.	Line / Equipment No.	17805-PR-PID-003	TW-111/211/311-SS4	
G.4	Line Size & Schedule	Line Material	4"	SS304	
G.5	Electrical Area Class	Temperature Code	General Purpose (Washdown)	N/A	
G.6	Location	Ambient Temperature - °F	Field	59 - 86	
P - PROCESS					
P.1	Fluid	State	Water	Liquid	
P.2	Corrosive / Erosive	Sour Service - ppm	No	0	
P.3	Design Pressure - PSI (g)	Design Temperature - °F	150	113	
	Process Conditions		@Min	@Norm	@Max
P.4	Flow Rate - GPM		58.0	80.0	80.0
P.5	Inlet Pressure - PSI (g)		85	70	65
P.6	Differential Pressure - PSI (g)		-	-	-
P.7	Temperature - °F		104	115	122
P.8	Maximum Shutoff Pressure - PSI (g)		150		
P.9	Atmospheric Pressure - PSI (a)		14.25		
B - Valve Body					
B.1	Type		Butterfly Valve		
B.2	Body Size- in	Connection & Rating	4"	Flanged, ANSI 125/150#	
B.3	Port	Face-to-Face Dimension (in)	Partial	5.00	
B.4	Bonnet Type	Bonnet Material	N/A	N/A	
B.5	Balance/ Unbalanced	Leakage Class	N/A	C504	
B.6	Body Material	Connection Material	Cast Iron	Cast Iron	
B.7	Ball/Plug/Disk Material	Cage Material	Ductile Iron	N/A	
B.8	Seat Material	Stem Material	NBR	SS316	
B.9	Seals Material	Bolting Material	NBRN	Zinc Plated Steel	
B.10	Flow Direction	Gearbox Ratio	Bidirectional	N/A	
B.11	Break Torque	Re-seat Torque	Proprietary	Proprietary	
T - Valve Actuator					
T.1	Manufacturer	Model Number	Rotork	IQT250FA10	
T.2	Type	Size	Motor Operated (Modulating)	N/A	
T.3	Power Voltage	Control Voltage	120 VAC	24 VDC	
T.4	Maximum Current Draw	Power Consumption	3.7 A	0.43 kW	
T.5	Electrical Connection Size	Handwheel	4 x M25	Yes	
T.6	Enclosure Rating	Maximum Output Torque	NEMA 4X/ IP68	185 lbf.ft	
C - Valve Accessories					
C.1	Position Transmitter	Manufacturer	Model	Rotork	Integrated (4-20mA)
C.2		Voltage	Tag No.	24 VDC	ZT-125/225/325
C.4	Position Switches	Manufacturer	Model	NA	NA
C.5		Voltage	Tag No. - Open/Close	NA	NA
C.7	Valve Limit Stop	Over-torque Protection		Yes	Yes
C.8	Local Disconnection Switch	Pushbuttons/dial		Yes	Yes
M - Manufacturer					
M.1	Manufacturer	Model No.		DeZurik	BAW,4,F1,CI,NBRN-NBR,150B,DI-S2
M.2	Serial Number			Note 1	
N - Notes					
N.1	Supplier to populate during time of purchasing/shipping				
N.2					
N.3					
N.4					

PRELIMINARY NOT FOR CONSTRUCTION
THE INFORMATION ON THIS DRAWING IS INTENDED FOR CONCEPTUAL DEVELOPMENT, PRELIMINARY DESIGN, OR FOR GUIDANCE ONLY. THIS DOCUMENT SHOULD NOT BE CONSIDERED A FINALIZED PROFESSIONAL WORK PRODUCT.

R - Revisions

	Rev	Date	Rev Description	Originator	Checker	Approver
R.1	A	23 Jan 23	Issued For Review	MTB CV	MTB MTB	msm MSM
R.2						
R.3						

PRESSURE SAFETY VALVE

		Document No:	17805-IC-DAS-010		
Client Name:	City & Borough of Wrangell	Project No.:	17805	9087A 198 St, Langley, BC, V1M 3B1	
Project Name:	Wrangell WTP			Telephone No.: +1 (604) 936-4217	

G - GENERAL					
G.1	Tag Number		02-PSV-127/227/327		
G.2	Service		DAF #1/#2/#3 Saturator PSV		
G.3	P&ID No.	Line / Equipment No.	17805-PR-PID-003	02-SAT-125/225/325	
G.4	Electrical Area Class	Temperature Code	N/A	N/A	
G.5	Location	Ambient Temperature - °F	Field	59-86	
P - PROCESS					
P.1	Fluid	State	Air	Vapour	
P.2	Required Capacity - SCFM	Sour Service - ppm	16.8	0	
P.3	MW @ Relief - g/mol	Specific Gravity @ Relief	28.96	8.6 (Relative to Air)	
P.4	Compressibility Factor @ Relief	Viscosity @ Relief - cP	0.999	0.02	
P.5	Latent Heat of Vaporization @ Relief		N/A		
P.6	Operating Pressure - PSI (g)	Set Pressure - PSI (g)	65-85	150	
P.7	Operating Temperature - °F	Temperature @ Relief - °F	33-63	59-86	
P.8	Design Pressure - PSI (g)	Design Temperature - °F	150	113	
P.9	Critical Pressure - PSI (g)	Critical Temperature - °F	250	-220	
P.10	Back Pressure - Constant/ Variable/ Total - PSI (g)		0	0	0
P.11	Allowable Overpressure - PSI (g)	Ratio of Specific Heat	15	N/A	
P.12	Atmospheric Pressure - PSI (a)		14.25		
B- SIZING					
B.1	Criteria - Blocked, Fire, etc		Code Case		
B.2	Orifice Sizing		D		
B.3	Orifice Designation (ASME)		ASME		
B.4	Area Calculated (ASME) - sq. inch		N/A		
B.5	Area Selected (ASME) - sq.inch		0.121		
B.6	Rated Capacity - SCFM		350		
V - VALVE					
V.1	Type - Conventional, Bellows, Pilot Operated		Conventional		
V.2	Size Inlet	Size Outlet	1/2"	3/4"	
V.3	Connection - Inlet	Connection - Outlet	MNPT	FNPT	
V.4	Body Material	Bonnet Material	BRS B283-C48500	N/A	
V.5	Nozzle Material	Orifice Material	BRS B283-C48500	BRS B283-C48500	
V.6	Guide Material	Ring Material	SS 18-8	BRS B16	
V.7	Spring Material	Bellows Material	ASTM A-313 TY 631	N/A	
O - OPTIONS					
O.1	Cap - Screwed/ Bolted		Bolted		
O.2	Test Gauge - Yes/No		No		
M - MANUFACTURER					
M.1	Manufacturer	Model No.	Emerson	6010DCM01-KM0120	
M.2	Serial Number		Note 1		
N - NOTES					
N.1	To be completed by supplier during time of shipping				
N.2					
N.3					
N.4					

R - REVISIONS

	Rev	Date	Rev Description	Originator	Checker	Approver
R.1	A	20-Jan-23	Issued for Review	SB	MTBMTB	SDSWD
R.2						
R.3						

PRESSURE SAFETY VALVE

	Document No:	17805-IC-DAS-011			
Client Name:	City & Borough of Wrangell		Project No.:	17805	9087A 198 St, Langley, BC, V1M 3B1
Project Name:	Wrangell WTP				Telephone No.: +1 (604) 936-4217

G - GENERAL					
G.1	Tag Number		03-PSV-195		
G.2	Service		Backwash Supply PSV		
G.3	P&ID No.	Line / Equipment No.	17805-PR-PID-008	-	
G.4	Electrical Area Class	Temperature Code	General Purpose, Washdown	N/A	
G.5	Location	Ambient Temperature - °F	Field	59-86	
P - PROCESS					
P.1	Fluid	State	Water	Liquid	
P.2	Required Capacity - GPM	Sour Service - ppm	1920	0	
P.3	MW @ Relief - g/mol	Specific Gravity @ Relief	18.02	1	
P.4	Compressibility Factor @ Relief	Viscosity @ Relief - cP	-	1.3	
P.5	Latent Heat of Vaporization @ Relief		N/A		
P.6	Operating Pressure - PSI (g)	Set Pressure - PSI (g)	4.3 - 6	7.5	
P.7	Operating Temperature - °F	Temperature @ Relief - °F	37 - 63	37-63	
P.8	Design Pressure - PSI (g)	Design Temperature - °F	10	113	
P.9	Critical Pressure - PSI (a)	Critical Temperature - °F	3200	705	
P.10	Back Pressure - Constant/ Variable/ Total - PSI (g)		0	0	0
P.11	Allowable Overpressure - PSI (g)	Ratio of Specific Heat	0.75 (10%)	N/A	
P.12	Atmospheric Pressure - PSI (a)		14.25		
B- SIZING					
B.1	Criteria - Blocked, Fire, etc		Control Valve Failure		
B.2	Orifice Sizing		CV = 541 GPM (Note 4)		
B.3	Orifice Designation (ASME)		N/A		
B.4	Area Calculated (ASME) - sq. inch		N/A		
B.5	Area Selected (ASME) - sq.inch		Note 4		
B.6	Rated Capacity - GPM		4000		
V - VALVE					
V.1	Type - Conventional, Bellows, Pilot Operated		Pilot Operated - Angle Valve		
V.2	Size Inlet	Size Outlet	6"	6"	
V.3	Connection - Inlet	Connection - Outlet	RF Flanged / 150 ANSI	RF Flanged / 150 ANSI	
V.4	Body Material	Bonnet Material	Ductile Iron (Note 2)	N/A	
V.5	Nozzle Material	Orifice Material	Bronze	Buna-N® Rubber	
V.6	Guide Material	Ring Material	Bronze	N/A	
V.7	Spring Material	Bellows Material	Stainless Steel	N/A	
O - OPTIONS					
O.1	Cap - Screwed/ Bolted		Bolted		
O.2	Test Gauge - Yes/No		No		
M - MANUFACTURER					
M.1	Manufacturer	Model No.	Cla-Val	50-01 (100-01 w/ CRL-60 Pilot)	
M.2	Serial Number		By Supplier at time of Shipping		

N - NOTES

N.1	PSV is to be NSF-61 Compliant.
N.2	Main valve body to be Epoxy coated and lined.
N.3	c/w X42N-2 Filter and Needle Valve and pilot isolation valve.
N.4	To be confirmed by Supplier
N.5	

PRELIMINARY
NOT FOR CONSTRUCTION
THE INFORMATION ON THIS DRAWING IS INTENDED FOR CONCEPTUAL DEVELOPMENT, PRELIMINARY DESIGN, OR FOR GUIDANCE ONLY. THIS DOCUMENT SHOULD NOT BE CONSIDERED A FINALIZED PROFESSIONAL WORK PRODUCT.

R - REVISIONS

	Rev	Date	Rev Description	Originator	Checker	Approver
R.1	A	09 Feb 23	Issued For Review	SB	MTB MTB	SD SWD
R.2						
R.3						

SOLENOID CONTROL VALVE

Document No:	17805-IC-DAS-012		
Client Name:	City & Borough of Wrangell	**Project No.:**	17805
Project Name:	Wrangell WTP		

9087A 198 St, Langley, BC, V1M 3B1
Telephone No.: +1 (604) 936-4217

G - GENERAL					
G.1	Tag Number		02-UV-114, 02-UV-214, 02-UV-314,		
G.2	Service		DAF Train #1/#2/#3 Trough Spray Valve		
G.3	P&ID No.	Line / Equipment No.	17805-PR-PID-002	-	
G.4	Line Size & Schedule	Line Material	3/4"	SS304	
G.5	Electrical Area Class	Temperature Code	General Purpose, Washdown	N/A	
G.6	Location	Ambient Temperature - °F	Field	59 - 86	
P - PROCESS					
P.1	Fluid	State	Water	Liquid	
P.2	Corrosive/Erosive Service	Sour Service - ppm	No	0	
P.3	Design Pressure - PSI (g)	Design Temperature - °F	150	113	
	Process Conditions		@Min	@Norm	@Max
P.4	Flow Rate - GPM		0.0	5.0	7.0
P.5	Inlet Pressure - PSI(g)		40	30	30
P.6	Differential Pressure - PSI(g)		40	10	10
P.7	Vapour Pressure - PSI		NA	NA	NA
P.8	Temperature -°F		37	63	63
P.9	SG @ Opr		1	1	1
P.10	Molecular Weight - g/mol		18.01	18.01	18.01
P.11	Viscosity - cP		1	1	1
P.12	Critical Pressure - PSI(a)	Critical Temperature -°F	NA	NA	
P.13	Max Sound Level Allowed - dBA		85		
P.14	Atmospheric Pressure - PSI(a)		14.3		
V - VALVE BODY					
V.1	Type	Pattern	Hytrol 100-01 Main Valve	Globe	
V.2	Process Connection - Size/Type/Rating		3/4"	FNPT	400#
V.3	Rated Cg	Rated Cv	-	8.5	
V.4	Orifice Size - in	Orifice Material	-	-	
V.5	Body Material	Connection Material	Bronze	Bronze	
V.6	Trim Material	Disk Material	Bronze	Buna-N-Rubber	
V.7	Spring Case Material	Diaphragm Material	N/A	Nylon Reinforced Buna N Rubber	
V.8	Maximum Flow Capacity	Outlet Pressure Range - PSI(g)	42 USGPM	-	
V.9	Diff Pressure Rating - PSI(g)	Face to Face Dimension - in	200	3.5	
A - ACTUATOR					
A.1	Type - Diaphragm/Pilot		CS3 - Solenoid Control (On/Off)		
A.2	Solenoid Body	Rubber Material	Brass	Buna N Rubber	
A.3	Voltage	Inrush Current	120 VAC	0.25A	
A.4	Maximum Differential Pressure		200 psi		
O - OPTIONS					
O.1	Filter		No		
O.2	Internal Relief Valve		No		
O.3	Vent		No		
M - MANUFACTURER					
M.1	Manufacturer	Model No.	CLA-VAL	136-01	
M.2	Serial Number		N/A		
N - NOTES					
N.1			**PRELIMINARY NOT FOR CONSTRUCTION** THE INFORMATION ON THIS DRAWING IS INTENDED FOR CONCEPTUAL DEVELOPMENT, PRELIMINARY DESIGN, OR FOR GUIDANCE ONLY. THIS DOCUMENT SHOULD NOT BE CONSIDERED A FINALIZED PROFESSIONAL WORK PRODUCT.		
N.2					
N.3					
N.4					

R - REVISIONS

	Rev	Date	Rev Description	Originator	Checker	Approver
R.1	A	23 Jan 23	Issued for Review	MTB for CV	MTB MTB	msm MSM
R.2						
R.3						

SOLENOID VALVE

Document No: 17805-IC-DAS-013

Client Name:	City & Borough of Wrangell	Project No.:	17805	9087A 198 St, Langley, BC, V1M 3B1
Project Name:	Wrangell WTP			Telephone No.: +1 (604) 936-4217

G - GENERAL					
G.1	Tag Number		03-AV-145/165/185, 03-AV-245/265/285, 03-AV-345/365/385		
G.2	Service		Filter #1/#2/#3/#4/#5/#6 Effluent Turbidity Sample		
G.3	P&ID No.	Line / Equipment No.	17805-PR-PID-006/007	03-TK-140/160/180/240/260/280	
G.4	Line Size & Schedule	Line Material	1/2" Tubing	304 SS	
G.5	Electrical Area Class	Temperature Code	General Purpose, Washdown	N/A	
G.6	Location	Ambient Temperature- °F	Field	59-86	
P - PROCESS					
P.1	Fluid	State	Water	Liquid	
P.2	Corrosive / Erosive	Sour Service - ppm	No	0	
P.3	Design Pressure -PSIG	Design Temperature - °F	87	113	
	Process Conditions		@Min	@Norm	@Max
P.4	Flow Rate - USGPM		0.5	3	4.3
P.5	Inlet Pressure - PSIG		4.3	4.3	4.3
P.6	Temperature - °F		37	50	63
P.7	Maximum Shutoff Pressure - PSIG		87		
P.8	Atmospheric Pressure - PSIA		14.25		
B - VALVE BODY					
B.1	Type		Solenoid		
B.2	Body Size (Inches)	Connection & Rating	1/2"	FNPT, 150#	
B.3	Face-to-Face Dimension		2.75"		
B.4	Body Material	Bonnet Material	Brass	Brass	
B.5	Plunger/Piston Material	Seat Material	430F Stainless Steel	Nitrile or Buna-N	
B.6	Connections Material	Bolting Material	Brass	N/A	
B.7	Flow Direction	Leakage Class	Yes	Class IV	
B.8	Break Torque	Re-seat Torque	N/A	N/A	
T - VALVE ACTUATOR					
T.1	Manufacturer	Model Number	ASCO	-	
T.2	Type	Size	2 position 1 way	1/2"	
T.3	Power Voltage	Maximum Current Draw	120 VAC	0.58 A	
T.4	Electrical Connection Size	Fail Position	DIN 43650	Fail Close	
T.5	Enclosure Rating		NEMA 4X		
C - VALVE ACCESSORIES					
C.1	Local Disconnection Switch	Pushbuttons/dial	No	Note 2	
M - MANUFACTURER					
M.1	Manufacturer	Model No.	ASCO	SC8210G094MO-120VAC 60Hz	
M.2	Serial Number		Note 1		

N - NOTES

N.1	Supplier to populate during time of shipping
N.2	Manual Override to be provided
N.3	Outlet to waste, NSF-61 compliance is not required.
N.4	Optimal flow rate to be set to 0.013- 0.021 GPM by adjusting needle valve.
N.5	Vendor to provide Stainless steel tag with SS fasteners.
N.6	

PRELIMINARY
NOT FOR CONSTRUCTION
THE INFORMATION ON THIS DRAWING IS INTENDED FOR CONCEPTUAL DEVELOPMENT, PRELIMINARY DESIGN, OR FOR GUIDANCE ONLY. THIS DOCUMENT SHOULD NOT BE CONSIDERED A FINALIZED PROFESSIONAL WORK PRODUCT.

R - REVISIONS

	Rev	Date	Rev Description	Originator	Checker	Approver
R.1	A	23 Jan 23	Issued for Review	MTB CV	MTB MTB	MSM MSM
R.2						
R.3						

LEVEL TRANSMITTER

Document No: 17805-IC-DAS-014

Client Name:	City & Borough of Wrangell	**Project No.:** 17805	9087A 198 St, Langley, BC, V1M 3B1
Project Name:	Wrangell WTP		Telephone No.: +1 (604) 936-4217

G - GENERAL						
G.1	Tag Number			01-LIT-020		
G.2	Service			Rapid Mix Tank Level Transmitter		
G.3	P&ID No.	Line / Equipment No.		17805-PR-PID-001	01-TK-020	
G.4	Line Size & Schedule	Line Material		N/A	N/A	
G.5	Electrical Area Class	Temperature Code		General Purpose, Washdown	N/A	
G.6	Location	Ambient Temperature - °F		Field	59-86	
P - PROCESS						
P.1	Fluid	State		Water	Liquid	
P.2	Corrosive / Erosive	Sour Service		No	No	
P.3	Design Pressure - psi(g)	Design Temperature - °F		Atmospheric	60	
	Process Conditions			@Min	@Norm	@Max
P.4	Pressure - psi(g)			Atmospheric	Atmospheric	Atmospheric
P.5	Temperature -°F			-	-	-
P.6	SG @ Operating	Dielectric Constant		1		
P.7	Viscosity @ Operating - cP	Application - Level/interface/both		1.2 - 1.6	Level	
P.8	Condition - Calm/ Turbulence/ Agitation/ Bubbling/ Fill Splashing			Agitation		
P.9	Upper Layer	Media	Dielectric Constant	N/A	N/A	
P.10		Specific Gravity	Viscosity - cP	N/A	N/A	
P.11	Lower Layer	Media	Dielectric Constant	N/A	N/A	
P.12		Specific Gravity	Viscosity - cP	N/A	N/A	
C - PROCESS CONNECTION						
C.1	Stilling Well/Chamber Type			N/A		
C.2	Stilling Well:	Length - ft	Material / Schedule	N/A	N/A	N/A
C.3	Process Connection - Size/Type/Rating			1 1/2"	NPT	N/A
V - VESSEL/ TANK						
V.1	Type - Open/Closed	Shape - Square/Spherical, etc.		Open	Rectangular	
V.2	Material	Positioning - Horizontal/Vertical		Aluminum	Vertical	
V.3	Bottom - Flat/Dome/Cone/etc.	Total Height - ft		Flat	6 (TBC)	
V.4	Diameter - in	Nozzle distance to Wall - in		N/A	TBD (min 7.87 in)	
V.5	Mixer/Agitator - Yes/No	Heating Coil - Yes/No		Yes	No	
A - PROBE/ ANTENNA						
A.1	Material	Process Seal		PVDF	FKM	
A.2	Design Pressure - psi(g)	Design Temperature - °F		-14.5 to 43.5	-40 to +176	
T - TRANSMITTER GENERAL						
T.1	Type			Radar - Open Path		
T.2	Measurement (calibrated) Range - ft			0-6 (TBC), (0-100%)		
T.3	Instrument Range - ft			up to 32.81 ft (Recommended)		
T.4	Accuracy	Response Time		+/- 0.079 in (2 mm)	<250 ms	
T.5	Output Signal	Power Supply		4-20 mA HART	12-35VDC (Loop)	
T.6	Failure mode	Housing Material		<3.6 mA	Plastic PBT	
T.7	Electrical Connection	Enclosure Class		1/2" NPT	IP66/IP67	
T.8	Local Display	Ambient Temperature Rating-°F		Yes	-40 to +158	
M - Manufacturer						
M.1	Manufacturer	Model No.		VEGA	VEGAPULS PS31.XXXXXNQHB	
M.2	Serial Number			N/A		
N - Notes						
N.1	Comes standard with Bluetooth connectivity					
N.2						
N.3						
N.4						

PRELIMINARY
NOT FOR CONSTRUCTION
THE INFORMATION ON THIS DRAWING IS INTENDED FOR CONCEPTUAL DEVELOPMENT, PRELIMINARY DESIGN, OR FOR GUIDANCE ONLY. THIS DOCUMENT SHOULD NOT BE CONSIDERED A FINALIZED PROFESSIONAL WORK PRODUCT.

R - Revisions

	Rev	Date	Rev Description	Originator	Checker	Approver
R.1	A	23 Jan 23	Issued for Review	CV	MTB	MSM
R.2	B	13 Feb 23	Issued for Review	MTB MTB	CV CV	MSM
R.3						

LEVEL TRANSMITTER

Document No:	17805-IC-DAS-015		
Client Name:	City & Borough of Wrangell	**Project No.:** 17805	9087A 198 St, Langley, BC, V1M 3B1
Project Name:	Wrangell WTP		Telephone No.: +1 (604) 936-4217

G - GENERAL						
G.1	Tag Number			02-LIT-119/219/319		
G.2	Service			DAF Train #1/#2/#3 Break Tank Level Transmitter		
G.3	P&ID No.	Line / Equipment No.		17805-PR-PID-002	01-TK-119/219/319	
G.4	Line Size & Schedule	Line Material		N/A	N/A	
G.5	Electrical Area Class	Temperature Code		General Purpose, Washdown	N/A	
G.6	Location	Ambient Temperature - °F		Field	59 - 86	
P - PROCESS						
P.1	Fluid	State		Water	Liquid	
P.2	Corrosive / Erosive	Sour Service		No	No	
P.3	Design Pressure - psi(g)	Design Temperature - °F		Atmospheric	60	
	Process Conditions			@Min	@Norm	@Max
P.4	Pressure - psi(g)			Atmospheric	Atmospheric	Atmospheric
P.5	Temperature -°F			-	-	-
P.6	SG @ Operating	Dielectric Constant		1		
P.7	Viscosity @ Operating - cP	Application - Level/interface/both		1.2-1.6	Level	
P.8	Condition - Calm/ Turbulence/ Agitation/ Bubbling/ Fill Splashing			Bubbling		
P.9	Upper Layer	Media	Dielectric Constant	N/A	N/A	
P.10		Specific Gravity	Viscosity - cP	N/A	N/A	
P.11	Lower Layer	Media	Dielectric Constant	N/A	N/A	
P.12		Specific Gravity	Viscosity - cP	N/A	N/A	
C - PROCESS CONNECTION						
C.1	Stilling Well/Chamber Type			N/A		
C.2	Stilling Well:	Length - ft	Material / Schedule	N/A	N/A	N/A
C.3	Process Connection - Size/Type/Rating			1 1/2"	NPT	N/A
V - VESSEL/ TANK						
V.1	Type - Open/Closed	Shape - Square/Spherical, etc.		Open	Rectangular	
V.2	Material	Positioning - Horizontal/Vertical		Aluminum	Vertical	
V.3	Bottom - Flat/Dome/Cone/etc.	Total Height - ft		Flat	12' (TBC)	
V.4	Diameter - in	Nozzle distance to Wall - in		N/A	TBD (min 7.87 in)	
V.5	Mixer/Agitator - Yes/No	Heating Coil - Yes/No		No	No	
A - PROBE/ ANTENNA						
A.1	Material	Process Seal		PVDF	FKM	
A.2	Design Pressure - psi(g)	Design Temperature - °F		-14.5 to 43.5	-40 to +176	
T - TRANSMITTER GENERAL						
T.1	Type			Radar - Open Path		
T.2	Measurement (calibrated) Range - ft			0-12 (TBC), (0-100%)		
T.3	Instrument Range - ft			up to 32.81 ft (Recommended)		
T.4	Accuracy	Response Time		+/- 0.079 in (2 mm)	<250 ms	
T.5	Output Signal	Power Supply		4-20 mA HART	12-35VDC (Loop)	
T.6	Failure mode	Housing Material		<3.6 mA	Plastic PBT	
T.7	Electrical Connection	Enclosure Class		1/2" NPT	IP66/IP67	
T.8	Local Display	Ambient Temperature Rating-°F		Yes	-40 to +158	
M - Manufacturer						
M.1	Manufacturer	Model No.		VEGA	VEGAPULS PS31.XXXXXNQHB	
M.2	Serial Number			N/A		
N - Notes						
N.1	Comes standard with Bluetooth connectivity					
N.2						
N.3						
N.4						

PRELIMINARY
NOT FOR CONSTRUCTION
THE INFORMATION ON THIS DRAWING IS INTENDED FOR CONCEPTUAL DEVELOPMENT, PRELIMINARY DESIGN, OR FOR GUIDANCE ONLY. THIS DOCUMENT SHOULD NOT BE CONSIDERED A FINALIZED PROFESSIONAL WORK PRODUCT.

R - Revisions

	Rev	Date	Rev Description	Originator	Checker	Approver
R.1	A	23 Jan 23	Issued for Review	CV	MTB	MSM
R.2	B	13 Feb 23	Issued for Review	MTB MTB	CV CV	MSM
R.3						

LEVEL TRANSMITTER

Document No: 17805-IC-DAS-016

Client Name:	City & Borough of Wrangell	**Project No.:**	17805	9087A 198 St, Langley, BC, V1M 3B1
Project Name:	Wrangell WTP			Telephone No.: +1 (604) 936-4217

G - GENERAL					
G.1	Tag Number		02-LIT-128/228/328		
G.2	Service		Saturator Level		
G.3	P&ID No.	Line / Equipment No.	17805-PR-PID-003	02-SAT-125/225/325	
G.4	Line Size & Schedule	Line Material	1/2" Tubing	316 SS	
G.5	Electrical Area Class	Temperature Code	General Purpose (washdown)	N/A	
G.6	Location	Ambient Temperature- °F	Field	59-86	
P - PROCESS					
P.1	Fluid	State	Air/Water	Liquid/Gas	
P.2	Corrosive / Erosive	Sour Service - ppm	N/A	0	
P.3	Design Pressure - psi(g)	Design Temperature - °F	150	113	
	Process Conditions		@Min	@Norm	@Max
P.4	Pressure - psi(g)		65	65	120
P.5	Temperature -°F		37	50	63
P.6	SG @ Operating		1		
P.7	Molecular Weight @ Operating - g/mol		18.02		
P.8	Viscosity @ Operating - cP		1.2		
P.9	Pulsating Service - Yes/ No		No		
P.10	Fouling Service - Yes/No		No		
P.11	Atmospheric Pressure - psi(a)		14.25		
T - TRANSMITTER GENERAL					
T.1	Type		Differential Pressure Transmitter		
T.2	Calibrated Span		0 - 0.87 psi (0-24 inH2O) - (Note 1)		
T.3	Instrument Range - in(H2O		0 - 7.5 psi (0-207 inH2O)		
T.4	Process Connection - Size/Type/Rating		1/4"	NPT	150#
T.5	Accuracy	Response Time	±0.1 % of span	T90=195 ms	
T.6	Output Signal	Power Supply	4-20 mA	24 VDC (Loop Powered)	
T.7	Housing Material	Body Material	F30 Aluminum	Aluminum	
T.8	Element Material	Seal Material	SS 316 L	FKM Viton	
T.9	Electrical Connection	Enclosure Class	1/2" NPT	NEMA 4X/6P	
T.10	Pressure Rating- psi(g)	Temperature Rating - Min/Max	1015	-4 to 185 °F	
T.11	Local Display	Ambient Temperature Rating	Yes	-40 to 185 °F	
T.12	Burnout Direction	Fill Material	High	Piezoresistive Silicone Oil	
F - MANIFOLD					
F.1	Manifold Type & Size	Manifold Material	3 VALVE	316L	
F.2	Manifold Manufacturer	Manifold Model Number	E&H	DA63M	
F.3	Mounting Bracket		Yes		
O - OPTIONS					
O.1	Remote Display - Yes/No		No		
M - MANUFACTURER					
M.1	Manufacturer	Model No.	Endress + Hauser	PMD55B-FA21BD67FGDHNJA1A+ AAN3PBZ1+LR	
M.2	Serial Number		Supplier to Provide at shipping		
N - NOTES					
N.1	Calibrated Range and Zero Suppression to be verified at site.				
N.2					
N.3					
N.4					

PRELIMINARY NOT FOR CONSTRUCTION

THE INFORMATION ON THIS DRAWING IS INTENDED FOR CONCEPTUAL DEVELOPMENT, PRELIMINARY DESIGN, OR FOR GUIDANCE ONLY. THIS DOCUMENT SHOULD NOT BE CONSIDERED A FINALIZED PROFESSIONAL WORK PRODUCT.

R - REVISIONS

	Rev	Date	Rev Description	Originator	Checker	Approver
R.1	A	23 Jan 23	Issued for Review	MTB CV	MTB MTB	MSM MSM
R.2						
R.3						

LEVEL GAUGE GLASS

	Document No:	17805-IC-DAS-017			
Client Name:	City & Borough of Wrangell		Project No.:	17805	9087A 198 St, Langley, BC, V1M 3B1
Project Name:	Wrangell WTP				Telephone No.: +1 (604) 936-4217

G - GENERAL						
G.1	Tag Number			02-LI-129/229/329		
G.2	Service			Saturator Level		
G.3	P&ID No.	Equipment No.		17805-PR-PID-003	02-SAT-125/225/325	
G.4	Line Size & Schedule	Line Material		N/A	N/A	
G.5	Electrical Area Class	Temperature Code		General Purpose, Washdown	N/A	
G.6	Location	Ambient Temperature- °F		Field	59-86	
P - PROCESS						
P.1	Fluid	State		Air Saturated Water	Liquid	
P.2	Corrosive / Erosive	Sour Service - ppm		N/A	0	
P.3	Design Pressure - psi(g)	Design Temperature - °F		150	113	
	PROCESS CONDITIONS			@MIN	@NORM	@MAX
P.4	Pressure - psi(g)			65	65	120
P.5	Temperature -°F			37	50	63
P.5	Level - inches			TBC Note 1	TBC Note 1	TBC Note 1
P.6	SG @ Operating	Dielectric Constant		1	80	
P.7	Viscosity @ Operating - cP	Application - level/ interface/ both		1.2	Level	
P.8	Liquid/Slurry	Foam Type - if any		Liquid	N/A	
P.9	Condition - Calm/ Turbulence/ Agitation/ Bubbling/ Fill Splashing			Bubbling		
P.10	Upper Layer	Media	Dielectric Constant	Air	-	
P.11		Specific Gravity	Viscosity - cP	-	-	
P.12	Lower Layer	Media	Dielectric Constant	Air Saturated Water	-	
P.13		Specific Gravity	Viscosity - cP	-	-	
B - GAUGE BODY						
B.1	Type			Gauge Glass		
B.2	Material			Borosilicate Model (glass), 316 SS (wetted), 304 SS (non-wetted)		
B.3	Rating - psi(g)			280		
B.4	Connection Type	Connection Rating- psi(g)		1/2" NPT	150	
B.5	Center to Center Length - in	Visible Length -in		12 (TBC)	8.3 (TBC)	
B.6	Number of Sections			1		
C -GAUGE COCKS						
B.1	Type			Standard with Ball Checks		
B.2	Body Material			316 LSS		
B.3	Rating - psi(g)			280		
B.4	Mounting	Handle/Handwheel		1/2" MNPT	Handwheel	
B.5	Vessel Connection	Type	Size	MNPT	1/2"	
B.6	Gauge Connection	Type	Size	Stuffing Box	5/8"	
B.7	Drain/Vent Connection	Type	Size	FNPT (Plugged)	1/4"	
O - OPTIONS						
O.1	Explosion Proof Illuminators			No		
O.2	Mica Shield for Glass - Yes/No			No (Lexan shield)		
O.3	Heating - Internal/ External/ N/A			N/A		
O.4	Guard Rods			Yes (4 Guard Rods)		
M - MANUFACTURER						
M.1	Manufacturer	Model No.		John C. Ernst Co., Inc.	441-04-12CC-505-VIT-839A	
M.2	Serial Number			N/A		
N - NOTES						
N.1	TBC from the saturator general assembly drawing					
N.2						
N.3						
N.4						

PRELIMINARY
NOT FOR CONSTRUCTION
THE INFORMATION ON THIS DRAWING IS INTENDED FOR CONCEPTUAL DEVELOPMENT, PRELIMINARY DESIGN, OR FOR GUIDANCE ONLY. THIS DOCUMENT SHOULD NOT BE CONSIDERED A FINALIZED PROFESSIONAL WORK PRODUCT.

R - REVISIONS

	Rev	Date	Rev Description	Originator	Checker	Approver
R.1	A	23 Jan 23	Issued for Review	MTB CV	MTB MTB	MSM
R.2						
R.3						

LEVEL TRANSMITTER

	Document No:	17805-IC-DAS-018		
Client Name:	City & Borough of Wrangell	**Project No.:**	17805	9087A 198 St, Langley, BC, V1M 3B1
Project Name:	Wrangell WTP			Telephone No.: +1 (604) 936-4217

G - GENERAL						
G.1	Tag Number			03-LIT-141/161/181/241/261/281		
G.2	Service			Filter Tank #1/#2/#3/#4/#5/#6 Level Transmitter		
G.3	P&ID No.	Line / Equipment No.		17805-PR-PID-006/007	03-TK-140/160/180/240/260/280	
G.4	Line Size & Schedule	Line Material		N/A	N/A	
G.5	Electrical Area Class	Temperature Code		General Purpose, Washdown	N/A	
G.6	Location	Ambient Temperature - °F		Field	59-86	
P - PROCESS						
P.1	Fluid	State		Water	Liquid	
P.2	Corrosive / Erosive	Sour Service		No	No	
P.3	Design Pressure - psi(g)	Design Temperature - °F		Atmospheric	60	
	Process Conditions			@Min	@Norm	@Max
P.4	Pressure - psi(g)			Atmospheric	Atmospheric	Atmospheric
P.5	Temperature -°F			-	-	-
P.6	SG @ Operating	Dielectric Constant		1		
P.7	Viscosity @ Operating - cP	Application - Level/interface/both		1.2-1.6	Level	
P.8	Condition - Calm/ Turbulence/ Agitation/ Bubbling/ Fill Splashing			Calm		
P.9	Upper Layer	Media	Dielectric Constant	N/A	N/A	
P.10		Specific Gravity	Viscosity - cP	N/A	N/A	
P.11	Lower Layer	Media	Dielectric Constant	N/A	N/A	
P.12		Specific Gravity	Viscosity - cP	N/A	N/A	
C - PROCESS CONNECTION						
C.1	Stilling Well/Chamber Type			N/A		
C.2	Stilling Well:	Length - ft	Material / Schedule	N/A	N/A	N/A
C.3	Process Connection - Size/Type/Rating			1 1/2"	NPT	N/A
V - VESSEL/ TANK						
V.1	Type - Open/Closed	Shape - Square/Spherical, etc.		Open	Rectangular	
V.2	Material	Positioning - Horizontal/Vertical		Aluminum	Vertical	
V.3	Bottom - Flat/Dome/Cone/etc.	Total Height - ft		Flat	10.5 (TBC)	
V.4	Diameter - in	Nozzle distance to Wall - in		N/A	TBD (min 7.87 in)	
V.5	Mixer/Agitator - Yes/No	Heating Coil - Yes/No		No	No	
A - PROBE/ ANTENNA						
A.1	Material	Process Seal		PVDF	FKM	
A.2	Design Pressure - psi(g)	Design Temperature - °F		-14.5 to 43.5	-40 to +176	
T - TRANSMITTER GENERAL						
T.1	Type			Radar - Open Path		
T.2	Measurement (calibrated) Range - ft			0 - 10.5 (TBC), (0-100%)		
T.3	Instrument Range - ft			up to 32.81 ft (Recommended)		
T.4	Accuracy	Response Time		+/- 0.079 in (2 mm)	<250 ms	
T.5	Output Signal	Power Supply		4-20 mA HART	12-35VDC (Loop)	
T.6	Failure mode	Housing Material		<3.6 mA	Plastic PBT	
T.7	Electrical Connection	Enclosure Class		1/2" NPT	IP66/IP67	
T.8	Local Display	Ambient Temperature Rating-°F		Yes	-40 to +158	
M - Manufacturer						
M.1	Manufacturer	Model No.		VEGA	VEGAPULS PS31.XXXXXNQHB	
M.2	Serial Number			N/A		
N - Notes						
N.1	Comes standard with Bluetooth connectivity					
N.2						
N.3						
N.4						

PRELIMINARY
NOT FOR CONSTRUCTION
THE INFORMATION ON THIS DRAWING IS INTENDED FOR CONCEPTUAL DEVELOPMENT, PRELIMINARY DESIGN, OR FOR GUIDANCE ONLY. THIS DOCUMENT SHOULD NOT BE CONSIDERED A FINALIZED PROFESSIONAL WORK PRODUCT.

R - Revisions

	Rev	Date	Rev Description	Originator	Checker	Approver
R.1	A	23 Jan 23	Issued for Review	CV	MTB	MSM
R.2	B	13 Feb 23	Issued for Review	MTB MTB	CV CV	MSM MSM
R.3						

PRESSURE GAUGE

	Document No:	17805-IC-DAS-019	
Client Name:	City & Borough of Wrangell	Project No.: 17805	9087A 198 St, Langley, BC, V1M 3B1
Project Name:	Wrangell WTP		Telephone No.: +1 (604) 936-4217

G - GENERAL					
G.1	Tag Number		02-PI-121/221/321		
G.2	Service		DAF Train #1/#2/#3 Saturator Recycle Pump Suction Pressure		
G.3	P&ID No.	Line / Equipment No.	17805-PR-PID-003	TW-101/201/301	
G.4	Line Size & Schedule	Line Material	4"	SS4	
G.5	Electrical Area Class	Temperature Code	General Purpose, Washdown	N/A	
G.6	Location	Ambient Temperature - °F	Field	59-86	
P - PROCESS					
P.1	Fluid	State	Water	Liquid	
P.2	Corrosive / Erosive	Sour Service - ppm	N/A	0	
P.3	Design Pressure - psi(g)	Design Temperature - °F	45	113	
	Process Conditions		@Min	@Norm	@Max
P.4	Pressure - psi(g)		5	5	5
P.5	Temperature -°F		37.0	50	63
P.6	SG @ Operating		1		
P.7	Molecular Weight @ Operating - g/mol		18.02		
P.8	Viscosity @ Operating - cP		1.2		
P.9	Pulsating Service (Yes/ No)		No		
P.10	Fouling Service (Yes/No)		No		
P.11	Atmospheric Pressure - psi(a)		14.3		
T - GAUGE GENERAL					
T.1	Type		Bourdon Tube		
T.2	Instrument Range - psi(g)		-30 in HG to 15 psi		
T.3	Process Location (Bottom, Top, Back)		Bottom		
T.4	Process Connection - Size/Type/Rating		1/2"	NPT	150#
T.5	Accuracy	Increments	+/- 2 1/2 % of span	N/A	
T.6	Blowout Protection (Yes/No)	Blowout Location	Yes	Back	
T.7	Element Material	Movement Material	Lead Free Copper	Copper Alloy	
T.8	Case Material	Window Material	SS304	Polycarbonate w/ Buna-N gasket	
T.9	Ring Material	Zero Adjustment (Yes/No)	SS304	No	
T.10	Dial Size	Dial Color	2 1/2"	White	
T.11	Fill Fluid (Y/N)	Fill Fluid Material	Yes	Glycerine 99.7%	
T.12	Pressure Rating PSIG	Temperature Rating (Min/Max)	150	-4 to 140 [°F]	
F - MANIFOLD					
F.1	Manifold Type & Size	Manifold Material	N/A	N/A	
F.2	Manifold Manufacturer	Manifold Model Number	N/A	N/A	
F.3	Mounting Bracket		N/A		
O - OPTIONS					
O.1	Siphon (Mfr/Model)	Siphon Material	N/A	N/A	
M - MANUFACTURER					
M.1	Manufacturer	Model No.	Wika	213.53DW	
M.2	Serial Number		N/A		
N - NOTES					
N.1	Vendor to provide stainless steel tags with stainless steel wire fasteners.				
N.2	Need to be NSF61 Compliant				
N.3					
N.4					

PRELIMINARY NOT FOR CONSTRUCTION
THE INFORMATION ON THIS DRAWING IS INTENDED FOR CONCEPTUAL DEVELOPMENT, PRELIMINARY DESIGN, OR FOR GUIDANCE ONLY. THIS DOCUMENT SHOULD NOT BE CONSIDERED A FINALIZED PROFESSIONAL WORK PRODUCT.

R - REVISIONS

	Rev	Date	Rev Description	Originator	Checker	Approver
R.1	A	23 Jan 23	Issued for Review	MTB CV	MTB MTB	MSM MSM
R.2						
R.3						

PRESSURE GAUGE

Document No:	17805-IC-DAS-020		
Client Name:	City & Borough of Wrangell	**Project No.:** 17805	9087A 198 St, Langley, BC, V1M 3B1
Project Name:	Wrangell WTP		Telephone No.: +1 (604) 936-4217

G - GENERAL					
G.1	Tag Number		02-PI-123, 02-PI-223, 02-PI-323		
G.2	Service		DAF Train #1/#2/#3 Saturator Recycle Pump Discharge Pressure		
G.3	P&ID No.	Line / Equipment No.	17805-PR-PID-003	TW-101/201/301	
G.4	Line Size & Schedule	Line Material	3"	SS4	
G.5	Electrical Area Class	Temperature Code	General Purpose, Washdown	N/A	
G.6	Location	Ambient Temperature - °F	Field	59 - 86	
P - PROCESS					
P.1	Fluid	State	Water	Liquid	
P.2	Corrosive / Erosive	Sour Service - ppm	N/A	0	
P.3	Design Pressure - PSIG	Design Temperature - °F	150	113	
	Process Conditions		@Min	@Norm	@Max
P.4	Pressure - PSIG		85	90	110
P.5	Temperature -°F		37	50	63
P.6	SG @ Opr		1		
P.7	Molecular Weight @ Opr - g/mol		18.05		
P.8	Viscosity @ Opr - cP		1.4		
P.9	Pulsating Service (Yes/ No)		No		
P.10	Fouling Service (Yes/No)		No		
P.11	Atmospheric Pressure - PSIA		14.3		
T - GAUGE GENERAL					
T.1	Type		Bourdon Tube		
T.2	Instrument Range - psi(g)		0-150		
T.3	Process Location (Bottom, Top, Back)		Bottom		
T.4	Process Connection - Size/Type/Rating		1/2"	NPT	150#
T.5	Accuracy	Increments	+/- 2 1/2 % of span	N/A	
T.6	Blowout Protection (Yes/No)	Blowout Location	Yes	Back	
T.7	Element Material	Movement Material	Lead Free Copper	Copper Alloy	
T.8	Case Material	Window Material	SS304	Polycarbonate w/ Buna-N gasket	
T.9	Ring Material	Zero Adjustment (Yes/No)	SS304	No	
T.10	Dial Size	Dial Color	2 1/2"	White	
T.11	Fill Fluid (Y/N)	Fill Fluid Material	Yes	Glycerine 99.7%	
T.12	Pressure Rating PSIG	Temperature Rating (Min/Max)	150	-4 to 140 [°F]	
F - MANIFOLD					
F.1	Manifold Type & Size	Manifold Material	N/A	N/A	
F.2	Manifold Manufacturer	Manifold Model Number	N/A	N/A	
F.3	Mounting Bracket		N/A		
O - OPTIONS					
O.1	Siphon (Mfr/Model)	Siphon Material	N/A	N/A	
M - MANUFACTURER					
M.1	Manufacturer	Model No.	Wika	213.53DW	
M.2	Serial Number		N/A		
N - NOTES					
N.1	Vendor to provide stainless steel tags with stainless steel wire fasteners.				
N.2	Need to be NSF61 Compliant				
N.3					
N.4					

PRELIMINARY
NOT FOR CONSTRUCTION
THE INFORMATION ON THIS DRAWING IS INTENDED FOR CONCEPTUAL DEVELOPMENT, PRELIMINARY DESIGN, OR FOR GUIDANCE ONLY. THIS DOCUMENT SHOULD NOT BE CONSIDERED A FINALIZED PROFESSIONAL WORK PRODUCT.

R - REVISIONS

	Rev	Date	Rev Description	Originator	Checker	Approver
R.1	A	23 Jan 23	Issued for Review	MTBCV	MTBMTB	MSMMSM
R.2						
R.3						

PRESSURE GAUGE

	Document No:	17805-IC-DAS-021		
Client Name:	City & Borough of Wrangell	**Project No.:**	17805	9087A 198 St, Langley, BC, V1M 3B1
Project Name:	Wrangell WTP			Telephone No.: +1 (604) 936-4217

G - GENERAL					
G.1	Tag Number		02-PI-130, 02-PI-230, 02-PI-330		
G.2	Service		DAF Train #1/#2/#3 Saturator Pressure Gauge		
G.3	P&ID No.	Line / Equipment No.	17805-PR-PID-003	02-SAT-125/225/325	
G.4	Line Size & Schedule	Line Material	1/2"	-	
G.5	Electrical Area Class	Temperature Code	General Purpose, Washdown	N/A	
G.6	Location	Ambient Temperature - °F	Field	59-86	
P - PROCESS					
P.1	Fluid	State	Water	Liquid	
P.2	Corrosive / Erosive	Sour Service - ppm	N/A	0	
P.3	Design Pressure - PSIG	Design Temperature - °F	150	113	
	Process Conditions		@Min	@Norm	@Max
P.4	Pressure - PSIG		65	85	105
P.5	Temperature -°F		37.0	50	63
P.6	SG @ Opr		1		
P.7	Molecular Weight @ Opr - g/mol		18.05		
P.8	Viscosity @ Opr - cP		1.4		
P.9	Pulsating Service (Yes/ No)		No		
P.10	Fouling Service (Yes/No)		No		
P.11	Atmospheric Pressure - PSIA		14.25		
T - GAUGE GENERAL					
T.1	Type		Bourdon Tube		
T.2	Instrument Range - psi(g)		0-150		
T.3	Process Location (Bottom, Top, Back)		Bottom		
T.4	Process Connection - Size/Type/Rating		1/2"	NPT	150#
T.5	Accuracy	Increments	+/- 2 1/2 % of span	N/A	
T.6	Blowout Protection (Yes/No)	Blowout Location	Yes	Back	
T.7	Element Material	Movement Material	Lead Free Copper	Copper Alloy	
T.8	Case Material	Window Material	SS304	Polycarbonate w/ Buna-N gasket	
T.9	Ring Material	Zero Adjustment (Yes/No)	SS304	No	
T.10	Dial Size	Dial Color	2 1/2"	White	
T.11	Fill Fluid (Y/N)	Fill Fluid Material	Yes	Glycerine 99.7%	
T.12	Pressure Rating PSIG	Temperature Rating (Min/Max)	150	-4 to 140 [°F]	
F - MANIFOLD					
F.1	Manifold Type & Size	Manifold Material	N/A	N/A	
F.2	Manifold Manufacturer	Manifold Model Number	N/A	N/A	
F.3	Mounting Bracket		N/A		
O - OPTIONS					
O.1	Siphon (Mfr/Model)	Siphon Material	N/A	N/A	
M - MANUFACTURER					
M.1	Manufacturer	Model No.	Wika	213.53DW	
M.2	Serial Number		N/A		
N - NOTES					
N.1	Vendor to provide stainless steel tags with stainless steel wire fasteners.				
N.2	Need to be NSF61 Compliant				
N.3					
N.4					

PRELIMINARY NOT FOR CONSTRUCTION
THE INFORMATION ON THIS DRAWING IS INTENDED FOR CONCEPTUAL DEVELOPMENT, PRELIMINARY DESIGN, OR FOR GUIDANCE ONLY. THIS DOCUMENT SHOULD NOT BE CONSIDERED A FINALIZED PROFESSIONAL WORK PRODUCT.

R - REVISIONS

	Rev	Date	Rev Description	Originator	Checker	Approver
R.1	A	23 Jan 23	Issued for Review	MTB CV	MTB MTB	MSM
R.2						
R.3						

PRESSURE GAUGE

	Document No:	17805-IC-DAS-022	
Client Name:	City & Borough of Wrangell	**Project No.:** 17805	9087A 198 St, Langley, BC, V1M 3B1
Project Name:	Wrangell WTP		Telephone No.: +1 (604) 936-4217

G - GENERAL					
G.1	Tag Number		03-PI-144/164/184/244/264/284		
G.2	Service		Filter #1/#2/#3/#4/#5/#6 Plenum Pressure		
G.3	P&ID No.	Line / Equipment No.	17805-PR-PID-006/007	03-TK-140/160/180/240/260/280	
G.4	Line Size & Schedule	Line Material	1/2"	-	
G.5	Electrical Area Class	Temperature Code	General Purpose, Washdown	N/A	
G.6	Location	Ambient Temperature - °F	Field	59-86	
P - PROCESS					
P.1	Fluid	State	Water	Liquid	
P.2	Corrosive / Erosive	Sour Service - ppm	N/A	0	
P.3	Design Pressure - PSIG	Design Temperature - °F	87	113	
	Process Conditions		@Min	@Norm	@Max
P.4	Pressure - PSIG		0.5	4	4.3
P.5	Temperature -°F		37	50	63
P.6	SG @ Opr		1		
P.7	Molecular Weight @ Opr - g/mol		18.015		
P.8	Viscosity @ Opr - cP		1.4		
P.9	Pulsating Service (Yes/ No)		No		
P.10	Fouling Service (Yes/No)		No		
P.11	Atmospheric Pressure - PSIA		14.25		
T - GAUGE GENERAL					
T.1	Type		Bourdon Tube		
T.2	Instrument Range - psi(g)		0-10		
T.3	Process Location (Bottom, Top, Back)		Bottom		
T.4	Process Connection - Size/Type/Rating		1/2"	NPT	150#
T.5	Accuracy	Increments	+/- 2 1/2 % of span	N/A	
T.6	Blowout Protection (Yes/No)	Blowout Location	Yes	Back	
T.7	Element Material	Movement Material	Lead Free Copper	Copper Alloy	
T.8	Case Material	Window Material	SS304	Polycarbonate w/ Buna-N gasket	
T.9	Ring Material	Zero Adjustment (Yes/No)	SS304	No	
T.10	Dial Size	Dial Color	2 1/2"	White	
T.11	Fill Fluid (Y/N)	Fill Fluid Material	Yes	Glycerine 99.7%	
T.12	Pressure Rating PSIG	Temperature Rating (Min/Max)	150	-4 to 140 [°F]	
F - MANIFOLD					
F.1	Manifold Type & Size	Manifold Material	N/A	N/A	
F.2	Manifold Manufacturer	Manifold Model Number	N/A	N/A	
F.3	Mounting Bracket		N/A		
O - OPTIONS					
O.1	Siphon (Mfr/Model)	Siphon Material	N/A	N/A	
M - MANUFACTURER					
M.1	Manufacturer	Model No.	Wika	213.53DW	
M.2	Serial Number		N/A		
N - NOTES					
N.1	Vendor to provide stainless steel tags with stainless steel wire fasteners.				
N.2	Need to be NSF61 Compliant				
N.3					
N.4					

PRELIMINARY
NOT FOR CONSTRUCTION
THE INFORMATION ON THIS DRAWING IS INTENDED FOR CONCEPTUAL DEVELOPMENT, PRELIMINARY DESIGN, OR FOR GUIDANCE ONLY. THIS DOCUMENT SHOULD NOT BE CONSIDERED A FINALIZED PROFESSIONAL WORK PRODUCT.

R - REVISIONS

	Rev	Date	Rev Description	Originator	Checker	Approver
R.1	A	23 Jan 23	Issued for Review	MTB CV	MTB MTB	MSM
R.2						
R.3						

PRESSURE TRANSMITTER

Document No:	17805-IC-DAS-023		
Client Name:	City & Borough of Wrangell	**Project No.:** 17805	9087A 198 St, Langley, BC, V1M 3B1
Project Name:	Wrangell WTP		Telephone No.: +1 (604) 936-4217

G - GENERAL					
G.1	Tag Number		02-PT-122/222/322		
G.2	Service		DAF Train #1/#2/#3 Saturator Recycle Pump Suction Pressure		
G.3	P&ID No.	Line / Equipment No.	17805-PR-PID-003	TW-101/201/301	
G.4	Line Size & Schedule	Line Material	4"	SS4	
G.5	Electrical Area Class	Temperature Code	General Purpose, Washdown	N/A	
G.6	Location	Ambient Temperature - °F	Field	59 - 86	
P - PROCESS					
P.1	Fluid	State	Water	Liquid	
P.2	Corrosive / Erosive	Sour Service - ppm	No	0	
P.3	Design Pressure - psi(g)	Design Temperature - °F	45	113	
	Process Conditions		@Min	@Norm	@Max
P.4	Pressure - psi(g)		5	5	5
P.5	Temperature -°F		37	50	63
P.6	SG @ Operating		1		
P.7	Molecular Weight @ Operating - g/mol		18.02		
P.8	Viscosity @ Operating - cP		1.2		
P.9	Pulsating Service (Yes/ No)		No		
P.10	Fowling Service (Yes/No)		No		
P.11	Atmospheric Pressure - psi(a)		14.25		
T - TRANSMITTER GENERAL					
T.1	Type		Capacitance		
T.2	Calibrated Span - psi(g)		-30 inHG to +15 psig		
T.3	Instrument Range - psi(g)		-30 inHG to +15 psig		
T.4	Process Connection - Size/Type/Rating		1/2"	NPT	150#
T.5	Accuracy	Response Time	+/- 0.5%	15 ms	
T.6	Output Signal	Power Supply	4-20mA	24V DC (Loop Power)	
T.7	Housing Material	Body Material	316L SS	316L SS	
T.8	Element Material	Seal Material	316L SS	-	
T.9	Electrical Connection	Enclosure Class	2 wire	IP 65	
T.10	Pressure Rating psi(g)	Temperature Rating - Min/Max	45	0/80°F	
T.11	Local Display	Ambient Temperature Rating	No	0/80°F	
T.12	Burnout Direction	Fill Material	Note 1	-	
F - MANIFOLD					
F.1	Manifold Type & Size	Manifold Material	-	-	
F.2	Manifold Manufacturer	Manifold Model Number	-	-	
F.3	Mounting Bracket		-		
O - OPTIONS					
O.1	Remote Display - Yes/No		No		
M - MANUFACTURER					
M.1	Manufacturer	Model No.	Wika	A-10	
M.2	Serial Number		Note 1		
N - NOTES					
N.1	Vendor to populate during time of quote				
N.2					
N.3					
N.4					

PRELIMINARY
NOT FOR CONSTRUCTION
THE INFORMATION ON THIS DRAWING IS INTENDED FOR CONCEPTUAL DEVELOPMENT, PRELIMINARY DESIGN, OR FOR GUIDANCE ONLY. THIS DOCUMENT SHOULD NOT BE CONSIDERED A FINALIZED PROFESSIONAL WORK PRODUCT.

R - REVISIONS

	Rev	Date	Rev Description	Originator	Checker	Approver
R.3	A	23 Jan 23	Issued for Review	MTB CV	MTB MTB	MSM
R.2						
R.1						

PRESSURE TRANSMITTER

Document No:	17805-IC-DAS-024		
Client Name:	City & Borough of Wrangell	**Project No.:** 17805	9087A 198 St, Langley, BC, V1M 3B1
Project Name:	Wrangell WTP		Telephone No.: +1 (604) 936-4217

G - GENERAL					
G.1	Tag Number		02-PT-124/224/324		
G.2	Service		DAF Train #1/#2/#3 Saturator Recycle Pump Discharge Pressure		
G.3	P&ID No.	Line / Equipment No.	17805-PR-PID-003	TW-101/201/301	
G.4	Line Size & Schedule	Line Material	3"	SS4	
G.5	Electrical Area Class	Temperature Code	General Purpose, Washdown	N/A	
G.6	Location	Ambient Temperature - °F	Field	59 - 86	
P - PROCESS					
P.1	Fluid	State	Water	Liquid	
P.2	Corrosive / Erosive	Sour Service - ppm	No	0	
P.3	Design Pressure - PSI(g)	Design Temperature - °F	150	113	
	Process Conditions		@Min	@Norm	@Max
P.4	Pressure - PSI		85	90	110
P.5	Temperature -°F		37	50	63
P.6	SG @ Operating		1		
P.7	Molecular Weight @ Operating - g/mol		18.02		
P.8	Viscosity @ Operating - cP		1.2		
P.9	Pulsating Service (Yes/ No)		No		
P.10	Fowling Service (Yes/No)		No		
P.11	Atmospheric Pressure - PSI(a)		14.25		
T - TRANSMITTER GENERAL					
T.1	Type		Capacitance		
T.2	Calibrated Span - PSI (g)		0-160		
T.3	Instrument Range - PSI (g)		0-160		
T.4	Process Connection - Size/Type/Rating		1/2"	NPT	150#
T.5	Accuracy	Response Time	0.50%	15 ms	
T.6	Output Signal	Power Supply	4-20mA	24V DC	
T.7	Housing Material	Body Material	316L SS	316L SS	
T.8	Element Material	Seal Material	316L SS	-	
T.9	Electrical Connection	Enclosure Class	2 wire	IP 65	
T.10	Pressure Rating psi(g)	Temperature Rating - Min/Max	480	0/80°F	
T.11	Local Display	Ambient Temperature Rating	No	0/80°F	
T.12	Burnout Direction	Fill Material	Note 1	-	
F - MANIFOLD					
F.1	Manifold Type & Size	Manifold Material	-	-	
F.2	Manifold Manufacturer	Manifold Model Number	-	-	
F.3	Mounting Bracket		-		
O - OPTIONS					
O.1	Remote Display - Yes/No		No		
M - MANUFACTURER					
M.1	Manufacturer	Model No.	Wika	A-10	
M.2	Serial Number		Note 1		
N - NOTES					
N.1	Vendor to populate during time of quote				
N.2					
N.3					
N.4					

PRELIMINARY NOT FOR CONSTRUCTION
THE INFORMATION ON THIS DRAWING IS INTENDED FOR CONCEPTUAL DEVELOPMENT, PRELIMINARY DESIGN, OR FOR GUIDANCE ONLY. THIS DOCUMENT SHOULD NOT BE CONSIDERED A FINALIZED PROFESSIONAL WORK PRODUCT.

R - REVISIONS

	Rev	Date	Rev Description	Originator	Checker	Approver
R.3	A	23 Jan 23	Issued for Review	MTB CV	MTB MTB	MSM MSM
R.2						
R.1						

PRESSURE TRANSMITTER

	Document No:	17805-IC-DAS-025			
Client Name:	City & Borough of Wrangell		**Project No.:**	17805	9087A 198 St, Langley, BC, V1M 3B1
Project Name:	Wrangell WTP				Telephone No.: +1 (604) 936-4217

G - GENERAL					
G.1	Tag Number		02-PT-143/163/183/243/263/283		
G.2	Service		Filter #1/#2/#3/#4/#5/#6 Plenum Pressure		
G.3	P&ID No.	Line / Equipment No.	17805-PR-PID-006/007	03-TK-140/160/180/240/260/280	
G.4	Line Size & Schedule	Line Material	-	SS4	
G.5	Electrical Area Class	Temperature Code	General Purpose, Washdown	N/A	
G.6	Location	Ambient Temperature - °F	Field	59 - 86	
P - PROCESS					
P.1	Fluid	State	Water	Liquid	
P.2	Corrosive / Erosive	Sour Service - ppm	No	0	
P.3	Design Pressure - PSI(g)	Design Temperature - °F	87	113	
	Process Conditions		@Min	@Norm	@Max
P.4	Pressure - PSI		0.5	4	4.3
P.5	Temperature -°F		37	50	63
P.6	SG @ Operating		1		
P.7	Molecular Weight @ Operating - g/mol		18.02		
P.8	Viscosity @ Operating - cP		1.2		
P.9	Pulsating Service (Yes/ No)		No		
P.10	Fowling Service (Yes/No)		No		
P.11	Atmospheric Pressure - PSI(a)		14.25		
T - TRANSMITTER GENERAL					
T.1	Type		Capacitance		
T.2	Calibrated Span - PSI (g)		0-15		
T.3	Instrument Range - PSI (g)		0-15		
T.4	Process Connection - Size/Type/Rating		1/2"	NPT	150#
T.5	Accuracy	Response Time	0.50%	15 ms	
T.6	Output Signal	Power Supply	4-20mA	24V DC	
T.7	Housing Material	Body Material	316L SS	316L SS	
T.8	Element Material	Seal Material	316L SS	-	
T.9	Electrical Connection	Enclosure Class	2 wire	IP 65	
T.10	Pressure Rating	Temperature Rating - Min/Max	45 PSI	0/80°F	
T.11	Local Display	Ambient Temperature Rating	No	0/80°F	
T.12	Burnout Direction	Fill Material	Note 1	-	
F - MANIFOLD					
F.1	Manifold Type & Size	Manifold Material	-	-	
F.2	Manifold Manufacturer	Manifold Model Number	-	-	
F.3	Mounting Bracket		-		
O - OPTIONS					
O.1	Remote Display - Yes/No		No		
M - MANUFACTURER					
M.1	Manufacturer	Model No.	Wika	A-10	
M.2	Serial Number		Note 1		
N - NOTES					
N.1	Vendor to populate during time of quote				
N.2					
N.3					
N.4					

PRELIMINARY NOT FOR CONSTRUCTION
THE INFORMATION ON THIS DRAWING IS INTENDED FOR CONCEPTUAL DEVELOPMENT, PRELIMINARY DESIGN, OR FOR GUIDANCE ONLY. THIS DOCUMENT SHOULD NOT BE CONSIDERED A FINALIZED PROFESSIONAL WORK PRODUCT.

R - REVISIONS

	Rev	Date	Rev Description	Originator	Checker	Approver
R.3	A	23 Jan 23	Issued for Review	MTB CV	MTB MTB	MSM
R.2						
R.1						

TURBIDITY SENSOR and Controller

Document No: 17805-IC-DAS-026

Client Name:	City & Borough of Wrangell	**Project No.:**	17805	9087A 198 St, Langley, BC, V1M 3B1
Project Name:	Wrangell WTP			Telephone No.: +1 (604) 936-4217

G - GENERAL					
G.1	Tag Number		03-AIT-145/165/185		
G.2	Service		Filter #1/#2/#3 Effluent Turbidity		
G.3	P&ID No.	Line / Equipment No.	17805-PR-PID-006	03-TK-140/160/180	
G.4	Line Size & Schedule	Line Material	1/2" SCH. 10	PVC	
G.5	Electrical Area Class	Temperature Code	General Purpose, Washdown	N/A	
G.6	Location	Ambient Temperature - °F	Field	59 - 86	
P - PROCESS					
P.1	Fluid	State	Water	Liquid	
P.2	Corrosive / Erosive	Sour Service - ppm	No	0	
P.3	Design Pressure - PSIg	Design Temperature - °F	87	113	
	PROCESS CONDITIONS		@Min	@Norm	@Max
P.4	Pressure - PSIg		0.5	3	4.3
P.5	Temperature -°F		37	50	63
P.6	SG @ Opr	Molecular Weight @ Opr - g/mol	1.00	18.02	
P.7	Conductivity @ Opr - uS/cm	Compressibility @ Opr	-	45.8	
P.8	DP @ Max -PSI	Fluid Velocity @ Max - m/s	0	1.524	
P.9	% Solids	Solids Type	<1	Crystalline	
P.10	Atmospheric Pressure - PSI (a)		14.25		
T - TRANSMITTER GENERAL					
T.1	Calibrated Range - NTU		0 - 10		
T.2	Accuracy	Response Time	+/-2% from 0-40 NTU	T90 < 45s at 100mL/min	
T.3	Output Signal	Power Supply	4 to 20 mA (x4)	120 VAC / 60 Hz	
T.4	Housing Material	Coating	ABS (Display module) / Metal (Probe Module)	Corrosion-resistant finish	
T.5	Electrical Connection	Enclosure Class	1/2" NPT	IP65	
T.6	Local Display	Ambient Temperature Rating	Yes	-4 to 158 °F	
T.7	Mounting Type	Model No.	Remote	LXV402.99.00002 (Qty 1) LXV400.99.1R572 (Qty 1)	
T.8	Mounting Bracket		N/A		
E - TRANSMITTER ELEMENT					
E.1	Process Connection - Size/Type/Rating		1/4" OD	TUBING	N/A
E.2	Design Pressure - PSI (g)	Design Temperature - °F	87	32 - 122	
E.3	Nominal Range - NTU		0 - 700 (EPA)		
E.4	Linearity	Repeatability	Better than 1% (0-40 NTU)	< 1%	
E.5	Output Signal - mA	Number of Transducers	Digital to Controller	1	
E.6	Housing Material	Coating	ASA Luran S 777K	TPE RESIN Elastocon® STK40	
E.7	Electrical Connection	Enclosure Class	N/A	IP55/IP65	
E.8	Upstream Diameters - mm	Downstream Diameters- mm	N/A	N/A	
E.9	Face to Face Dimensions - mm		N/A		
O - OPTIONS					
O.1	Controller	Units	SC1000	NTU (Programmable)	
O.2	Cable Type	Cable Model	Note 3	Note 3	
M - MANUFACTURER					
M.1	Manufacturer	Model No.	Hach	TU5300SC Turbidimeter (Qty 3)	
M.2	Serial Number		N/A		

N - NOTES

N.1	Calibration set (Model LZY835) included (Qty1)
N.2	Sensor Element Model #: LXV445.99.10112 (Qty 3)
N.3	Extension cables required for sensor elements to connect to controller.
N.4	Common SC1000 Display controller with 3 Turbidimeter sensors.

PRELIMINARY NOT FOR CONSTRUCTION

THE INFORMATION ON THIS DRAWING IS INTENDED FOR CONCEPTUAL DEVELOPMENT, PRELIMINARY DESIGN, OR FOR GUIDANCE ONLY. THIS DOCUMENT SHOULD NOT BE CONSIDERED A FINALIZED PROFESSIONAL WORK PRODUCT.

R - REVISIONS

	Rev	Date	Rev Description	Originator	Checker	Approver
R.1	A	23 Jan 23	Issued for Review	MTB CV	MTB MTB	MSM
R.2						
R.3						

PRESSURE REGULATOR VALVE

		Document No:	17805-IC-DAS-027		
Client Name:	City & Borough of Wrangell		**Project No.:**	17805	9087A 198 St, Langley, BC, V1M 3B1
Project Name:	Wrangell WTP				Telephone No.: +1 (604) 936-4217

G - GENERAL					
G.1	Tag Number		02-PCV-131/231/331		
G.2	Service		DAF #1/#2/#3 - Saturator Air Supply		
G.3	P&ID No.	Line / Equipment No.	17805-PR-PID-003	1/2"-PA-801/802/803-SS4	
G.4	Line Size & Schedule	Line Material	1/2"	SS304	
G.5	Electrical Area Class	Temperature Code	General Purpose, Washdown	N/A	
G.6	Location	Ambient Temperature - °F	Field	59-86	
P - PROCESS					
P.1	Fluid	State	Air	Gas	
P.2	Corrosive/Erosive Service	Sour Service - ppm	No	0	
P.3	Design Pressure - PSI (g)	Design Temperature - °F	150	176	
	Process Conditions		@Min	@Norm	@Max
P.4	Flow Rate - SCFM		0	8.95	8.95
P.5	Inlet Pressure - PSI(g)		120	110	65
P.6	Differential Pressure - PSI(g)		55	45	0
P.7	Vapour Pressure - PSI		N/A	N/A	N/A
P.8	Temperature -°F		104	113	122
P.9	SG (Note 1)		7.1	7.7	8.6
P.10	Molecular Weight - g/mol		28.96	28.96	28.96
P.11	Viscosity - cP		0.01845	0.01897	0.01923
P.12	Critical Pressure - PSI(a)	Critical Temperature -°F	905	97.3	
P.13	Max Sound Level Allowed - dBA		85		
P.14	Atmospheric Pressure - PSI(a)		14.25		
V - VALVE BODY					
V.1	Type	Size - inch	Regulator Valve	1/2"	
V.2	Process Connection - Size/Type/Rating		1/2"	FNPT	150#
V.3	Set Pressure - psig	Rated Cv	65	-	
V.4	Orifice Size - in	Orifice Material	1/2"	Aluminum Die Cast	
V.5	Body Material	Connection Material	Aluminum Die Cast	Aluminum Die Cast	
V.6	Trim Material	Disk Material	Aluminum Die Cast	-	
V.7	Spring Case Material	Diaphragm Material	Polyacetal	Weatherable NBR	
V.8	Maximum Flow Capacity	Outlet Pressure Range - PSI(g)	28 cfm	0-150	
V.9	Pressure Rating - PSI(g)	Face to Face Dimension - in	400	2.8	
A - ACTUATOR					
A.1	Type - Diaphragm/Pilot		N/A		
A.2	Diaphragm Casing Material	Diaphragm Material	N/A	N/A	
A.3	Pilot Material	Pilot Pressure Supply - PSI (g)	N/A	N/A	
A.4	Pilot Spring Range	Pilot Supply Regulator - Yes/No	N/A		
O - OPTIONS					
O.1	Filter		No		
O.2	Internal Relief Valve		No		
O.3	Vent		No		
M - MANUFACTURER					
M.1	Manufacturer	Model No.	SMC	AR40-N04G-Z-B	
M.2	Serial Number		N/A		
N - NOTES					
N.1	SG given in comparison to air at STP				
N.2					
N.3					
N.4					

PRELIMINARY
NOT FOR CONSTRUCTION
THE INFORMATION ON THIS DRAWING IS INTENDED FOR CONCEPTUAL DEVELOPMENT, PRELIMINARY DESIGN, OR FOR GUIDANCE ONLY. THIS DOCUMENT SHOULD NOT BE CONSIDERED A FINALIZED PROFESSIONAL WORK PRODUCT.

R - REVISIONS

	Rev	Date	Rev Description	Originator	Checker	Approver
R.1	A	23 Jan 23	Issued for Review	MTB for CV	MTB MTB	MSM MSM
R.2						
R.3						

PRESSURE GAUGE

	Document No:	17805-IC-DAS-028	
Client Name:	City & Borough of Wrangell	**Project No.:** 17805	9087A 198 St, Langley, BC, V1M 3B1
Project Name:	Wrangell WTP		Telephone No.: +1 (604) 936-4217

G - GENERAL					
G.1	Tag Number		08-PI-820		
G.2	Service		Air Compressor Package Outlet Pressure		
G.3	P&ID No.	Line / Equipment No.	17805-PR-PID-004	-	
G.4	Line Size & Schedule	Line Material	1/2"	-	
G.5	Electrical Area Class	Temperature Code	General Purpose, Washdown	N/A	
G.6	Location	Ambient Temperature - °F	Field	59-86	
P - PROCESS					
P.1	Fluid	State	Air	Gas	
P.2	Corrosive / Erosive	Sour Service - ppm	N/A	0	
P.3	Design Pressure - PSIG	Design Temperature - °F	150	176	
	Process Conditions		@Min	@Norm	@Max
P.4	Pressure - PSIG		65	100	120
P.5	Temperature -°F		104	115	122
P.6	SG @ Opr		1		
P.7	Molecular Weight @ Opr - g/mol		18.015		
P.8	Viscosity @ Opr - cP		1.4		
P.9	Pulsating Service (Yes/ No)		No		
P.10	Fouling Service (Yes/No)		No		
P.11	Atmospheric Pressure - PSIA		14.25		
T - GAUGE GENERAL					
T.1	Type		Bourdon Tube		
T.2	Instrument Range - psi(g)		0-200		
T.3	Process Location (Bottom, Top, Back)		Bottom		
T.4	Process Connection - Size/Type/Rating		1/2"	NPT	150#
T.5	Accuracy	Increments	+/- 2 1/2 % of span	N/A	
T.6	Blowout Protection (Yes/No)	Blowout Location	Yes	Back	
T.7	Element Material	Movement Material	Lead Free Copper	Copper Alloy	
T.8	Case Material	Window Material	SS304	Polycarbonate w/ Buna-N gasket	
T.9	Ring Material	Zero Adjustment (Yes/No)	SS304	No	
T.10	Dial Size	Dial Color	2 1/2"	White	
T.11	Fill Fluid (Y/N)	Fill Fluid Material	Yes	Glycerine 99.7%	
T.12	Pressure Rating PSIG	Temperature Rating (Min/Max)	150	-4 to 140 [°F]	
F - MANIFOLD					
F.1	Manifold Type & Size	Manifold Material	N/A	N/A	
F.2	Manifold Manufacturer	Manifold Model Number	N/A	N/A	
F.3	Mounting Bracket		N/A		
O - OPTIONS					
O.1	Siphon (Mfr/Model)	Siphon Material	N/A	N/A	
M - MANUFACTURER					
M.1	Manufacturer	Model No.	Wika	213.53DW	
M.2	Serial Number		N/A		
N - NOTES					
N.1	Vendor to provide stainless steel tags with stainless steel wire fasteners.				
N.2					
N.3					
N.4					

PRELIMINARY
NOT FOR CONSTRUCTION
THE INFORMATION ON THIS DRAWING IS INTENDED FOR CONCEPTUAL DEVELOPMENT, PRELIMINARY DESIGN, OR FOR GUIDANCE ONLY. THIS DOCUMENT SHOULD NOT BE CONSIDERED A FINALIZED PROFESSIONAL WORK PRODUCT.

R - REVISIONS

	Rev	Date	Rev Description	Originator	Checker	Approver
R.1	A	23 Jan 23	Issued for Review	MTBCV	MTBMTB	MSMMSM
R.2						
R.3						

TURBIDITY SENSOR and Controller

Document No: 17805-IC-DAS-029

Client Name:	City & Borough of Wrangell	**Project No.:**	17805	9087A 198 St, Langley, BC, V1M 3B1
Project Name:	Wrangell WTP			Telephone No.: +1 (604) 936-4217

G - GENERAL					
G.1	Tag Number		03-AIT-245/265/285		
G.2	Service		Filter #4/#5/#6 Effluent Turbidity		
G.3	P&ID No.	Line / Equipment No.	17805-PR-PID-007	03-TK-240/260/280	
G.4	Line Size & Schedule	Line Material	1/2" SCH. 10	PVC	
G.5	Electrical Area Class	Temperature Code	General Purpose, Washdown	N/A	
G.6	Location	Ambient Temperature - °F	Field	59 - 86	
P - PROCESS					
P.1	Fluid	State	Water	Liquid	
P.2	Corrosive / Erosive	Sour Service - ppm	No	0	
P.3	Design Pressure - PSIg	Design Temperature - °F	87	113	
	PROCESS CONDITIONS		@Min	@Norm	@Max
P.4	Pressure - PSIg		0.5	3	4.3
P.5	Temperature -°F		37	50	63
P.6	SG @ Opr	Molecular Weight @ Opr - g/mol	1.00	18.02	
P.7	Conductivity @ Opr - uS/cm	Compressibility @ Opr	-	45.8	
P.8	DP @ Max -PSI	Fluid Velocity @ Max - m/s	0	1.524	
P.9	% Solids	Solids Type	<1	Crystalline	
P.10	Atmospheric Pressure - PSI (a)		14.25		
T - TRANSMITTER GENERAL					
T.1	Calibrated Range - NTU		0 - 10		
T.2	Accuracy	Response Time	+/-2% from 0-40 NTU	T90 < 45s at 100mL/min	
T.3	Output Signal	Power Supply	4 to 20 mA (x4)	120 VAC / 60 Hz	
T.4	Housing Material	Coating	ABS (Display module) / Metal (Probe Module)	Corrosion-resistant finish	
T.5	Electrical Connection	Enclosure Class	1/2" NPT	IP65	
T.6	Local Display	Ambient Temperature Rating	Yes	-4 to 158 °F	
T.7	Mounting Type	Model No.	Remote	LXV402.99.00002 (Qty 1) LXV400.99.1R572 (Qty 1)	
T.8	Mounting Bracket		N/A		
E - TRANSMITTER ELEMENT					
E.1	Process Connection - Size/Type/Rating		1/4" OD	TUBING	N/A
E.2	Design Pressure - PSI (g)	Design Temperature - °F	87	32 - 122	
E.3	Nominal Range - NTU		0 - 700 (EPA)		
E.4	Linearity	Repeatability	Better than 1% (0-40 NTU)	< 1%	
E.5	Output Signal - mA	Number of Transducers	Digital to Controller	1	
E.6	Housing Material	Coating	ASA Luran S 777K	TPE RESIN Elastocon® STK40	
E.7	Electrical Connection	Enclosure Class	N/A	IP55/IP65	
E.8	Upstream Diameters - mm	Downstream Diameters- mm	N/A	N/A	
E.9	Face to Face Dimensions - mm		N/A		
O - OPTIONS					
O.1	Controller	Units	SC1000	NTU (Programmable)	
O.2	Cable Type	Cable Model	Note 3	Note 3	
M - MANUFACTURER					
M.1	Manufacturer	Model No.	Hach	TU5300SC Turbidimeter (Qty 3)	
M.2	Serial Number		N/A		

N - NOTES

N.1	Calibration set (Model LZY835) included (Qty1)
N.2	Sensor Element Model #: LXV445.99.10112 (Qty 3)
N.3	Extension cables required for sensor elements to connect to controller.
N.4	Common SC1000 Display controller with 3 Turbidimeter sensors.

PRELIMINARY NOT FOR CONSTRUCTION

THE INFORMATION ON THIS DRAWING IS INTENDED FOR CONCEPTUAL DEVELOPMENT, PRELIMINARY DESIGN, OR FOR GUIDANCE ONLY. THIS DOCUMENT SHOULD NOT BE CONSIDERED A FINALIZED PROFESSIONAL WORK PRODUCT.

R - REVISIONS

	Rev	Date	Rev Description	Originator	Checker	Approver
R.1	A	23 Jan 23	Issued for Review	MTB CV	MTB MTB	MSM MSM
R.2						
R.3						