VAULT COPY

DPM™ 3

Vital Signs Monitor

Operator's Manual

mindray

Revision History

This manual has a revision number. This revision number changes whenever the manual is updated due to software or technical specification change. Contents of this manual are subject to change without prior notice.

- Revision number: 3.0
- Release time: 2010-04

© Copyright 2008-2010 Mindray DS USA, Inc. All rights reserved.

⚠ WARNING

- **Federal Law (USA) restricts this device to sale by or on the order of a physician.**

Intellectual Property Statement

Mindray DS USA, Inc. (hereinafter called Mindray DS) owns the intellectual property rights to this product and this manual. This manual may refer to information protected by copyrights or patents and does not convey any license under the copyright and the patent rights of Mindray DS, nor the rights of others.

Mindray DS intends to maintain the contents of this manual as confidential information. Disclosure of the information in this manual in any manner whatsoever without the written permission of Mindray DS is strictly forbidden. Release, amendment, reproduction, distribution, rental, adaption and translation of this manual in any manner whatsoever without the written permission of Mindray DS is strictly forbidden.

mindray® is a trademark or a registered trademark of Shenzhen Mindray Bio-Medical Electronics Co., Ltd. All third-party trademarks that appear in this manual are used solely for editorial purposes and are the property of their respective owners.

Contents of this manual are subject to changes without prior notice.

© 2008-2010 Mindray DS USA, Inc. All rights reserved.

Manufacturer’s Responsibility

All information contained in this manual is believed to be correct. Mindray DS shall not be liable for errors contained herein nor for incidental or consequential damages in connection with the furnishing or use of this manual.

Mindray will not be liable for the effects on safety, reliability and performance of this product if:

- any installation operations, expansions, changes, modifications and repairs of this product are not conducted by Mindray DS authorized personnel; and
- the electrical installation of the relevant room does not comply with the applicable national and local requirements; and
- the product is not used in accordance with the instructions for use.

Warranty

This warranty is exclusive and is in lieu of all other warranties, expressed or implied, including warranties of merchantability or fitness for any particular purpose.

Exemptions

Mindray DS's obligation or liability under this warranty does not include any transportation or other charges or liability for direct, indirect or consequential damages or delay resulting from the improper use or application of the product or the use of parts or accessories not approved by Mindray DS or repairs by people other than Mindray DS authorized personnel.

This warranty shall not extend to

- Any Mindray DS product which has been subjected to misuse, negligence or accident; or
- Any Mindray DS product from which Mindray DS's original serial number tag or product identification markings have been altered or removed; or
- Any product of any other manufacturer.

Return Policy

In the event that it becomes necessary to return a unit to Mindray DS, follow the instructions below.

1. Return authorization.

Contact the Customer Service Department and obtain a Customer Service Authorization number. This number must appear on the outside of the shipping container. Returned shipments will not be accepted if the number is not clearly visible. Please provide the model number, serial number, and a brief description of the reason for return.

2. Freight policy

The customer is responsible for freight charges when this product is shipped to Mindray DS for service (this includes customs charges).

3. Return address

Please send the part(s) or equipment to the address offered by the Customer Service Department.

Contact Information

Manufacturer:	Mindray DS USA, Inc.
Address:	800 MacArthur Blvd.Mahwah, New Jersey 07430 USA
Tel:	1.800.288.2121, 1.201.995.8000
Website:	www.mindray.com

Preface

Manual Purpose

This manual contains the instructions necessary to operate the product safely and in accordance with its function and intended use. Observance of this manual is a prerequisite for proper product performance and correct operation and ensures patient and operator safety.

This manual is based on the maximum configuration and therefore some contents may not apply to your product. If you have any question, please contact us.

This manual is an integral part of the product. It should always be kept close to the equipment so that it can be obtained conveniently when needed.

Intended Audience

This manual is geared for clinical professionals who are expected to have a working knowledge of medical procedures, practices and terminology as required for monitoring of critically ill patients.

Illustrations

All illustrations in this manual serve as examples only. They may not necessarily reflect the setup or data displayed on your patient monitor.

Conventions

- ***Italic*** text is used in this manual to quote the referenced chapters or sections.
- The terms warning, and caution are used throughout this manual to point out hazards and to designate a degree or level of severity.
- → is used to indicate operational procedures.

FOR YOUR NOTES

Contents

Warranty III
Exemptions III

1 Safety 1-1
1.1 Safety Information 1-1
1.1.1 Warnings 1-2
1.1.2 Cautions 1-3
1.1.3 Notes 1-4
1.2 Equipment Symbols 1-4

2 The Basics 2-1
2.1 Monitor Description 2-1
2.1.1 Intended Use 2-1
2.1.2 Contraindications 2-1
2.1.3 Components 2-2
2.1.4 Functions 2-2
2.2 Appearance 2-3
2.2.1 Front Panel 2-3
2.2.2 Rear Panel 2-7
2.2.3 Recorder 2-8
2.3 Display 2-9
2.3.1 Cursor 2-9
2.4 Battery 2-10
2.4.1 Battery Maintenance 2-11
2.4.2 Battery Recycling 2-12

3 Installation and Maintenance 3-1
3.1 Installation 3-1
3.1.1 Unpacking and Checking 3-1
3.1.2 Environmental Requirements 3-2
3.1.3 Power Supply Requirements 3-2
3.1.4 Bracket Mounting 3-2
3.1.5 Installation Method 3-3
3.1.6 Powering on the Monitor 3-7
3.1.7 Powering off the Monitor 3-7
3.2 Maintenance 3-7
3.2.1 Inspection 3-8
3.2.2 Cleaning 3-8
3.2.3 Disinfection 3-10

4 Menus and Screens 4-1

4.1 Patient Information 4-1
4.2 System Setup 4-2
4.2.1 Common Setup 4-2
4.2.2 Network Setup 4-3
4.2.3 Time Setup 4-4
4.2.4 User Maintenance 4-4
4.2.5 Nurse Call Setup 4-5
4.2.6 Version 4-6
4.2.7 Configuration 4-6
4.2.8 Exporting Data 4-7
4.3 Normal Screen 4-7
4.4 Trend Screen 4-8
4.5 Standby State 4-9
4.5.1 Entering the Standby State 4-9
4.5.2 Exiting the Standby State 4-9
4.6 Patient Review System Software 4-9

5 Alarms 5-1
5.1 Overview 5-1
5.1.1 Alarm Categories 5-1
5.1.2 Alarm Levels 5-2
5.2 Alarm Indications 5-2
5.2.1 Alarm Lamp 5-3
5.2.2 Audible Alarms 5-3
5.2.3 Alarm Messages 5-3
5.3 Alarm Status 5-4
5.3.1 Audio Off 5-4
5.3.2 Physiological Alarm Off 5-5
5.3.3 Alarms Paused 5-5
5.3.4 Alarm Silenced 5-6
5.3.5 Status Switchover 5-6
5.4 Clearing Alarm Indications 5-7
5.5 Setting Alarms 5-7
5.6 SpO_2 Sensor Off Alarm 5-8
5.7 When an Alarm Occurs 5-8

6 Recording 6-1
6.1 Overview 6-1
6.2 Using the Recorder 6-1
6.2.1 Printing Real-time PLETH waveform 6-1
6.2.2 Printing Currently Displayed Trend Data 6-1
6.2.3 Printing All Trend Data of the Current Patient 6-1
6.3 Loading Paper 6-2
6.4 Removing Paper Jam 6-3

7 SpO_2 Monitoring 7-1
7.1 Introduction 7-1
7.2 Safety 7-2
7.3 Monitoring Procedure 7-3
7.4 Measurement Limitations 7-3
7.5 Masimo Information 7-4
7.6 Nellcor Information 7-4

8 NIBP Monitoring 8-1
8.1 Overview 8-1
8.2 Monitoring Procedure 8-2
8.2.1 Cuff Selection and Placement 8-2
8.2.2 Operation Guides 8-3
8.3 Measurement Limitations 8-4
8.4 NIBP Reset, Calibration and Test for Air Leakage 8-5
8.4.1 Resetting NIBP 8-5
8.4.2 Calibrating NIBP 8-5
8.4.3 NIBP Leakage Test 8-6

9 TEMP Monitoring 9-1
9.1 Overview 9-1
9.2 Temperature Setup 9-2
9.3 Monitoring Procedure 9-2
9.3.1 TEMP position 9-2
9.3.2 Oral Temperature Measurement 9-3
9.3.3 Axillary Temperature Measurement 9-3
9.3.4 Measuring Rectal Temperature 9-4
9.3.5 Temperature Measurement in MONITOR Mode 9-5
9.4 Decontamination of the SmarTemp™ TEMP Probe 9-5
9.5 Precautions 9-6

10 Accessories 10-1
10.1 SpO_2 Accessories 10-1
10.2 NIBP Accessories 10-3
10.3 TEMP Accessories 10-4
10.4 Others 10-4

A Product Specifications A-1
A.1 Safety Specifications A-1
A.2 Environmental Specifications A-1
A.3 Power Requirements A-2
A.4 Hardware Specification A-3
A.5 Signal Output A-4
A.6 SpO_2 Specification A-4

A.6.1 Mindray DS SpO_2 Specification A-4
A.6.2 Masimo SpO_2 Specification A-5
A.6.3 Nellcor SpO_2 Specification A-6
A.7 NIBP Specification A-6
A.8 TEMP Specification A-7

B EMC B-1

C Alarm Messages and Prompt Information C-1
C.1 Physiological Alarm Messages C-1
C.2 Technical Alarm Messages C-1
C.2.1 General Alarm Messages of Parameter Modules C-2
C.2.2 NIBP Module Alarm Messages C-2
C.2.3 Mindray DS SpO_2 Module Alarm Messages C-4
C.2.4 Masimo SpO_2 Module Alarm Messages C-5
C.2.5 Nellcor SpO_2 Module Alarm Messages C-7
C.2.6 SmarTemp™ TEMP Module Alarm Messages C-8
C.2.7 Recorder Module Alarm Messages C-9
C.2.8 System Alarm Messages C-11
C.3 Prompt Messages C-12

D Factory Defaults D-1
D.1 Patient Information D-1
D.2 System Setup D-2
D.3 Alarm Limit D-3

E Symbols and Abbreviation E-1
E.1 Units E-1
E.2 Symbols E-2
E.3 Abbreviations E-3

1 Safety

1.1 Safety Information

The safety statements presented in this chapter refer to the basic safety information that the operator shall pay attention to and abide by. There are additional safety statements in other chapters or sections, which may be the same as or similar to the followings, or specific to the operations.

⚠ WARNING

- **Indicates a potential hazard or unsafe practice that, if not avoided, could result in death or serious injury.**

⚠ CAUTION

- **Indicates a potential hazard or unsafe practice that, if not avoided, could result in minor personal injury or product/property damage.**

NOTE

- **Provides application tips or other useful information to ensure that you get the most from your product.**

1.1.1 Warnings

⚠WARNING

- **This monitor is not applicable for prolonged and continuous SpO_2 monitoring, which may increase the risks of irritation and burns at the site of the sensor.**
- **This monitor is not applicable for prolonged and continuous temperature monitoring for more than 5 minutes.**
- **This monitor is intended for use by qualified clinical physicians or well-trained nurses in the specified places.**
- **It is your responsibility to verify the device and accessories can function safely and normally before use**
- **The disposable accessories should be disposed of in accordance with the hospital regulations.**
- **A possible fire or explosion hazard exists when used in the presence of flammable anesthetics or other flammable or explosive substances in combination with air, oxygen-enriched environments, or nitrous oxide.**
- **Do not rely exclusively on the audible alarm system for patient monitoring. Adjustment of alarm volume to a low level or off may result in a hazard to the patient. Remember that alarm settings should be customized according to different patient situations and always keeping the patient under close surveillance is the most reliable way for safe patient monitoring.**
- **Opening the monitor housing presents a risk of hazard due to electrical shock. All servicing and future upgrades to this equipment must be carried out by personnel trained and authorized by Mindray DS only.**
- **Do not touch the patient or equipment connected to the patient during defibrillation. A risk of serious injury or death is present.**
- **When using the equipment with electrosurgical units (ESU), make sure the patient is safe.**
- **Dispose of the package material according to the applicable waste control regulations and keep it out of children's reach.**
- **The device must be connected to a properly installed power outlet with protective earth contacts only. If the installation does not provide for a protective earth conductor, disconnect the monitor from the power line and operate it on battery power, if possible.**

1.1.2 Cautions

⚠CAUTION

- **To ensure patient safety, use only parts and accessories specified in this manual.**
- **Remove the battery from the monitor if it will not be used or not be connected to the power line for a long period.**
- **Carefully route patient cabling to reduce the possibility of patient entanglement or strangulation.**
- **Disposable devices are intended for single use only. They should not be reused as performance could degrade or contamination could occur.**
- **At the end of its service life, the product described in this manual, as well as its accessories, must be disposed of in compliance with the guidelines regulating the disposal of such products. If you have any questions concerning disposal of the products, please contact with us.**
- **Magnetic and electrical fields are capable of interfering with the proper performance of the device. For this reason make sure that all external devices operated in the vicinity of the monitor comply with the relevant EMC requirements. Mobile phone, X-ray equipment or MRI devices are a possible source of interference as they may emit higher levels of electromagnetic radiation.**
- **Before connecting this monitor to the power line, check that the voltage and frequency ratings of the power line are the same as those indicated on the label or in this manual.**
- **Install or carry the monitor properly to avoid damages caused by drop, impact, strong vibration or other mechanical force.**
- **If you spill liquid on the equipment or accessories, contact us or your service personnel.**

1.1.3 Notes

NOTES

- **Put the equipment in a location where you can easily see the screen and access the operating controls.**
- **This monitor complies with the requirements of CISPR11 (EN55011) class A.**
- **The software was developed per IEC60601-1-4. The possibility of hazards arising from program errors is minimized.**
- **Put the monitor in a location where you can easily see the screen and access the operating controls.**
- **The instructions of this manual are based on the maximum configuration. Some of them may not apply to your monitor.**
- **Devices connected the RS232 port shall be Mindray DS -specified only.**

1.2 Equipment Symbols

	Caution: Consult accompanying documents (this manual).		Up
	Power ON/OFF	OK	Selection
	Alternating current (AC)		Down
	Battery indicator		Pulse Rate (PR)
	Defibrillation-proof type CF applied part		Neonate
	NIBP		Pediatric/Child
	PATIENT INFO.		Adult
	MENU		Equipotential grounding

	SET ALARMS		NurseCall output
	DISPLAY		RS-232 connector
	INTERVAL		Date of manufacture
EC REP	European community representative		Manufacturer
	RECORD	SN	Serial number
	Alarm Silenced		Network connector

Classified by Underwriters Laboratories Inc. with respect to electric shock, fire and mechanical hazards, only in accordance with UL 60601-1,
CAN/CSA C22.2 NO.601-1, IEC 60601-1-1, IEC 60601-2-30,
IEC 60601-2-49.

The following definition of the WEEE label applies to EU member states only. This symbol indicates that this product should not be treated as household waste. By ensuring that this product is disposed of correctly, you will help prevent bringing potential negative consequences to the environment and human health. For more detailed information with regard to returning and recycling this product, please consult the distributor from whom you purchased it.

* For system products, this label may be attached to the main unit only.

FOR YOUR NOTES

2 The Basics

2.1 Monitor Description

2.1.1 Intended Use

This device is to monitor physiologic parameters, including SpO_2, PR, NIBP and TEMP, on adult, pediatric, and neonatal patients in healthcare facilities by clinical physicians or appropriate medical staff under the direction of physicians. It is not intended for transport or home use.

⚠ WARNING

- **This device is to be operated by clinical physicians or appropriate medical staffs under the direction of physicians. The operator of the monitor must be well tranined. Any operation by unauthorized or non-tranined personnel is forbidden.**
- **The physiological parameters and the alarm information displayed by the monitor are only for the reference of physicians, but cannot be used directly to determine the clinical treatment.**

⚠ CAUTION

- **The environment and power supply of this monitor must meet the requirements specified in A Product Specifications.**

2.1.2 Contraindications

None

2.1.3 Components

This monitor is composed of a main unit, NIBP cuff, SpO_2 sensor and TEMP probe. Note that some of the mentioned parts are optional and may not be found in your monitor.

2.1.4 Functions

This monitor has the following functions and features:

- SpO_2 measurement: pulse oxygen saturation (SpO_2), pulse rate (PR), and SpO_2 plethysmogram.
- NIBP measurement: systolic pressure (S), diastolic pressure (D), mean pressure (M), and pulse rate (PR).
- TEMP measurement: temperature (TEMP).
- Alarm: support visual/audible alarms and prompt messages.
- Record: support the function of recording NIBP trend data and PLETH waveform.
- Patient ID input by bar code scanning.
- Nurse call.
- Storage of trend data: support the function of storing up to 1200 groups of measured results.
- Powerful system menu.
- Large LED digit display.
- Adjustable LCD brightness and contrast.
- Network communication: support the function of being connected to the CMS or PC for data output or upgrade.
- Rechargeable lead-acid battery or lithium battery.

2.2 Appearance

2.2.1 Front Panel

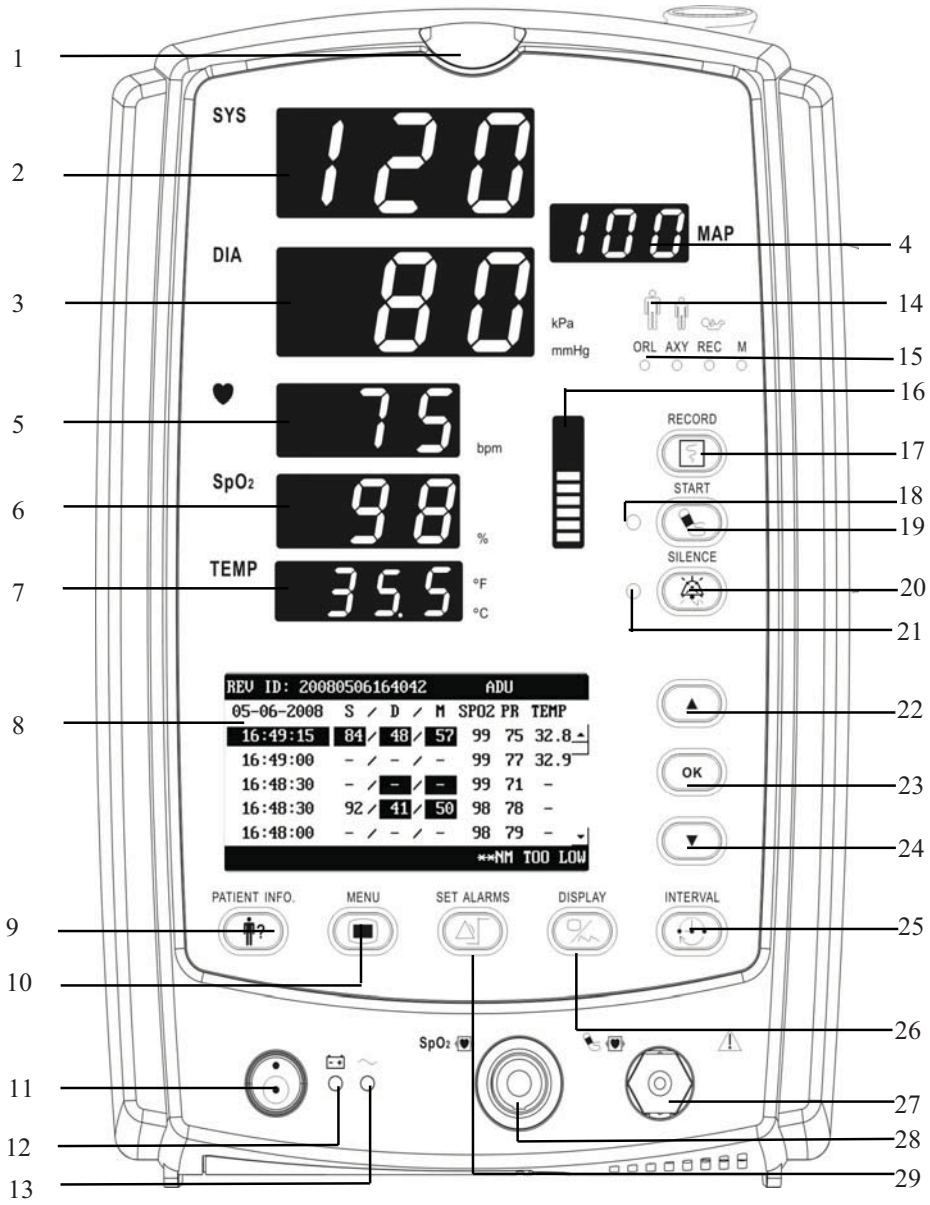

Figure 2-1 Front Panel

1. Alarm indicator

   The alarm indicator of this monitor is in compliance with the requirement of EN60825-1 A11 Class 1 for LED. The LED indicator varies its flash color and frequency to indicate different alarm levels. For details, refer to ***5.2.1 Alarm Lamp.***

2. SYS

   This LED displays the systolic pressure reading in the NIBP measurement.

3. DIA

   This LED displays the diastolic pressure reading in the NIBP measurement. At the right side of the NIBP reading, it is the NIBP unit: kPa or mmHg. The illuminating one is the unit selected. NIBP unit can be set in the system setup menu

4. MAP

   This LED displays the mean pressure reading in the NIBP measurement.

5. PR

   This LED displays the PR value in the NIBP measurement or SpO_2 measurement, with the unit (bpm) on the right.

6. SpO_2

   This LED displays the SpO_2 value, with the unit (%) on the right.

7. TEMP

   This LED displays the temperature reading. At the right side of the TEMP reading, it is the TEMP unit: ℃ or ℉. The one illuminates is the unit selected. TEMP unit can be set in the system setup menu.

8. LCD

   The LCD displays menus, trend data and PLETH waveforms, etc.

9. PATIENT INFO.

   Press this key to set patient information.

10. MENU

    Press this key to switch between the SYSTEM SETUP menu and the Normal screen.

11. Power On/Off, standby, working status indicator

    Press this key to power on/off the monitor and to enter/exit the standby state. To power off the monitor, press and hold this key for more than 2 seconds.

    Inside this key is a working status indicator:

    - ON: It indicates that the monitor is powered on;
    - OFF: It indicates that the monitor is powered off.

12. Battery indicator

    It indicates the status of the battery. For details, refer to ***2.4 Battery***.

13. AC power indicator

    - ON: It indicates that the AC power is applied to the monitor;
    - OFF: It indicates that the monitor is not applied to the monitor.

14. Patient type indicator

    It indicates the patient types: respectively adult, pediatric and neonate from left to right.

15. Temperature site and mode indicator

    It indicates the temperature measurement site and monitoring mode: respectively oral, axillary, rectal and monitor.

16. Pulse strength indicator

    It indicates the pulse strength of a patient.

17. RECORD

    Press this key to start or stop the recording.

18. NIBP status indicator

    - ON: It indicates that the monitor is performing the NIBP measurement;
    - OFF: It indicates that the monitor is not performing the NIBP measurement.

19. NIBP

    Press this key to start an NIBP measurement, or press this key during measurement to stop it.

20. SILENCE

    Shortly pressing this key pauses the current alarm for 2 minutes. Pressing and holding this key for more than 2 seconds disables audible alarms, thus entering the alarm silenced mode. During alarm silenced, the system will return to the normal status when a new alarm occurs.

21. Silence indicator

    - OFF: normal status; in this status, when an alarm occurs, the system can give an audible alarm according to the alarm level;
    - ON: alarm silenced status; in this status, the system cannot give audible alarm.
    - FLASH: alarm paused status; in this status, the system cannot give the audible and visual alarm.

22. Up

    Press this key to move the cursor upward.

23. OK

    Press this key to select the highlighted option. In the trend view, pressing this key pops up the REVIEW SETUP menu.

24. Down

    Press this key to move the cursor down.

25. INTERVAL

    Press this key to switch between the INTERVAL menu and the Normal screen.

26. DISPLAY

    Press this key to switch between the normal screen and trend view.

27. NIBP cuff connector

    This connector is used to connect the NIBP cuff to the monitor.

28. SpO_2 sensor connector

    This connector is used to connect the SpO_2 sensor to the monitor.

29. SET ALARMS

    Press this key to switch between the SET ALARMS menu and the Normal screen.

2.2.2 Rear Panel

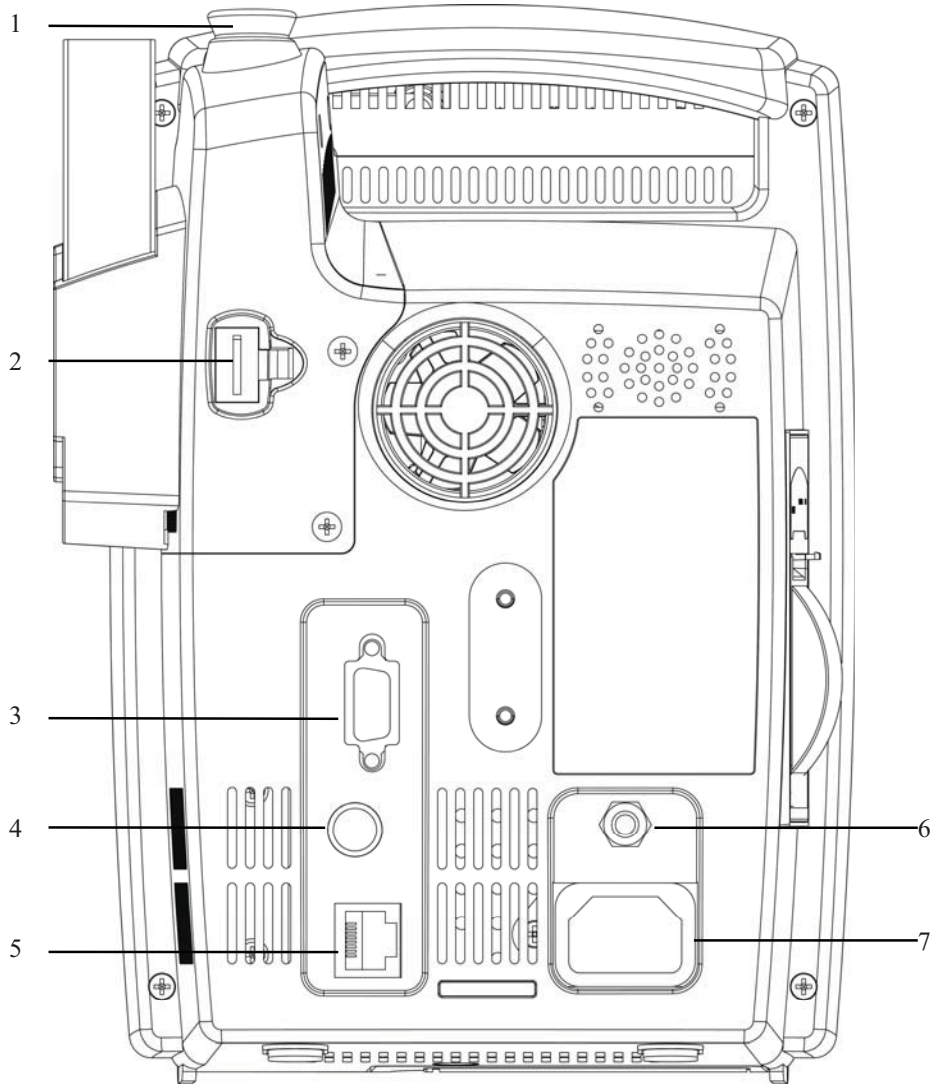

Figure 2-2 Rear Panel

1. TEMP probe sheath
2. TEMP probe connector
3. RS-232 connector:: used to connect the bar code scanner.
4. Nurse call connector: used to connect the monitor to the hospital's nurse call system.
5. Network connector: used to connect the monitor to the CMS or PC.
6. Equipotential grounding connector: connects the equipotential grounding connectors of other devices.
7. AC power input connector: used to connect the monitor to the AC power through a 3-core power cable.

2.2.3 Recorder

The recorder is on the left side of the monitor. See the following figure.

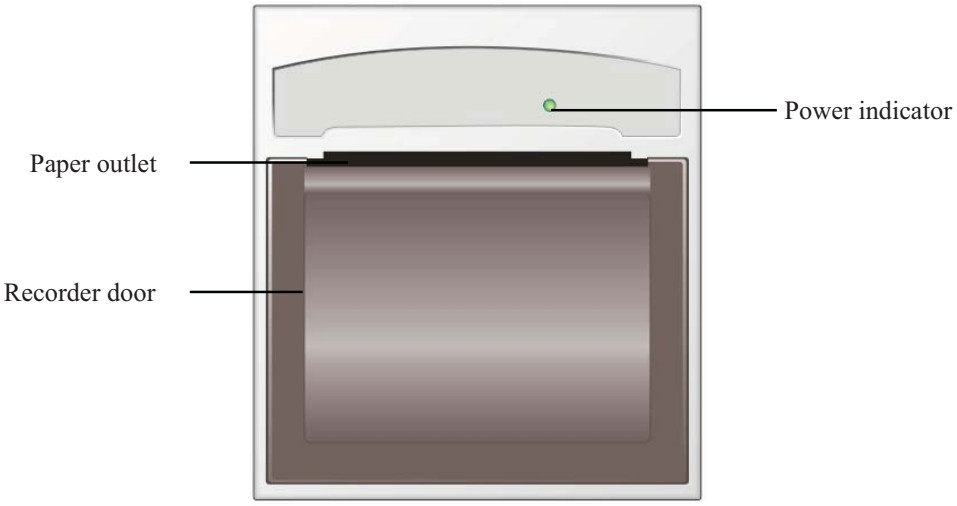

Figure 2-3 Recorder

For details about the recorder, refer to ***6 Recording***

.

2.3 Display

Figure 2-4 Display

This monitor adopts the LCD display. It is able to display the following three parts:

1. Patient information area

   This area displays patient ID, patient category and alarm status symbol.

2. PLETH wave/NIBP timing area

   This area displays the PLETH wave and/or NIBP timing.

3. Alarm information area

   On the left of this area is the technical alarm message or prompt message. If there are multiple messages, they will be displayed circularly.

On the right of this area are the physiological alarm message and the current system time.

2.3.1 Cursor

In menus or trend data view, when the cursor moves to an option or a data, the background of the option or the data becomes black and the texts turn white. You can press ▲ or ▼ to move the cursor, and press OK to confirm the selection.

NOTE

- **▲ and ▼ are used to move the cursor, and OK is used for selection.**

2.4 Battery

Rechargeable batteries can be used to supply power to the monitor where AC mains is unavailable or whenever the power supply is interrupted. The battery is charged automatically when the monitor is connected to AC mains till it is full. If the power supply is lost during monitoring, the monitor can run on internal battery.

The battery indicator indicates the status of the battery.

- ON: The battery is being charged or the battery is fully charged.
- OFF: The battery is removed from the monitor, or the monitor is equipped with battery but is not connected to AC mains and not turned on.
- Flashes: The monitor is powered by the internal battery.

The capacity of the internal battery is limited. When the battery capacity is too low, a high level alarm is triggered and the “Battery too low” message is given in the technical alarms area. At this moment, the AC mains shall be applied to the monitor; otherwise the monitor will power off automatically before the battery is depleted.

For details about installation of the battery, refer to ***3.1.5 Installation Method:Installing the battery.***

⚠WARNING

- **Keep the battery out of the reach of children.**
- **Use only the battery specified by the manufacturer.**

NOTE

- **Remove the battery before transport, or if the monitor is not likely to be used for an extended period of time.**

2.4.1 Battery Maintenance

2.4.1.1 Conditioning a Battery

A battery needs at least two conditioning cycles when it is used for the first time. A battery conditioning cycle is one uninterrupted charge of the battery, followed by an uninterrupted discharge of the battery. Batteries should be conditioned regularly to maintain their useful life. Condition a battery once when it is used or stored for two months, or when its run time becomes noticeably shorter.

To condition a battery, follow this procedure:

1. Disconnect the monitor from the patient and stop all monitoring or measuring.
2. Insert the battery in need of conditioning in the battery compartment of the monitor.
3. Apply AC power to the monitor and allow the battery to charge uninterruptedly for 10 hours.
4. Remove AC power and allow the monitor to run on the battery until it shuts off.
5. Apply AC power again to the monitor and allow the battery to charge uninterruptedly for 10 hours.

This battery is now conditioned and the monitor can be returned to service.

2.4.1.2 Checking a Battery

The performance of a rechargeable battery may deteriorate over time. To check the performance of a battery, follow this procedure:

1. Disconnect the monitor from the patient and stop all monitoring or measuring.
2. Apply AC power to the monitor and allow the battery to charge uninterruptedly for 10 hours.
3. Remove AC power and allow the monitor to run on the battery until it shuts off.
4. The operating time of battery reflects its performance directly.

If the oprating time of the battery is noticeable shorter than that stated in the specifications, replace it or contact your service personnel,

NOTE

- **Life expectancy of a battery depends on how frequent and how long it is used. For a properly maintained and stored lead-acid or lithium ion battery, its life expectancy is about 2 or 3 years respectively. For more aggressive use models, life expectancy can be less. We recommend replacing lead acid batteries every 2 years and lithium ion batteries every 3 years.**
- **The operating time depends on the configuration and operation. For example, measuring NIBP more frequently will also shorten the operating time.**

2.4.2 Battery Recycling

When a battery has visual signs of damage, or no longer holds a charge, it should be replaced. Remove the old battery from the monitor and recycle it properly. To dispose of the batteries, follow local laws for proper disposal.

⚠WARNING

- **Do not disassemble batteries, or dispose of them in fire, or cause them to short circuit. They may ignite, explode, leak or heat up, causing personal injury.**

3 Installation and Maintenance

3.1 Installation

⚠WARNING

- **The installation of the monitor must be carried out by personnel we authorize. The software copyright of the monitor is solely owned by our company. Any action to change, copy or exchange the software by any organization or person is regarded as copyright infringement and is not allowed.**

3.1.1 Unpacking and Checking

Before unpacking, examine the packing case carefully for signs of damage. If any damage is detected, contact the carrier or our company.

If the packing case is intact, open the package and remove the instrument and accessories carefully. Check all materials against the packing list and check for any mechanical damage. Contact our Customer Service Department for any problem.

NOTE

- **Please save the packing case and packaging material for future transport and storage.**

⚠WARNING

- **Dispose of the packaging material accordint to applicable waste control regulations and keep it out of children's reach.**
- **The equipment might be contaminated in storage, transport or when used. Verify the package and the single use accessories are intact. In case of any damage, do not apply it to patients.**

3.1.2 Environmental Requirements

The operating environment of the monitor must meet the requirements specified in the section ***A.2 Environmental Specifications***

The environment where this monitor is to be used should be free from noise, vibration, dust, and corrosive or explosive and inflammable substances. For a cabinet mounted installation, allow sufficient room at the front and the rear of the cabinet for operation, maintenance and servicing. Besides, allow at least 2 inches clearance around the instrument for proper air circulation.

Condensation can form when the monitor is moved from one location to another, and being exposed to differences in humidity or temperature. Make sure that during operation the instrument is free from condensation.

3.1.3 Power Supply Requirements

The power applied to the monitor must meet the requirements specified in Section ***A.3 Power Requirements***

⚠WARNING

- **Make sure that the operating environment and the power applied to the monitor comply with the specified requirements. Otherwise its performance might not meet the specifications claimed in *AProduct Specifications*, and unexpected results, such as damages to the monitor, may be incurred.**
- **The monitor shall be powered according to the requirement for the system power voltage. Otherwise, serious damage might be caused to the system.**

3.1.4 Bracket Mounting

For details, please refer to the corresponding instructions for use of bracket mounting

3.1.5 Installation Method

⚠WARNING

- **Equipments connected to this monitor must be certified according to the respective IEC standards (e.g. IEC 60950 for information technology equipment and IEC 60601-1 for medical electrical equipment). Furthermore all configurations shall comply with the valid version of IEC 60601-1-1. Any person who connects additional equipment to the signal input or signal output is responsible to ensure the system complies with the requirements of the valid version of IEC 60601-1-1. If in doubt, contact our company or customer service.**
- **If the monitor is connected to another electrical instrument and the instrument specifications cannot tell whether the instrument combination is hazardous (e.g. due to summation of leakage currents), you should consult us or experts in the field to ensure the required safety of all instruments concerned.**

NOTE

- **The following operations are not all required. User-customized installation by authorized personnel is provided.**

3.1.5.1 Connecting to AC mains

1. Use the original 3-core power cable.
2. Connect the power cable to the AC mains input connector on the rear panel of the monitor.
3. Connect the other end of the power cable to a compatible 3-prong hospital grade AC power outlet.

The 3-prong power outlet must be grounded. In case of any doubt, contact related personnel of the hospital.

⚠WARNING

- **Do not use three-wire to two-wire adapter with this instrument.**
- **To avoid unexpected power interruption, do no use power outlet with a wall-mounted switch control.**

3.1.5.2 Installing the battery

The battery compartment is located at the bottom of the patient monitor. Follow the steps given below to install the battery.

1. Push the compartment door in the marked direction to open the door.
2. Flip the battery stopper to the left, as Figure 3-1 shows.
3. Follow the marked polarity to insert the battery into the compartment, as Figure 3-2 shows.
4. Push the battery to the bottom and flip the stopper back to the original position, as Figure 3-3 shows.
5. Close the battery door.

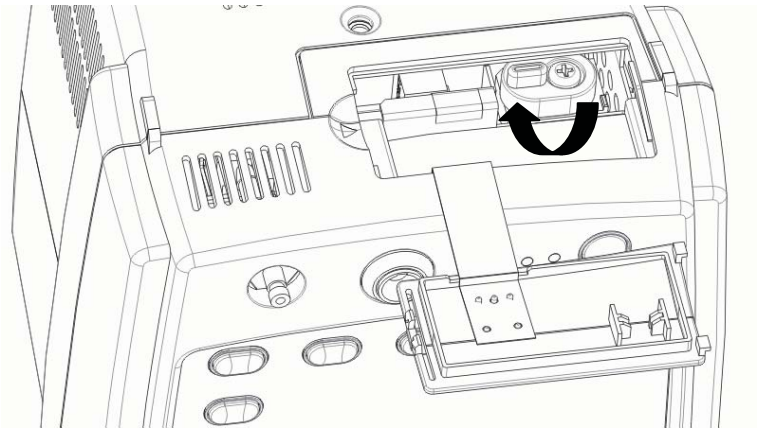

Figure 3-1

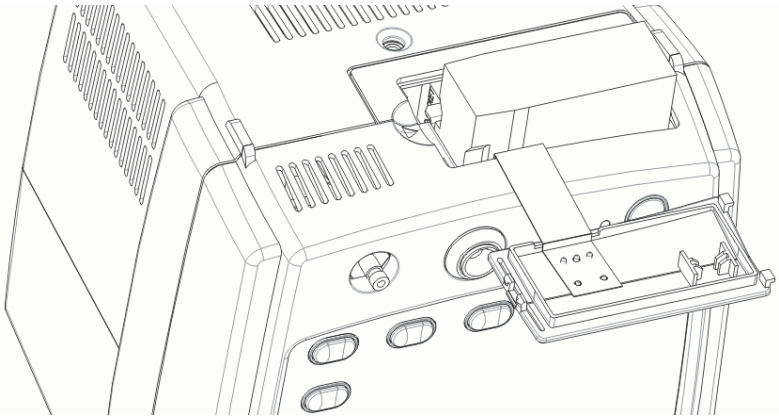

Figure 3-2

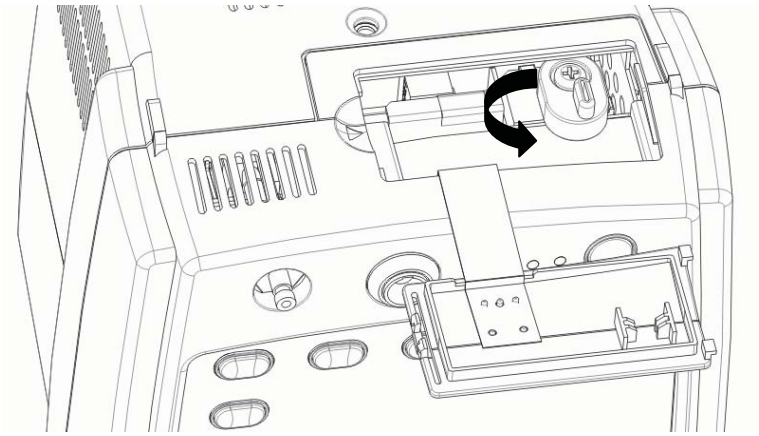

Figure 3-3

NOTE

- **Be sure to charge the battery after a long-term storage or when you find the battery energy is low. A low-energy battery may not provide enough power to start the patient monitor.**
- **To charge the battery, connect the AC power to the monitor. The battery will be charged regardless the monitor is on or off.**

3.1.5.3 Equipotential Grounding

When other equipment is used together with the monitor, a grounding cable should be used to connect the equipotential grounding connectors of the monitor and other equipment. This helps to eliminate the potential differences between different equipment, and ensure the safety of the operator and patient.

⚠WARNING

- **If the grounding system is in doubt, the monitor shall run on its internal battery.**

3.1.5.4 Connecting the accessories

Connect the necessary accessories to the monitor. For details, see the chapters for specific parameter monitoring in the following pages, or corresponding instructions for the accessories.

3.1.5.5 Connecting the network cable

The network connector of the monitor is a standard RJ45 connector. It connects the monitor with the specified central monitoring system, or with a PC for software upgrade and data export. To connect the monitor with CMS or PC,

1. Connect one end of the network cable to the network connector of the monitor.
2. Connect the other end of the network cable to the hub of the central monitoring system, or to the network connector of a PC.

⚠WARNING

- **Upgrading the system through network is only to be executed by personnel we authorize.**

3.1.5.6 Nurse call connector

The nurse call connector is used for the nurse call function. If connected to the hospital's nurse call system through a special nurse call cable, the monitor can generate nurse call signals when an alarm occurs. The output end of the nurse call cable consists of two free cords that is neutral. The nurse call system shall be installed by the maintenance engineer from the manufacturer or the engineer of the hospital.

3.1.5.7 Connecting the Bar Code Scanner

The bar code scanner shall be connected to the RS232 connector. Use only bar code scanners supplied by us.

3.1.6 Powering on the Monitor

After installing the monitor, please power on it in the following procedure:

1. Before using the monitor, please carry out corresponding safety inspection in accordance with Section ***3.2.1Inspection***.
2. Press the Power Switch on the control panel. A beep will be heard.
3. The system starts self-test and the start-up screen will be displayed.
4. Several seconds later, the system finishes the self-test and displays the Normal screen.
5. Then you can operate the monitor through the control panel.

When AC mains is connected, the battery will be charged regardless the monitor is on or off.

3.1.7 Powering off the Monitor

To power off the monitor, please follow the procedures below:

1. Confirm the patient monitoring is to be finished.
2. Disconnect the cables and sensors between the monitor and the patient.
3. Confirm whether to store or clear the patient monitoring data.
4. Press the Power switch and hold it for more than 2 seconds to power off the monitor.

3.2 Maintenance

⚠WARNING

- **Failure to implement a satisfactory maintenance schedule may cause undue equipment failure and possible health hazards.**
- **The safety inspection before equipment disassembly or the servicing of the equipment must be performed by professional servicing personnel. Otherwise, equipment failure and possible health hazard may be caused.**

3.2.1 Inspection

Make sure the qualified service personnel have implemented a complete inspection before putting the monitor into operation, after monitor servicing or system upgrading, or after the monitor has been used for 6-12 consecutive months. This is to ensure the normal operation of the system.

Check that

- The environment and the power supply meet the specified requirements.
- The monitor surface is free from stains.
- The monitor surface, keys, connectors and accessories have no signs of physical damage.
- The power cords are not worn and the insulation is in good performance.
- The grounding cables are properly connected.
- Only specified accessories are applied.
- The monitor clock is correct.
- The audible and visual alarms are normal.
- The recorder functions normally and the recorder paper meets the requirement.
- The monitoring functions of the system are in good performance.

In case of any damage or exception, do not use the monitor. Contact the biomedical engineers of the hospital or our Customer Service immediately.

3.2.2 Cleaning

⚠WARNING

- **Be sure to shut down the system and disconnect all power cords from the outlet before cleaning the equipment.**

Your equipment should be cleaned regularly. If there is heavy pollution or lots of dust and sand in your place, the equipment should be cleaned more frequently. Before cleaning the equipment, consult your hospital's regulations for cleaning, disinfecting and sterilizing equipment.

The exterior surfaces of the equipment may be cleaned with a clean and soft cloth, sponge or cotton ball, dampened with a non-erosive cleaning solution. Drying off excess cleaning solution before cleaning the equipment is recommended. Following are examples of cleaning solutions:

- Diluted soap water
- Diluted ammonia water
- Diluted sodium hypochlorite (bleaching agent)
- Diluted formaldehyde (35 to 37%)
- Hydrogen peroxide (3%)
- Ethanol (70%), or Isopropanol (70%)

NOTE

- **The sodium hypochlorite of the concentration ranging from 500ppm (1:100 diluted bleaching agent for home use) to 5000ppm (1:10 diluted bleaching agent for home use) is effective. The required concentration depends on the quantity of the organic substances (such as blood, mucus) on the equipment surface.**

To avoid damage to the equipment, please follow these rules:

- ALWAYS dilute the solutions according to the manufacturer's suggestions.
- ALWAYS wipe off all the excess cleaning solution with a dry cloth after cleaning.
- NEVER submerge the equipment into water or any cleaning solution, or pour or spray water or any cleaning solution on the equipment.
- NEVER permit fluids run into the casing, switches, connectors, or any ventilation openings in the equipment.
- NEVER use abrasive or erosive cleaners of any kind as well as cleaners containing acetone.

⚠CAUTION

- **Failure to follow these rules may erode or fray the casing, or blur lettering on the labels, or cause equipment failures.**

For cleaning information of accessories, please refer to the chapters for specific patient parameters and the instructions for use of the accessories.

3.2.3 Disinfection

⚠WARNING

- **Disinfection may cause damage to the equipment; therefore, when preparing to disinfect the equipment, consult your hospital's infection controllers or professionals.**
- **The cleaning solutions above can only be used for general cleaning. If you use them to control infections, we shall assume no responsibility for the effectiveness.**

Disinfection may cause damage to the equipment. We recommend the sterilization and disinfection are contained in the hospital's servicing schedule only when necessary. The equipment should be cleaned prior to sterilization and disinfection.

Recommended sterilization material: Alcohol based (Ethanol 70%, Isopropanol 70%), and aldehyde based.

⚠CAUTION

- **ALWAYS dilute the solutions according to the manufacturer's suggestions and adopt lower concentration if possible.**
- **NEVER submerge the equipment into water or any solution, or pour water or any solution on the equipment.**
- **ALWAYS wipe off all the excess liquids on the equipment surface and accessory surface with a dry cloth.**
- **NEVER use EtO and undiluted formaldehyde to disinfect the equipment.**
- **Never permit high-pressure and high-temperature disinfection of the equipment and accessories.**

4 Menus and Screens

4.1 Patient Information

The figure shows the PATIENT INFORMATION menu.

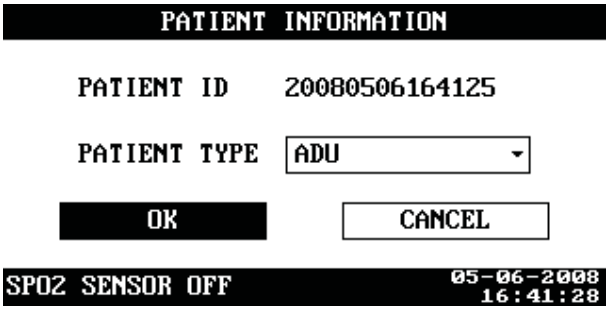

Figure 4-1

In the PATIENT INFORMATION menu, you can set:

- PATIENT ID: The system automatically creates a patient ID each time the monitor is turned on. You can also:

  - ◆ Input a patient ID by scanning the bar code:

  In the event BARCODE POWER is switched on, you can scan the bar code information using a bar code scanner. The PATIENT INFORMATION menu pops up if the bar code is sucessfully identified. You can admit the patient using the current bar code by selecting OK. You can also keep the original patient ID by selecting CANCEL.

  - ◆ Input a patient ID by pressing the PATIENT INFO button:

  In the event QUICK ADMIT is switched on, pressing opens the PATIENT INFORMATION menu. The system creates a patient ID according to the current time and admits the patient using this patient ID. You can also keep the original patient ID by selecting CANCEL.

  To switch on/off QUICK ADMIT, select SYSTEM SETUP→MAINTAIN.

  - ◆ Keep patient ID unchanged:

  If patient ID is not input by bar code scanning or by pressing PATIENT INFO button, or the bar code scanner fails to identify the bar code, the system will keep original patient ID unchanged.

- PATIENT TYPE: You can set patient type to ADU, PED or NEO.

NOTE

- **The system automatically creates a patient ID each time the monitor is turned on.**
- **Select appropriate patient type each time a patient is admitted.**
- **If you need to change patient type after the patient has been admitted, switch off QUICK ADMIT; press and then change PATIENT TYPE in the pop-up PATIENT INFORMATION menu.**
- **If you need to admit a patient in the event both BARCODE POWER and QUICK ADMIT are set to OFF, switch either of them on.**

4.2 System Setup

By pressing on the front panel of the monitor, you can open the SYSTEM SETUP menu as shown in Figure 4-2.

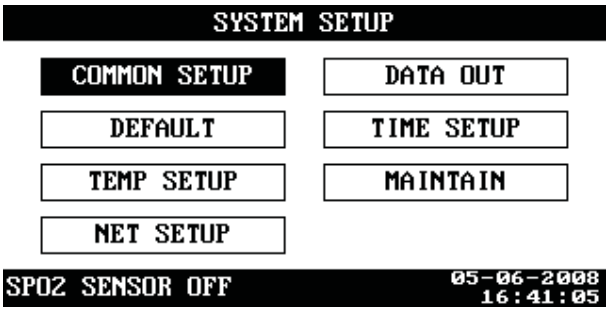

Figure 4-2

4.2.1 Common Setup

In the SYSTEM SETUP menu, select COMMON SETUP. In the COMMON SETUP menu, you can set the following items.

■ ALARM VOL MIN ALARM VOL to 10

In the following circumstance, the setting of ALARM VOL may be lower than the setting of MIN ALARM VOL. In this case, ALARM VOL is automatically adjusted according to MIN ALARM VOL.

◆ Select SYSTEM SETUP→MAINTAIN→USER MAINTAIN; enter required password; and then change MIN ALARM VOL in the pop-up menu.

- Select SYSTEM SETUP→DEFAULT; and then select LOAD FACTORY CONFIG or LOAD USER CONFIG in the pop-up menu;
- Restart the monitor after turning it off for more than 120s;
- Change patient ID;
- Change patient type.

- KEY VOL 0 to 10
- PULSE VOL 0 to 10
- LCD BRIGHT 1 to 10
- LCD CONTRAST 1 to 10
- NIBP UNIT mmHg, kPa

When the key volume or pulse volume is set to 0, it indicates that the key tone or pulse tone is disabled.

4.2.2 Network Setup

In the SYSTEM SETUP menu, select NET SETUP. In the NET SETUP menu, you can set the following items.

- NET TYPE: CMS, CMS+
- LOCAL NET NO.:It indicates the bed number of a monitor in the monitoring network. If the NET TYPE is CMS, the LOCAL NET NO can be set between 1 and 64; if the NET TYPE is CMS+, it can not be set.
- IP ADDRESS SETUP: When the monitor is connected with the central monitoring system, and the NET TYPE is CMS+, you can set the IP address for your monitor .

The network type and local net No. are related to the central monitoring system (CMS) to which the monitor is connected. Contact the CMS technical personnel for any doubt.

⚠WARNING

- **This monitor is intended for use only by clinical professionals or under their guidance. It must only be used by persons who have received adequate training in its use. Anyone unauthorized or untrained must not perform any operation on it.**

4.2.3 Time Setup

In the SYSTEM SETUP menu, select TIME SETUP. In the TIME SETUP menu, you can set the following items.

1. DATE FORMAT: You can set DATE FORMAT to any of the following formats:
   - ◆ YY-MM-DD
   - ◆ MM-DD-YY
   - ◆ DD-MM-YY
2. System time: you can set the year, month, day, hour and minute respectively as required.

4.2.4 User Maintenance

Select SYSTEM SETUP→MAINTAIN→USER MAINTAIN; enter required password. You can set the following items in the pop-up menu:

- ■ MIN ALARM VOL: 0 to 10
- ■ BARCODE POWER: You can toggle BARCODE POWER between ON and OFF. You can set it to OFF if bar code scanner is not used for a prolonged time.
- ■ SPO2 SENSOR OFF: You can set the alarm level of SPO2 SENSOR OFF to HIGH, MED, LOW or OFF.
- ■ AUDIO OFF PROMPT: You can toggle AUDIO OFF PROMPT between ON and OFF. If you switch it on, the monitor clanks at an interval of one minute. The volume level of prompt tone is 2.
- ■ LANGUAGE: You can select a desired language for user interface.
- ■ SAVE USER CONFIG: You can save the current configuration as user configuration.
- ■ SELECT CONFIG: You can select LAST CONFIG, USER CONFIG or FACTORY CONFIG as desired.

4.2.5 Nurse Call Setup

Select SYSTEM SETUP→MAINTAIN→NURSE CALL. You can set the following items in the pop-up menu:

- SIGNAL DURATION

1. CONTINUUM

   It indicates that the nurse call signal duration is the same with the alarm duration, namely, the nurse call signal lasts from the beginning of the alarm to the end of the alarm.

2. PULSE

   It indicates that the nurse call signal is a pulse signal whose duration is 1s. When multiple alarms occur, the monitor outputs only one pulse signal; if another alarm occurs before the current alarm is cleared, the monitor will output another pulse signal.

- SIGNAL TYPE

1. NORMAL CLOSE: set the signal type to NORMAL CLOSE when the nurse call system of the hospital is set to normally-closed;
2. NORMAL OPEN: set the signal type to NORMAL OPEN when the nurse call system of the hospital is set to normally-open.

NORMAL CLOSE and NORMAL OPEN are technical terms which describe the type of relay in nurse call system. The hospitals should select the right signal type consistent with their nurse call system.

- ALM LEV: HIGH, MED, LOW; check box
- ALM TYPE: TECH, PHYS; check box.

The system will send the nurse call signal according to the selected alarm level and alarm type. If neither alarm level nor alarm type is selected, the system will not send any nurse call signal when alarms occur.
The Nurse Call function doesn't distinguish among ALM LEV and ALM TYPE. As long as any type is checked and when the alarmable event occurs, the monitor will send the same signal to the interface of the Nurse Call System.

NOTE

- **The medical/nursing staff are not expected to take the nurse call function as the major alarm notification. The patient conditions should be determined based on the audible/visual alarm of the monitor and the clinical symptoms of the patient.**
- **In the Alarm Paused or Standby State, the nurse call function will be disabled.**

⚠ WARNING

- **Then nurse call settings shall not be changed by non-medical staff.**

4.2.6 Version

Select SYSTEM SETUP→MAINTAIN→VERSION, you can view information on the monitor's hardware version and software version.

4.2.7 Configuration

4.2.7.1 Presetting Configuration

If the monitor is turned off for less than 60 seconds, last configuration will be loaded automatically when it is restarted. If it has been turned off for more than 120 seconds, different configuration will be loaded according to the setting when it is restarted, or when patient type or patient ID is changed.

1. Select SYSTEM SETUP→MAINTAIN→USER MAINTAIN; enter required password to enter the USER MAINTAIN menu.
2. Select SELECT CONFIG.
3. Select LAST CONFIG, USER CONFIG or FACTORY CONFIG as desired.
4. Select OK.

NOTE

- **When the monitor is restarted after being turned off for 60 to 120 seconds, the configuration loaded may be last configuration, user configuration or factory configuration**

4.2.7.2 Saving User Configuration

1. Make sure the modification you make is appropriate and correct.
2. Select SYSTEM SETUP→MAINTAIN→USER MAINTAIN; enter required password to enter the USER MAINTAIN menu.
3. Select SAVE USER CONFIG.

4.2.7.3 Resuming Default Configuration

In actual applications, the operator may change some settings. However, these changes may not always be appropriate or correct, particularly for a newly admitted patient. The monitor has the function of loading factory configuration so that you can resume the factory default configuration as desired. You can also load the saved user configuration.

1. In the SYSTEM SETUP menu, select DEFAULT.
2. Select LOAD FACTORY CONFIG or LOAD USER CONFIG.
3. Select OK in the pop-up menu.

4.2.8 Exporting Data

To export data to a PC,

1. Ensure that the monitor is connected to a PC; run the Patient Review System software on the PC.
2. In the SYSTEM SETUP menu of the monitor, select DATA OUT.
3. If the connection is available, the data (including patient ID, patient type and trend data of all the patients) will be export to the PC. For more information, please refer to the help information of the Patient Review System software.

4.3 Normal Screen

You can enter the Normal screen by pressing .

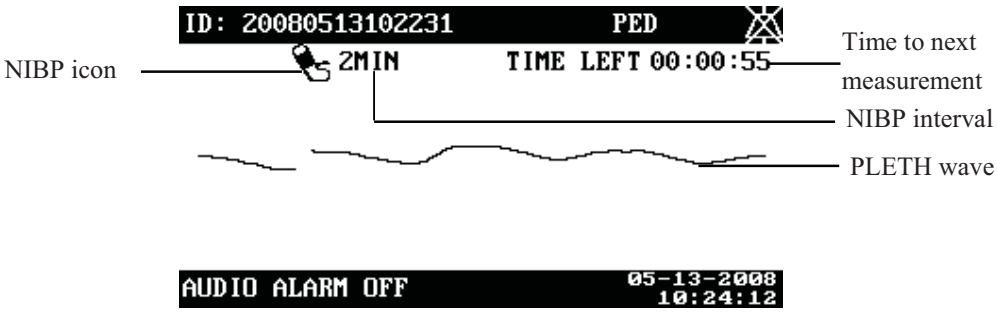

Figure 4-3

4.4 Trend Screen

The Trend screen displays systolic pressure (S), diastolic pressure (D) and mean pressure (M), SpO_2, PR and TEMP, as shown in the figure below. Up to 1200 groups of data can be stored.

The monitor stores trend data in either of the following modes:

- For SpO_2 and TEMP values in monitor mode, the trend data is sampled value. The time interval of sampling is 30 seconds. Additionally, the last value obtained before the "SENSOR OFF" or "TEMP SENSOR OFF" alarm occurs will also be stored.
- For NIBP and TEMP values obtained in predict mode, the trend data is the actual value measured when the data is sampled.

NOTE

- **If the difference between the time when two storage modes happen is less than one second, the trends displayed may be of the same time, but SpO2 trends and/or TEMP trends in monitor mode may be different.**

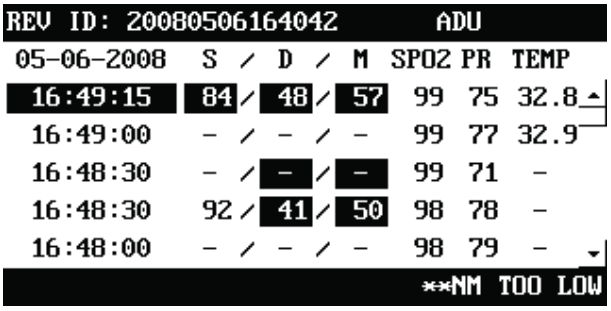

Figure 4-4

Press to enter the REVIEW SETUP menu where you can change:

- REVIEW ID: Select the patient ID you want to review.
- REVIEW MODE: You can set REVIEW MODE to ALL, NIBP EVENTS or TEMP EVENTS. If you select ALL, all the trend data of the selected patient will be displayed. If you select NIBP EVENTS, the trend data which includes all NIBP measurements of the selected patient will be displayed. If you select TEMP EVENTS, the trend data which includes all TEMP measurements of the selected patient will be displayed.
- DELETE: By selecting DELETE, you can toggle between CURRENT ITEM, ITEMS OF CURRENT ID, or ITEMS OF ALL ID. Then select OK to respectively delete the current trend data, all trend data of current ID, or data of all ID.

4.5 Standby State

4.5.1 Entering the Standby State

To enter the Standby state, press for less than 2 seconds and then select OK in the CONFIRM STANDBY STATE dialog box.

4.5.2 Exiting the Standby State

In the Standby state, press any key on the front panel of the monitor. The EXIT STANDBY dialog box appears. Select YES to exit the Standby state. If no operation is done within 30 seconds, the monitor will automatically select NO, this dialog box will disappear, and the monitor will keep in the Standby state.
In the following circumstance,

- The monitor presents a prompt to ask if you want to exit the Standby mode when a button is pressed.
- The monitor exits the Standby mode when a bar code scanner is used to identify patient ID.
- The monitor exits the Standby mode automatically after continuously receiving SpO_2 signal for 5 seconds.
- The monitor exits the Standby mode automatically when the TEMP probe is withdrawn from the probe sheath.
- In the case that the monitor runs on internal battery, the monitor exits the Standby mode and presents an alarm “BAT. VOLTAGE LOW” when the battery power is low.

4.6 Patient Review System Software

The monitor can be configured with the optional patient review system software (hereafter called PrsView software) to implement the following functions:

- Exporting data;
- Viewing exported data;
- Editing patient information; and
- Printing data.

Refer to PrsView software instructions for installation and help information for detailed software instructions for use.

FOR YOUR NOTES

5 Alarms

5.1 Overview

The monitor gives audible or visual alarms to indicate the medical staff when a vital sign of the patient appears abnormal, or mechanical or electrical problems occur to the monitor.

⚠WARNING

- **A potential hazard can exist if different alarm presets are used for the same or similar equipment in any single area, e.g. an intensive care unit or cardiac operating room.**

NOTE

- **For details about alarm setup of this monitor, please refer to *5.5 Setting Alarms*.**

5.1.1 Alarm Categories

By nature, the alarms are divided into three categories: physiological alarms, technical alarms and prompt information.

1. Physiological alarms

A physiological alarm either indicates that a monitored physiological parameter goes beyond specified limits or indicates an abnormal patient condition. For example, no pulse is detected.

2. Technical alarms

A technical alarm indicates that the monitor or parts of the monitor is not capable of accurately monitoring the patient's condition due to improper operation or system failure. Technical alarms are also referred to as system error messages. For example, an error occurs during module initialization.

3. Prompt information

As a matter of fact, prompt messages are not alarm messages. They are usually information relating to the system status, but not concerning vital signs of patients. For example, the monitor prompts "REC INITIALIZING".

5.1.2 Alarm Levels

By severity, the alarms of this monitor are divided into three priority levels: high level alarms, medium level alarms and low level alarms.

1. High level alarms

- The patient is in danger and requires emergency treatment, or
- A serious technical problem occurs to the monitor, such as an error in the NIBP module self-test.

2. Medium level alarms

- The patient's vital signs appears abnormal and an immediate treatment is required, or
- A specific technical problem occurs to the monitor, such as the leakage in the NIBP hose.

3. Low level alarms

- A specific technical problem occurs to the monitor, for example, the SpO_2 signal is too weak during the measurement.

The levels of some technical and physiological alarms are predefined before the monitor leaves the factory and cannot be changed.
For all physiological alarms, technical alarms and prompt information, refer to ***C Alarm Messages and Prompt Information.***

5.2 Alarm Indications

When an alarm occurs, the monitor indicates it to the user through the following audible or visual indications:

- Visual alarms
- Audible alarms
- Alarm messages

The alarm indications are presented in different ways to match the alarm levels.

5.2.1 Alarm Lamp

When an alarm occurs, the alarm lamp on the front panel of the monitor flashes in different color and frequency to match the alarm levels as follows:

- High level alarms: the lamp quickly flashes red.
- Medium level alarms: the lamp slowly flashes yellow.
- Low level alarms: the lamp turns yellow without flashing.

5.2.2 Audible Alarms

The monitor uses different alarm tone patterns to indicate different alarm levels.

- High level alarm: “DO-DO-DO--DO-DO---DO-DO-DO--DO-DO”.
- Medium level alarm: “DO-DO-DO”.
- Low level alarm: “DO”.

Different intervals correspond to different alarm levels: High level alarm phonates once every 6.2 or 11 seconds. Medium level alarm phonates once every 15 or 25 seconds. Low level alarm phonates once every 25 seconds.

5.2.3 Alarm Messages

When alarms occur, the alarm messages are displayed in the physiological or technical alarm area in black. Asterisks before the alarm messages matches the alarm level as follows:

- High level alarms: triple asterisks “***”
- Medium level alarms: dual asterisks “**”
- Low level alarms: single asterisk “*”

5.3 Alarm Status

Apart from the aforementioned alarm indicators, the patient monitor still uses symbols to indicate the alarm status: You can set alarms to the following status as desired:

- Audio off: is displayed at the right side of patient information area and a prompt message “AUDIO ALARM OFF” appears at the right side of the alarm information area.
- Physiological Alarm off: is displayed at the right side of patient information area and a prompt message “ALARM OFF” appears at the right side of the alarm information area.
- Alarm paused: is displayed at the right side of patient information area ; a prompt message “ALARM PAUSE” and remaining alarm pause time appear at the right side of the alarm information area.
- Alarm silenced: is displayed at the right side of patient information area.

5.3.1 Audio Off

To switch off alarm tones, follow this procedure:

1. Select SYSTEM SETUP→MAINTAIN→USER MAINTAIN; enter required password and set MIN ALARM VOL to 0 in the pop-up menu.
2. Select SYSTEM SETUP→COMMON SETUP; set ALMAR VOL to 0 in the pop-up menu. Thus alarm tones are switched off.

If AUDIO OFF PROMPT in the USER MAINTAIN menu is set to ON, the monitor clanks at an interval of one minute. The volume level of prompt tone is 2.

The monitor automatically exit the audio off status when:

- ALARM VOL is manually changed to a level other than 0;
- The monitor is restarted after being turned off for more than 120s, or when patient ID or patient type is changed in the case it is preset to load factory configuration or user configuration at startup.
- LOAD FACTORY CONFIG or LOAD USER CONFIG is selected in the DEFAULT menu.

⚠WARNING

- **If alarm tones are switched off, the monitor does not give audible alarm signal even if new alarms occur. So take care when you switch off alarm tones.**

5.3.2 Physiological Alarm Off

If alarms related to a parameter are switched off, the monitor does not generate alarms even if the measured parameter values exceed the alarm limit. This status is called Alarms Off.

To disable the alarms of a parameter, you need to open SET ALARMS menu .Take NIBP (Non-Invasive Blood Pressure) as an example.

1. Press to open the SET ALARMS menu.
2. Move the cursor to the pane to the right of SYS ALM.
3. Select OFF and the NIBP alarms are disabled.

NOTE

- **Within 30s after the NIBP, SPO2 and TEMP modules are loaded, physiological and technical alarms related to these modules are switched off automatically.**

5.3.3 Alarms Paused

Shortly pressing for less than 2 seconds can pause all alarms for 2 minutes. When alarms are paused,

- Alarm lamp flashing and alarm tones are suspended.
- For a physiological alarm, alarm message is not displayed.
- For a technical alarm, alarm message is displayed if Alarm lamp flashing and alarm tones can be cleared.
- For a technical alarm, alarm message is not displayed if all alarm indications can be cleared completely.
- The remaining alarm pause time is shown at the right side fo alarm information area.

In the alarm paused status,

- All alarm indications are disabled when a new physiological alarm occurs.
- Alarm lamp flashing and alarm tone are disabled and only alarm message is displayed when a new technical alarm occurs.

The monitor automatically exits the alarm paused status when the alarm pause time expires.

You can also press to manually leave the larm paused status.

5.3.4 Alarm Silenced

You can silence alarms by press and hold for more than 2 seconds. In the alarm silenced status, alarm indications except alarm tones operate properly. The monitor automatically exits the alarm silenced status if a new technical or physiological alarm occurs.

5.3.5 Status Switchover

1. In the normal status,

- Press for less than 2 seconds to switch the monitor to the Alarms Paused status, or
- Press for 2 seconds or more to switch the monitor to the Alarms silenced status.

2. In the alarm paused status,

- Press for less than 2 seconds to switch the monitor to the normal status, or
- Press for 2 seconds or more to switch the monitor to the Alarms silenced status.

3. In the alarm silenced status,

- Press for less than 2 seconds to switch the monitor to the Alarms Paused status, or
- Press for 2 seconds or more to switch the monitor to the normal status.

5.4 Clearing Alarm Indications

1. Clearing alarm light flashing and alarm tones

For some technical alarms, the alarm lamp flashing and alarm tones are cleared and the alarm messages change to prompt messages during and after the alarm paused period if is pressed for less than 2 seconds. If the technical alarm is triggered again after the monitor restores to the normal status, the monitor will give alarm indications as normal. For technical alarms whose alarm light flashing and alarm tones can be cleared, refer to ***C Alarm Messages and Prompt Information.***

2. Clearing all alarm indications

For some other technical alarms, all alarm indications are cleared during and after the alarm paused period if is pressed for less than 2 seconds. If the technical alarm is triggered again after the monitor restores to the normal status, the monitor will give alarm indications as normal.

5.5 Setting Alarms

By pressing , you can enter the SET ALARMS menu to set NIBP and SpO2 alarm switches and change alarm limits.

You can switch on or off NIBP-related physiological alarms by selecting the pane to the right of SYS ALM and toggling between ON and OFF. You can switch on or off physiological alarms related to SpO_2 and PR by selecting the pane to the right of SPO2 ALM and toggling between ON and OFF.

To adjust alarm limits, move the cursor respectively to HI and LO and select a desired value by pressing , and .

When any of the pressure values exceeds the alarm limits, an alarm will be triggered. The ranges of NIBP limits is listed below:

Patient type	**Adult**	**Pediatric**	**Neonate**
Sys	40 to 270 mmHg	40 to 200 mmHg	40 to 135 mmHg
Map	20 to 230 mmHg	20 to 165 mmHg	20 to 110 mmHg
Dia	10 to 210 mmHg	10 to 150 mmHg	10 to 100 mmHg

When any of the SpO_2 or PR values exceeds the alarm limits, an alarm will be triggered. The ranges of SpO_2 and PR limits are listed below:

SpO_2 module	**SpO_2**	**PR**
Mindray DS SpO_2	0 to 100%	0 to 254 bpm
Masimo SpO_2	0 to 100%	25 to 240 bpm
Nellcor SpO_2	0 to 100%	20 to 250 bpm

5.6 SpO_2 Sensor Off Alarm

Select SYSTEM SETUP→MAINTAIN→USER MAINTAIN; enter required password and set SPO2 SENSOR OFF to HIGH, MED, LOW or OFF in the pop-up menu. When the alarm level of SPO2 SENSOR OFF is set to OFF, all alarm indications related to this alarm is disabled.

5.7 When an Alarm Occurs

⚠WARNING

- **When an alarm occurs, always check the patient's condition first.**

When an alarm occurs to the monitor, refer to the following steps and take action properly.

1. Check the patient's condition.
2. Identify the alarming parameter and the alarm category.
3. Identify the cause of the alarm.
4. Take proper action to eliminate the alarm condition.
5. Make sure the alarm condition is corrected.

NOTE

- **For details about how to deal with specific alarms, refer to C Alarm Messages and Prompt Information.**

6 Recording

6.1 Overview

A thermal recorder can be installed on the left side panel of the monitor to print:

- Real-time PLETH waveform.
- Currently displayed trend data.
- All trend data of the current patient.

6.2 Using the Recorder

6.2.1 Printing Real-time PLETH waveform

1. Press to enter the PLETH screen.
2. Press for less than 2 seconds to print the currently displayed PLETH waveform.

6.2.2 Printing Currently Displayed Trend Data

1. Enter the Trend screen.
2. Press for less than 2 seconds to print the currently displayed trend data.

6.2.3 Printing All Trend Data of the Current Patient

1. Enter the Trend screen.
2. Press for 2 seconds or more to print all trend data of the current patient.

NOTE

- **You can stop printing at any time by pressing .**
- **For information on recorder status and corresponding handling measures, refer to C Alarm Messages and Prompt Information.**

6.3 Loading Paper

1. Press the latch at the upper right of the recorder door to open the door.
2. Lift the roller lever located at the upper left of the recorder as shown in the following figure.
3. Install a new roll of paper into the compartment as shown below. The roller scrolls automatically to send the paper out of the compartment.
4. Push down the roller lever.
5. Close the recorder door.

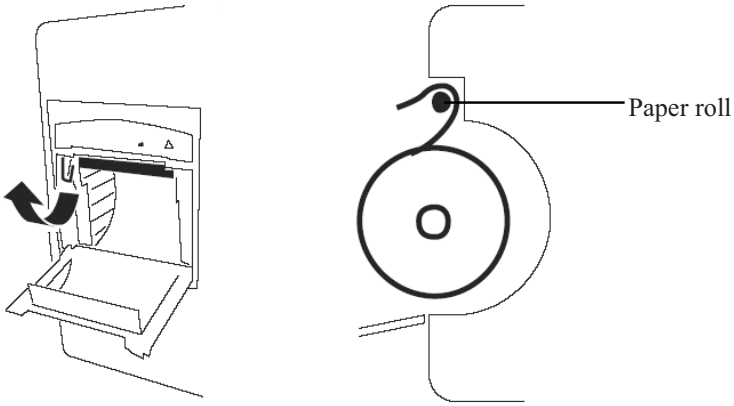

Figure 6-1 Installing Recording Paper

⚠CAUTION

- **Use only specified thermal paper. Otherwise, it may cause damage to the recorder's printhead, the recorder may be unable to print, or poor print quality may result.**
- **Never pull the recorder paper with force when the printing is in process. Otherwise, it may cause damage to the recorder.**
- **Do not leave the recorder door open except when you are replacing the paper or removing a fault.**

6.4 Removing Paper Jam

If the recorder works improperly or produces unusual sound, check whether there is a paper jam. If yes, remove it following this procedure:

1. Open the recorder door.
2. Take out the jammed paper and tear off the draped part.
3. Lift the lever on the upper left of the recorder.
4. Draw out the paper from the paper inlet.
5. Reload the paper and close the recorder door.

FOR YOUR NOTES

7 SpO_2 Monitoring

This monitor can be equipped with any of the following SpO_2 modules:

- Mindray DS SpO_2 module
- Masimo SpO_2 module
- Nellcor SpO_2 module.

A monitor, equipped with a Masimo or Nellcor SpO_2 module, is marked by “Masimo SET” or “Nellcor” at the lower left corner of the front panel. The following pages respectively gives introduction to the above three SpO_2 modules. Please read this chapter according to your monitor configuration before operation.

7.1 Introduction

SpO_2 monitoring is a non-invasive technique used to measure the amount of oxygenated haemoglobin and pulse rate by measuring the absorption of selected wavelengths of light. The light generated in the probe passes through the tissue and is converted into electrical signals by the photodetector in the probe. The SpO_2 module processes the electrical signal and displays a waveform and digital values for SpO_2 and pulse rate.

This device is calibrated to display functional oxygen saturation. It provides four measurements:

1. PLETH waveform (PLETH): visual indication of patient’s pulse. The waveform is normalized.
2. Oxygen saturation of arterial blood (SpO_2): percentage of oxygenated hemoglobin in relation to the sum of oxyhemoglobin and deoxyhemoglobin.
3. Perfusion indicator: the pulsatile portion of the measured signal caused by arterial pulsation.
4. Pulse rate (derived from pleth wave): detected pulsations per minute.

7.2 Safety

⚠ WARNING

- **Use only SpO_2 sensors specified in this manual. Follow the SpO_2 sensor's instructions for use and adhere to all warnings and cautions.**
- **When a trend toward patient deoxygenation is indicated, blood samples should be analyzed by a co-oximeter to completely understand the patient's condition.**
- **Do not use SpO_2 sensors during magnetic resonance imaging (MRI). Induced current could potentially cause burns. The sensor may affect the MRI image, and the MRI unit may affect the accuracy of the oximetry measurements.**
- **Prolonged continuous monitoring may increase the risk of undesirable changes in skin characteristics, such as irritation, reddening, blistering or burns. Inspect the sensor site every two hours and move the sensor if the skin quality changes. For neonates, or patients with poor peripheral blood circulation or sensitive skin, inspect the sensor site more frequently.**
- **Check if the sensor is in normal condition before monitoring. Do not use the SpO_2 sensor once the package or the sensor is found damaged.**
- **After unplugging the SpO_2 sensor cable from the connector of the monitor, the system shall display the alarm message "SPO2 SENSOR OFF" and give the audible alarm.**
- **ES (Electrosurgery) equipment wire and SpO_2 cable must not be tangled up.**
- **Do not apply the sensor on a limb with an intravenous infusion or arterial catheter in place.**
- **Do not perform SpO_2 monitoring and NIBP measurements on the same limb simultaneously. Obstruction of blood flow during NIBP measurements may adversely affect the SpO_2 reading.**
- **Measure the monitor's leakage current whenever an external device is connected to the serial port. Leakage current must not exceed 100 mA.**
- **To ensure patient electrical isolation, connect only to other equipment with electronically isolated circuits.**
- **Do not connect the monitor to a mains outlet with a wall switch or dimmer.**
- **Interfering Substances, such as carboxyhemoglobin, may erroneously increase SpO_2 readings. The level of increase is approximately equal to the amount of carboxyhemoglobin. Dyes, or any substance containing dyes, that change usual arterial pigmentation may also cause the increase of SpO_2 readings.**

NOTE

- **Place the SpO_2 sensor cable along the backside of patient's hand. Make sure the fingernail is just opposite to the light emitted from the sensor.**
- **SpO_2 waveform amplitude is not proportional to the pulse strength.**
- **SpO_2 value is not proportional to the pulse rate.**

7.3 Monitoring Procedure

1. Power on the monitor.
2. Remove colored nail polish from the application site.
3. Apply the sensor to the patient.
4. Plug the connector of the sensor extension cable into the SpO_2 connector on the monitor.

7.4 Measurement Limitations

If you doubt the measured SpO2, check patient vital signs first. Then check the patient monitor and SpO2 sensor. The following factors may influence the accuracy of measurement:

- Ambient light
- Physical movement (patient and imposed motion)
- Diagnostic testing
- Low perfusion
- Electromagnetic interference, such as MRI environment
- Electrosurgical units
- Dysfunctional haemoglobin, such as carboxyhemoglobin (COHb)and methemoglobin (MetHb)
- Presence of certain dyes, such as methylene and indigo carmine
- Inappropriate positioning of the SpO2 sensor, or use of incorrect SpO2 sensor
- Drop of arterial blood flow to immeaurable level caused by shock, anemia, low temperature or vasoconstrictor.

The absorption of oxyhemoglobin (HbO_2) and deoxyhemoglobin to the light of special wavelength may also affect the accuracy of the SpO_2 measurement. In the presence of other substances (such as carbon hemoglobin, methemoglobin, methylene blue and indigo carmine) that absorb the light of the same wavelengths, false or low SpO_2 readings may result.

7.5 Masimo Information

The MASIMO SET® Product

■ Masimo Patents

This device is covered under one or more of the following U.S.A. patents: 5,758,644, 5,823,950, 6,011,986, 6,157,850, 6,263,222, 6,501,975, 7,469,157 and other applicable patents listed at www.masimo.com/patents.htm.

■ No Implied License

Possession or purchase of this device does not convey any express or implied license to use the device with unauthorized sensors or cables which would, alone, or in combination with this device, fall within the scope of one or more of the patents relating to this device.

7.6 Nellcor Information

■ Nellcor Patents

This device is covered under one or more the following U.S. Patents: 4,802,486; 4,869,254; 4,928,692; 4,934,372; 4,960,126; 5,078,136; 5,485,847;5,743,263; 5,865,736; 6,035,223; 6,298,252; 6,463,310; 6,591,123; 6,675,031; 6,708,049; 6,801,791; Re.35,122 and international equivalents, U.S.A and international patents pending.

■ No Implied License

Possession or purchase of this device does not convey any express or implied license to use the device with unauthorized replacement parts which would, alone, or in combination with this device, fall within the scope of one or more of the patents relating to this device.

8 NIBP Monitoring

8.1 Overview

The Non-invasive Blood Pressure (NIBP) module measures blood pressure using the oscillometric method. This monitor can be applied to adult, pediatric, and neonatal patients. Three modes of measurement are available:

- Manual: Pressing starts an NIBP measurement manually.
- Auto: NIBP measurement is performed automatically at a preset interval.
- STAT: NIBP measurement is performed continually over a five minute period.

The systolic, mean and diastolic pressure readings are displayed on the monitor. If SpO_2 measurement is not performed, the PR data can be obtained from the NIBP measurement.

⚠WARNING

- **Be sure to select the correct patient category setting for your patient before measurement. Do not apply the higher adult settings for pediatric or neonatal patients. Otherwise it may present a safety hazard.**
- **Do not measure NIBP on patients with sickle-cell disease or any condition where skin damage has occurred or is expected.**
- **Use clinical judgement to determine whether to perform frequent unattended blood pressure measurements on patients with severe blood clotting disorders because of the risk of hematoma in the limb fitted with the cuff.**
- **Do not use the NIBP cuff on a limb with an intravenous infusion or arterial catheter in place. This could cause tissue damage around the catheter when the infusion is slowed or blocked during cuff inflation.**
- **If you doubt the NIBP readings, determines the patient's vital signs by alternative means and then verify that the monitor is working correctly.**

8.2 Monitoring Procedure

To perform NIBP measurement on a patient, follow the procedure below.

1. Power on the monitor.
2. Enter the PATIENT INFORMATION menu to select correct patient type.
3. Plug the air hose in the NIBP connector of the monitor.
4. Apply a cuff of proper size to the upper arm or the thigh of the patient.
5. Connect the cuff with the air hose.
6. Press to start the NIBP measurement.

8.2.1 Cuff Selection and Placement

1. Determine the patient's limb circumference.
2. Select appropriate cuff according to limb circumference.

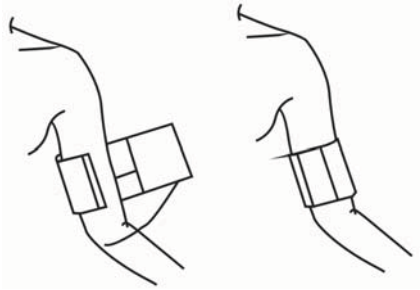

NOTE

- **The width of the cuff should be either 40% of the limb circumference (50% for neonates) or 2/3 of the upper arm length. The inflatable part of the cuff should be long enough to circle 50-80% of the limb. Wrong cuff size may cause erroneous readings. If the cuff size is in question, use a larger cuff.**

3. Ensure that the cuff is completely deflated. Apply the cuff to the patient's upper arm or thigh and make sure the Φ marking on the cuff matches the artery location.
4. Do not wrap the cuff too tightly around the limb. It may cause discoloration, and ischemia of the extremities.

5. Make sure that the cuff edge falls within the marked range. If it does not, use a larger or smaller cuff that will fit better.
6. The limb chosen for taking the NIBP measurement should be placed at the same level as the patient's heart. If this is not possible, use the following method to correct the measurement result:
   - If the cuff is placed higher than the heart level, add 0.75 mmHg (0.10 kPa) to the measured result for each centimeter of difference.
   - If the cuff is placed lower than the heart level, deduct 0.75 mmHg (0.10 kPa) from the measured result for each centimeter of difference.

⚠WARNING

- **Do not use the NIBP cuff on a limb with an intravenous infusion or arterial catheter in place. This could cause tissue damage around the catheter when the infusion is slowed or blocked during cuff inflation.**
- **Make sure the air hose connecting the NIBP cuff and the monitor is not blocked, twisted, or tangled.**

8.2.2 Operation Guides

1. To start a manual NIBP measurement.

■ Press to enter the INTERVAL menu; set INTERVAL to MANUAL; and then press to start a manual NIBP measurement. In this case, a symbol " " is shown on the Normal screen.

■ Directly press to start a manual NIBP measurement between two auto NIBP cycles.

2. To start an Auto NIBP measurement.

Press to enter the INTERVAL menu; set INTERVAL to a desired time (e.g.5MIN); and then press to start the first auto NIBP measurement. The monitor will then automatically repeat NIBP measurements at the preset time interval.

3. To start a STAT NIBP measurement:

Press to enter the INTERVAL menu and then select NIBP STAT to start a 5-minute continuous NIBP measurement.

⚠WARNING

- **Continuous non-invasive blood pressure measurements may cause purpura, ischemia and neuropathy in the limb with the cuff. Inspect the application site regularly to ensure skin quality and inspect the extremity of the cuffed limb for normal color, warmth and sensitivity. If any abnormity occurs, move the cuff to another site or stop the NIBP measurements immediately.**

4. To stop an NIBP measurement

You can stop an NIBP measurement by pressing whenever you are in Manual, Auto or STAT mode.

NOTE

- **If you doubt the NIBP readings, determine the patient's vital signs by alternative means and then verify that the monitor is working correctly.**

8.3 Measurement Limitations

Measurements are impossible with heart rate extremes of less than 40bpm or greater than 240bpm, or if the patient is on a heart-lung machine.

The measurement may be inaccurate or impossible:

- If a regular arterial pressure pulse is hard to detect
- With excessive and continuous patient movement such as shivering or convulsions
- With cardiac arrhythmias
- Rapid blood pressure changes
- Severe shock or hypothermia that reduces blood flow to the peripheries
- Obesity, where a thick layer of fat surrounding a limb dampens the oscillations coming from the artery

8.4 NIBP Reset, Calibration and Test for Air Leakage

8.4.1 Resetting NIBP

If the blood pressure pump works incorrectly but the monitor does not alarm for it, you can check the pump by resetting it. To reset the pump, select SYSTEM SETUP→MAINTAIN→NIBP RESET.

8.4.2 Calibrating NIBP

In SYSTEM SETUP menu, select MAINTAIN and then select NIBP CALIBRATE to start NIBP calibration. Then the button NIBP CALIBRATE changes to STOP CALIBRATE. By selecting STOP CALIBRATE, you can stop the calibration.

Follow this procedure to calibrate the cuff pressure with a calibrated reference manometer (or mercury manometer) with accuracy 1mmHg:

1. Disconnect the NIBP cuff from the monitor and replace it with a metal vessel with capacity 500±25ml.
2. Connect a calibrated reference manometer (with an error less than 0.8 mmHg), a ball pump and a hoses to the monitor, as shown in the figure below:
3. Select NIBP CALIBRATE.
4. Inflate the metal vessel with the ball pump until the reference manometer reads 0, then 50, and finally 200 mmHg.
5. The difference between the indicated pressure of the reference manometer and that of the monitor shall not exceed 3 mmHg. Otherwise, contact Our Customer Service.

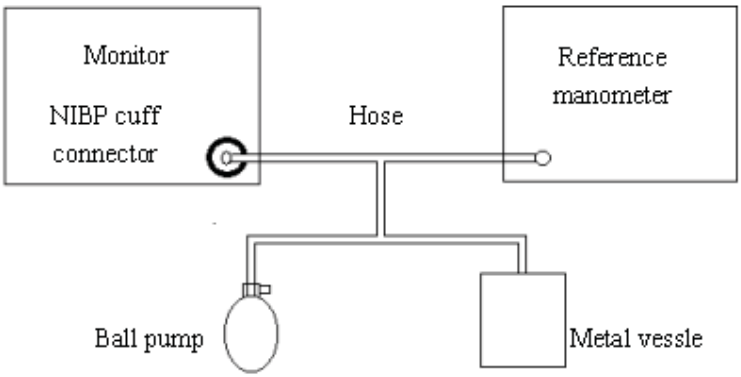

Figure 8-1 NIBP Calibration

NOTE

- **NIBP calibration shall be performed every two years or according to your hospital's protocol.**

8.4.3 NIBP Leakage Test

You can test the pump for air leakage by selecting SYSTEM SETUP→MAINTAIN→NIBP LEAK TEST. With the NIBP cuff connected, you can test the air way for leakage by selecting NIBP LEAK TEST. If the NIBP leakage test is passed, no prompt will be given; If it fails, error information will be displayed in the NIBP parameter area.

To test air leakage, follow the procedure below:

1. Connect the NIBP cuff to the NIBP cuff connector of the monitor.
2. Wrap the cuff around a cylinder of proper size, as shown in the following figure.

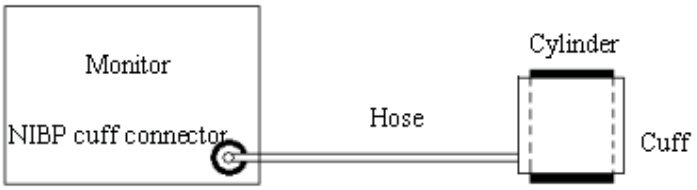

Figure 8-2 NIBP Leakage Test

3. Select NIBP LEAK TEST in the MAINTAIN menu, the message "Pneum testing..." displays in the information area..
4. The cuff automatically deflates in 20s which means NIBP leakage test is completed.
5. If no message appears in the NIBP parameter area, it indicates the airway is in good condition and no air leak exists. However, if the system prompts "PNEUMATIC LEAK", it indicates the airway may have an air leak. In this case, check for loose connections. After confirming that all connections are secure, perform the test again.

If the problem persists, contact our Customer Service.

NOTE

- **The leakage test is intended for use to simply determine whether there are leakages in the NIBP airway. It is not the same as that specified in the EN 1060-3 standard.**

9 TEMP Monitoring

9.1 Overview

The SmarTemp™ TEMP module is intended for monitoring oral, axillary and rectal temperature of adult and pediatric patients and axillary temperature of neonatal patients. Be sure to set correct monitoring mode and position and to select appropriate temperature probe before taking measurement. TEMP TYPE can be set to PREDICT or MONITOR. The default TEMP TYPE is PREDICT.

- PREDICT MODE: In PREDICT mode, the TEMP probe warms up automatically as the probe is withdrawn from the probe sheath. Warming up takes approximately 10s at 25℃ and when it is done, the monitor gives two beeps. Final temperature is obtained in approximately 10s to12s and the monitor gives a beep. Temperature reading remains on the display till the probe is removed from the sheath again. In this mode, if no accurate patient temperature is reached, or after the probe is removed from the sheath for 60s, neither measurement is taken nor the probe is not replaced in its sheath, the monitor automatically enters the MONITOR mode.
- MONITOR MODE: In MONITOR mode, final temperature is reached in 3 to 5 minutes and the temperature reading is continuously shown. In this mode, the monitor does not beep when the final temperature is obtained.

The TEMP reading is display above the LCD.

⚠WARNING

- **The TEMP module shall only be operated under specified environment. When the probe is removed from the probe sheath, the monitor detects the ambient temperature. An auditory alarm will be triggered and the alarm message "ENV TEMP OVERRANGE" will be displayed if the ambient temperature is over range.**
- **For neonatal patient, only axillary temperature can be taken.**
- **Choose appropriate probe according to temperature position. Incorrect probe may result in erroneous measurement.**
- **Prolonged and continuous monitoring beyond 5 minutes is not recommended in any mode.**
- **In PREDICT mode, temperature probe shall be placed to the measured site as soon as probe warmup is completed; otherwise, inaccurate temperature reading may result.**

⚠WARNING

- **In MONITOR mode, the monitor stops measurement after performing measurement for five minutes later and the TEMP reading disappears. Long-time TEMP measurement may cause patient discomfort.**

9.2 Temperature Setup

In the SYSTEM SETUP menu, select TEMP SETUP, you can adjust:

- TEMP TYPE: PREDICT or MONITOR. If MONTIOR is selected, The LED indicating measuring mode on the front panel illuminates.
- TEMP POSITION:: ORAL, AXILLARY or RECTAL. Corresponding indicating lamp on the front panel illuminates if a measurement site is selected.
- TEMP UNIT: ℃ or ℉.

9.3 Monitoring Procedure

9.3.1 TEMP position

The TEMP module can be configured with 2 types of TEMP probe: oral/axillary probe (blue) and rectal probe (red). The blue oral/axillary probe shall only be used with blue probe sheath, while the red rectal probe shall only be used with red sheath. Be sure to select correct probe.

- Oral/axillary probe: This type of probe is intended for taking oral or axillary temperature of adult and pediatric patients, or axillary temperature of neonatal patient.
- Rectal probe: This type of probe is intended for taking rectal temperature of adult and pediatric patient.

9.3.2 Oral Temperature Measurement

Follow the procedure below to measure oral Temperature.

1. Make sure that the oral/axillary probe is connected to the probe connector and the indication lamp beside the temperature unit lights to indicate that TEMP module properly operates.
2. Select desired temperature type (the following procedure taking predict mode as an example) and set TEMP POSITION to ORAL.
3. Unplug the probe from the probe sheath and insert it into a cover in the probe cover box. Press the probe handle down firmly until the cover engages with the probe.
4. After the probe warmingup is ready, apply it under the patient's tongue from either side of the mouth. Verify that the probe reaches the rear sublingual pocket. Have the patient close his/her lips to hold the probe.
5. Hold the probe in place. Make sure that the probe contacts with the patient's oral tissue throughout the measurement.
6. The monitor will give a beep as the temperature measurement is complete. The temperature reading displays continuously.
7. Withdraw the probe from the patient's mouth when accurate temperature reading is obtained. Press firmly the ejection button on the top of the probe to eject the probe cover. Return the probe into the sheath.

Temperature reading displays when final temperature is reached.

9.3.3 Axillary Temperature Measurement

1. Make sure that the oral/axillary probe is connected to the probe connector and the indication lamp beside the temperature unit lights to indicate that TEMP module properly operates.
2. Select desired temperature type (the following procedure taking predict mode as an example) and set TEMP POSITION to AXILLARY.
3. Unplug the probe from the probe sheath and insert it into a cover in the probe cover box. Press the probe handle down firmly until the cover engages with the probe.
4. After probe warmingup is ready, lift the patient's arm to show the entire armpit. Apply the probe as high as possible in the armpit. Check that the probe tip is completely surrounded by the axillary tissue. Lower the patient's arm so that it is tightly placed at the patient side. Keep the patient's arm and the probe in place throughout the measurement.

5. The monitor will give a beep as the temperature measurement is complete. The temperature reading is shown continuously.
6. Withdraw the probe from the patient's armpit when accurate temperature reading is obtained. Press firmly the ejection button on the top of the probe to eject the probe cover. Return the probe into the sheath.

Temperature reading displays when final temperature is reached.

9.3.4 Measuring Rectal Temperature

1. Make sure that the rectal probe is connected to the probe connector and the indication lamp beside the temperature unit lights to indicate that TEMP module properly operates.
2. Select desired temperature type (the following procedure taking predict mode as an example) and set TEMP POSITION to RECTAL.
3. Unplug the probe from the probe sheath and insert it into a cover in the probe cover box. Press the probe handle down firmly until the cover engages with the probe.
4. After probe warmingup is ready, seperate the patient's buttocks with one hand and insert the probe 1.5 cm inside the rectum with the other hand. For pediatric patient, depth of insertion shall be less. Tilt the probe so that it always contacts with patient's tissue. Lubricant can be used in rectal mode.
5. The monitor will give a beep as the temperature measurement is complete. The temperature reading is shown continuously.
6. Withdraw the probe from the patient's rectum when accurate temperature reading is obtained. Press firmly the ejection button on the top of the probe to eject the probe cover. Return the probe into the sheath.

Temperature reading displays when final temperature is reached.

9.3.5 Temperature Measurement in MONITOR Mode

Temperature measurement can be taken in MONITOR mode. The monitor automatically enters the MONITOR mode in the following two cases:

- Accurate temperature is not reached in the PREDICT mode.
- Neither measurement is taken nor the probe is replaced in the probe sheath in 60s after the probe is withdrawn from the sheath.

In MONITOR mode, temperature reading remains on the display as long as the probe is kept at the measurement position and the patient's temperature is within the measuring range. Final temperature value is reached in 3 to 5 minutes, however, the monitor does not beep in this mode.

To measure temperature in the Monitor mode,

1. Make sure that the probe is connected to the probe connector and the indication lamp beside the temperature unit lights to indicate that TEMP module properly operates.
2. Set TEMP TYPE to MONITOR and select appropriate TEMP POSITION.
3. Unplug the probe from the probe sheath and insert it into a cover in the probe cover box. Press the probe handle down firmly until the cover engages with the probe.
4. Apply the probe to the measuring site and take measurement according to the instructions as described in the PREDICT mode.
5. Remain the probe in place for 3 to 5 minutes till accurate measurement is reached.
6. Remove the probe when accurate temperature reading is obtained. Press firmly the ejection button on the top of the probe to eject the probe cover. Return the probe into the sheath.

9.4 Decontamination of the SmarTemp™ TEMP Probe

Use LpH SE Germicidal detergent to decontaminate a probe that has come in contact with a biological material. Apply a small amount of detergent to a disposable wipe (paper based) and wipe down the outside of the probe. Discard the wipe appropriately. After waiting 10 minutes, use a clean dry wipe to dry the probe.

⚠WARNING

- **Perform the decontamination or cleaning process with the unit powered down and power cord removed.**

9.5 Precautions

⚠WARNING

- **Check the probe before taking temperature measurement. The prompt information "TEMP NO PROBE" will be presented and an auditory alarm will be triggered if the TEMP probe is disconnected from the probe connector.**
- **Check the disposable probe cover for damage before using. Never use any probe cover for temperature measurement in case of damage or contamination.**
- **Be careful to avoid damaging the TEMP probe. Replace the TEMP probe in the probe sheath if not in use.**
- **Calibration of the TEMP module is required every two years or according to your hospital's policy. Please contact our Customer Service if calibration is needed.**
- **Only TEMP probes and probe covers supplied by our company shall be used. The use of any other TEMP probe and probe cover may result in erroneous temperature measurements.**
- **Taking temperature without using probe cover or reusing the disposable probe cover may result in cross contamination.**

NOTE

- **TEMP TYPE automatically returns to PREDICT mode when TEMP probe is replaced in the probe sheath.**
- **In the PREDICT mode, please cool the TEMP probe before taking measurement if ambient temperature is higher than 32.5℃.**
- **Patient actions may interfere with oral temperature readings. Ingesting hot or cold liquids, eating food, chewing gum or mints, brushing teeth, smoking, or performing strenuous activities may affect temperature readings for up to 20 minutes after the activity has ended.**
- **Prolonged and continuous monitoring for more than 3 minutes in oral or rectum mode or 5 minute in axillary mode is not recommended.**
- **In the axillary mode, the probe shall directly contact with patient's skin. Measuring through patient's clothes or long-term exposal of patient's armpit to the air may result in inaccurate temperature reading.**
- **In the rectal mode, incorrect probe placement may result in bowel perforation. Washing hands after temperature measurement is complete will significantly reduce the risk of cross infection and nosocomial contamination.**

10 Accessories

⚠WARNING

- **Use specified accessories only. Accessories of other types may cause damage to the monitoror not meet the claimed specifications.**
- **Single-use accessories are not designed to be reused. Reuse may cause a risk of contamination and affect the measurement accuracy.**
- **Check the accessories and their packages for any sign of damage. Do not use them if any damage is detected.**

10.1 SpO_2 Accessories

Extension Cable

Module type	PN
Mindray DS SpO_2 Module	0010-20-42594
Masimo SpO_2 Module	0010-30-42625

SpO_2 Sensor

The SpO_2 sensor material that patients or other staff will come into contact with has undertaken the bio-compatibility test and is verified to be in compliance with ISO 10993-1.

For Mindray DS SpO_2 Module			
Type	**Model**	**Applicable Patient**	**PN**
Single patient	520A	Adult	520A-30-64101
	520P	Pediatric	520P-30-64201
	520I	Infant	520I-30-64301
	520N	Neonate	520N-30-64401

Reusable	518B	Adult, pediatric, neonate (Multi-sites)		518B-30-72107
	512E	Adult (Finger type)		512E-30-90390
	512F			512F-30-28263
	512G	Pediatric (Finger type)		512G-30-90607
	512H			512H-30-79061
For Masimo SpO_2 Module				
Type	**Model**	**Applicable Patient**	**Remark**	**PN**
Reusable	\	Adult (>30 kg)	LNCS DCI	0600-00-0126
	\	Pediatric (10 to 50 kg)	LNCSDCIP	0600-00-0127
Single patient use	\	Adult (>30 kg)	LNCS Adtx	0600-00-0121
	\	Pediatric (10 to 50 kg)	LNCS Pdtx	0600-00-0122
	\	Infant (3 to 20 kg)	LNCS INF-L	0600-00-0124
	\	Neonate (<3 kg and > 40 kg)	LNCS NEO-L	0600-00-0158
	\	Neonate Pre-term (<1kg)	LNCS NEO PT-L	0600-00-0125

Wavelengths emitted by 512F sensor intended for Mindray DS SpO_2 module are red light 660 nm and infrared light 940 nm; wavelengths emitted by other sensors for Mindray DS SpO_2 module are red light 660 nm and infrared light 905 nm;
Wavelength emitted by the sensors intended for Masimo SpO_2 module are red light 660 nm and infrared light 940 nm.
The maximum photic output consumption of the sensor is less than 18 mW.
The information about the wavelength range and maximum photic output consumption can be especially useful to clinicians, for example, clinicians performing photodynamic therapy.

10.2 NIBP Accessories

Tubing

Type	Applicable Patient	PN
Reusable	Adult, pediatric	509B-30-06259
	Neonate	509B-30-06260

Cuff

Type	Model	Applicable Patient	Measurement Site	Limb Circumference (cm)	Bladder Width (cm	PN
Reusable	\	Child	Arm	10 to 19	9.2	0683-15-0001-01
	\	Small Adult		18 to 26	12.2	0683-15-0002-01
	\	Adult		25 to 35	15.1	0683-15-0003-01
	\	Large adult		33 to 47	18.3	0683-15-0004-01
	\	Adult	Thigh	46 to 66	22.5	0683-15-0005-01
	\	Blood Pressure Cuff Starter Kit (Includes one of each: Child, Small Adult, Adult, Large Adult and Thigh cuff)		\	\	0020-00-0184-01
Single patient	CM1500A	Neonate	Arm	3.1 to 5.7	2.2	001B-30-70692
	CM1500B			4.3 to 8.0	2.9	001B-30-70693
	CM1500C			5.8 to 10.9	3.8	001B-30-70694
	CM1500D			7.1 to 13.1	4.8	001B-30-70695
Disposable	\	Child	Arm	10 to 19	7.2	0683-14-0001-01
	\	Small Adult		18 to 26	9.8	0683-14-0002-01
	\	Adult		25 to 35	13.1	0683-14-0003-01
	\	Large adult		33 to 47	16.5	0683-14-0004-01
	\	Adult	Thigh	46 to 66	20.5	0683-14-0005-01

10.3 TEMP Accessories

Description	Measurement Site	PN
TEMP probe	oral/axillary	6006-30-39598
	rectal	6006-30-39599
Probe sheath	oral/axillary	M09A-20-62062
	rectal	M09A-20-62062-51
Disposable probe cover (20 pcs)	/	M09A-20-62124
Disposable probe cover (200 pcs)	/	M09A-30-62126
Disposable probe cover (2000 pcs)	/	M09A-30-62128

10.4 Others

Description	PN
Lithium Ion Battery	M05-010001-06
	0146-00-0099
Data Output Software Package	6006-30-39515
Bedrail Clamp	8000-30-90170
Bar code scanner	0000-10-10767
Nurse call cable	8000-21-10361
Roll stand	0010-30-42945
Thermal Paper, one roll (50mm x 20m)	0683-00-0505-01
Wall-mounting rack	0010-30-42952

A Product Specifications

A.1 Safety Specifications

Item	Specification
Type of protection against electrical shock	Class I; internally/externally powered equipment When integrity of the external protection grounding or grounding cable is doubtable, the equipment must be powered by the internal power (battery).
Degree of protection against electric shock	SpO_2/NIBP/TEMP: CF
Degree of protection against hazards of explosion	Not suitable (ordinary)
Degree of protection against harmful ingress of water	Not suitable (ordinary)
Mode of operation	Continuous
Equipment type	Portable

A.2 Environmental Specifications

Item	Specification
Operating ambient temperature	0 to 40 ºC 10 to 40 ºC (50 to 104 ºF) (SmarTemp™ TEMP module)
Operating relative humidity	15 to 95%, non-condensing
Atmospheric pressure at working condition (operating altitude)	57～107.4KPa 70 to 106 kPa(SmarTemp™ TEMP module)
Storage temperature	-20 to 60 ºC
Storage relative humidity	10 to 95%, non-condensing
atmospheric pressure in Storage (Storage altitude)	16～107.4KPa 50～106KPa(SmarTemp™ TEMP module)

A.3 Power Requirements

Item	Specification
AC mains	
Input voltage	100 to 240V
Input current	0.7 to 0.3A
Frequency	50/60Hz
Battery	
Number of batteries	1
Battery type	Sealed lead-acid battery or lithium-ion battery
Time to shutdown	>5 min (after the first low-power alarm)
Sealed lead-acid battery	
Nominal voltage	12VDC
Battery capacity	2.3Ah
Typical operating time	260min (Using a new, fully charged battery for continuous SpO_2 monitoring and auto NIBP measurements at an interval of 15 minutes at 25℃).
Charge time	A maximum of 8h with monitor operating normally or in standby mode
Lithium-ion battery	
Nominal voltage	11.1VDC
Battery capacity	4.4Ah
Typical operating time	620min (Using a new, fully charged battery for continuous SpO_2 monitoring and auto NIBP measurements at an interval of 15 minutes at 25℃).
Charge time	A maximum of 8h with monitor operating normally or in standby mode

A.4 Hardware Specification

Item	Specification
Size	177×240×170mm (width × height × depth))
Weight	<3.5kg (battery included)
LCD	
Type	Monochrome FSTN
Size	80.3×41.0mm
Resolution	320×160 pixels
7-segment LED Digit Displays	
Groups	6
LED indicating lamp	
Groups	8
Recorder	
Type	Thermal dot array
Horizontal resolution	160dots/cm 25 mm/s (paper speed: 25mm/s)
Vertical resolution	80dots/cm
Paper width	50mm
Paper length	20m
Paper speed	25 mm/s
Number of waveform channels	1
Connectors	
Power supply	1 AC power connector
Nurse call	1
Network	1 standard RJ45 network connector, 100 BASE-TX
Serial port	1 standard RS-232 serial port

A.5 Signal Output

Item	Specification
Applicable standards	Meet the requirements of EC60601-1 for short-circuit protection and leakage current
Nurse call output	
Driving mode	Driven by relay
Electrical specification	≤60W, ≤2A, ≤36VDC, ≤25VAC
Isolation voltage	>1500VAC
Working mode	N/O or N/C (optional)
Sound output	
Speaker	Issues alarm tones (sound pressure 45 to 85 dB), key tones, pulse tones and audible temperature done prompt, supporting Pitch Tone and multiple volume levels. Audible alarm signals meet the requirement of IEC60601-1-8.

A.6 SpO_2 Specification

A.6.1 Mindray DS SpO_2 Specification

All SpO_2 sensors for Mindray DS SpO_2 Module specified in the section 10.1meets the following specifications.

Item	Specification
Measurement validation: The SpO2 accuracy has been validated in human studies against arterial blood sample reference measured with a CO-oximeter. Pulse oximeter measurements are statistically distributed, and only about two-thirds of the measurements can be expected to fall within the specified accuracy compared to CO-oximeter measurements.	
SpO_2	
Measurement range	0 to 100%
Resolution	1%
Accuracy	70% to 100%: (adult/pediatric, in non-motion conditions) 70% to 100%: ±3%(neonate, in non-motion conditions) * 0% to 69%: Undefined
*Studies were performed to validate the accuracy of this monitor with neonatal SpO2 sensors by contrast with a CO-Oximeter. Some neonates aged from 1 day to 30 days with a gestation age of 22 weeks to full term were involved in this study. The statistical analysis of data of this study shows the accuracy (Arms) is within the stated accuracy specification. Please see the following table.	

Sensor type	Totally neonates	Data	Arms
520N	122 (65 male & 57 female)	200 pairs	2.88%
518B	97 (51 male & 46 female)	200 pairs	2.38%
This monitor with neonatal SpO2 sensors was also validated on adult subjects.			
Update period	1s		
Averaging time	7s		
PR			
Measurement range	20 to 254bpm		
Resolution	1bpm		
Accuracy	±3 bpm (in non-motion conditions)		
Update period	1s		
Averaging time	7s		

A.6.2 Masimo SpO_2 Specification

All SpO_2 sensors for Masimo SpO_2 Module specified in the section 10.1meets the following specifications.

Item	Specification
SpO_2	
Measurement range	1 to 100%
Resolution	1%
Accuracy	70% to 100%: ±2% (adult/pediatric, in non-motion conditions) 70 %to 100%: ±3% (neonate, in non-motion conditions) 70 %to 100%: ±3% (in motion conditions) 0 %to 69%: Undefined
Update period	1s
PR	
Measurement range	25 to 240bpm
Resolution	1bpm
Accuracy	±3 bpm (in non-motion conditions) ±5 bpm (in motion conditions)
Update period	1s

A.6.3 Nellcor SpO_2 Specification

Item	Specification		
SpO_2 measurement range and accuracy	Sensor	Range	Accuracy*
	MAX-A, MAX-AL, MAX-N, MAX-P, MAX-I, MAX-FAST	70% to 100% 0% to 69%	±2% Undefined
	OxiCliq A, OxiCliq N, OxiCliq P, OxiCliq I	70 %to 100% 0% to 69%	±2.5% Undefined
	D-YS, DS-100A, OXI-A/N, OXI-P/I	70 %to 100% 0% to 69%	±3% Undefined
	MAX-R, D-YSE, D-YSPD	70% to 100% 0% to 69%	±3.5% Undefined
PR measurement range and accuracy	20 to 250 bpm: ±3 bpm 251 to 300 bpm: Undefined		
Update period	1s		
*: When sensors are used on neonatal patients as recommended, the specified accuracy range is increased by ±1%, to account for the theoretical effect on oximeter measurements of fetal hemoglobin in neonatal blood.			

A.7 NIBP Specification

Item	Specification			
NIBP				
Applicable standards	IEC 60601-2-30, EN 1060-1, EN1060-3, AAMI SP-10			
Method	Oscillometry			
Displayed parameters	Systolic pressure, diastolic pressure and mean pressure, pulse rate			
Mode of operation	Manual, auto and STAT			
Measurement range in normal mode		Adult	Pediatric	Neonate
	Systolic pressure	40 to 270 mmHg	40 to 200 mmHg	40 to 135 mmHg
	Diastolic pressure	10 to 210 mmHg	10 to 150 mmHg	10 to 100 mmHg
	Mean pressure	20 to 230 mmHg	20 to 165 mmHg	20 to 110 mmHg
Accuracy	Maximum average error: ±5mmHg Maximum standard deviation: 8mmHg			

Resolution	1mmHg
Over-pressure protection	Adult: 297±3 mmHg Pediatric: 240±3 mmHg Neonate: 147±3 mmHg
Default initial pressure	Neonate: 67±5 mmHg
PR	
Measurement range	40 to 240bpm
Resolution	1bpm
Accuracy	±3 bpm

A.8 TEMP Specification

Item	Specification
Displayed parameter	TEMP
Measurement range	In MONITOR mode: 25 to 44 ºC (77 to 111.2 ºF)
	In PREDICT mode: 35 to 43 ºC (95 to 109.4 ºF)
Resolution	In MONITOR mode: 0.1 ºC
Accuracy	In MONITOR mode: 25 to 32 ºC (77 to 89.6 ºF): ±0.2 ºC (±0.3 ºF) including 32 ºC (89.6 ºF) In MONITOR mode: 32 to 44 ºC (89.6 to 111.2 ºF): ±0.1ºC (±0.2 ºF)excluding 32 ºC (89.6 ºF)
Typical measurement time	typically 10s to 12s from the moment when temperature “----” displays dynamically

FOR YOUR NOTES

B EMC

The device meets the requirements of IEC60601-1-2.

NOTE

- **Use of accessories, transducers, and cables other than those specified may result in increased emission and/or decreased electromagnetic immunity of the patient monitoring equipment.**
- **The device or its components should not be used adjacent to or stacked with other equipment. and if adjacent or stacked use is necessary, the equipment should be observed to verify normal operation in the configuration in which it will be used.**
- **The equipment needs special precautions regarding EMC and needs to be installed and put into service according to the EMC information provided below.**
- **Other devices may affect this monitor even though they meet the requirements of CISPR.**
- **When the inputted signal is below the minimum amplitude provided in technical specifications, erroneous measurements could result.**
- **Portable and mobile RF communications equipment may affect this equipment.**

Guidance and Declaration - Electromagnetic Emissions		
The device is suitable for use in the electromagnetic environment specified below. The customer or the user of the device should assure that it is used in such an environment.		
Emission tests	**Compliance**	**Electromagnetic environment - guidance**
RF emissions CISPR 11	Group 1	The equipment uses RF energy only for its internal function. Therefore, its RF emissions are very low and are not likely to cause any interference in nearby electronic equipment.
RF emissions CISPR 11	Class A	The equipment is suitable for use in all establishments other than domestic and those directly connected to the public low-voltage power supply network that supplies buildings used for domestic purposes.
Harmonic Emissions IEC61000-3-2	Class A	
Voltage Fluctuations/Flicker Emissions IEC 61000-3-3	Compliance	

Guidance and Declaration - Electromagnetic Immunity			
The device is suitable for use in the electromagnetic environment specified below. The customer or the user of the device should assure that it is used in such an environment.			
Immunity tests	**IEC60601 test level**	**Compliance level**	**Electromagnetic environment - guidance**
Electrostatic discharge (ESD) IEC 61000-4-2	±6 kV contact ±8 kV air	±6 kV contact ±8 kV air	Floors should be wood, concrete or ceramic tile. If floors are covered with synthetic material, the relative humidity should be at least 30%.
Electrical fast transient/burst（EFT） IEC 61000-4-4	±2 kV for power cords ±1 kV for input/output lines (>3 m)	±2 kV for power cords ±1 kV for input/output lines (>3 m)	Mains power quality should be that of a typical commercial or hospital environment.
Surge IEC 61000-4-5	±1 kV differential mode ±2 kV common mode	±1 kV differential mode ±2 kV common mode	
Voltage dips, short interruptions and voltage variations on power supply input lines IEC 61000-4-11	<5% U_T (>95% dip in UT) for 0.5 cycle <40% U_T (>60% dip in UT) for 5 cycle <70% U_T (>30% dip in UT) for 25 cycle <5% U_T (>95% dip in UT) for 5 seconds	<5 % U_T (>95 % dip in U_T) for 0.5 cycle 40 % U_T (60 % dip in U_T) for 5 cycles 70 % U_T (30 % dip in U_T) for 25 cycles <5 % U_T (>95 % dip in U_T) for 5 s	Mains power quality should be that of a typical commercial or hospital environment. If the user of our product requires continued operation during power mains interruptions, it is recommended that our product be powered from an uninterruptible power supply or a battery.
Power frequency magnetic field（50/60Hz） IEC 61000-4-8	3 A/m	3 A/m	Power frequency magnetic fields should be at levels characteristic of a typical location in a typical commercial or hospital environment.
Note: U_T is the A.C. mains voltage prior to application of the test level.			

Guidance and Declaration - Electromagnetic Immunity			
The device is suitable for use in the electromagnetic environment specified below. The customer or the user of the device should assure that it is used in such an environment.			
Immunity tests	**IEC 60601 Test level**	**Compliance level**	**Electromagnetic environment — guidance**
Conduced RF IEC61000-4-6	3 Vrms 150k to 80MHz	3 Vrms	Portable and mobile RF communications equipment should be used no closer to any part of the device, including cables, than the recommended separation distance calculated from the equation applicable to the frequency of the transmitter. Recommended separation distance: $d = 1.2\sqrt{P}$ $d = 1.2\sqrt{P}$ 80M to 800MHz $d = 2.3\sqrt{P}$ 800M to 2.5GHz where P is the maximum output power rating of the transmitter in watts (W) according to the transmitter manufacturer and d is the recommended separation distance in meters (m). Field strengths from fixed RF transmitters, as determined by an electromagnetic site survey, [a] should be less than the compliance level in each frequency range [b] Interference may occur in the vicinity of equipment marked with the following symbol: .
Radiated RF IEC61000-4-3	3V/m 80M to 2.5GHz	3V/m	
Note 1: From 80 MHz to 800 MHz, the higher frequency range applies. Note 2: These guidelines may not apply in all situations. Electromagnetic propagation is affected by absorption and reflection from structures, objects and people.			
a: Field strengths from fixed transmitters, such as base stations for radio (cellular/cordless) telephones and land mobile radios, amateur radio, AM and FM radio broadcast and TV broadcast cannot be predicted theoretically with accuracy. To assess the electromagnetic environment due to fixed RF transmitters, an electromagnetic site survey should be considered. If the measured field strength in the location in which the device is used exceeds the applicable RF compliance level above, the device should be observed to verify normal operation. If abnormal performance is observed, additional measures may be necessary, such as reorienting or relocating the device. b: Over the frequency ranges 150kHz to 80MHz, field strengths should be less than 3V/m.			

Recommended Separation Distances between Portable and Mobile RF, Communications Equipment and This Equipment			
The equipment is intended for use in an electromagnetic environment in which radiated RF disturbance are controlled. The customer or the user of the device can help prevent electromagnetic interference by maintaining a minimum distance between portable and mobile RF communications equipment (transmitters) and the device as recommended below, according to the maximum output power of the communication equipment.			
Rated Maximum Output power of Transmitter Watts (W)	**Separation Distance According to Frequency of Transmitter (m)**		
	150k to 80MHz $d = \left[\frac{3.5}{3}\right]\sqrt{P}$	80M to 800MHz $d = \left[\frac{3.5}{3}\right]\sqrt{P}$	800M to 2.5GHz $d = \left[\frac{7}{3}\right]\sqrt{P}$
0.01	0.12	0.12	0.23
0.1	0.37	0.37	0.74
1	1.17	1.17	2.34
10	3.69	3.69	7.38
100	11.67	11.67	23.34
For transmitters at a maximum output power not listed above, the recommended separation distanced in meters (m) can be determined using the equation applicable to the frequency of the transmitter, where P is the maximum output power rating of the transmitter in watts (W) according to the transmitter manufacturer. Note 1: From 80 MHz to 800 MHz, the separation distance for the higher frequency range applies. Note 2: These guidelines may not apply in all situations. Electromagnetic propagation is affected by absorption and reflection from structures, objects and people.			

C Alarm Messages and Prompt Information

C.1 Physiological Alarm Messages

Note: XX represents a parameter label, such as PR, SpO_2, NIBP, etc.The “L” field indicates the alarm level. H means high, M means medium and L means low.

Alarm message	L	Cause	Action
XX TOO HIGH	M	XX value exceeds the upper alarm limit.	Make sure the alarm limits are appropriate for the patient, and check the patient’s condition.
XX TOO LOW	M	XX value is lower than the lower alarm limit..	
NO PULSE	H	The pulse signal of the patient is so weak that the monitor cannot perform pulse analysis.	Check the connection of the sensor and the patient’s condition.

C.2 Technical Alarm Messages

Note: XX represents a parameter module such as NIBP or SpO_2, or a parameter label, such as PR and SpO_2. ## stands for patient category, i.e. adult, pediatric or neonate. The “A” field indicates whether all alarm indications can be cleared or not, and the “B” field indicates whether all alarm indications except the alarm message can be cleared or not. The “L” field indicates the alarm level: H means high, M means medium and L means low. “*” means the alarm level is user-adjustable.

C.2.1 General Alarm Messages of Parameter Modules

Alarm message	A	B	L	Cause	Action
XX INIT ERR N	Yes	No	H	An error occurs to the XX module during initialization.	Restart the monitor. If the problem persists, contact our service personnel for repair.
Note: N stands for error code.					
XX COMM STOP	No	No	H	Failure in communication between XX module and the main board.	
XX COMM ERROR	No	No	H	Failure in communication between XX module and the main board.	
XX ALM LMT ERR	No	No	H	The alarm limit of the XX parameter is changed inadvertently.	If the problem persists, contact our service personnel for repair.
XX EXCEED	No	No	H	The measured XX value exceeds the measurement range.	

C.2.2 NIBP Module Alarm Messages

Alarm message	A	B	L	Cause	Action
NIBP SELFTEST ERR	Yes	Yes	H	An error occurs during NIBP module initialization.	Select NIBP RESET in the MAINTAIN menu. If the problem still exists, contact our service personnel for repair.
NIBP INIT ERR	Yes	Yes	H	An error occurs during NIBP module initialization.	Restart the monitor. If the problem still exists, contact our service personnel for repair.

NIBP COMM ERR	Yes	Yes	H	Communication between NIBP module and the host fails.	Restart the monitor. If the problem still exists, contact our service personnel for repair.
LOOSE CUFF	No	Yes	L	The NIBP cuff is not properly connected.	Check the patient's condition and verify patient type. Replace with a appropriate cuff and connect it correctly. If the problem still exists, contact our service personnel for repair.
AIR LEAK	No	Yes	L	Leak in the airway.	
CUFF TYPE ERR	No	Yes	M		
PNEUMATIC LEAK	No	Yes	L		
AIR PRESSURE ERROR	No	Yes	L	Failures occur in the pulse measurement. The monitor cannot perform measurement, analysis, or calculation. 。	
NIBP WEAK SIGNAL	No	Yes	L		
SIGNAL SATURATED	No	Yes	L		
NIBP OVERRANGE	No	Yes	M		Check the patient's condition and verify patient type. Replace with a appropriate cuff and connect it correctly. If the problem still exists, contact our service personnel for repair.
EXCESSIVE MOTION	No	Yes	L	Excessive motion of the patient's arms	
OVER PRESSURE	No	Yes	M	The airway might be blocked.	
NIBP SYSTEM FAILURE	No	Yes	M	Failures occur in the pulse measurement. The monitor cannot perform measurement, analysis, or calculation.	
NIBP TIME OUT	No	Yes	M		
NIBP RESET ERROR	No	Yes	M	Illegal reset during NIBP measurement.	Check the airway and take measurements again. If the problem still exists, contact our service personnel for repair.

C.2.3 Mindray DS SpO_2 Module Alarm Messages

Alarm message	A	B	L	Cause	Action
SPO2 SENSOR OFF	No	Yes	*	The sensor is disconnected from the patient or the monitor.	Make sure that the sensor is placed at an appropriate position and the monitor is connected to cables correctly.
SPO2 LOW PERFUSION	No	No	L	The pulse signal is too weak.	Move the sensor to a site with better perfusion.
SPO2 NO SENSOR	No	Yes	L	SpO_2 sensor is detached from the patient or monitor, or SpO_2 sensor is not properly connected.	Disconnect SpO_2 sensor and reconnect it as per instructions for use. If the alarm persists, SpO_2 sensor or cable may be damaged.
				SpO_2 sensor is reversely connected	Disconnect SpO_2 sensor and reconnect it as per instructions for use. Pay attention to the mark on the sensor.

C.2.4 Masimo SpO_2 Module Alarm Messages

Alarm message	A	B	L	Cause	Action
SPO2 SENSOR OFF	No	Yes	*	The sensor is disconnected from the patient or the monitor.	Make sure that the sensor is placed at an appropriate position and the monitor is connected to cables correctly.
SPO2 PULSE SEARCH	No	No	L	The monitor is searching for the patient's pulse signal.	If the pulse reading is not displayed after 30 seconds, check if the sensor is properly connected to the patient. Change the sensor site for better signals if necessary.
SPO2 INTERFERENCE	No	No	L	The pulse signals are subject to great external interference.	Reduce or remove external interference.
SPO2 LOW PERFUSION	No	No	L	The pulse signal is too weak.	Move the sensor to a site with better perfusion.
SPO2 TOO MUCH LIGHT	No	No	L	Too much light on the sensor.	Turn down or off the lighting, move the sensor to a place of weaker light or cover the sensor.
UNKNOWN SPO2 SENSOR	No	No	L	The monitor cannot recognize the SpO_2 sensor type.	Check whether the type of the sensor is correct.
SPO2 BOARD FAULT	No	No	H	The SpO_2 board malfunctions and might not be able to measure the pulse signals correctly.	Stop using the SpO_2 module, and contact biomedical engineers or us for maintenance.
SPO2 SENSOR FAULT	No	No	H	The sensor is damaged.	Stop using the sensor.

SPO2 NO SENSOR	No	Yes	L	The sensor is disconnected from the patient or the monitor, or the sensor is not properly connected.	Disconnect and reconnect the sensor as directed by the instructions. If the alarm remains, the sensor or the cable might have been damaged.
				SpO_2 sensor is reversed.	Disconnect and reconnect the sensor as directed by the instructions. Pay attention to the mark on the sensor.
SPO2 WEAK SIGNAL	No	No	L	The pulse signals detected by the monitor are of poor quality.	Move the sensor to a site with better signals.
WRONG SPO2 SENSOR	No	No	L	The SpO_2 sensor is incompatible to the monitor, or is damaged.	Stop using the sensor.

C.2.5 Nellcor SpO_2 Module Alarm Messages

Alarm message	A	B	L	Cause	Action
SPO2 SENSOR OFF	No	Yes	*	The sensor is disconnected from the patient or the monitor.	Make sure that the sensor is placed at an appropriate position and the monitor is connected to cables correctly.
SPO2 NO SENSOR	No	Yes	L	The sensor is disconnected from the patient or the monitor, or the sensor is not connected properly.	Disconnect and reconnect the sensor as directed by the instructions. If the alarm remains, the sensor or the cable might have been damaged.
				SpO_2 sensor is reversed.	Disconnect and reconnect the sensor as directed by the instructions. Pay attention to the mark on the sensor.
SPO2 INTERFERENCE	No	No	L	The pulse signals are subject to great external interference.	Reduce or remove external interference.
SPO2 BOARD FAULT	No	No	H	The SpO_2 board malfunctions and might be unable to measure the pulse signals correctly.	Stop using the SpO_2 module, and contact biomedical engineers or us for maintenance.
SPO2 SENSOR FAULT	No	No	H	The sensor is damaged.	Stop using the sensor.
SPO2 WEAK SIGNAL	No	No	L	The SpO_2 signal is weak.	Change the sensor site for better signals.
SPO2 WEAK PULSE	No	No	L	The detected pulse signal is too weak.	

C.2.6 SmarTemp™ TEMP Module Alarm Messages

Alarm message	A	B	L	Cause	Action
WARMUP TIMED OUT	Yes	Yes	M	TEMP probe initial temperature is too high.	Cool the TEMP probe before taking measurement.
WARMING RESISTOR ERR	No	No	M	The warming resistor in the TEMP probe fails.	Replace the TEMP probe.
TEMP PROBE MISPLACED	Yes	Yes	M	TEMP probe is not placed in the sheath or the probe sheath is not in place.	1. Check that the probe sheath is in place. 2. Replace the TEMP probe in the sheath properly.
ENV TEMP OVERRANGE	No	Yes	M	The ambient temperature is beyond the measuring range.	Take measurement in proper working condition.
TEMP VOLTAGE ERR	No	Yes	M	Supply voltage is too high or too low.	Check the power supply.
TEMP NO PROBE	No	Yes	M	The TEMP probe is disconnected from the TEMP module.	Reconnect the probe with the TEMP module.
TEMP PREDICTION ERR	Yes	Yes	L	Improper temperature measurement	Take TEMP measurement again correctly.
TEMP SELFTEST ERR	No	No	H	An error occurs during the TEMP module initialization	Replace the TEMP module
TEMP PROBE OFF	No	Yes	L	TEMP probe does not contact with the patient.	Take measurement again after the probe warms up.
TEMP OVER HIGH LIMIT	No	No	H	The temperature measured is too high or measurement error	Lower the measured temperature or replace the TEMP module.
TEMP OVER LOW LIMIT	No	No	H	The temperature measured is too low or measurement error	Raise the measured temperature or replace the TEMP module.

Alarm message	A	B	L	Cause	Action
TEMP WRONG PROBE	No	No	H	A TEMP probe not supplied by our company is used.	Replace with a TEMP probe we supply.
TEMP COMM ERR	No	No	H	TEMP module is not available or TEMP module fails	Check if a TEMP module is available. If yes, replace the TEMP module.

C.2.7 Recorder Module Alarm Messages

Alarm message	A	B	L	Cause	Action
RECORDER INIT ERR N	Yes	No	M	An error occurs during the recorder initialization.	Contact the hospital's engineers or our Customer Service.
Note: N represents the error number.					
REC SELFTEST ERR	Yes	No	M	An error might occur to the RAM, ROM and CPU watchdog.	Restart the recorder. If the error remains, contact our service personnel for repair.
RECORDER VLT HIGH	No	No	H	A problem occurs to the system's power supply.	If this alarm message occurs frequently, contact our service personnel for repair.
RECORDER VLT LOW	No	No	H		
RECORDER HEAD HOT	No	No	H	The thermal head of the recorder is too hot.	Resume the recording after the recorder cools down completely. If the problem still exists, contact our service personnel for repair.
REC HEAD WRONG POS.	Yes	Yes	L	The thermal head of the recorder is in wrong position.	Restore the control lever of the recorder to its previous position.
REC OUT OF PAPER	Yes	Yes	L	The recorder paper is used up.	Replace with a new paper roll.

Alarm message	A	B	L	Cause	Action
RECORDER PAPER JAM	No	No	M	The recorder has recorded data on paper for 30m long or more.	Place the recorder correctly and try again.
RECORDER COMM ERR	Yes	No	M	Error in recorder communication.	Clear recording tasks and restart the monitor. If the problem remains, contact our service personnel for repair.
TOO MANY REC TASKS	No	No	M	Too many alarm events occur at the same time.	
RECORDER PAPER W.P.	Yes	Yes	M	The paper roll of the recorder is not placed in the correct position.	Place the paper roll correctly.
REC S. COMM ERR	Yes	No	M	Error in recorder communication.	Clear recording tasks and restart the monitor. If the problem remains, contact our service personnel for repair.
REC NOT AVAILABLE	No	No	M	Error in the recorder work mode.	

C.2.8 System Alarm Messages

Alarm message	A	B	L	Cause	Action
REAL CLOCK NEED SET	No	No	H	The system time is incorrect.	Reset the system time and then restart the monitor.
REAL CLK NOT EXIST	No	No	H	There is no button battery, or the battery power is depleted.	Install a button battery or replace with a new one.
NET INIT ERR (G.)	No	No	M	The monitor cannot be connected to the network due to network problem.	Contact our service personnel for repair.
NET INIT ERR (Ram)	No	No	M		
NET INIT ERR (Reg)	No	No	M		
NET ERR (Run 1)	No	No	M		
NET ERR (Run 2)	No	No	M		
12V TOO HIGH	No	No	H	A problem occurs to the system's power supply.	If this alarm message occurs frequently, contact our service personnel for repair.
12V TOO LOW	No	No	H		
BATTERY TOO LOW	No	No	H	The battery voltage is too low.	Connect the monitor to AC mains to charge the battery.
DATAOUT FAIL	Yes	Yes	M	A failure occurs in data transmission during the data output.	Re-output the data.
NET ERROR	Yes	Yes	M	The monitor is not connected to the network	Check the network connection.
BARCODE ID FAILED	Yes	No	L	Bar code format cannot be decoded.	Enter patient ID manually or use a decodable bar code.

C.3 Prompt Messages

Prompt message	Cause	Action
SEARCH PULSE	The SpO_2 module is searching the pulse.	Wait till the end of the search.
SPO2 MOTION	SpO_2 sensor is moving.	Eliminate sensor movement.
SPO2 Alarm Disabled	SpO_2 alarm is switched off.	Switch on SpO_2 alarm.
RECORDER BUSY	The recorder is recording data.	Wait till the end of the recording.
Manual measure...	The NIBP module is performing a manual measurement.	Wait till the end of the measurement.
Cont measuring...	The NIBP module is performing a continuous measurement.	
Auto measuring...	The NIBP module is performing an automatic measurement.	
NIBP Alarm Disabled	NIBP alarm is switched off.	Switch on NIBP alarm.
Resetting…	Module is resetting.	Wait till resetting is finished.
Please start	The interval for automatic measurement has been selected.	Press to start the measurement.
Calibrating...	The NIBP module is being calibrated.	Wait till the end of the calibration.
Calibration over	The calibration is finished.	None
Testing leak...	The NIBP module is testing for air leakage.	Wait till the end of test.
Pneum test over	The test for air leakage is finished.	None
Measurement over	is pressed during measurement to stop NIBP measurement.	None
Reset failed	The NIBP module fails to be reset.	None
TEMP Warming Up	TEMP module is warming up.	Wait till TEMP module completes warmup.
TEMP Prediction Ready	TEMP module completes warming up and predictive measurement can be performed now.	Perform predictive TEMP measurement.

TEMP Prediction Over	TEMP predictive measurement is finished.	Check TEMP reading.
TEMP Measure Over	TEMP monitoring is over	Remove the TEMP probe from patient and insert it in the probe sheath.
OUTPUTTING...	Data are being output.	None
CONNECTING...	The monitor is connecting to the PC software.	None
OUTPUT SUCCESS!	Data output is finished.	None
Server not exist	Sever is not installed.	Install the server.
AUDIO ALARM OFF	The alarm volume is set to 0.	Exit the audio alarm off status.
ALARM OFF	The SILENCE button is shortly pressed.	Wait till alarm pause time is reached or shortly press the SILENCE button again.
CONFIGURATION RESTORED	Last configuration is loaded successfully.	None
FACTORY ## CONFIG LOADED	## factory configuration is loaded sucessfully.	None
USER ## CONFIG LOADED	## user configuration is loaded sucessfully.	None

FOR YOUR NOTES

D Factory Defaults

This section lists the most important factory default settings. These settings are not user-adjustable. You can restore the factory default settings if necessary.

Note: Column A indicates whether the item is affected by factory or user configuration.
“ √ ” represents that this item is affected by the configuration and user configuration will be loaded first when the monitor is restarted; if the user configuration is unavailable, factory configuration will be loaded.
“ × ” represents that this item is not affected by the configuration; the settings changed by the user maintain when the monitor is powered off and will be loaded when the monitor is restarted.

D.1 Patient Information

Patient Information	**A**	**Factory Default Settings**
PATIENT TYPE	×	ADU

D.2 System Setup

System Setup	A	Factory Default Settings
ALARM VOL	√	2
KEY VOL	√	2
PULSE VOL	√	2
LCD BRIGHT	×	5
LCD CONTRAST	×	5
NIBP UNIT	√	mmHg
TEMP TYPE	×	PREDICT
TEMP POSITION	×	ORAL
TEMP UNIT	√	℃
NET TYPE	×	CMS+
LOCAL NET NO.	×	1
IP ADDRESS	×	196.16.0.1
DATE FORMAT	×	DD-MM-YYYY
System date and time	×	0:0:0, 2005-01-01
QUICK ADMIT	×	ON
SPO2 SENSOR OFF	×	LOW
AUDIO OFF PROMPT	×	ON
MIN ALARM VOL	×	2
SELECT CONFIG	×	LAST CONFIG
BARCODE POWER	×	ON
LANGUAGE	×	ENGLISH
SIGNAL DURATION	×	CONTINUUM
SIGNAL TYPE	×	NORMAL OPEN
INTERVAL	√	MANUAL
REVIEW MODE	×	ALL
DELETE	×	Unselected, current trend data.

D.3 Alarm Limit

Mindray DS SpO_2	**A**	**Adult**	**Pediatric**	**Neonate**
SpO_2 HI	√	100	100	95
SpO_2 LO	√	90	90	90
PR HI	√	120	160	200
PR LO	√	50	75	100
Masimo SpO_2	**A**	**Adult**	**Pediatric**	**Neonate**
SpO_2 HI	√	100	100	95
SpO_2 LO	√	90	90	90
PR HI	√	120	160	200
PR LO	√	50	75	100
Nellcor SpO_2	**A**	**Adult**	**Pediatric**	**Neonate**
SpO_2 HI	√	100	100	95
SpO_2 LO	√	90	90	90
PR HI	√	120	160	200
PR LO	√	50	75	100
NIBP	**A**	**Adult**	**Pediatric**	**Neonate**
SYS HI	√	160	120	90
SYS LO	√	90	70	40
MEAN HI	√	110	90	70
MEAN LO	√	60	50	25
DIA HI	√	90	70	60
DIA LO	√	50	40	20
PR HI	√	120	160	200
PR LO	√	50	75	100

FOR YOUR NOTES

E Symbols and Abbreviation

E.1 Units

A	ampere
Ah	ampere hour
bpm	beats per minute
℃	centigrade
cm	centimeter
dB	decibel
℉	fahrenheit
g	gram
hr	hour
Hz	hertz
inch	inch
k	kilo
kg	kilogram
kPa	kilopascal
l	litre
lb	pound
m	meter
mg	milligrams
min	minute
ml	milliliter
mm	millimeters
mmHg	millimeters of mercury
ms	millisecond
mV	millivolt
mW	milliwatt

nm	nanometer
s	second
V	volt
VA	volt ampere
Ω	ohm
μA	microampere
μm	micron
μV	microvolt
W	watt

E.2 Symbols

-	minus
%	percent
/	per； divide； or
～	to
^	power
＋	plus
＝	equal to
＜	less than
＞	greater than
≤	less than or equal to
≥	greater than or equal to
±	plus or minus
×	multiply
©	copyright

E.3 Abbreviations

AAMI	Association for Advancement of Medical Instrumentation
AC	alternating current
ADT	adult
ANSI	American National Standard Institute
AUX	Auxiliary output
BTPS	Body temperature and pressure， Saturated
CH	channel
CISPR	International Special Committee on Radio Interference
CMS	central monitoring system
cmos	Complementary Metal Oxide Semiconductor
CPU	central processing unit
DC	direct current
D， DIA	diastolic
EEC	European Economic Community
EMC	electromagnetic compatibility
err	error
fpga	Field Programmable Gate Array
Hb-CO	Carbonmonoxide hemoglobin
HT	height
IEC	International Electrotechnical Commission
ISO	International organization for standardization
LED	light emitting diode
Loop	loop read-write test fail
M， MAP	Mean arterial pressure
MDD	Medical Device Directive
MetHb	methemoglobin
Mii	initialize MII registers fail

MRI	magnetic resonance imaging
N/A	not applied
NIBP	noninvasive blood pressure
ND	
NM	——
NS	
oxyCRG	Oxygen Cardio-respirogram
P	power
PD	photodetector
PLETH	plethysmogram
PR	pulse rate
RAM	random access memory
Reg	test NE2000 registers fail
ROM	read-only memory
SpO_2	arterial oxygen saturation from pulse oximetry
S， SYS	systolic pressure
TEMP	temperature
VGA	Video Graphic Array

Mindray DS USA, Inc.
800 MacArthur Blvd.
Mahwah, New Jersey 07430
USA
Tel 1.800.288.2121
Tel 1.201.995.8000

www.mindray.com

P/N: 046-000178-00 (3.0)